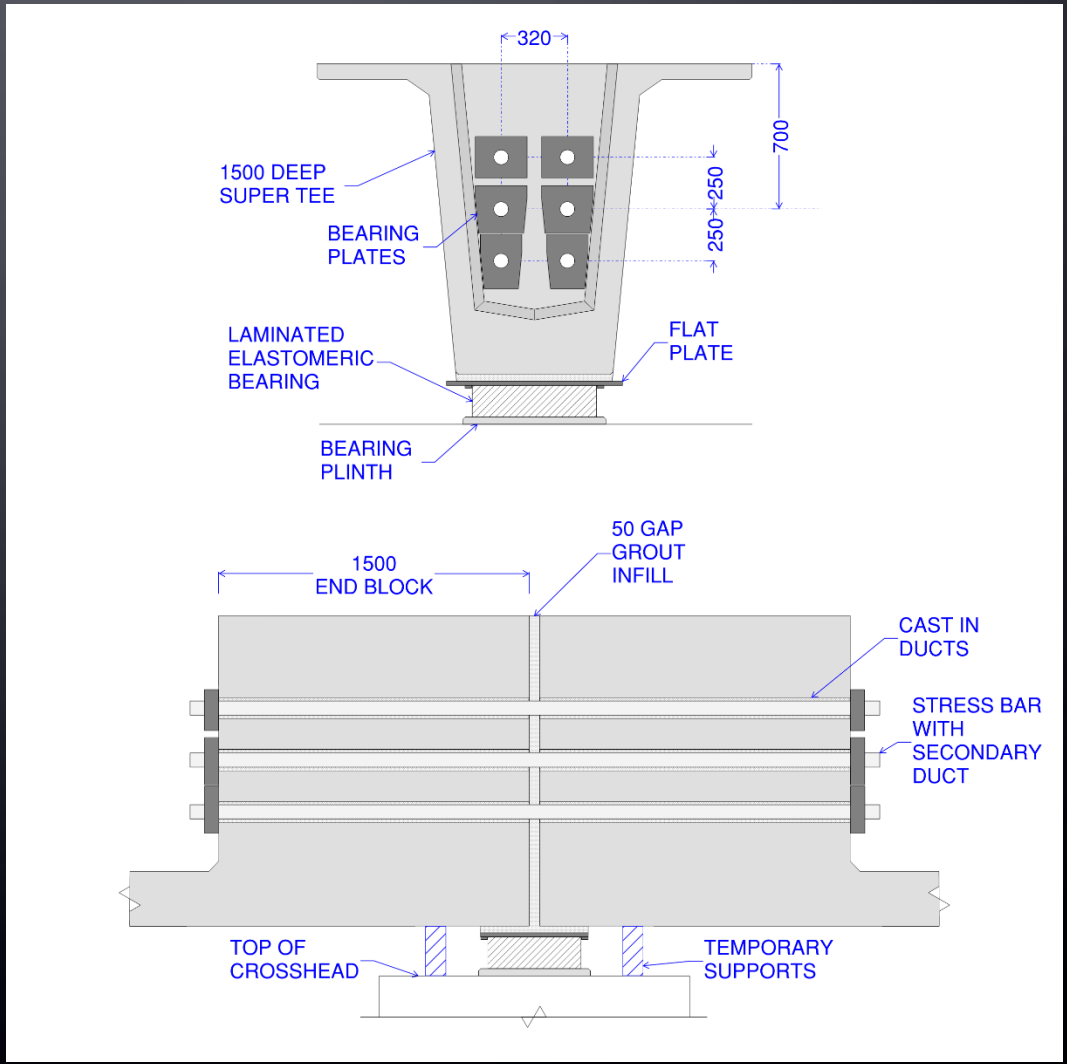

David Molloy – BG&E

A New Post-Tensioned Continuity Detail for Super Tees

Why Use a Continuous Superstructure?

- Originally to eliminate joints – reduce maintenance
- In Australia link slabs are common to eliminate joints
- Allow for a reduced structural depth:
  - More efficient moment distribution
  - Lower deflections

PCA Research

- The Portland Cement Association researched continuous bridges with precast, prestressed girders in the 1960s
- Continuity is limited by cracking in the joint over the pier
- Positive moments occur due to restraint of creep and shrinkage deflections

Restraint Moments

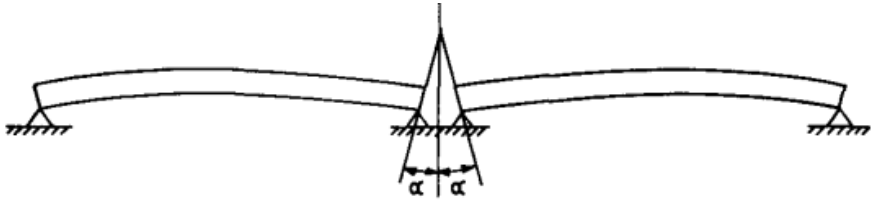

(a.) Initial Deformation.

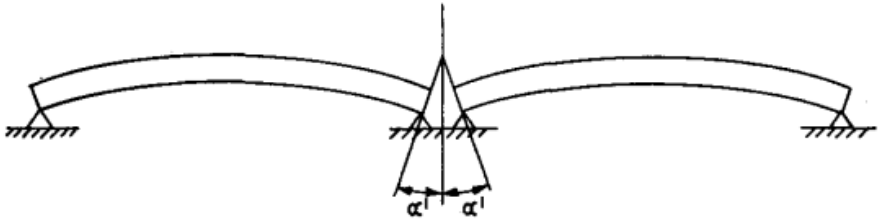

(b.) Final Deformation if left as Two Simple Spans.

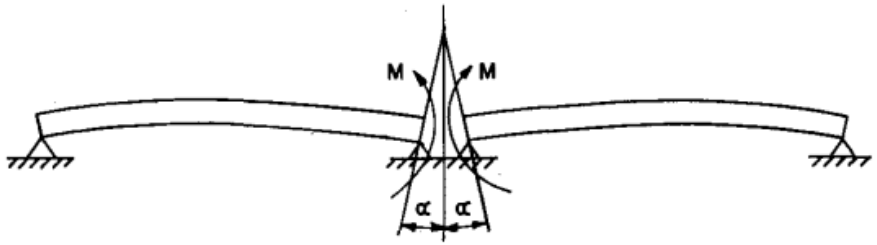

(c.) Final Deformation and Restraint Moment if Spans are made Continuous after Prestressing.

Continuity Types

- Cast in Situ Stitch
- Full Length Post Tensioned
- Partial Post Tensioned

Cast in Situ Stitch

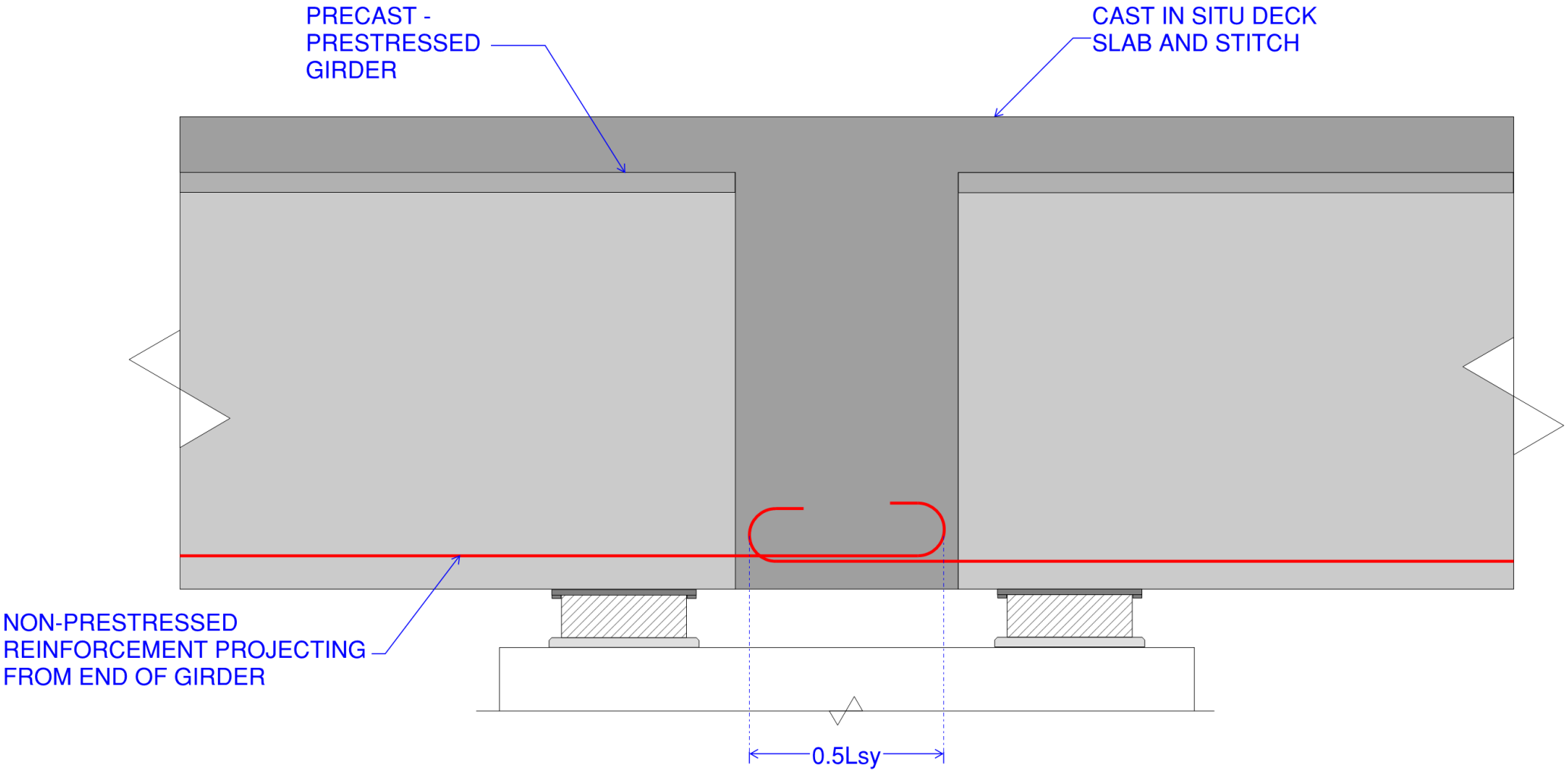

Full Length Post Tensioned

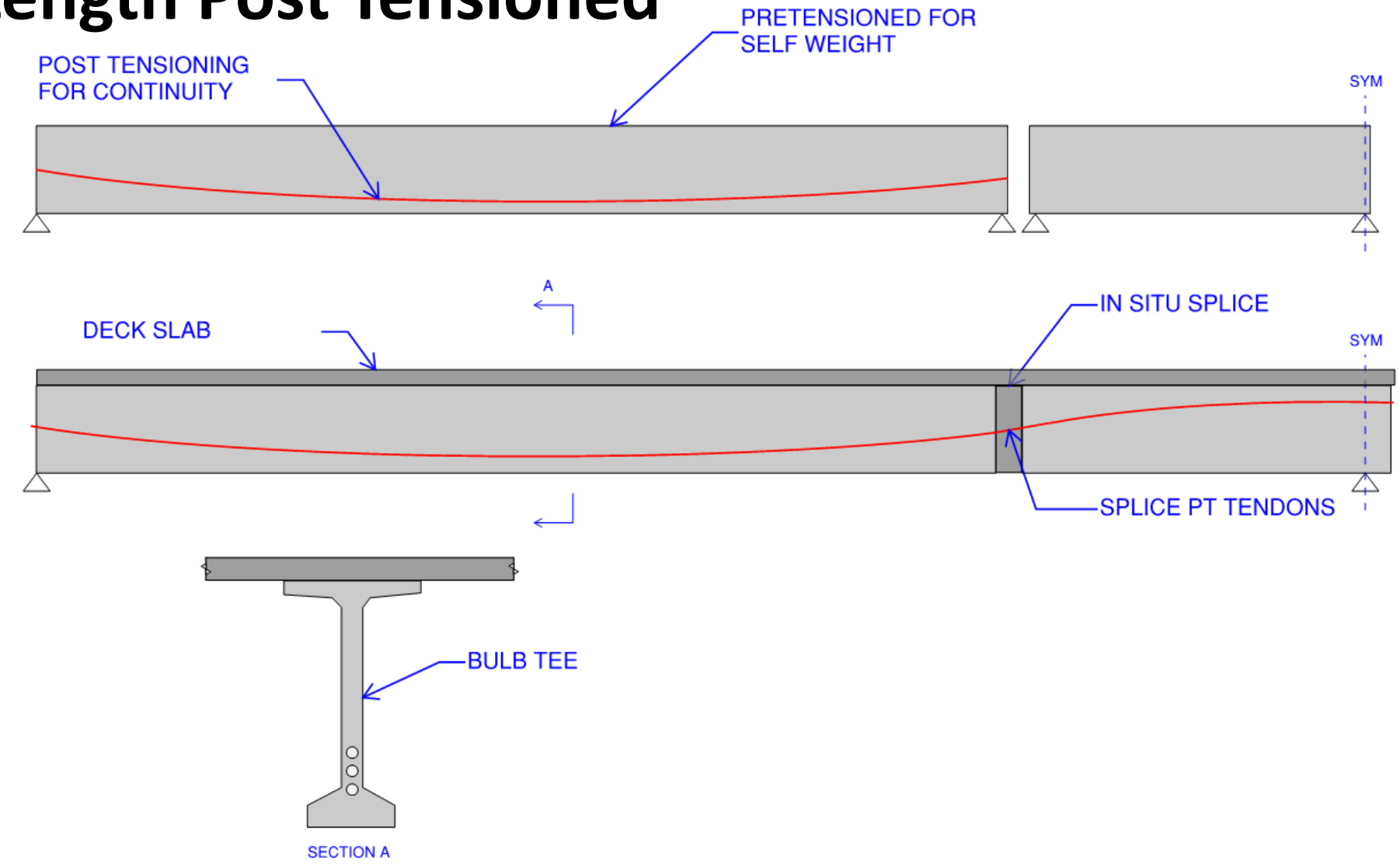

Partial Post Tensioned

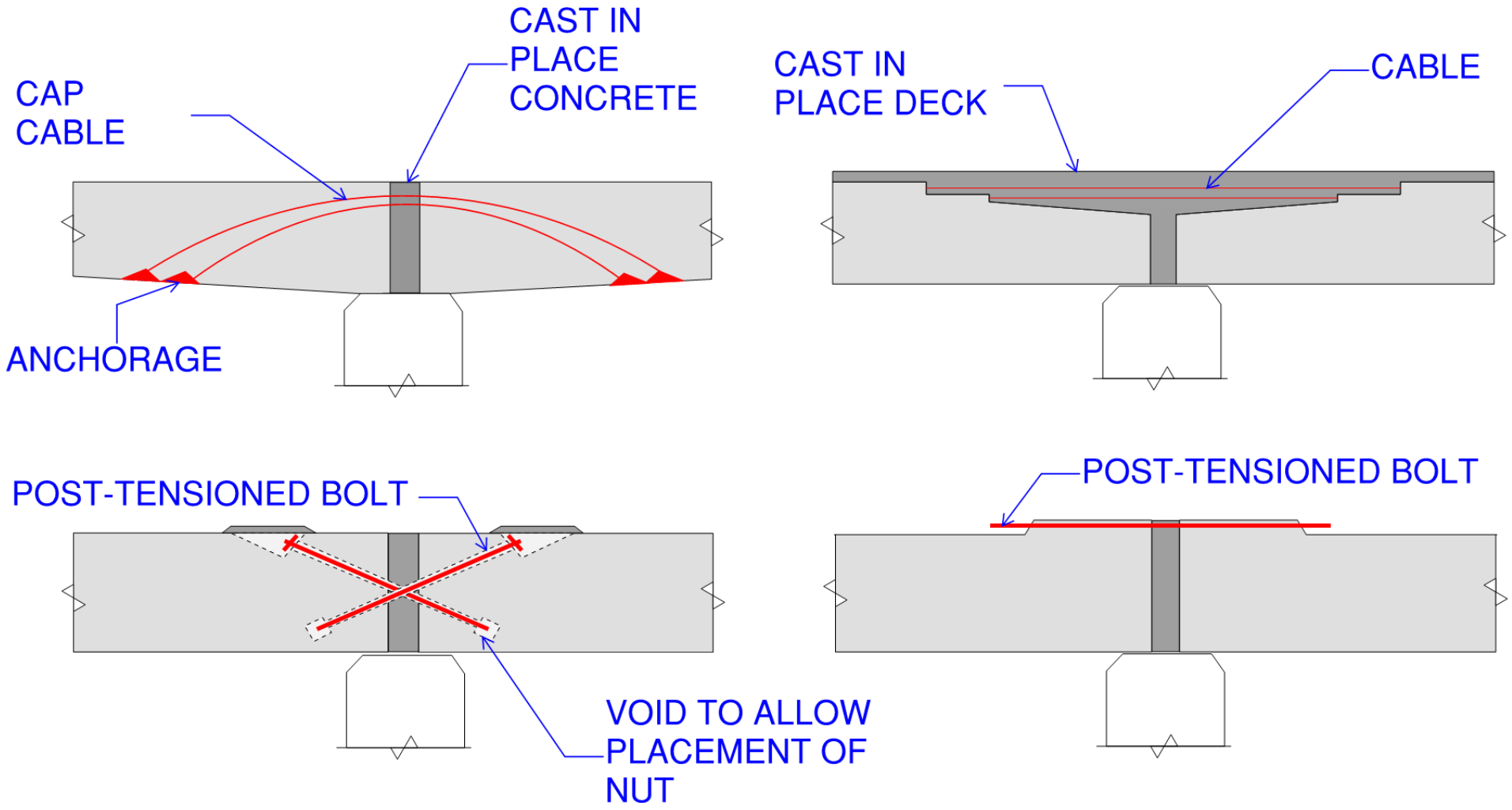

Partial Post Tensioned

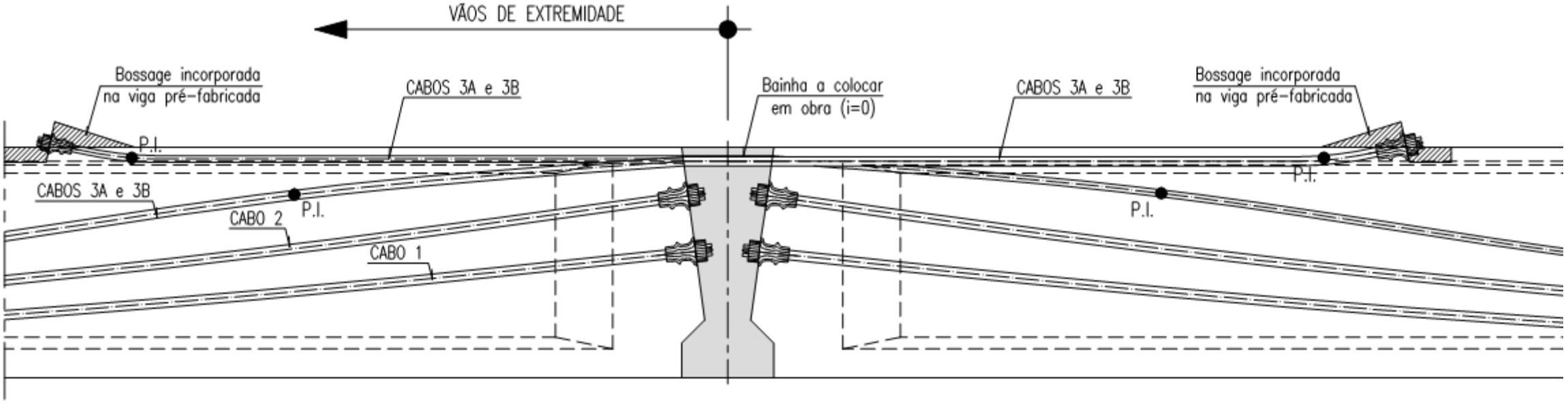

Melton Highway Bridge

- Melton Highway Level Crossing Upgrade:
  - Designer – SMEC
  - Contractor – BMD
  - Client – Level Crossing Removal Authority (LXRA)
  - Authorities
    - Owner – VicRoads
    - Stakeholder – Metro Trains Melbourne (MTM)


SUNBURY/BENDIGO LINE
MELTON HIGHWAY BRIDGE
MELTON HIGHWAY
Diggers Rest
Bulla
Greenvale
Roxburgh Park
Epping
South Morang
Coolaroo
Campbellfield
Greensborough
Bundoora
St Albans
Caroline Springs
Essendon
Preston
Heidelberg
Templest
Maribyrnong
Sunshine
Derrimut
Ravenhall
Sunshine West
Footscray
Melbourne
Southbank
Tarneit
Truganina
Williams Landing
Laverton
Hoppers Crossing
Altona
Altona Meadows
Williamstown
St Kilda
Malvern East
Wyndham Vale

General Arrangement

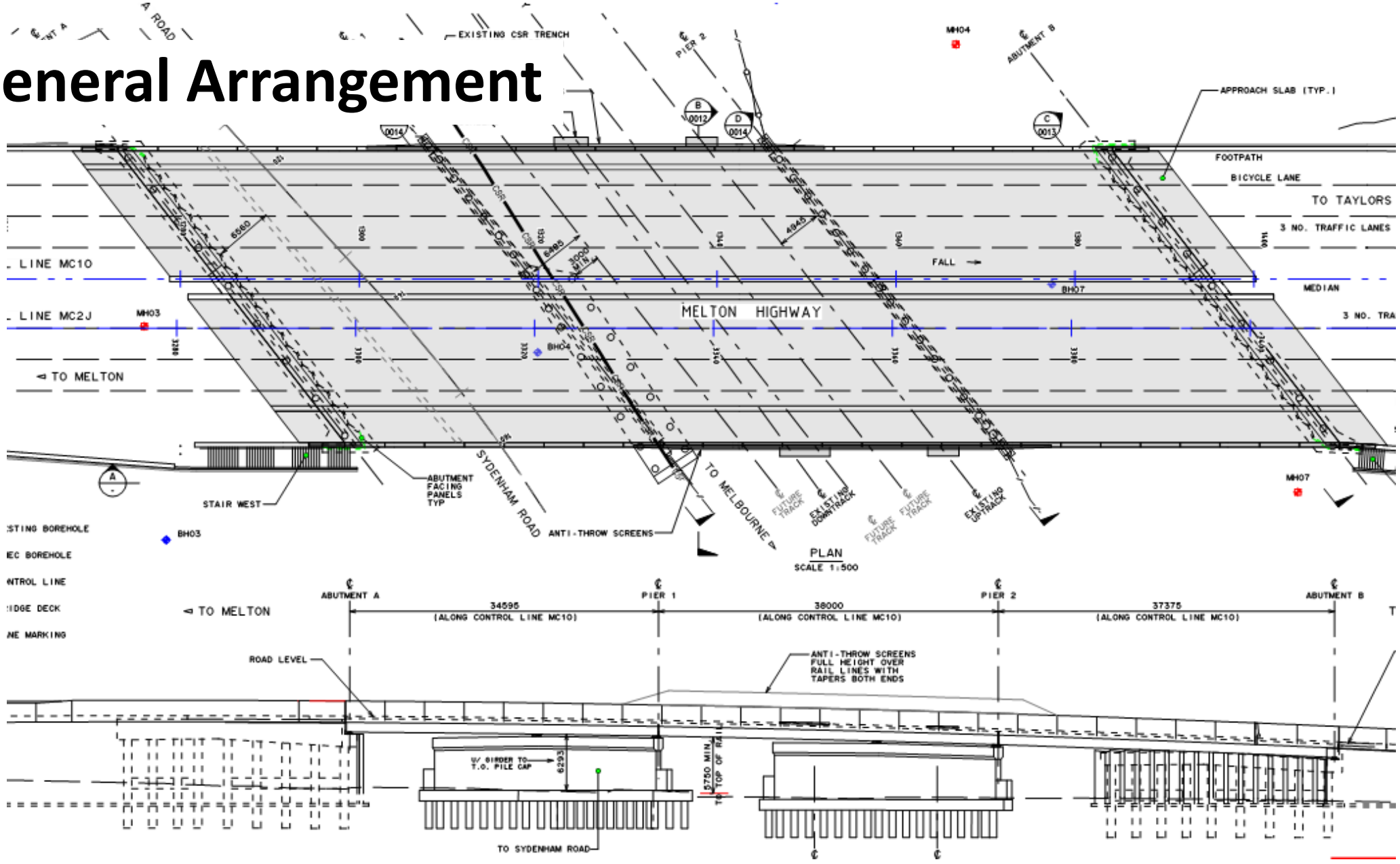

Joint Detail

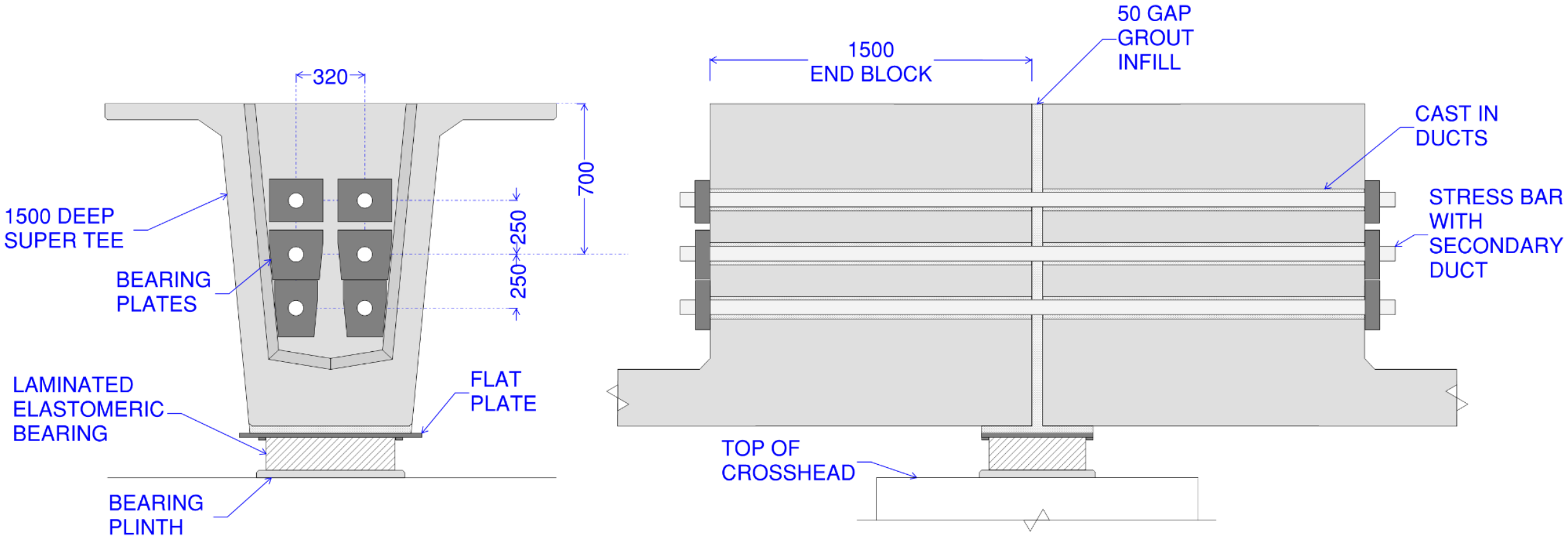

Construction Sequence

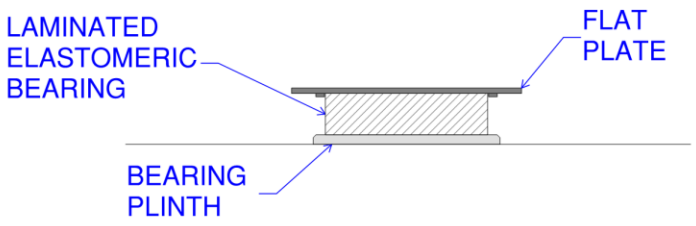

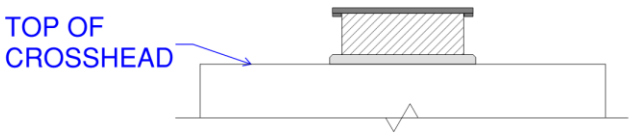

Construction Sequence

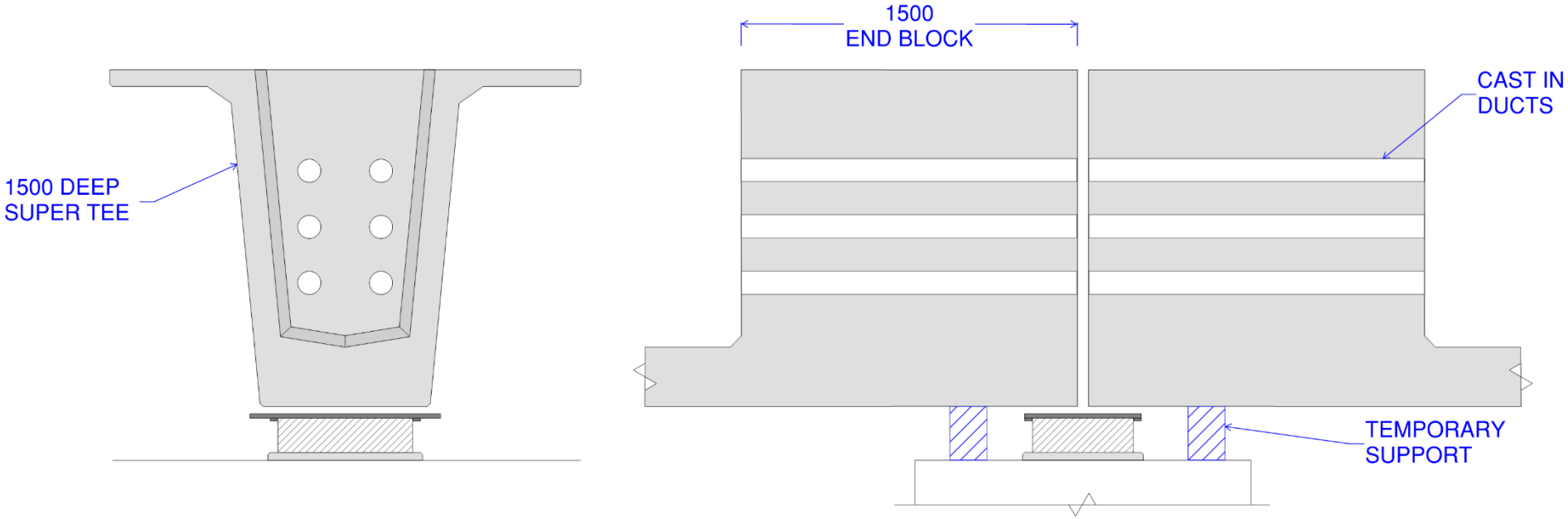

Construction Sequence

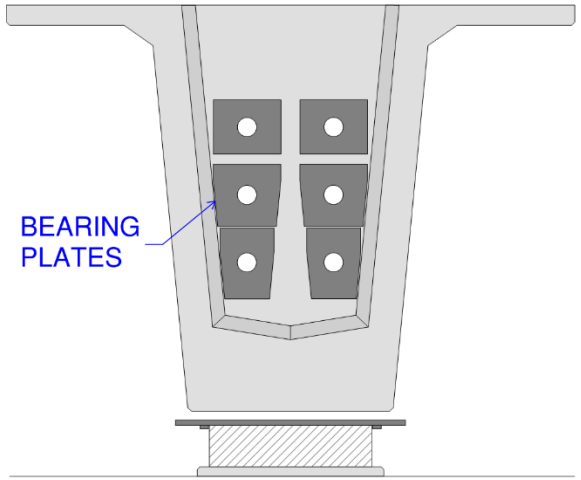

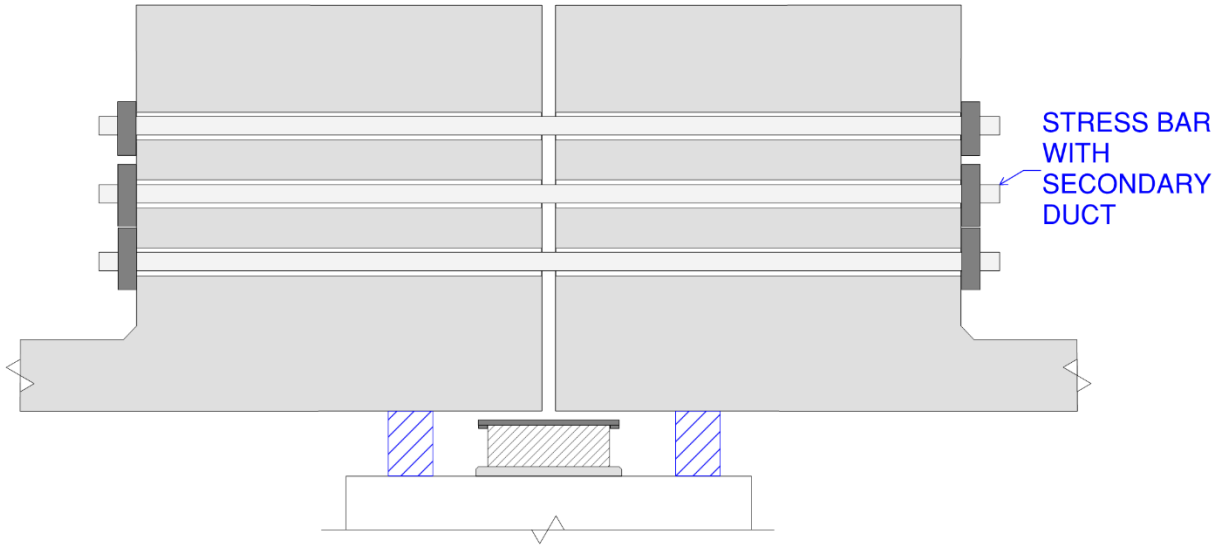

Construction Sequence

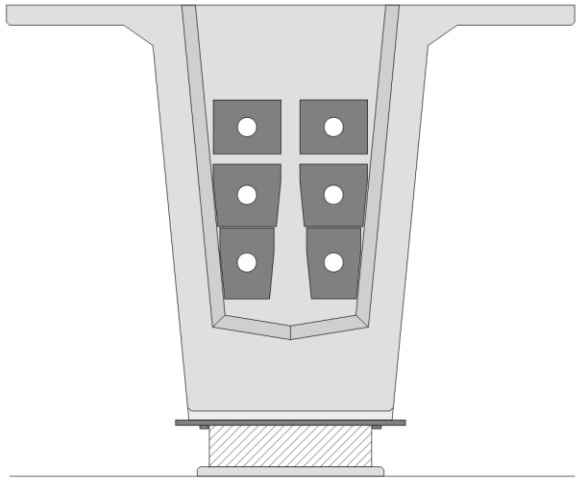

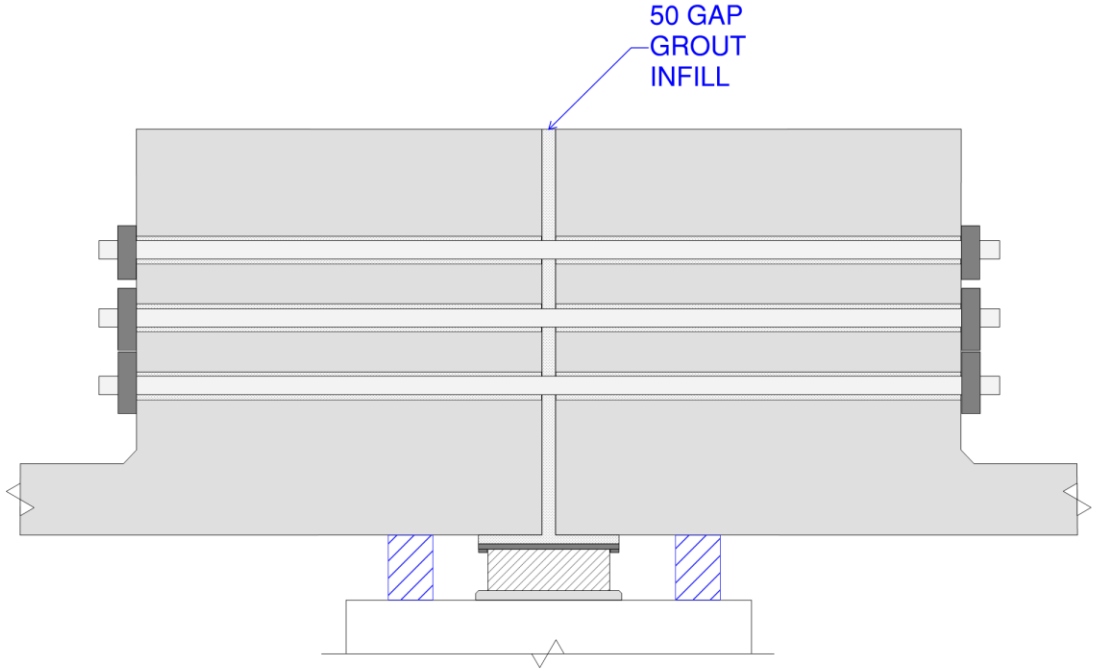

Construction Sequence

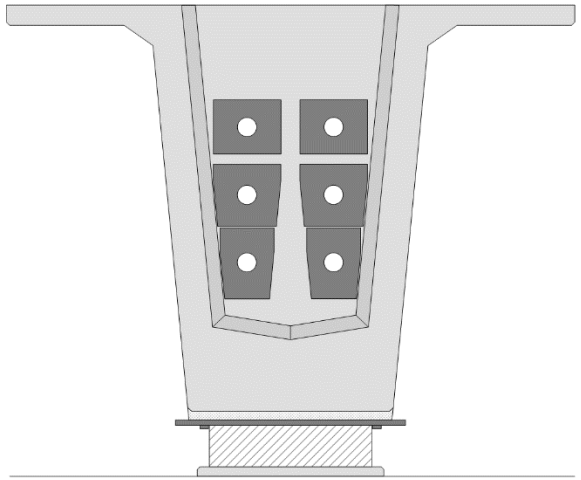

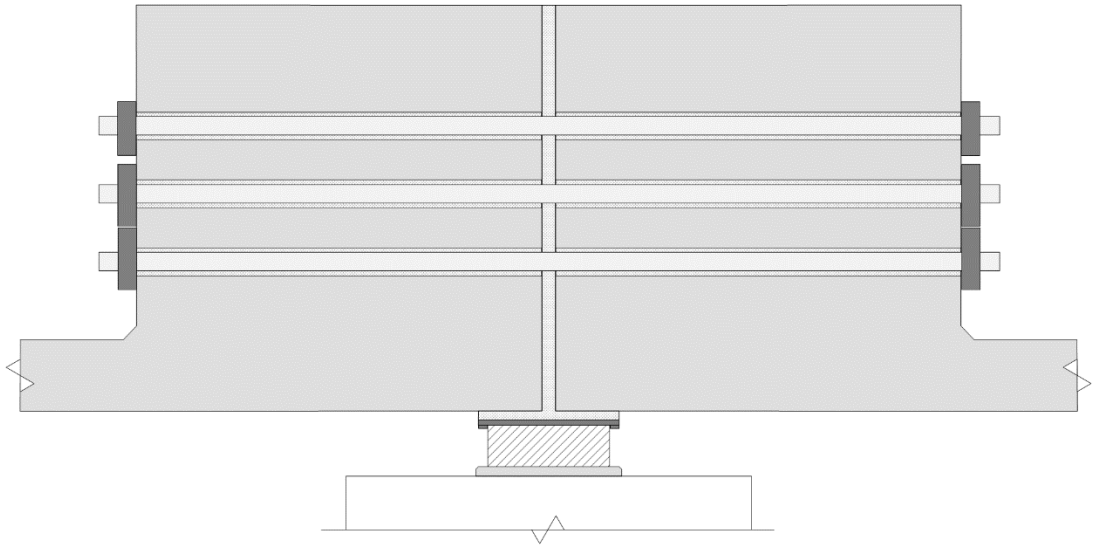

Photos

End block with ducts extending

Loose fit stress bars

Photos

Grouting gap

Stressing

Joint Detail

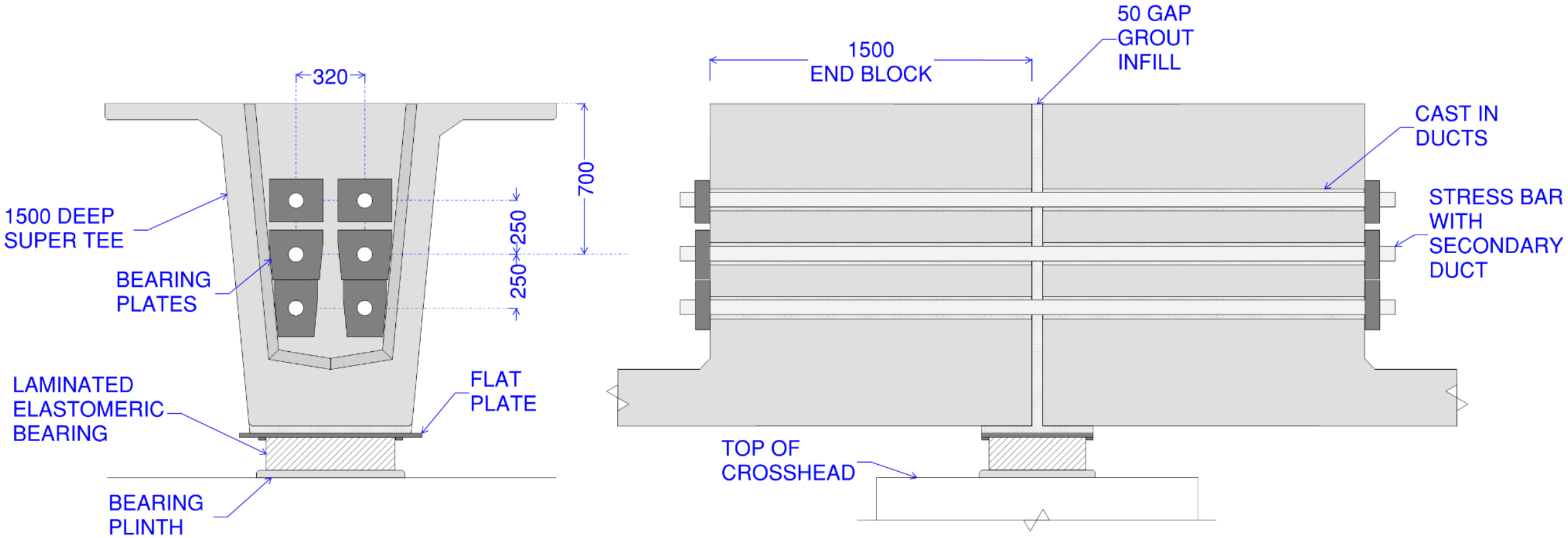

Bearing Plates

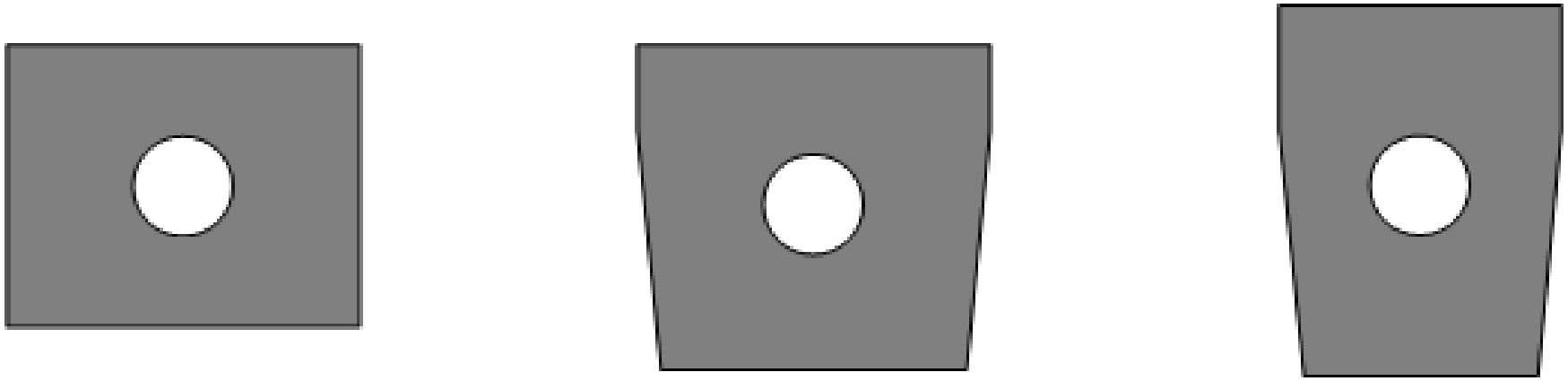

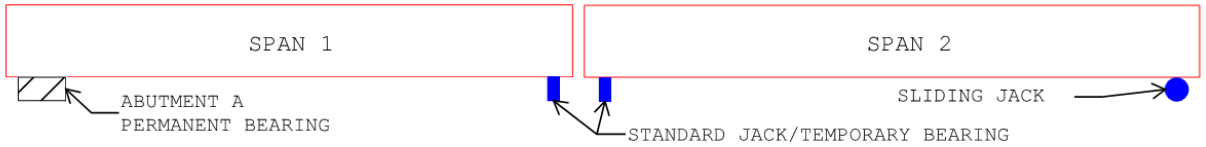

STAGE 1: INSTALL SPAN 1 AND 2 GIRDERS (SPAN 2 FIRST TO SET 50mm GAP)

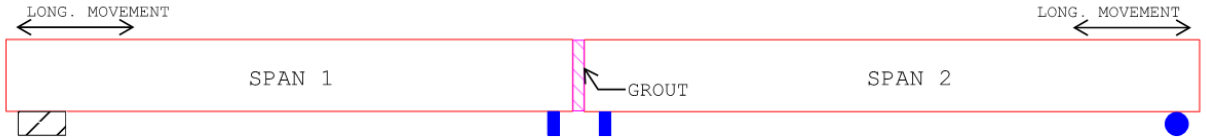

STAGE 2: GROUT OVER PIER 1, FREE ENDS OF GIRDERS CAN MOVE LONGITUDINALLY

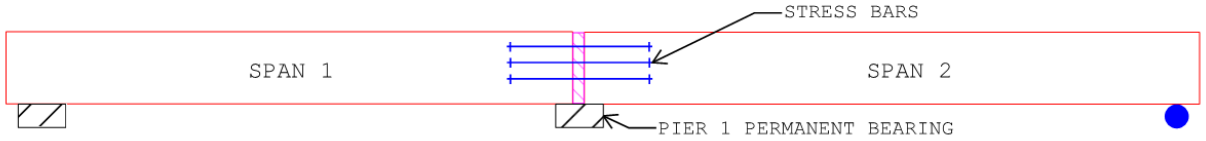

STAGE 3: AFTER GROUT REACHES 50MPa POST TENSION PIER 1 JOINT AND TRANSFER TO PIER 1 BEARING

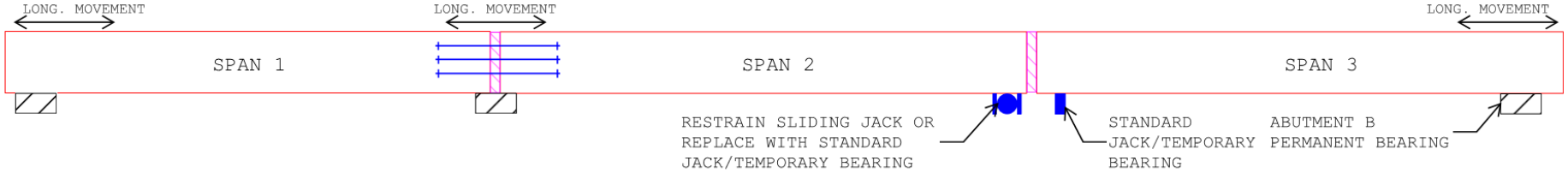

STAGE 4: INSTALL SPAN 3 AND GROUT OVER PIER 2
(NOTE: SPAN 3 GIRDER CAN BE INSTALLED AT ANY TIME BEFORE STAGE 4 BUT GROUTING MUST BE AFTER STAGE 3)

STAGE 5: AFTER GROUT REACHES 50MPa POST TENSION PIER 2 JOINT AND TRANSFER TO PIER 2 BEARING

Code Issues

AS5100.5-2017 Clause 8.10.10.3.3.2 *"Positive moment connection at supports"*

"In addition to those positive moments due to live load, support settlement and thermal effects, positive moments can develop due to the combined effects of differential creep and shrinkage. Where positive moments occur at supports, fully anchored non-prestressed longitudinal reinforcement shall be cast into the ends of the precast beams to permit the connection of the bottom flanges of adjoining beams at supports."

Conclusion

- No falsework required;
- Narrow stitch reduces the width of crosshead required;
- Single bearing reduces the width of crosshead required;
- High early strength grout means stressing can be completed quickly; and
- All stressing work can be done from the top of the girder, without a rail occupation.

Acknowledgement

We would like to acknowledge SMEC’s role as lead designers. BMD’s role as the contractor. Westcon’s role fabricating the girders and providing feedback and advice on constructability of the end block and post tension details. Clifton’s role in erecting the girders and providing constructability feedback. LXRA, VicRoads and MTM’s roles as the client and road and rail authorities, providing comments on the design. BECA’s role as the proof engineer.