CityLink Tulla Widening – Bulla Road to Power Street

Dr. Kabir Patoary, BScEng(Hon) MEng PhD MIEAust CPEng NER RPEQ
Principal Bridge Engineer, GHD

ABSTRACT

The City Link and Tullamarine Freeway corridor between Melbourne CBD and airport is one of the most heavily trafficked roads in Melbourne carrying approximately 210,000 vehicles per day. The City Link Tulla Widening (CTW) is a $1.28 billion infrastructure project, jointly funded by the Commonwealth, Victorian government and Transurban, designed to increase capacity, reduce travel times and improve safety on City Link and Tullamarine Freeway.

Aurecon-GHD Joint Venture, the design consultant for CPB Contractors delivering approximately 19 kilometers of freeway upgrade from Bulla Road to Power Street section under the design and construct contract to incorporates additional lanes and other measures to improve the flow of traffic. The structural works of the project covers widening of existing freeway bridges and elevated structures, new road bridges, pier and gantry protection barriers, ITS gantries for new freeway management system and significant length of noise and retaining walls.

This paper will provide an overview of the major bridge structures along with various engineering and construction challenges presented by this true brown field infrastructure project and various design innovations, which have resulted in construction cost and time savings and reduced maintenance requirements. The construction of the project started in October 2015 and is expected to be completed by end of 2017.

INTRODUCTION

The City Link Tulla Widening project covers a 24 km section of three of Melbourne's busiest road corridors including the western section of the City Link tollway, Tullamarine and Westgate Freeways. The project aims to increase capacity by up to 30 percent, reduce travel times and improve safety. The project is delivered under two separate Design and Construct contracts as shown in Table 1 and Figure 1; the VicRoads managed section from Melbourne Airport to Bulla Road and the Transurban managed section from Bulla Road to Power Street.

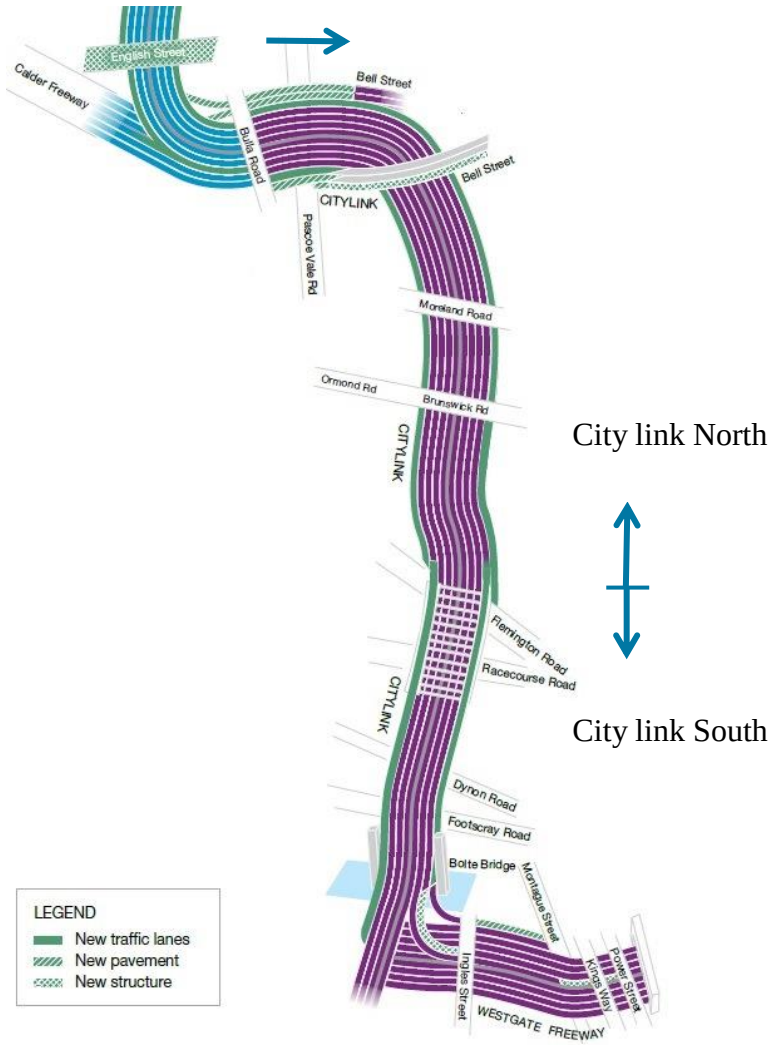

Figure 1 – Schematic CTW Sections

Table 1: Project Sections

Section	Scope	Nature of works	Delivered by
State works	From Bulla Rd north to Melrose Dr (non-CityLink concession area)	Widening – extra lane north and south	VicRoads
CityLink northern works	Between Bulla Rd and Flemington Rd	Widening – extra lane(s) north and south	Transurban
CityLink southern works	Between Flemington Rd and West Gate Freeway on WesternLink and on the West Gate Freeway between Bolte Bridge and the Burnley Tunnel east bound	Widening on WesternLink – extra lane north and south. Bolte Bridge exit ramp to Burnley Tunnel widening and reconfiguration of traffic flows on the West Gate Freeway to the Burnley Tunnel	Transurban

In early 2015, CPB Contractors were awarded the contract to deliver the Bulla Road to Power Street section of the project delivered by Transurban with Aurecon GHD Joint Venture engaged as design consultants. Construction works for the project commenced in

October 2015 and is expected to be complete by the end of 2017. The overall scope of Bridge and Structural works include:

- Structural design of three new bridges:
    - Bulla Road southbound entry ramp over the Collector Distributor
    - Pascoe Vale Road over Western Link
    - Mt Alexander Road over Moonee Ponds Creek

- Structural design of the widening or modification of 8 existing bridges:
    - Bulla Road Bridge North Abutment Modification
    - Western Link over Pascoe Vale Road
    - Moonee Ponds Creek Bridges 1,2,4 and 6
    - Citylink southbound ramp to power street and Burnley tunnel (Ramp Z)
    - West Gate Freeway eastbound elevated structure

- Structural design of the extension of the Wheeler Street Underpass
- Pier and/or abutment protection works on 15 existing bridges:
- Structural design of new gantries and modifications to existing gantries
- Design of retaining walls including soil nail walls, soldier pile walls and post and panel walls
- Design of new noise walls and adjustments to existing noise walls

This paper will briefly discuss the structural solution adopted together with various engineering and construction challenges for each of major new bridges and widening/modification of existing Bridges.

BULLA ROAD SOUTHBOUND ENTRY RAMP OVER THE COLLECTOR DISTRIBUTOR

General

New Bulla Road Bridge over collector distributor (CD) is a highly skewed (approximately 65 degrees at the west abutment and 67 degrees at the east abutment) single span bridge crossing over two lanes of CD road. The bridge is located on a horizontal and vertical curve with superelevation. Abutments are also not parallel due to the horizontal curve of the CD Road below. Figure 2 below shows the General arrangement of the bridge.

The superstructure consists of 7 no. splayed 1500 mm deep super-T girders with varying span between 32.5 m and 34.5 m. Super-T girders are simply supported on circular elastomeric bearings and skewed ends of girders have been limited to 25 degrees to avoid spalling of acute corners. Minimum 180 mm thick cast in-situ deck slab with in-situ diaphragms due to high skew and 60mm asphalt. XJS type expansion joints at deck ends. Medium containment full-height precast barriers are connected to the bridge deck via in-situ kerbs.

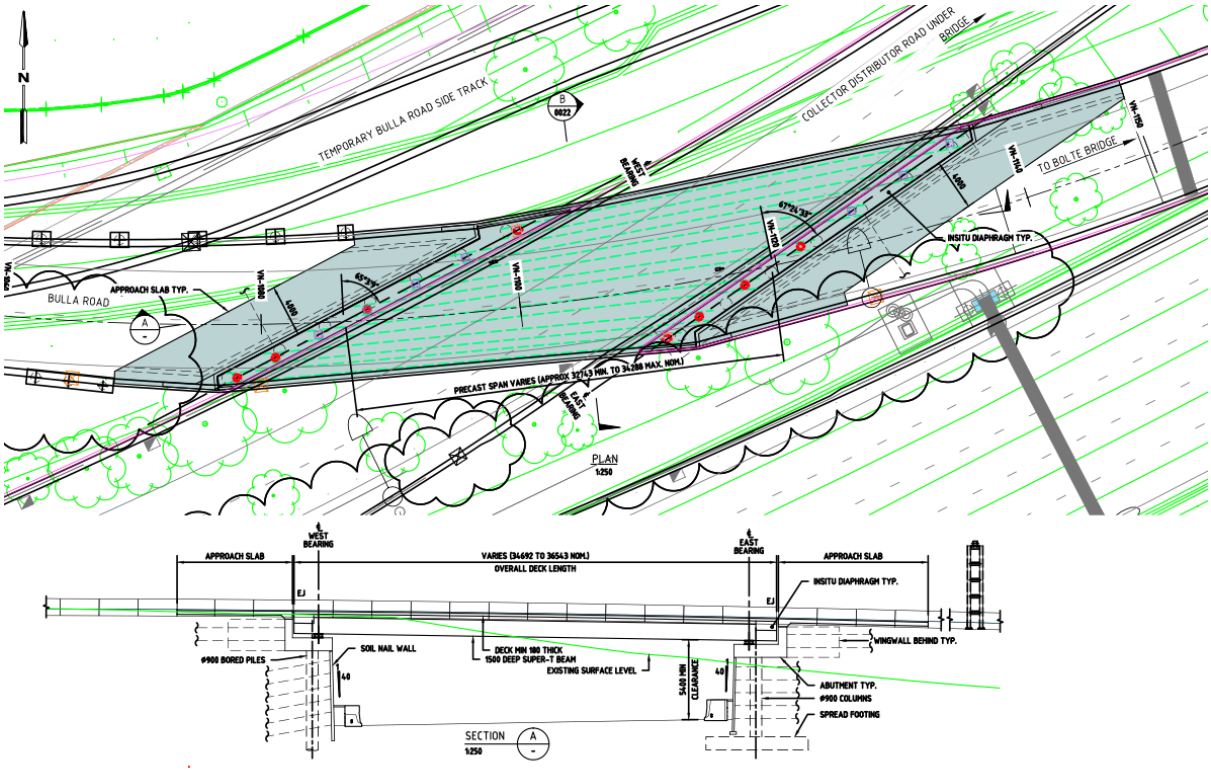

Figure 2 –General arrangement of the bridge

Substructure consists of 1000mm deep reinforced concrete abutment sill beams supported on 900mm diameter bored piles with rock sockets (west abutment) and 900mm diameter columns extending down into a spread footing (east abutment).
Earth straps attached to the abutment are required to resist the creep, shrinkage, braking, earth pressure and surcharge applied behind the abutment. The western abutment fill is retained by a shotcrete soil nail wall of min structural thickness of 170 mm with nails spacing as per the geotechnical design requirement. The eastern abutment fill is retained by an RE wall. Both walls are independent of the abutment foundations and resist soil and surcharge loads applied from the roadway above.

In-situ approach slabs include a down-stand beam around three edges due to the high skew resulting in a large span and large design actions at the edges of the slab.
Precast full height medium containment barriers are installed onto approach slabs via an in-situ kerb. Medium and regular containment off-structure barriers are located on both the approach and departure of Bulla Road Bridge.

Superstructure Design

A bridge deck grillage model was undertaken using Autodesk Structural Bridge Design in order to determine bridge deck design loadings. The software can generate moving loads, such as that for the designated SM1600 and can also be used for the design pre-stressed concrete and reinforcement concrete sections.

Due to a slight road horizontal alignment taper the girders are required to be asymmetrical with varying beam flanges. The high bridge skew also requires diagonal cut-outs in the girder ends with an in-situ diaphragm to minimise spalling of the girders. The cut-out creates a non-symmetrical girder cross-section with discontinuous tensioning strands in the top flange. This non-symmetry has been taken into account in girder design. The interaction between girder and diaphragm has been carefully considered and additional detailing provided in design drawings to ensure reinforcement clashing is resolved.

Due to the high skew the reaction curve along the diaphragm beam is unsymmetrical/ or skewed and results in high shear reactions and hogging moments at obtuse corners and comparatively low reactions at acute corners. This variation in bending moment across the width of the deck creates a torsion as the planes of maximum stress are not parallel to the design line. This has been considered in the deck design with additional top and bottom fanned longitudinal reinforcing detailed in the slab end zones at abutments, in addition to general detailing to account for skew throughout the deck, longitudinal reinforcement aligned parallel to skew and transverse reinforcement perpendicular to girders. Additionally the high skew creates a cantilevered portion of deck at the acute corners. Particular attention has been made to reinforcing detailing in these zones.

Bearing design and selection has taken in account the transverse forces and rotations imposed by the bridge skew angle, particularly at acute corners as the deck expands and contracts diagonally creating high shear forces.

The bridge skew requires jacking of the superstructure to be carried out from the diaphragms instead of the soffit of the beams. Jack positioning has been carefully considered to account for uplift near acute corners.

Substructure Design

SpaceGass structural design and analysis software was used to model the substructure elements and to determine pile design loading (western abutment) and maximum bearing pressures under the spread footing (east abutment) for geotechnical design. Soil springs against piles and columns were not considered for loads acting towards the centre of span due to the presence of the RE wall and SNW as advised by Geotechnical Engineer. Structural elements were designed using Autodesk Structural Bridge Design Software. Abutment straps were modelled using springs at the rear face of abutments.

Approach Structures

The approach slabs have been modelled and analysed using SpaceGass structural analysis computer software. The analysis and design has taken into consideration of the impacts of high skew including large span and resulting large design actions at the edges of the slab. The skew angle of the slab, which also results in an uneven distribution of slab moment due to live load.

The in-situ approach slabs have been detailed with edge thickening to reduce the torsional moment through the slab. This detailing also assists by reducing the sagging moment and slab deflection. Additional reinforcement has been detailed at acute corners as these areas attract high bending moments, particularly under barrier impact loads.

PASCOE VALE ROAD BRIDGE OVER WESTERN LINK

General

As part of the CTW project, an upgrade to the interchange between Bell Street, Pascoe Vale Road and CityLink was required to create a dedicated lane for traffic travelling from Bell Street to Pascoe Vale Road so that the existing two lane Bell Street Bridge could be dedicated for traffic entering CityLink from Bell Street. This would provide the benefit of minimising congestion and improve safety by eliminating the current left hand merging. To achieve this, a new 269m long bridge was proposed from Bell Street to Pascoe Vale Road which would also include a new shared user path to improve connectivity across the freeway with the Moonee Ponds Creek Trail (Refer Figure 3 and 4).

The site for the new bridge is complex and required the bridge to span over the entire CityLink carriageway consisting of 11 traffic lanes, the exiting Pascoe Vale Road exit ramp bridge, Moonee Ponds Creek concrete lined drainage channel, 2 tracks of the Craigieburn railway line and was in close proximity to Strathmore Secondary College; an important stakeholder to the project. These constraints controlled the bridge alignment given the limited space for piers and resulted in the use of large spans up to 62 m.

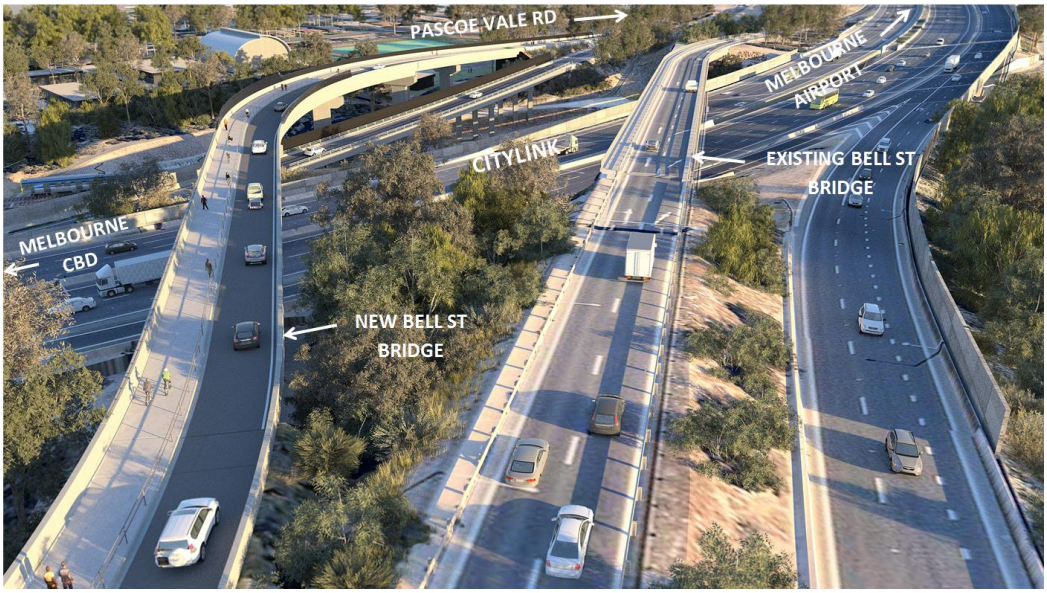

Figure 3 Artist Impression of Reconfigured Bell Street Interchange

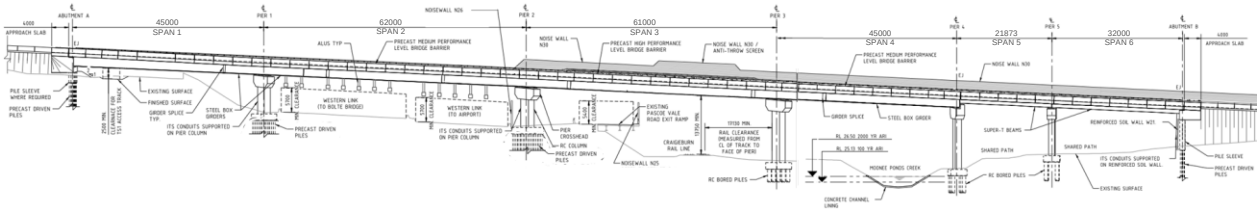

Figure 4 New Bell Street Bridge General Arrangement Elevation

Superstructure

Spans 1 to 4 (45m, 62m, 61m & 45m) utilise 3 No. of continuous 2400mm deep steel box girders made composite with 70mm thick reinforced concrete (RC) precast deck panels and 180mm minimum thick RC in situ deck slab (Refer Figure 5). The steel box girders are set on a 3% cross fall towards the inside of the curve for their full extent as twisting the girders would be complex in order to follow the change in cross fall. To accommodate this, the in situ deck slab is generally constant in thickness except for the first 42m (starting from abutment A) where the road cross fall is against the box girder fall and has been thickened up to a maximum of approximately 483mm and transitioned down over this length. The box girders were set out based on a constant 500mm distance from the edge of the deck to the centreline of the first girder external web. The girders splay out as required to accommodate the increased deck width in span 3 where the deck is curved.

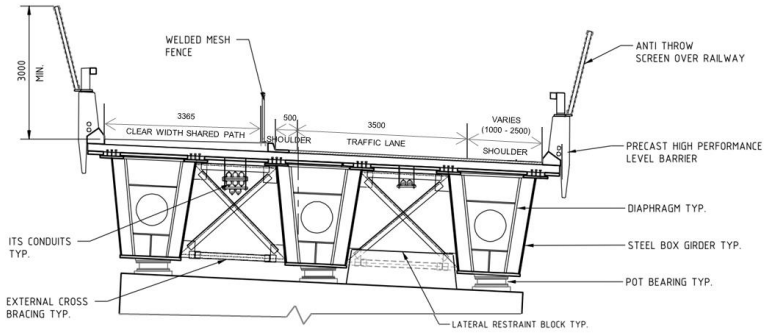

Figure 5 New Bell Street Bridge Typical Sections

The box girder segments are spliced with bolted joints to form continuity due to the long span lengths and limitations of transportation and lifting. Each line of girders was segmented into 7 with the whole bridge consisting of 21 girder segments in total. Internal top flange bracing using a warren truss layout and vertical K-bracing (provided at every alternate bay) were provided to form a quasi-closed box section prior to deck casting and to control distortional effects of the box girder. Internal web stiffeners are provided to increase the shear strength of the webs and provide a connection point for the internal bracing members. Internal steel diaphragms are provided at support locations with bearing stiffeners and access holes to allow for future maintenance and inspection. Openings are also provided in the bottom flange for access inside the boxes at the ends.

Figure 6 Box Girder Internal and External Bracing

External cross bracing between girders is provided at each of the supports and additional bracing at intermediate points to control relative girder deflection and twist during deck casting at a nominal spacing of 15 to 16m (located at approximately at third points for 45m spans and at quarter points for 62m spans).

Spans 5 and 6 (23.9m & 32m) utilise 5 No. standard 1500mm deep precast simply supported prestressed Super-T beams with 180mm minimum RC in situ deck slab.

Substructure

The substructure supporting the new bridge includes 2 abutments and 5 piers. The abutments were aligned approximately square to the girder/beam arrangement and the piers are aligned parallel to existing services and conduit routes, the CityLink carriageway and the railway line. The skews are progressively transitioned from a maximum skew 22° and 29° at pier 1 and 2 respectively, 27° at pier 3 (aligning approximately with an adjacent sewer), 9° at pier 4 and no skew for pier 5.

Both abutments are supported each on 9 No. 350mm square precast driven piles driven to either rock or refusal in dense sandy gravels. The abutments are tied back with VSL reinforced soil straps designed to take earth pressure, live load surcharge and longitudinal bridge bearing loads.

Piers 3 to 5 are all similar in construction and each are supported on 6 No. 900mm diameter bored reinforced concrete piles up to 30m long socketed into siltstone rock. Piers 1 and 2 were originally detailed as bored piles, however upon further investigation prior to piling, the level of quality rock was found far lower than expected (requiring a length change from 43m to over 50m). This was right at the limit of the piling rig and a decision was made to change to a driven pile option. This resulted in pier 1 and pier 2 being supported on 16 No. and 20 No. 400mm square precast piles respectively and driven to a depth of around 20m.

Typical RC pile caps 1.5m deep connect the piles and support single large blade columns (Refer Figure 7). RC crossheads, 2.6m deep support the bridge superstructure above. Deep crossheads were considered to minimise reinforcement congestion and avoid post tensioning as clearance was not an issue. The transition pier 4 also includes an upstand step to accommodate the difference in height from the steel box girder section to Super-T beams. The heights of the piers vary between 8.9m to 15m; measured from the top of the pile cap to top of the pier crosshead.

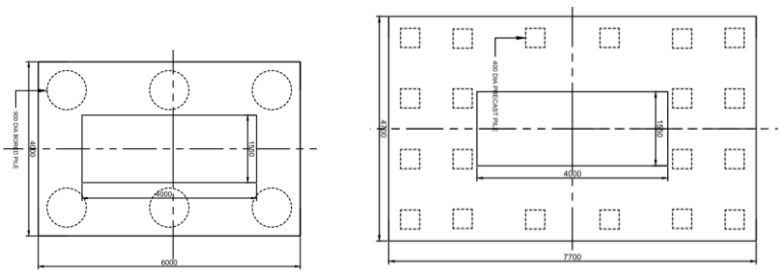

Figure 7 Typical Bored Pile Cap (Left) and Pier 2 Driven Pile Cap (Right) Arrangements

Articulation

The bridge is made up of two main segments delineated by 3 expansion joints in total; one at each of the abutments and one at pier 4 where the structure changes from steel box

girders to super T's. Due to the large range of movements, Granor ETIC EJ200 saw tooth finger joint system were required at abutment A and pier 4 while the smaller movements were accommodated with the Granor strip seal AC-AR expansion joint system at abutment B.

The steel box girders are supported on pot bearings. Longitudinally free sliding bearings are provided at abutment A, pier 1, pier 3 and pier 4 while at pier 2 the bearings are all longitudinally fixed. The Super-T spans are supported on standard rectangular elastomeric bearings.

MT ALEXANDER ROAD OVER MOONEE PONDS CREEK

General

The Mt Alexander Road Bridge over MPC is a new three span bridge that passes over Moonee Ponds Creek immediately downstream of the ornamental lake. The bridge also passes over the off-structure shared user path that follows the creek. The bridge will carry two 3300 mm wide traffic lanes of city bound traffic from Mt Alexander Road (approach road) to Flemington Road (exit road) and a 3500 mm wide on-structure shared user path on its eastern edge. Refer to Figure 8 for General arrangement of the bridge.

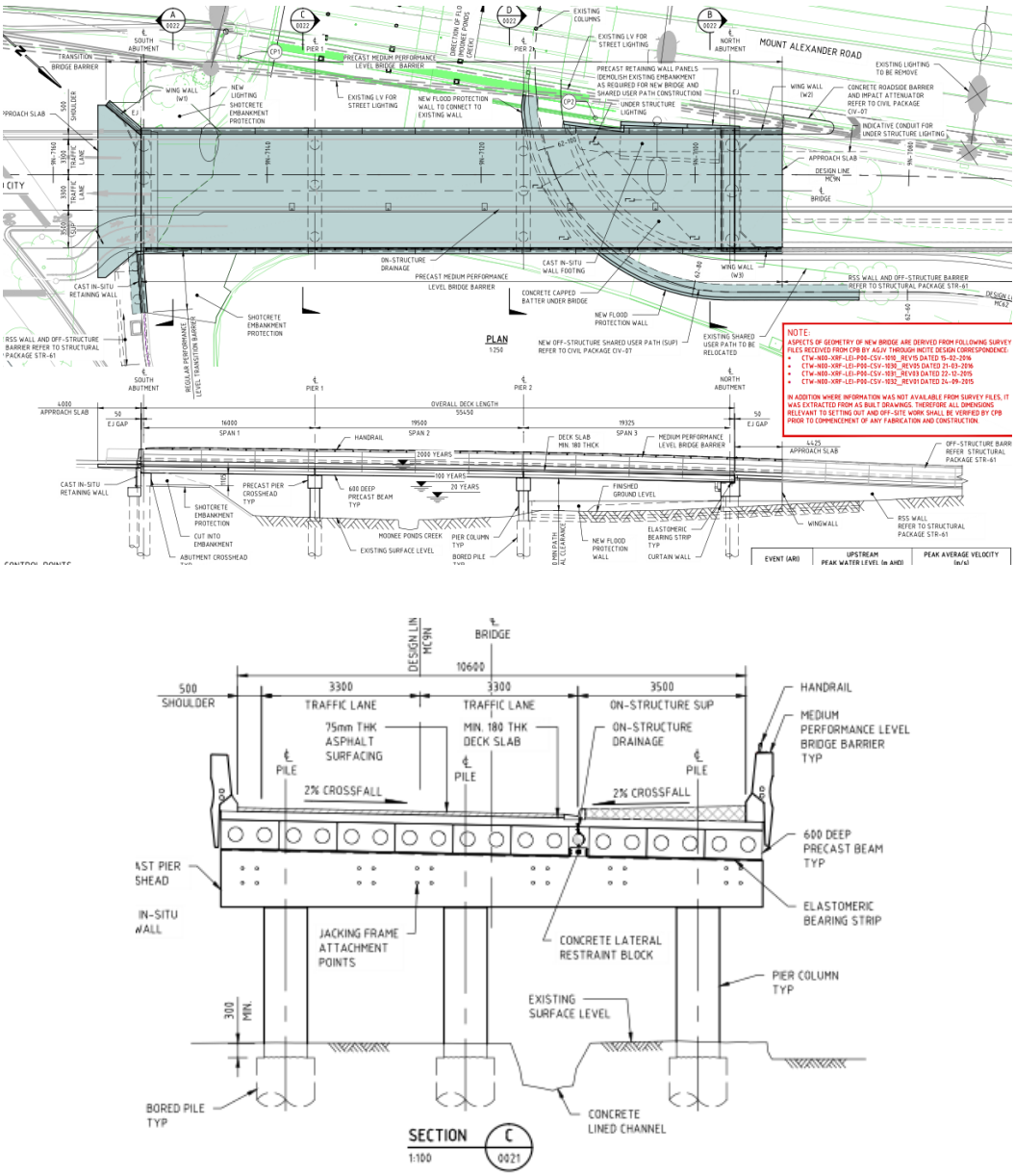

Figure 8 Mt Alexander Road Bridge over MPC

Superstructure Design

The new 55 m long bridge consists of 3 spans, two 19.5 m long and one 16 m long. The superstructure is to utilise 9 twin cell 600 mm deep 1200 mm wide precast plank beams. The planks are to be set on a 2% cross fall towards the ornamental lake. A 420 mm gap is left between two planks to accommodate the on-structure drainage and concrete lateral restraint blocks. A minimum 180 mm cast in-situ deck slab is to overlay the beams.

A shared user path is to run along the east edge of the new bridge and cross fall at 2% towards the roadway. The opposing bridge and path cross falls require an additional 180 mm of non-structural deck thickness at the shared user path. Medium performance level precast concrete barriers, 1100 mm high, are to be attached to each edge of the deck via a cast in-situ stitch pour. The barrier on the east side has a 200 mm high steel handrail.

The bridge superstructure has been modelled and analysed as two dimensional grillage using ACES Bridge Analysis System computer software.

Substructure Design

The substructure supporting the new bridge includes 2 abutments and 2 piers. The abutments and piers are to be aligned square to the beam arrangement. Both abutments consist of 1200 mm deep RC sill beams supported each on 3 No. 1200 mm diameter bored piles socketed into the underlying rock. The wing walls at the north abutment run parallel to the bridge and have bridge barriers attached to them. The east barrier butts to the north bridge approach RSS wall barrier and the west barrier terminates via a crash attenuator. The west wing wall at the south abutment is to be splayed and have a transition bridge barrier attached to it. The south abutment being the departure side of the structure allows the west barrier to have no termination treatment. A concrete retaining wall butts up to the east side of the south abutment. The east side transition bridge barrier is attached to the retaining wall and is to butt to the Flemington Road exit ramp RSS wall barrier.

The north abutment requires a curtain wall below the sill beam to contain the abutment fill. The south abutment is spill through utilising the existing concrete wall and new shotcrete embankment protection. Both piers are to be of the same construction consisting of 1300 mm wide crossheads of varying depth (975 mm to 1200 mm) supported on 3 No. 900 mm diameter columns per pier. The crossheads are to be precast with vertical ducts cast-in to allow for a post-grouted integral connection with the columns. The columns continue into 1200 mm diameter bored piles below ground level that are to be socketed into the underlying rock.

The bridge substructure has been modelled and analysed as a two dimensional space frame using SpaceGass structural analysis computer software. Piles were modelled using a series of springs to model the soil stiffness based on the recommendations from Geotechnical Engineer. Allowance for variation in soil stiffness was considered in the design.

Existing Bulla Road Bridge North Abutment Modification

General

The existing Bulla Road Bridge crosses the Tullamarine Freeway in a north/ south alignment, as shown in Figure 9. The structure is a four span (11350 mm, 25900 mm, 25900 mm, 9150 mm from south to north) bridge that crosses the Tullamarine Freeway at a 13 degree skew. The superstructure consists of 13 pre-tensioned I-girders, acting compositely with a cast-in-situ concrete deck, that are continuous over the piers via cast in-situ post tensioned concrete diaphragms. The superstructure is supported by 5 columns at each pier. Each column is on a pad footing that founded onto basalt. Each abutment sill beam is supported by 7 counterfort walls. Each wall is on a pad footing sits on top of basalt. Expansion joints are located at the abutments only.

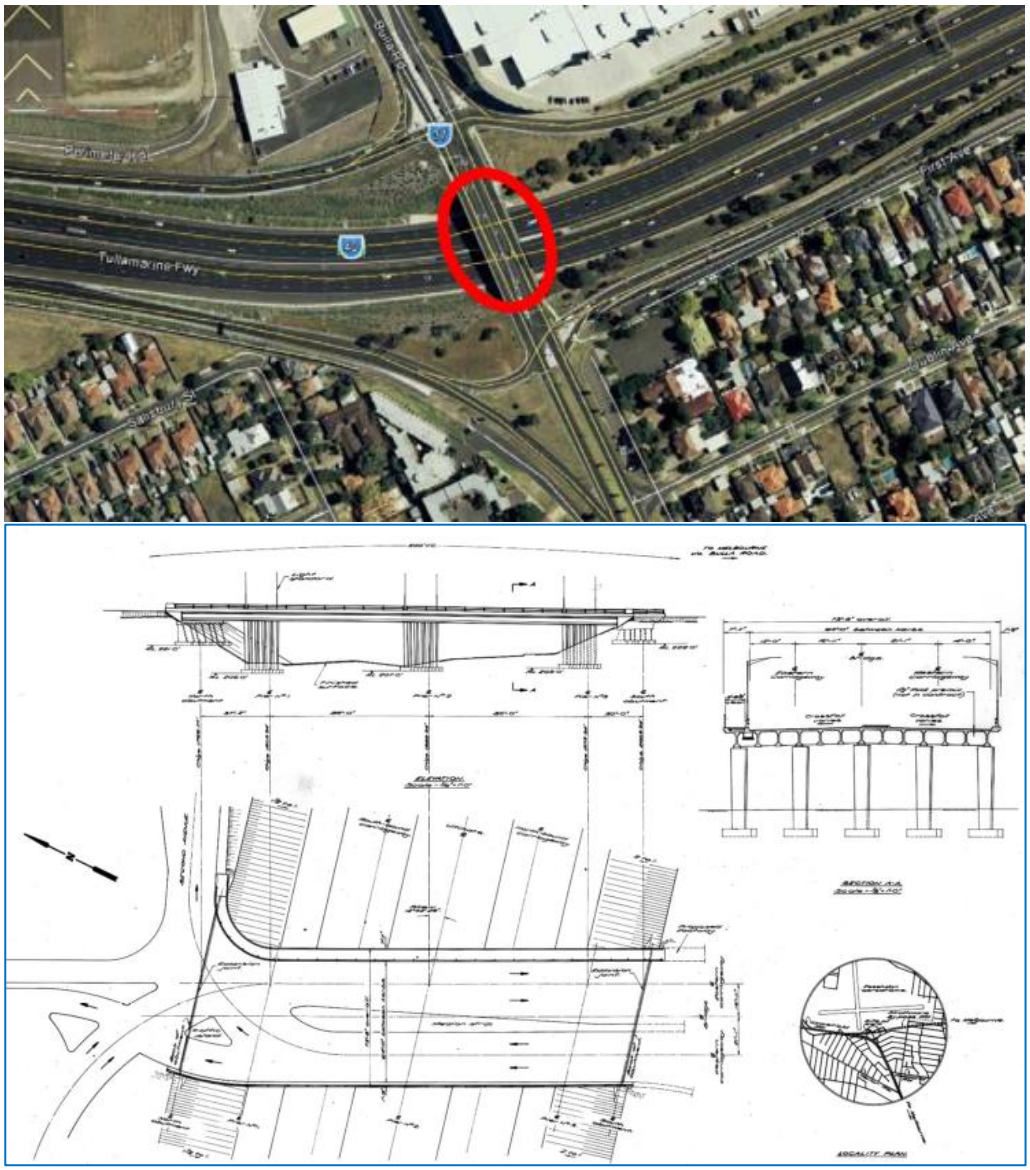

Figure 9 Locality Plan and Existing Bridge Arrangement

Proposed upgrade works

CityLink Tulla Widening incorporates two additional lanes at the existing Bulla Road Bridge. It is proposed to incorporate these two additional lanes between Pier No. 1 and

North Abutment under the existing Bulla Road Bridge. To do this, the existing spill through batter in front of the north abutment and a section of the spread footing and buttress wall required modification.

In order to provide the vertical support for the existing bridge abutment, new 550 mm thick reinforced concrete blade wall and 150 mm soil nail wall are proposed between the existing footing and abutment sill beam. To provide lateral retention against soil pressures and surcharge, ground retention is achieved using a combination of soil nails and rock bolts. The new blade wall above footing and shotcrete walls above and below footing also provide lateral retention by using soil nails and rock bolts respectively.
The design also incorporated cast in situ and precast reinforced concrete protection barriers at both the central median for pier 1 and at shoulder. Pier protection barriers have been designed for High Performance level with 1500 mm high concrete barrier above finished surface level, thus achieving the minimum 1400 mm effective height required for High Performance level.

Generally, the construction process is:

- Excavate the north abutment embankment down to the existing pad footings;
- Drill existing buttress walls and pad footings and fix reinforcement starter bars;
- Cast concrete walls with soil nails between the existing buttress walls and pad footings;
- New concrete walls to be stitched to existing buttress walls and pad footings;
- Break back existing and now exposed buttress walls and pad footings to create a vertical wall;
- Excavate, shotcrete and soil nail remainder of embankment down to design finished surface level;
- Construct a high containment level barrier at face of shotcrete wall; and
- Construct pier protection barriers at all piers.

All of the above work to be undertaken without any traffic restriction or road closure at bridge deck level. Figure 10 and 11 below shows the details of existing abutment modification.

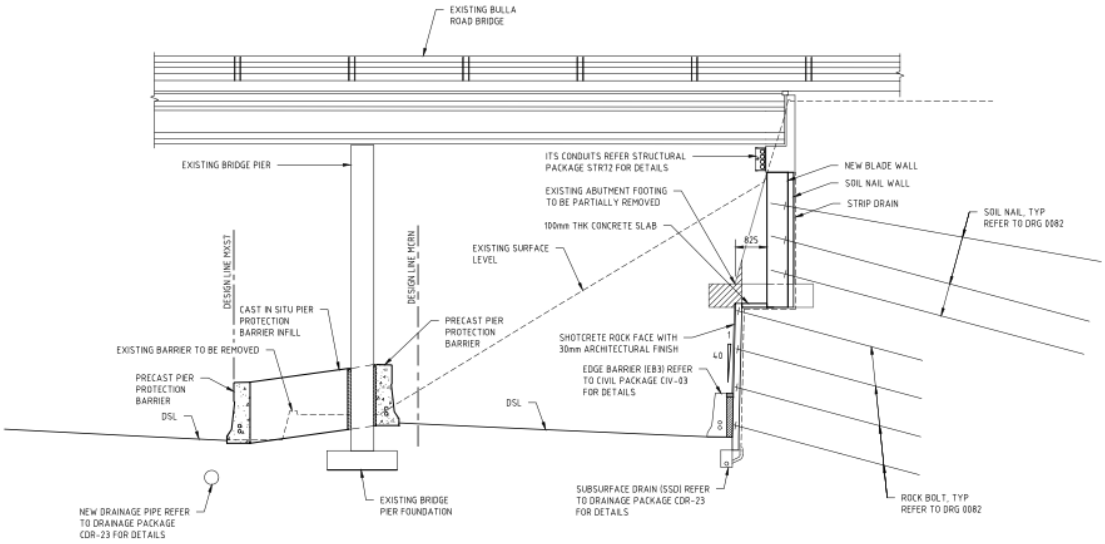

Figure 10 Elevation-Abutment Modification

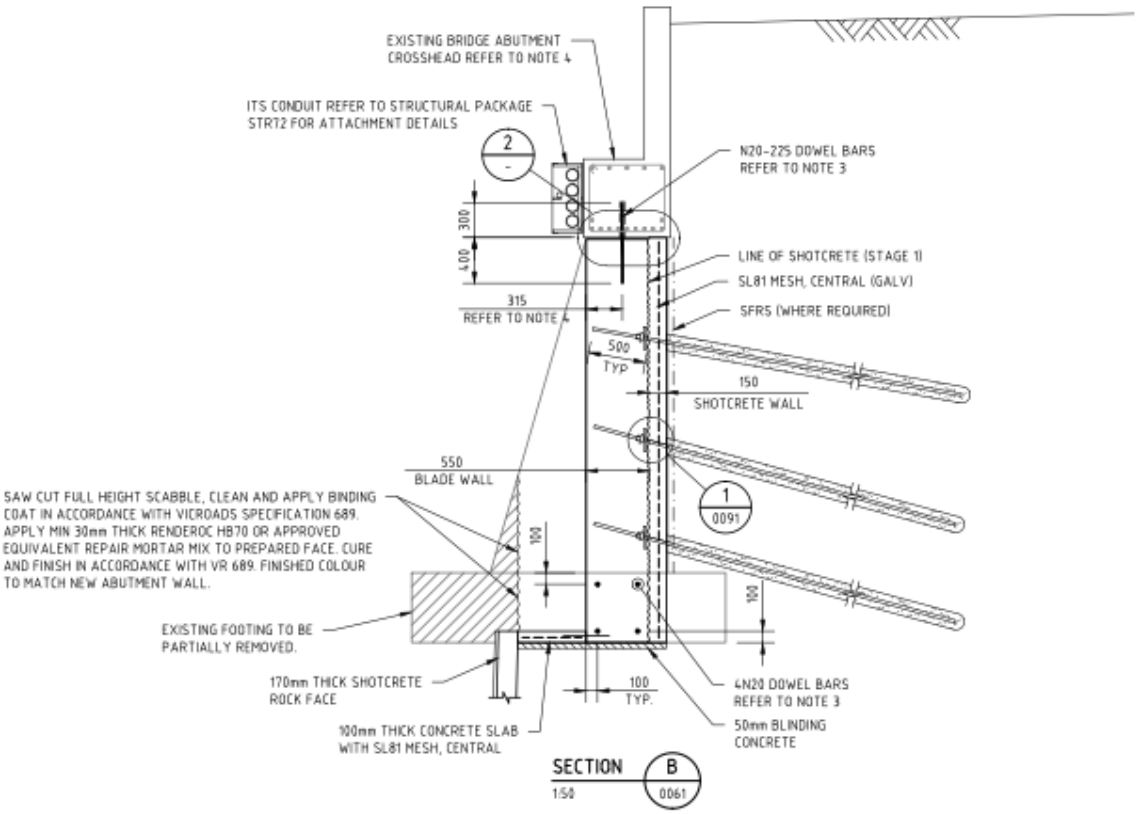

Figure 11 Detail of New Wall and Soil Retention System

WIDENING OF WESTERN LINK BRIDGE OVER PASCOE VALE ROAD

General

The proposed Pascoe Vale Road Bridge widening is a new 73.2m long structure that will carry a single 3500mm northbound traffic lane and shoulder over Pascoe Vale Road. The structure consists of 4 spans (15m, 19.1m, 20.6m & 18.5m) matching both the existing northbound and southbound bridges. The existing bridges consist of both the 1967 Tullamarine Freeway north and southbound structures and the 1997 CityLink northbound widening. The overall width of the structural widening varies approximately between 3725mm (east end) and 2855mm (north end).

The widening is achieved by adding 2 No. 1000mm deep precast prestressed concrete Super-T beams with 180mm in situ RC deck slab. The girder spans match that of the existing structures and are made continuous with an in situ RC diaphragm. The in situ diaphragm width was designed to match the pier so that the beams could be supported off the pier (with temporary brackets) or the pier top face during erection. Shear keys are provided at each end of the beams (at piers only) to improve load transfer between the precast beams and in situ concrete. To provide continuity for sagging moment over the pier, the prestressing strands are extended into the diaphragm, lapping with the strands from the adjacent beam. Additional passive side face reinforcing bars are cast into the beam ends for crack control and additional capacity. Continuity for hogging moments is achieved by the main top steel in the deck slab. The widened structure is to be stitched to the existing through the use of epoxied dowel bars anchored into the existing deck slab.

The substructure supporting the new bridge widening includes 2 abutments and 3 piers. The pier and abutments are aligned to match the existing bridges with a skew of approximately 42°. Both abutments consist of 1000mm deep by 1250mm wide RC sill beams supported on 4 No. and 3 No. 350mm square precast driven piles at the east and west abutment respectively. RC wing walls are provided on one side only where the embankments spill through. Due to the long length (4000mm) of wing walls and limited capacity of the main bridge piles to take the additional load, the first off structure barrier pile is connected to the wing wall to provide additional support. This also provides additional load sharing under barrier impact loads. The spill through batter is to be tied into the existing and protected with grouted rock beaching matching the existing.

Piers 1 to 3 are all similar in construction and each supported on 7 No. 400mm square precast driven piles. A 1200mm deep RC pile cap connects the piles and supports a single tapered 3000mm (approximately) to 2500mm wide by 1000mm deep reinforced concrete column. The height of the piers is approximately 5.6m; measured from the top of the pile cap to top of the column.

Superstructure Design

The widened and existing 1967 northbound bridge substructures have been modelled and analysed as a three dimensional space frame using both ACES Bridge Analysis System and SpaceGass structural analysis computer software (See Figures 12 and 13). The 1997 CityLink widening structure was not modelled as part of the design of the new bridge widening as the width of the 1967 structure is such that the new widening has negligible influence upon it. Reduced design actions on widening bridge were found from the full model that included the 1997 structure used for Load Rating.

Staged construction modelling was required to be undertaken to determine the effects due to changes in the structural behaviour and particularly the effects of creep and shrinkage from beam erection, initial main deck pour and after the stitch pour is made. A separate model with long term section properties was also considered as part of the analysis.

A minimum 180 mm deep in-situ new deck that acts compositely with the new precast super T beams is to be stitched to the existing deck slab. The deck stitch is modelled as a pin joint as there is only a single layer of reinforcement from deck. The design of the deck stitch has included the effects of live load, differential settlement between the existing and proposed structure, differential shrinkage and creep between widened and existing deck and barrier impact load.

The residual effects due to the longitudinal creep and shrinkage action of the widened deck have been considered in the design of both the existing and proposed elements. An equivalent temperature based on the strain due to differential creep and shrinkage between the existing and widened structures has been applied in structural modelling. Creep and shrinkage of the original I-girders has been assumed to be complete.

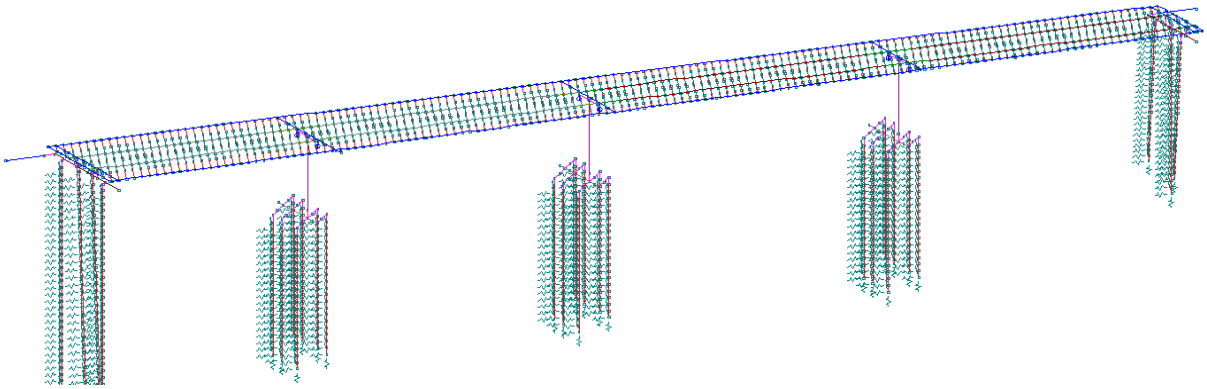

Figure 12 New Widened Superstructure and Substructure Grillage Model

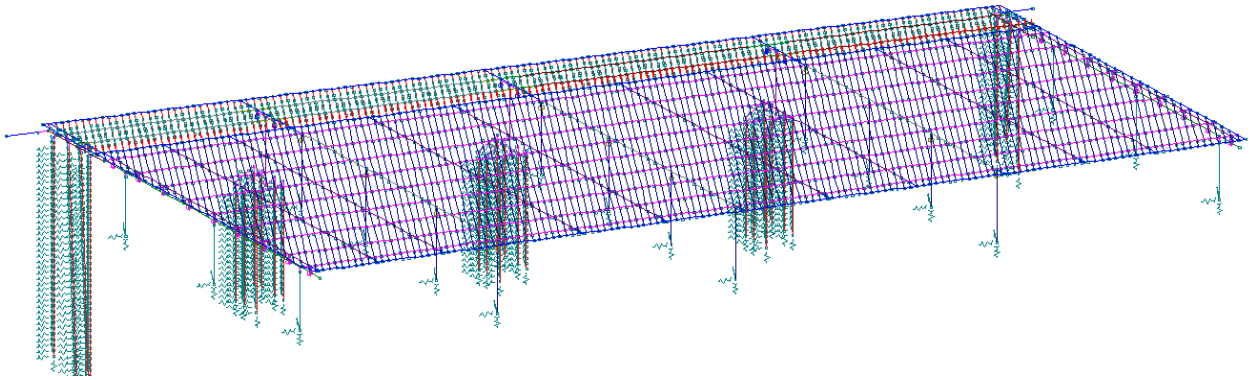

Figure 13 New Widening Including Existing Superstructure and Substructure Grillage Model

Substructure Design

The widened and existing bridge substructures have been modelled and analysed as a three dimensional space frame using SpaceGass structural analysis computer software. Piles were modelled using a series of springs to model the soil stiffness based on the recommendations from Douglas Partners. Allowance for variation in soil stiffness (50% to 200% as advised by DP) was considered as appropriate in the design.

Deck Stitching

To ensure the structural integrity of the new widening works and adjacent existing structure, a deck stitch is to be provided. The stitch provides both longitudinal and lateral connection between the existing and widened decks. This stitch connection is required to transfer the effects of live load, differential shrinkage between the new and existing decks (as result of the different ages of the concretes), any effects due to differential settlement between the existing and proposed structure and barrier impact load. To achieve this connection, N24 dowel bars at 150 mm centres embedded 700mm into the existing concrete deck (90mm below the top of the deck) and bonded using Hilti Hit RE500 epoxy.

To achieve design life as required, galvanised dowel bars have been nominated. In addition a continuous 500 mm wide waterproofing membrane is to be installed over the stitch joint for the entire length of the widening.

To design the deck stitch, connection with existing deck was modelled as a pinned connection and based on the strain due to differential creep and shrinkage between the existing and proposed structures has been applied as equivalent temperature in structural modelling (in addition to the other loads referred to above) as shown in Figure 13. The assumption of a pinned connection results in reduced load sharing between the new and existing structure when compared to a moment connection and is therefore conservative for the design of the widening elements. In addition, the deck stitch was also modelled as a fixed connection based on the cracked stiffness to determine the tension in the dowels due to couple forming between the dowel and outer concrete compressive edge.

The serviceability of the joint was also assessed by investigating the predicated crack widths using the method defined in The Assessment of Concrete Highway Bridges and Structures BD44/95. Crack width was calculated at the surface for the serviceability moments obtained from the models.

Once the deck stitching is complete, some in plane rotation of all the bridge decks together is expected due to the eccentric effects of creep and shrinkage. The effects of this however were calculated to be negligible due to the large width of existing bridge decks relative to the widening structure. Under this effect the existing expansion joints are predicated to close up by less than 1mm from their current position.

The widening deck is to be cast leaving a 600 mm gap between the existing deck and widened deck allowing the stitch joint to be poured at a later stage. This delay in making stitch joint integral reduces the differential longitudinal movement between the existing and widening structure as it allows the early stages of creep and shrinkage of the new structure to occur before the connection of the two decks is made.

A two months minimum time delay was nominated between the stitch and remaining deck pour if standard VicRoads concrete mix is used. This time delay can be reduced to two weeks if entire deck is cast using low shrink concrete with design shrinkage strain of 450 microstrain.

While the bridge deck is not yet stitched, the existing carriageway is open to traffic with vehicles running in the lane adjacent to existing traffic barrier. As the deck stitch reinforcement and dowels must be placed prior to stitching, the relative deflection between the existing and widening structure must be limited to avoid issues including potential

dislodgement or damage to the rebar concrete bonding. The estimated deflection at the interface between the new and existing bridge deck was calculated to be less than 7mm under current traffic loads. This is sufficiently small to prevent issues during this stage as there is still 600 mm gap between the existing deck edge and the dowelled bars are not tied to the new deck reinforcement.

Traffic restrictions proposed to be in place for the deck stitch joint casting to reduce risk of de bonding the reinforcement/dowel due to vibration and following traffic restrictions are nominated during stitch joint casting and curing:

- The traffic lane (minimum of 3.5 m width from edge of stitch) immediately next to the stitch joint to be fully closed.
- Remaining traffic lanes to be speed limited to 40 km/h until the stitch joint concrete reached a minimum compressive strength of 25 MPa.

During stitch pour and with lane closure in place, the estimated deflection at the interface between the new and existing bridge deck is less than 0.3mm under current traffic loads. As the differential deflection does not exceed the rib height of the bar deformations, a void impacting the bond between the dowels and stitch concrete is not expected. Furthermore, to reduce any possible de-bonding effects, stitch concrete is nominated to have slump value not exceeding 80mm.

WIDENING OF EXISTING CITY LINK SOUTHBOUND RAMP TO POWER STREET (RAMP Z)

The existing CityLink southbound ramp to Power Street and Burnley Tunnel (Ramp Z) was built in 2009/2010 as part of the West Gate Freeway Alliance. The ramp serves southbound CityLink traffic destined for Power Street and the Burnley Tunnel. Ramp Z takes traffic from CityLink, turns left approximately 90 degrees, travels over and then merges parallel with the West Gate Freeway traffic. Refer to Figure 14 for location plan. Ramp Z and the Departure Structure are to be widened on the inside of the curve over its entire length to allow for one additional traffic lane.

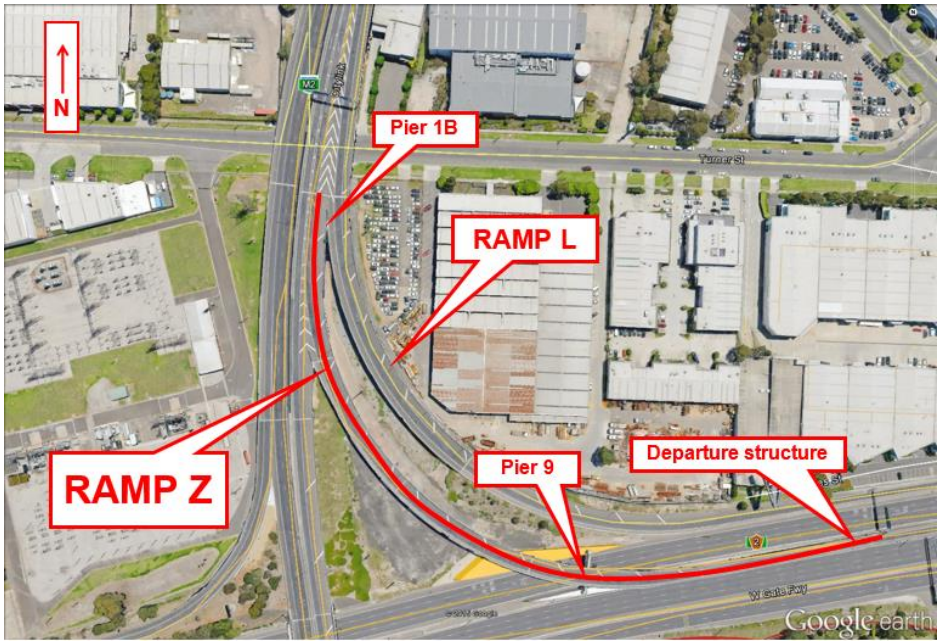

Figure 14 Ramp Z Location Plan

The widening of Ramp Z structure generally matches the design and construction principles of the existing structure, including structural form and depth, design loads and articulation. The widening consists of 14 spans and 420 m of elevated structure and 60 m of earth retaining structure. The deck widening varies from 0.3 m to a maximum of 4.4 m at a radius of approximately 170 m to 220 m for the curved section.

Other than at Pier 9 a new substructure at each existing pier consisting of a cast in-situ column, cast in-situ pile cap and a number of precast driven piles is to be constructed for the widening. The existing Pier 9 crosshead, which spans the eastbound carriageway of the West Gate Freeway, does not require any new foundation elements for the widening. An additional pier, Pier 1B, is to be constructed at the start of the widening. The new substructures are to be independent of the existing other than the pile caps at Piers 10A to 13A. These pile caps are to be stitched to the existing.

The first two spans of the widening are to be constructed utilising simply supported steel I-Girders, acting compositely with in-situ reinforced concrete deck. Precast transfloor panels are to be provided to act as permanent formwork for in-situ reinforced concrete deck. The new in-situ deck is to be connected to the existing deck using drilled and epoxied reinforcing bars. From Span 3 to Span 14 the superstructure is to be constructed

utilising simply supported precast super-T beams, acting compositely with an in-situ reinforced concrete deck. The widening is achieved by two beams per span from Span 3 to Span 11, then one beam per span from Span 12 to Span 14. The new in-situ deck is to be connected to the existing deck using drilled and epoxied reinforcing bars.

Superstructure

Span 1 and 2 are designed as simply supported steel girders seated on elastomeric bearings at the piers. From Span 3, the superstructure transitions from steel girders to precast super-T beams. The in-situ deck is made continuous over piers (other than expansion joints), and is designed to accommodate the rotations of the girders resulting from deflection.

Span 1 comprises a single steel I-girder and a stringer. Girder 1A acts non-compositely from Pier 1B to the edge of deck to avoid creating a stiff point at mid-span. Girder 1A is laterally connected to the existing girder with cross beam diaphragms. A system of lateral bracing is provided at Pier 1B to ensure Girder 1A is laterally fixed at the support and also does not limit the vertical movement of existing girders. Refer to Figure 15 and 16 for cross sections in Span 1 widening.

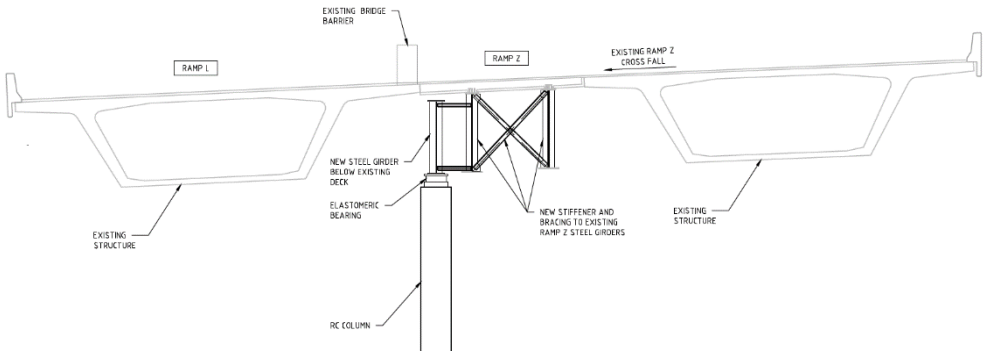

Figure 15 Span 1 at Pier 1B

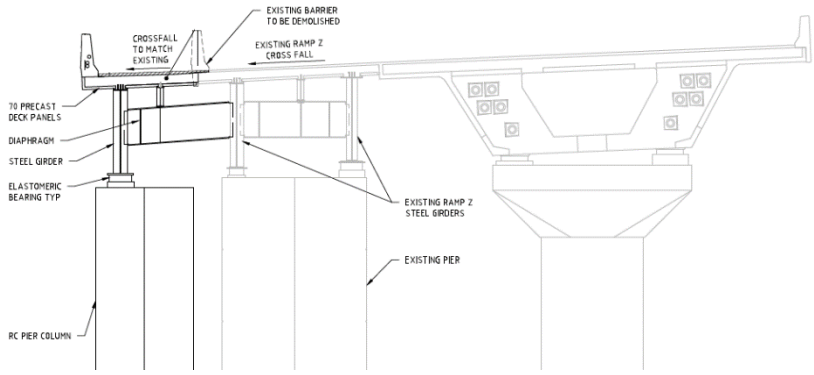

Figure 16 Span 1 at Pier 1A

Span 2 Girders 2A and 3A are ‘kinked’ in plan to suit the curved horizontal geometry of the deck. Torsional restraint is provided by pair of cross bracings at the ‘kinked’ points of girders. Both girders are required to be assembled together on site and supported on a temporary tower at mid-span during construction to minimise the amount of permanent twist in the girders. Steel girders are to be laterally braced and connected to the existing structure with crossbeam diaphragms at each end and cross bracing diaphragms at kinked point. Temporary tower is to be removed once the deck concrete gains 25MPa strength.

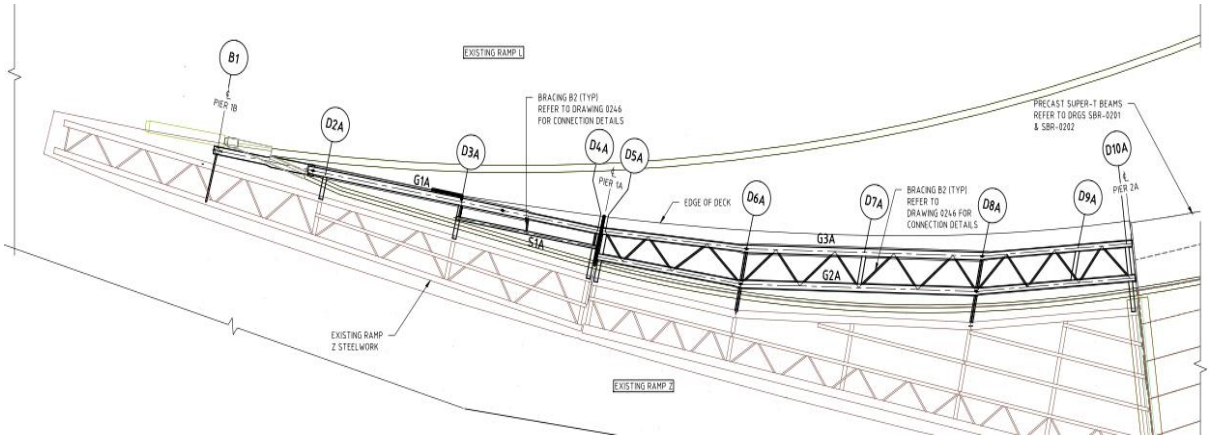

Figure 17. Span 2 Plan

The existing structure and widening was modelled using structural modelling programs Space Gass, Autodesk Structure Bridge Design and Sap2000. The as-built drawings for the existing Ramp Z and Ramp L were used to model the existing structure. A full 3-D finite element model of Span 1, Span 2 and Pier 9 steel frame was set up in Sap2000 (Figures 18 and 19). Shell elements were used to model all elements excluding cross bracing at Span 2 kinked points. Load effects were compared and verified with the grillage model in Autodesk Structure Bridge Design.

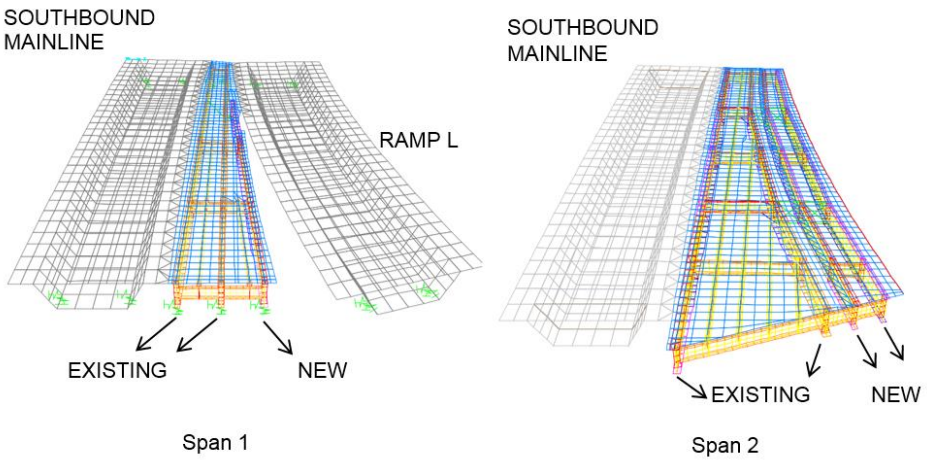

Figure 18 Span 1 and 2 Finite Element Models

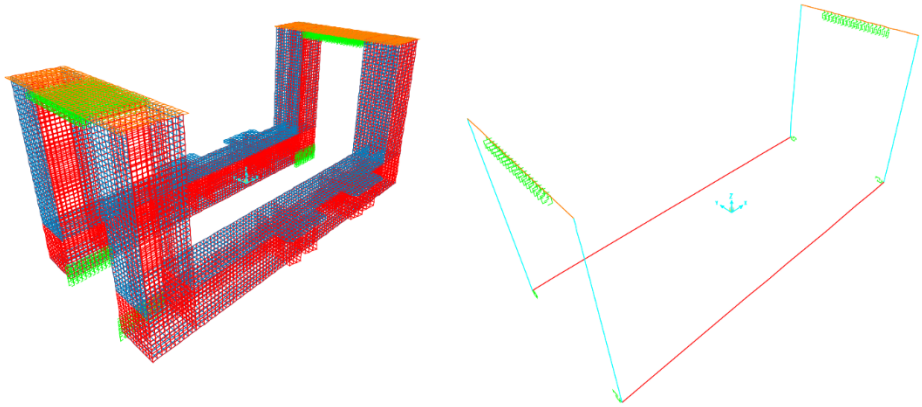

Figure 19 Pier 9 Steel Frame FE and Frame Models

Substructure

The bridge widening is generally supported by cast in-situ piers and pile caps with precast driven piles other than at Pier 9 and Pier 10. The new piers are aligned with the existing. The first widening piers (Pier 1B and Piers 1A to 8A) are within the Transurban land reserve below Ramp Z. The final four piers (Piers 10A to 13A) and the Abutment are adjacent to the eastbound carriageway of the West Gate Freeway. The new substructures are to be independent of the existing other than the pile caps at Piers 10A to 13A. These pile caps are to be stitched to the existing to utilize the existing piles for resistance against collision load. An additional pier, Pier 1B, has been introduced for the widening.

As Ramp Z is structurally connected to Ramp L at Span 1, there is a risk of additional load transferred to Ramp L due to the widening. Assessment showed that Ramp L does not have any reserve capacity to cater for additional load, therefore an additional pier, Pier 1B, is constructed at the start of the widening to support Girder G1A in Span 1 and eliminate any additional load transfer to Ramp L. Pier 1B location was optimised to maintain minimum length for Girder G1A and hence smaller load effects. Girder 1A was detailed to behave as a non-composite girder under the existing Ramp Z to eliminate creating a hard point at mid-span. Pier 1B is a 900 mm diameter cast in-situ circular concrete column supported by pile cap and four number of square precast driven piles. The headroom for the piling rig at this pier is limited to 7.0 m from bottom flange of the existing steel girder, therefore shorter pile segments are to be driven. Grout filled steel circular hollow sections (welded at joints) are to be driven around the piles to a depth of 6 m from the underside of the pile cap.

The existing Pier 9 spans the eastbound carriageway of the West Gate Freeway via a precast post-tensioned crosshead that is simply supported between cast in-situ columns. The crosshead is to be modified with a fabricated steel frame unit to support the super-Ts to accommodate the widening. The straddle portions of the unit are to be seated on high strength epoxy grout over the existing crosshead. The unit is approximately 4.8 m wide. A steel bracket lateral restraint block was proposed to be attached to the crosshead to avoid lateral loads transfer from superstructure to the steel frame. Four side bearings with PTFE finish is provided at lower points of steel support vertical legs to allow adequate gap between steel frame and existing crosshead. Refer to Figure 20 for Pier 9 steel frame support arrangement.

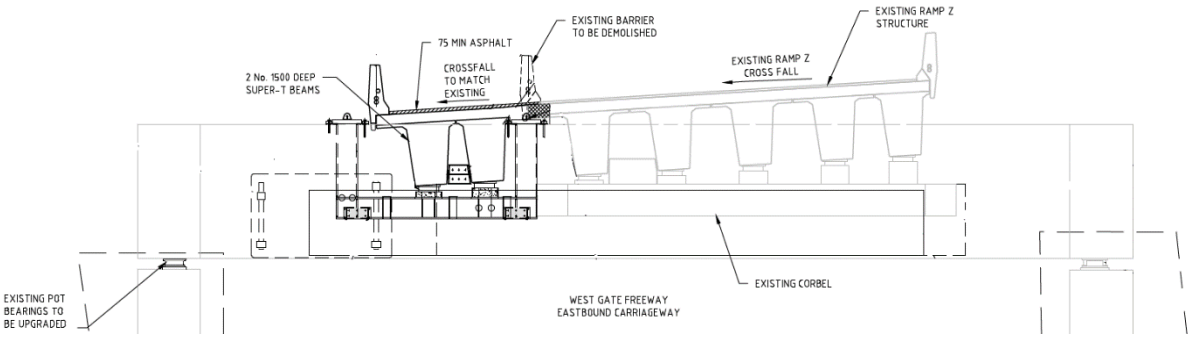

Figure 20 Pier 9 Steel Frame Support

The existing Pier 10 cantilevers over the eastbound carriageway of the West Gate Freeway. Pier 10A is an extension of the existing pile cap and with a new independent column. The column is approximately 3700 mm square and 6 m tall. Two new fabricated steel I-beams that cantilever over the West Gate Freeway are to be held to the top of the new column by cast-in stress bars. The new pile cap is to be stitched to the existing and will be supported by eight additional no. 400 mm square precast driven piles. Refer to Figure 4 for Pier 10 cantilever support arrangement.

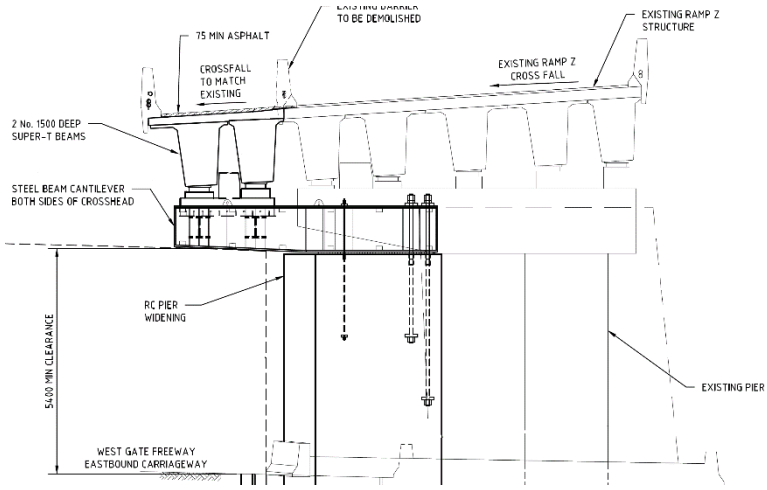

Figure 21 Pier 10 Cantilever Support

Deck Stitching

Deck stitching is the term used to define the construction activity of joining the existing concrete deck slab to the new concrete deck slab. The deck stitching is to be completed in a manner that ensures the structural integrity of the existing structure and the widening works. The stitch is to provide both a longitudinal and lateral connection between the existing deck and widening deck. This stitch connection is to be strong enough to transfer the horizontal load, a result of the different ages of the concretes, from the widened structure to the existing structure.

Traffic restrictions will be in place for the deck stitch joint casting to reduce risk of debonding the reinforcement/stitch bars due to vibration. Due to the Ramp Z being a long structure the following traffic restrictions was proposed to be in place during deck slab casting (including link slabs) and curing:

- While the deck is cast traffic control is to ensure traffic is kept at least 3.5 m away from the edge of the existing deck.

- Restrictions to remain in place until the new deck concrete reaches a minimum compressive strength of 25 MPa.
- Remaining traffic lanes to be speed limited to 40 km/h until the deck concrete reaches a minimum compressive strength of 25 MPa.
- Where above closures are not achievable the bridge must be fully closed to traffic.

The design of the deck stitch has included the effects of live load, differential shrinkage and settlement between the existing and proposed structure and barrier impact load. An assessment has also been conducted to determine the deflection due to live load at the interface between the new and existing bridge deck under the above traffic restrictions.

In the first two spans of the structure, the widening steel girders are braced to the existing steel girders. This results in the two structures deflecting together and therefore reducing the differential deflection between the two. The differential deflection for this section of the structure is less than 2 mm. From Span 3 to Span 10 the existing structure is at least four super-T beams wide. Although the widening beams are not connected to the existing beams in these spans, the existing beams provide sufficient stiffness to limit the differential deflection to less than 2 mm.

For global analysis, the deck stitch was modelled as a pinned connection to determine the worst loading effects on the new widening. A pinned connection will share a smaller magnitude of loading with the existing structure compared to a moment connection therefore making the design of the new elements more conservative. The deck stitch was also modelled as a moment connection to determine maximum crack widths once the widening is complete. At the stitch joint both sag and hog moments were determined from various loading scenario and wheel positions. The moments were determined using an un-cracked (short term) elastic modulus in the structural models. The same modulus was used in the crack width calculation using the method defined in The Assessment of Concrete Highway Bridges and Structures BD44/95.

Once the deck stitching is complete in-plane rotation of all bridge decks, i.e. between expansion joints, is expected due to the eccentric residual effects of creep and shrinkage. An equivalent temperature based on the strain due to differential creep and shrinkage between the existing and proposed structures has been applied in structural modelling. A low shrinkage concrete (450 micro strain) is to be used for cast in-situ deck. This eliminates the need for a separate longitudinal stitch pour as this low shrinkage concrete keeps the above effects on the existing structure to an acceptable level. This effect has been applied at the deck centroid to capture the level the effect will be transferred from proposed to existing structure.

WEST GATE FREEWAY EASTBOUND ELEVATED STRUCTURE WIDENING

General

The existing Westgate Elevated Structure relevant to this design package comprises the Westgate Freeway eastbound and westbound carriageways between Montague Street and Power Street. The elevated structures cross a number of existing roads below including – Normanby Road, Whiteman Street, Haig Street, City Road, Clarendon Street, Clark Street and Moray Street. The elevated structures also cross over three (3) number of existing light rail tracks at Normanby Road, Whiteman Street and Clarendon Street.

Figure 22 Location Plan *(Source: Google Earth Pro)*

The proposed bridge widening is on the southern side of the existing eastbound carriageway of the elevated structure between Chainage 12096 and 13097. The length of the proposed bridge widening is 1.001 km. The proposed structural widening will vary from approximately 0 m to 3.1 m and provides an additional lane on the Westgate Freeway eastbound carriageway.

There are a total of twenty four (24) number spans between Piers 309 and 333 of the existing Westgate Elevated Structure that will be widened. There are four (4) number spans where the existing cantilever flange concrete box girder is widened up to 0.8 m – between Piers 309 and 312; and between Piers 332 and 333. The remaining twenty (20) number spans will be widened with widths varying from approximately 0.8 m to 3.1 m between Piers 312 and 332, supported on steel girders and reinforced concrete columns.

Superstructure

For widening up to 0.8 m, the proposed deck steel support strut consists of diagonal CHS steel struts bolted to horizontal RHS beams and then bolted to existing concrete box girder outer web. The RHS beams and steel struts are positioned at 2.7 m typical centres, located central to the existing precast concrete box girder segments, to support the precast deck panels and cast in-situ reinforced concrete deck – see Figure 23. This is similar to previous widening on the northern side.

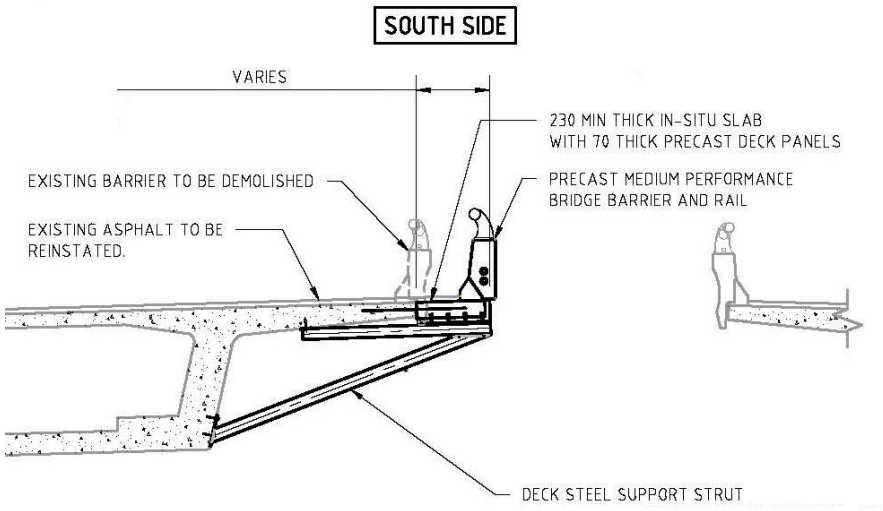

Figure 23 Deck Steel Support Strut Section

For widening between 0.8 m and 2.4 m, the proposed superstructure consists of a single 1750 mm deep steel fabricated 'I' girder with minimum 300 mm thick composite reinforced concrete deck slab – see Figure 24 Steel 'I' girder is adopted in lieu of steel box girder due to insufficient width to fit a steel box girder and to reduce deck 'dead areas' behind the bridge barriers that eliminate the risk of falling at height as identified in the SiD workshop.

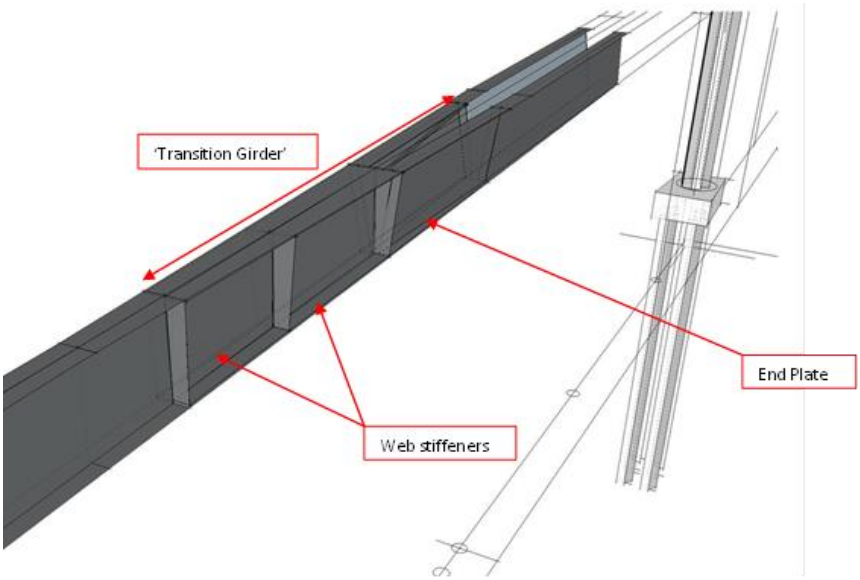

Figure 24 Isometric View of Transition Girder between Piers 316B and 317B

The steel 'I' girder will transition into steel box girder within the spans between Piers 316B and 317B (Span 8), and Piers 330B and 331B (Span 22) with tapered top flange and bottom flange widths and an end plate at the girder interface – 'transition girder' (see Figure 24). The length of the transition girder is 15 m. Additional intermediate transverse web stiffeners are provided on the steel 'I' girder in the transition zone to transition the superstructure stiffness from box girder section to 'I' girder section.

For widening between 2.4 m and 2.8 m, the proposed superstructure consists of a single 1750 mm deep x 1100 mm wide fabricated 'narrow' steel box girder with minimum 300 mm thick reinforced concrete composite deck slab – see Figure 25. The 'narrow' steel box

girder section is applicable from end of the ‘transition girder’ sections to Pier 317B and to Pier 330B. The ‘narrow’ steel box girder section will then widen to the ‘standard’ steel box girder section within Spans 9 (Piers 317B and 318B) and 21 (Piers 329B and 330B).

For widening between 2.8 m and 3.22 m, the proposed superstructure consists of a single 1750 mm deep x 1400 mm wide fabricated ‘standard’ steel box girder with minimum 300 mm thick reinforced concrete composite deck slab – see Figure 26. The ‘standard’ steel box girder section is applicable between Piers 318B and 329B.

Along the widening, the proposed superstructure has three (3) number new halving joints to match the existing halving joints on the existing concrete box girders.

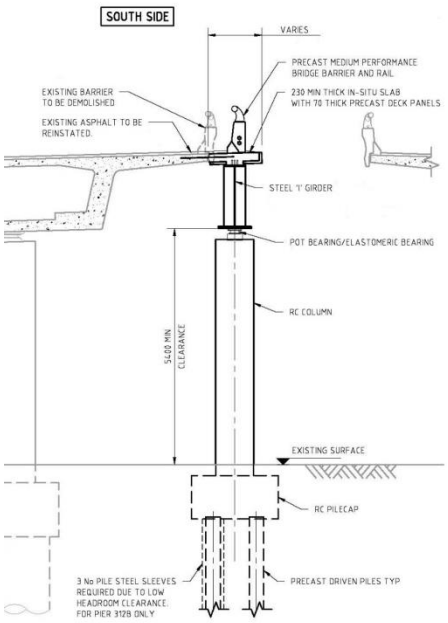

Figure 25 Steel ‘I’ Girder Section

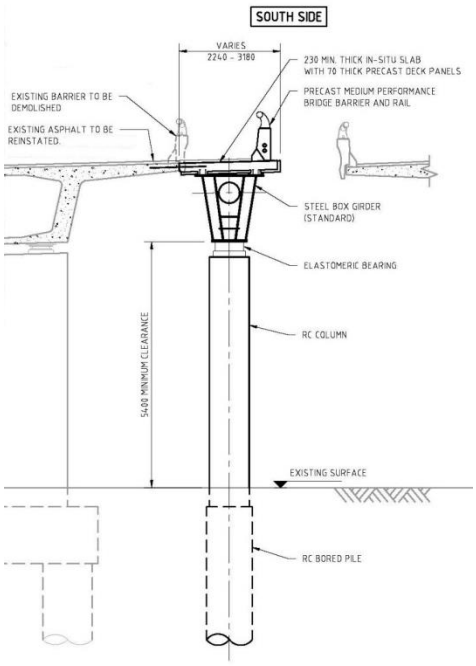

Figure 26 Standard Steel Box Girder

Substructure

The superstructure is continuously supported on a single reinforced concrete pier column, which in turn supported on either a single bored pile or precast driven piles and pile cap. All substructures are designed and constructed independently. The types of substructure included in this widening are categorised into four different types:

- Type 1 – Circular Pier/Pile Cap/Precast Driven Piles (see Figures 25)
- Type 2 – Eccentric Crosshead/Rectangular Pier/Pile Cap/ Driven Piles (see Figures 27)
- Type 3 – Circular Pier/Bored Pile (see Figure 26)
- Type 4 – Circular Pier/Pile Cap Straddle/Precast Driven Piles (see Figure 10)

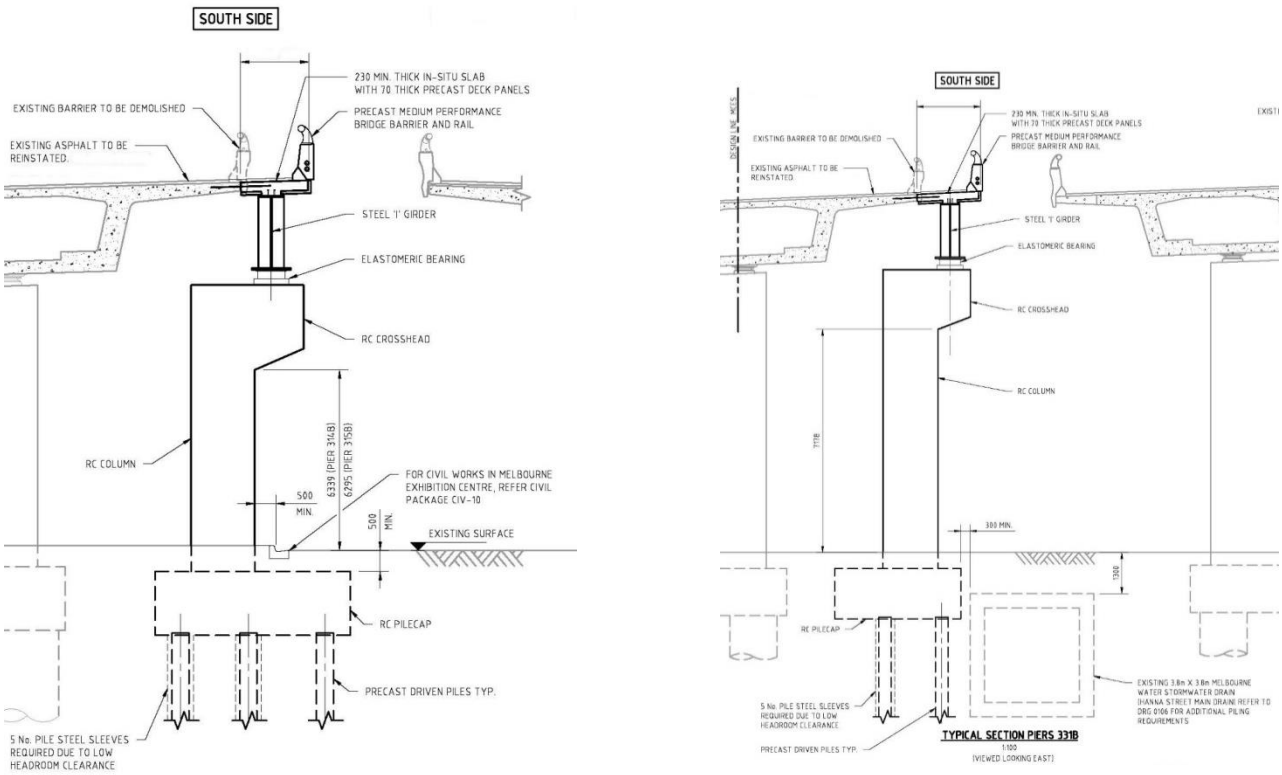

Figure 27 Eccentric Crosshead/Rectangular Pier/Pile Cap/ Driven Piles (Type 2)

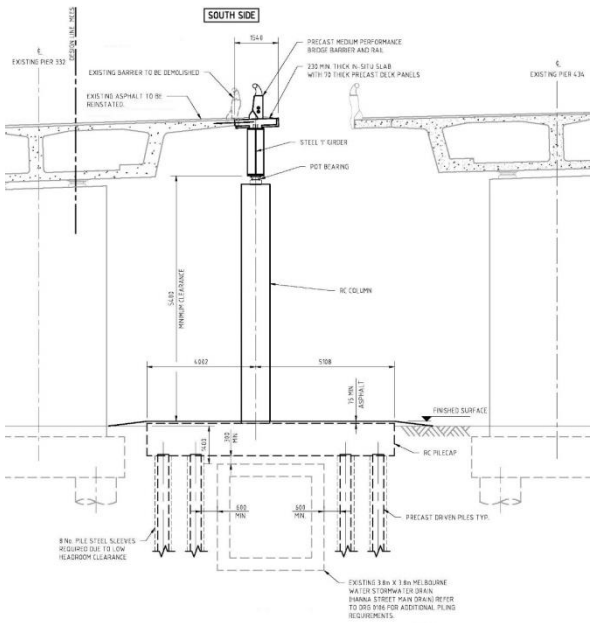

Figure 28 Circular Pier/Pile Cap Straddle/Precast Driven Piles (Type 4)

Due to the close proximity to the existing gas mains, water mains and stormwater drain, provision of over-sized pre-bore is required for the installation of the precast driven piles. The pre-bore diameter shall be equal to the pile diagonal minus 50 mm. The annulus between the pre-bore diameter and pile segment shall be fully back grouted to ensure the pile perimeter is in full contact with the surrounding ground. The required depth of pre-bore shall be assessed on a case-by-case basis taking into account the arrangement of

the adjacent existing underground utilities. Provision on the piling vibration limit for piling works at each of these piers is also required and provided below.

CONCLUSION

CityLink Tulla Widening projects is an excellent example of fitting new works within a busy existing road corridor. The examples presented in this paper illustrate a range of conditions encountered by the bridge designers in achieving the required project outcomes within the constraints of an existing true brownfield site. Many of the design decisions associated with structural works on this project were heavily influenced by the need to accommodate the existing traffic and associated highway works, and to suit construction staging under operating live traffic. The integration of design and construction has been an essential part of the success of this project. The successful delivery of design and construction of this project demonstrated that innovation and ingenuity supported by a strong working relationship between designer, contractor and client can progressively solve challenges and achieve outstanding project outcomes.

ACKNOWLEDGEMENT

The authors wish to acknowledge the incredible working relationship with Aurecon GHD Joint Venture (AGJV), CPB Contractors, Transurban and VicRoads throughout the design development. The views expressed in this paper are those of the authors.

REFERENCES

- Standards Australia, “AS5100 Bridge design: Parts 1 -7”, Standards Australia International, 2004, Sydney, Australia.
- Hambly, E.C, “Bridge Deck Behaviour”, 2nd Edn, Chapman & Hall, 1990, London, England.