Design and Construction of the Nan-Tien Pedestrian Bridge, a Continuous Super-T Bridge over Princes Motorway.

James Nasr, Senior Bridge Engineer, Cardno

ABSTRACT

The Nan-Tien Pedestrian Bridge project involved the design, construction and commissioning of a new pedestrian footbridge over Princes Motorway near Wollongong NSW to link the Nan-Tien Buddhist Temple on the South side of the motorway with the recently built NanTien Institute on the North side of the freeway. One of the main guidelines for the overall Nan-Tien Institute development plan was to support and inspire learning and the pursuit of research and creative practice within a Buddhist framework. In this context the pedestrian bridge is the entry statement and the first architectural feature. Therefore, the aesthetics of the bridge, the incorporation of landscaping areas and a flowing safety screen were important.

The large center span of the 112m long bridge required the preferred Super-T girders to be made continuous and integral with the piers. This presented various challenges for the design and construction of the bridge, the temporary works and the approval process. The main project challenges are discussed in this paper.

1 INTRODUCTION

1.1 History of design

The International Buddhist Association of Australia initially considered an expansion of their Nan Tien temple facilities in 2006 to provide a new campus. Available space for this extension and the temple location are separated by the M1 Motorway south of Wollongong. The vision was to provide a comfortable connection between the facilities, with architectural emphasis to provide an integrated urban and landscape design. Conybeare Morrison (CM+) was appointed as architects for this design. Utility issues delayed the project for a number of years and the detailed design was undertaken between 2013 and 2015. In 2017 the project moved into the construction phase and the bridge was completed in the middle of 2018.

The connection was planned as a pedestrian only bridge. Acknowledging the specific urban design requirements, it was planned to be extra wide so as to provide green spaces and rest areas on the bridge.

1.2 Clients

The International Buddhist Association of Australia is the owner and main client for the Project. Initially Conybeare Morrison (CM+) provided conceptual architectural designs with Cardno covering the bridge design. Utility constraints and the consequent design and construction of diversions, resulted in causing long delay to the project and re-grouping.

In 2013 the Buddhist Association engaged APP Corporation Pty Ltd to project manage the design and construction of the pedestrian bridge. APP engaged Cardno to develop the design to 100% stage which included both bridge and civil design. APP then called tenders for the construction of the pedestrian bridge.

In 2017 Project Coordination was engaged to construct the pedestrian bridge and the connections between the temple facilities on one side and the University Campus on the other side. Project Coordination engaged Abergeldie Complex Infrastructure as the bridge contractor.

1.3 Other parties

The architect for the final urban and bridge solution was Woods Bagot with Cardno designing the main bridge.

The adjoining structural connections to the Temple and Campus area, respectively, were designed by Calibre.

Proof engineering up to 100% was provided by Arcadis. Final review and verification was provided by SMEC Australia.

Roads and Maritime Services (RMS), as operator of the M1 Motorway, was one of the main stakeholder in the project and specifically requested the large main span, to eliminate the central support so as to reduce safety concerns for motorists using the M1 Motorway.

2 DESIGN

2.1 Concept Design

2.1.1 Original Concept

Initial discussions on the architectural / structural concept resulted in the concept to provide a wide Superstructure to achieve the best comfort for users. The proposed width of the pedestrian way was approximately 12m and comprised a walkway and green areas. The substructure and bridge underside represented a utilitarian design using precast, prestressed beams.

The main structure at this stage was a 5 span configuration with spans of approximately 25m and an overall length of 125.4m. The span arrangement allowed for a connection to the Temple from the top of the embankment on the southern side. The design of the connection into the new University campus was still under discussion at this stage but would require additional suspended structure. The spans and structural depth of the main bridge allowed for a simply supported construction with the girders intended to be supported on elastomeric bearings. The span arrangement is illustrated in the following sketch.

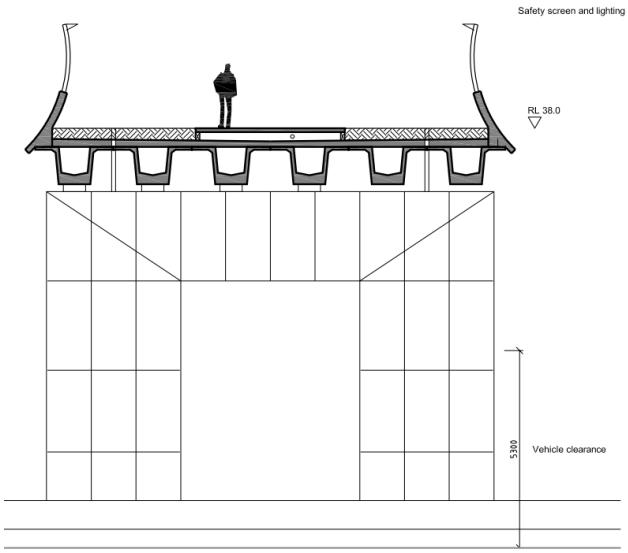

Figure 1 Original Concept Cross Section

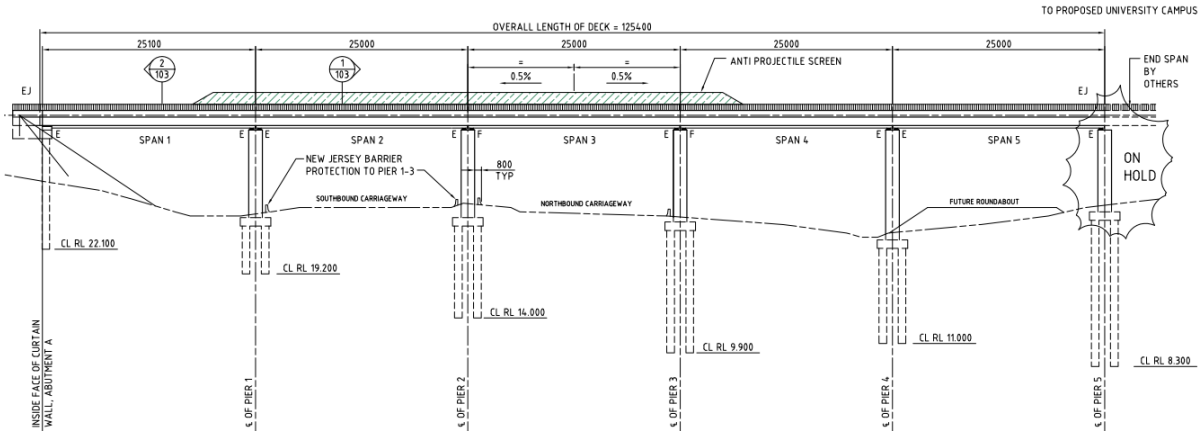

Figure 2 Original Concept Elevation

Further development of the substructure with Wood Bagot resulted in a revised pier shape in the cross-sectional view. The bridge width reduced to 8m and also the number of Super T girders in the superstructure cross section reduced. The shape of the pier in the cross-sectional view featured sloping sides to provide a slimmer look.

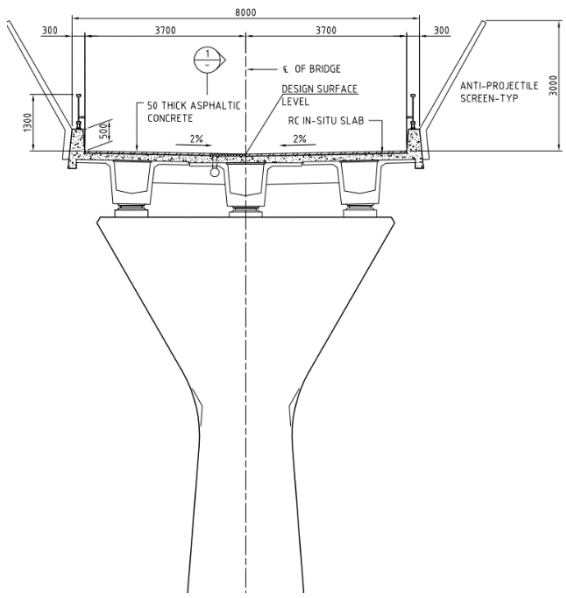

Figure 3 Developed Concept Cross section

2.1.2 Revised Concept

The bridge design was subsequently refined with specific emphasis on achieving a long centre span with appropriate side spans. The long centre span was to eliminate the pier between the two carriageways. The resulting span configuration comprised three spans of 31m, 45.6m and 35m, with an overall main bridge length of 113.2m. The main reason for the large central span and the elimination of the pier between carriageways was to improve safety and was a requirement of RMS.

For the suspended structure that adjoined the side spans, it was planned to use shorter precast plank spans with approximate overall lengths of 33m on the southern side and 27.6m on the northern side.

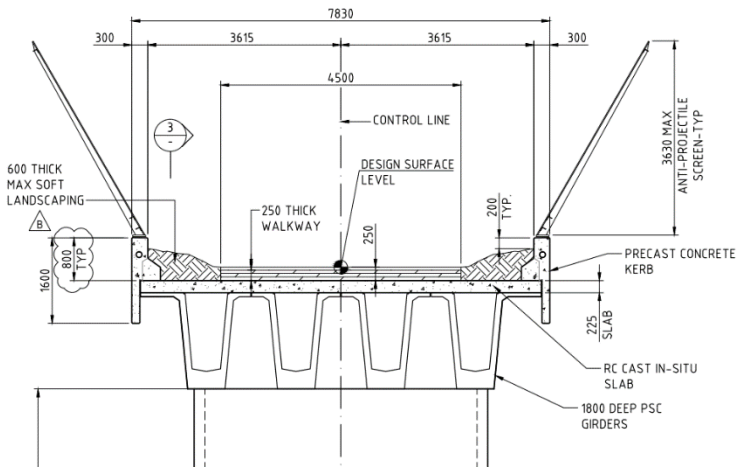

Figure 4 Revised Cross Section

Initially, it was considered that this span arrangement, with a central span over the motorway exceeding 40m, would require a composite steel girder superstructure. However, during further discussions with stakeholders, it was emphasized that the bridge structure should require low maintenance and there were concerns that a steel superstructure would require greater ongoing maintenance than a concrete structure. A concept was subsequently developed that utilized precast, prestressed Super T girders which were made continuous at, and integral with, the intermediate piers by using cast in-situ infill pours between the Super T girders at the piers. Another advantage of the integral construction is that the number of bearings in the structure was minimized as they are only required at the ends of the side spans (at Piers 1 and 4). Overall, this structural configuration provided a slim and well-proportioned span arrangement which achieved a light appearance from the motorway.

The cast in-situ infill pours between the Super T girders at the piers was 3m long (in the longitudinal bridge direction). The concept therefore required 43.6m long Super T which are approximately 5m longer than the length limit for simply supported girders given in RMS Bridge Technical Direction 2011/06.

To achieve the larger span four Super T girders were required and the pier shape was changed once more to suit the integral construction. The revised cross section is illustrated in Figure 4.

2.2 Detailed Design

2.2.1 Substructure

The further developed substructure design to suit the continuous, integral connection at the top of the piers resulted in a blade type pier with a constant cross section. Each end of each blade pier was rounded and incorporated a vertical groove, a feature that would be seen from the motorway. All piers were supported on pile caps. Based on the geotechnical model known by that time, the design of Piers 1 and 4 required one row of three piles while Piers 2 and 3 each required two rows of three piles.

Since Piers 1 and 4 acted as transition piers to the adjacent plank structure, abutments were not part of Cardno’s design scope. The layout of Pier 2 is illustrated in Figure 5 below.

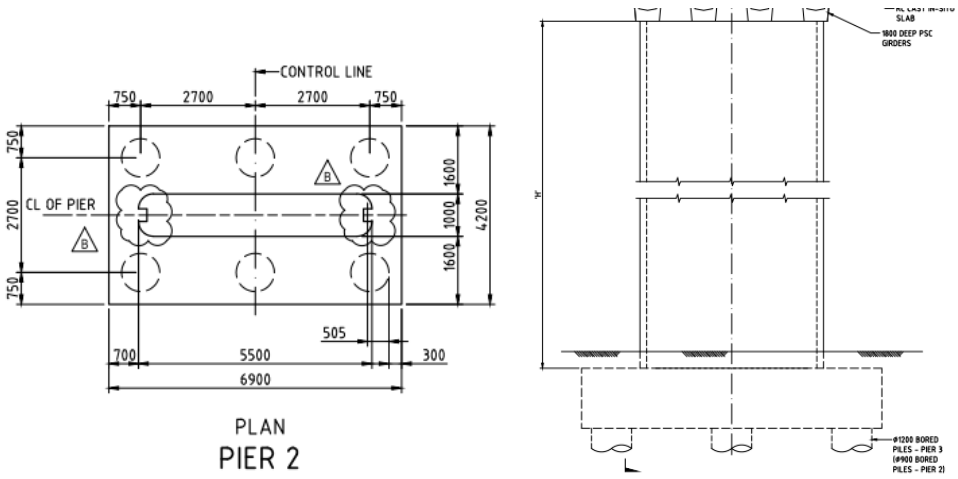

Figure 5 Pier 2 Details of the arrangement at 100% design

2.2.2 Superstructure

The final superstructure design recognised that the required strength of the long central span was significantly greater than for side spans. As such, the side spans were designed with three 1800mm deep Super T girders, while the main span had four 1800mm Super T girders. The walkway area and soft landscape widths were optimized as indicated by the cross section shown in Figure 6.

A further change was required by RMS to meet the requirements BTD2012/01 - Provision of safety screens on bridges. As a result, the inclined safety screens, which were at an angle of 45°, were revised to have just a very small tilt.

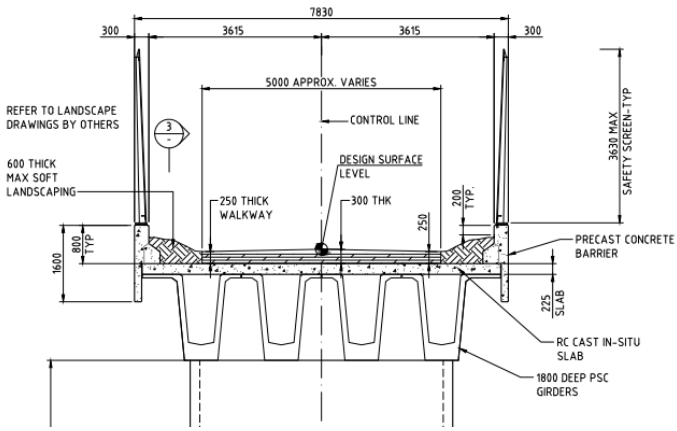

Figure 6 Cross Section with revised safety screens

For the superstructure design, it was important to accurately model the effects of the continuous, integral construction. Consequently, the progressive changes to the structure at each key construction stage were modelled, starting with the simply supported girders after erection. The subsequent stages included the construction of the cast in-situ infill pours at the pier heads and the subsequent creep of the superstructure which resulted in reduced sagging moments at mid-span and the development of a hogging moment over the piers. The loading for superimposed dead load, including landscaping, live load and ongoing creep and shrinkage were modelled. As typical for continuous structures, these loads also cause hogging moments over the piers.

Temporary Works

For the integral construction, the temporary supports and the sequence of loading are key considerations. As a result, a construction program was developed during the design phase, on which the detailed design calculations were based. It was critical to reduce the hogging moments over Piers 2 and 3 as much as possible and to ensure the superstructure did not sag in the long term due to secondary effects. The following construction sequence was therefore defined:

1) Construct substructure and erect girders on temporary supports (simply supported).
2) Cast the in situ topping slab in the middle of the main span.
3) Cast in-situ infill pours at each pier head to connect the two girder spans and the pier.
4) Finalize slab and construct bridge furniture.

The staging requirements are illustrated in Figure 7 below.

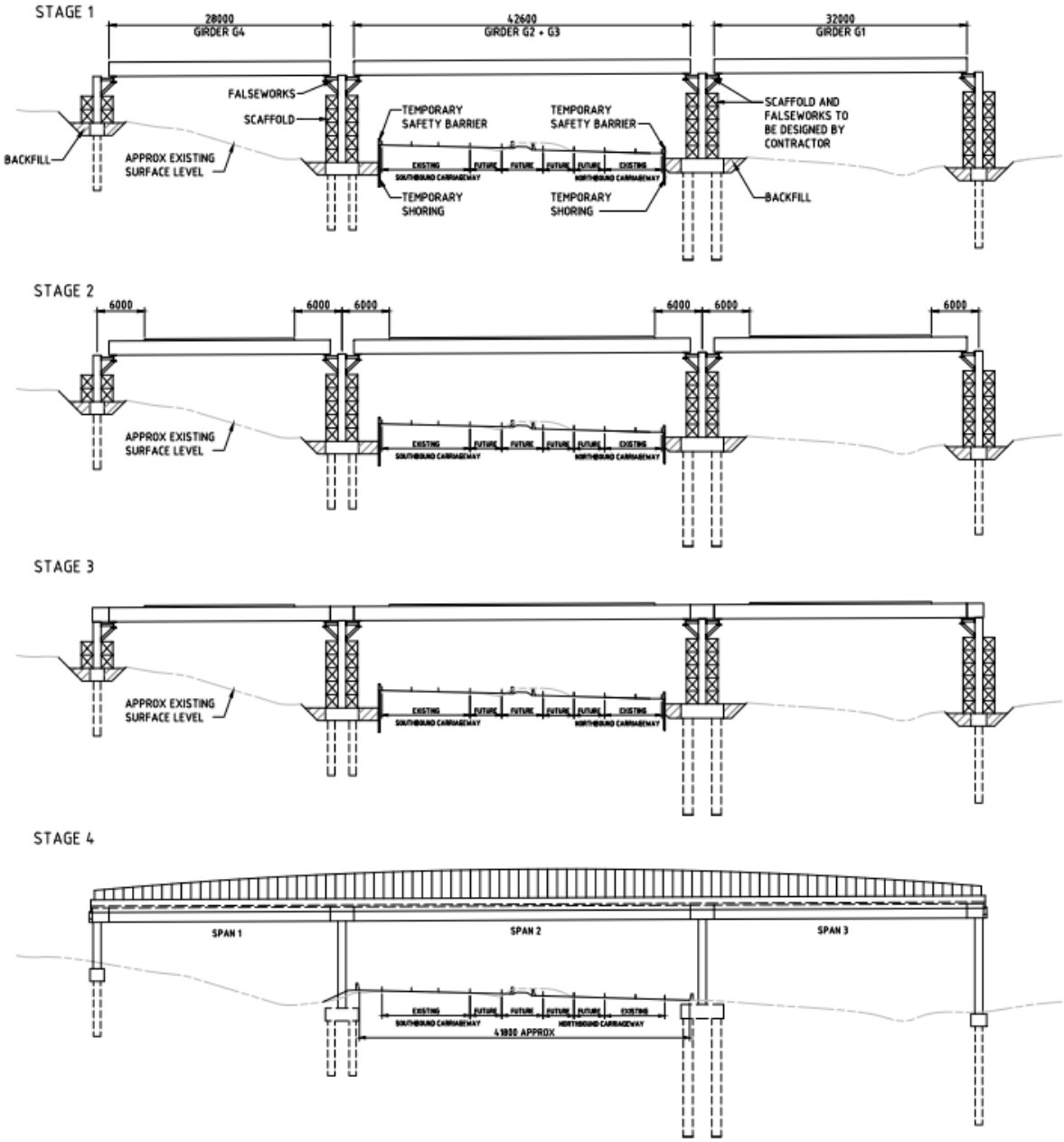

Figure 7 Staging requirements for balanced, integral construction

3 CONSTRUCTION

3.1 Construction companies / Interface

From early 2017 the project moved into the construction phase. The International Buddhist Association of Australia had appointed APP as project managers. The successful tenderer was Project Coordination Pty Ltd who acted as principal contractor. Abergeldie Complex Infrastructure was appointed for construction of the pedestrian bridge. The main stakeholders for this phase were Roads and RMS and Wollongong City Council.

Coordination was required between Cardno and Calibre, the designer of the adjoining suspended structure, for the design of Piers 1 and 4 where the superstructure changes from precast, prestressed planks to Super T girders. Both superstructure types are simply supported on bearings at these piers.

3.2 Design changes

At the early construction stages, the construction contractors saw opportunities to facilitate construction by some changes to the design and these were discussed.

3.2.1 Pile configuration

The original detailed design comprised piled foundations with two rows of piles for Piers 2 and 3. This number of piles required a sizeable pile cap and the need to work close to the motorway, necessitating lane closures. On review of the design, and considering information from additional geotechnical investigation that had been carried out, Cardno was requested to investigate the possibility of reducing the number of piles so that there would only be a single row and a much more compact pile cap. The impact on the motorway would be considerably reduced. Due to the nature of the integral structure this change required investigating the effects on the entire main bridge. With new geotechnical design parameters from the additional investigation, it was found that this change was possible and was adopted. The revised solution is shown below in Figure 8.

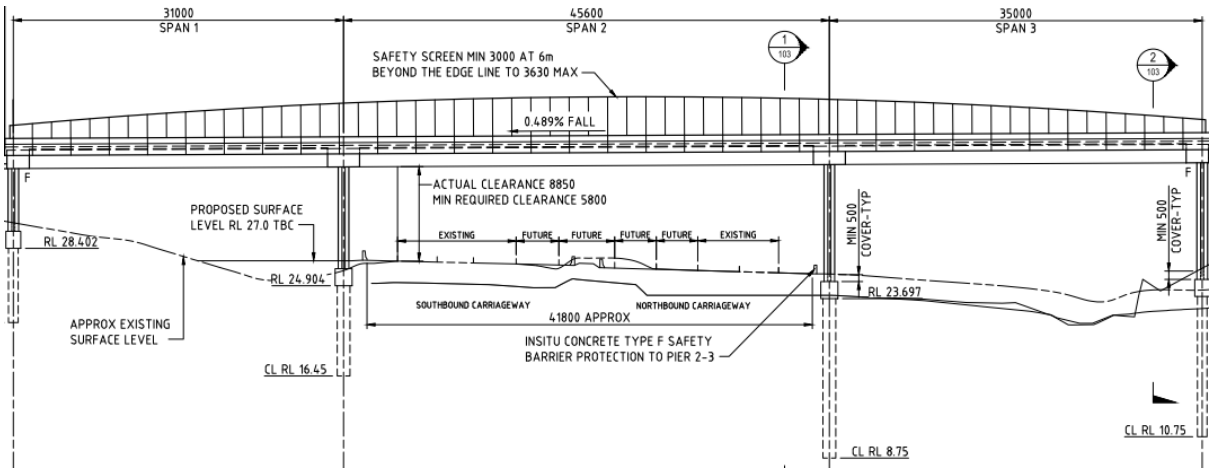

Figure 8 Revised Pile Foundations

This change, however, also had an impact on the construction engineering and temporary works as the smaller pile cap would not provide foundations for the temporary supports mentioned in Section 3.2.2.

3.2.2 Temporary support bracket

For construction of the 3m long cast in-situ connection, the Super T girders first needed to be supported. The initial design specified propping from the larger pile caps. Due to the reduction in the number of piles and pile cap size, it was no longer feasible to prop off the pile caps and the ground conditions were considered unsuitable to support these props directly on the ground. As a result, support brackets were introduced that were clamped to the piers using tensioned high-tensile steel

bars. Whilst a positive effect of this change to the piled foundation was a reduced impact on the motorway, the additional unbalanced loads during Super T erection on the piers at a high level had to be considered and the strength of the pier was checked. Minor adjustments to the pile and pier reinforcement were required to achieve adequate strength at the intermediate construction stages.

3.3 Challenges during construction

The revised design to support the Super T girders of the central span off brackets resulted in challenges during construction. During the pier construction, provision had to be made for constructing and attaching the brackets. It was critical to ensure that the bracket system was rigidly connected to reduce any movements during casting of the pier head. Consequently, the brackets were stressed against the piers so as to transfer the load to them by friction. The brackets had to support the girders for several weeks until the superstructure was finalized. Then, the brackets were able to be removed. A photo of the brackets is shown in Figure 9.

Figure 9 Support brackets

Erection of the Super T girders was the critical step of the bridge construction. With a length of 42.6m and a weight of more than 90t, lifting and handling of the girders and positioning them on the support brackets required careful planning. Considering the risk for motorway users and to provide safe access the M1 Motorway was fully closed for 10hrs for the installation of the four central span Super T girders. The lifting regime required a two crane setup with a static mobile crane and a moving crawler crane. A photo of the Super T girder lifting arrangement is included in figure 10.

Figure 10 Dual Lift of Super T Girder

4 CONCLUSION

Overall, the Nan Tien Pedestrian Bridge Project demonstrates the opportunity to utilize well known construction techniques (Super T girders) for an integral bridge to achieve a slim, elegant structure which has low maintenance requirements. The key feature of this project is the long main span over the motorway. For the International Buddhist Association of Australia, the focus was a lively connection between the temple and the campus which was achieved as demonstrated in the picture in Figure 11.

Figure 11 View of the pedestrian bridge

5 ACKNOWLEDGEMENTS

We thank the International Buddhist Association of Australia, Project Coordination and Abergeldie Complex Infrastructure for the opportunity to present this paper.

6 AUTHOR BIOGRAPHY/IES

Peter Boesch is Manager Bridges / Regional Senior Principal with Cardno (NSW/ACT) Pty Ltd. Peter has over 19 years' experience as a Structural Design Engineer. He has studied in Germany and England. He has worked in Germany and Australia and his experience covers mainly bridge projects with corresponding design of roads and other structures. Additionally, he has experience as a Technical Advisor to lending banks for Public Private Partnership ('PPP') Projects. Beside his management role at Cardno, Peter has been structures lead and design manager on various projects including the Legacy Way project in Brisbane and the Nelligen Bridge Project on NSW's South Coast. On the NanTien Bridge project Peter was the project director for Cardno.

Mike Kirumba is Senior Bridge Engineer with Cardno (NSW/ACT) Pty Ltd. Mike joined the Bridges team of Transport NSW/ACT in June 2016. He specialises in bridge design and construction having over 18 years' experience in major infrastructure projects. Mike is capable of producing procedural and technical documentation to a high standard. Mike has worked on site as a design and build site engineer, as the designer's representative and as the client's representative. Hence he has experience of projects from conception to completion.