Differential Protection Principle

Differential Overcurrent Protection

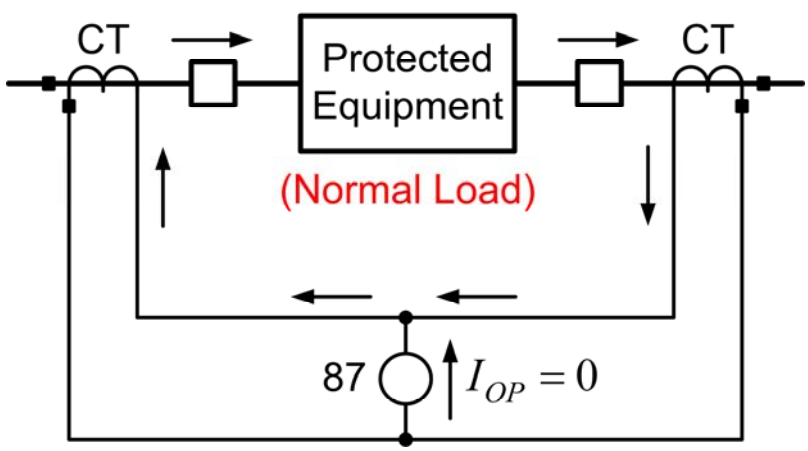

Differential Overcurrent Protection

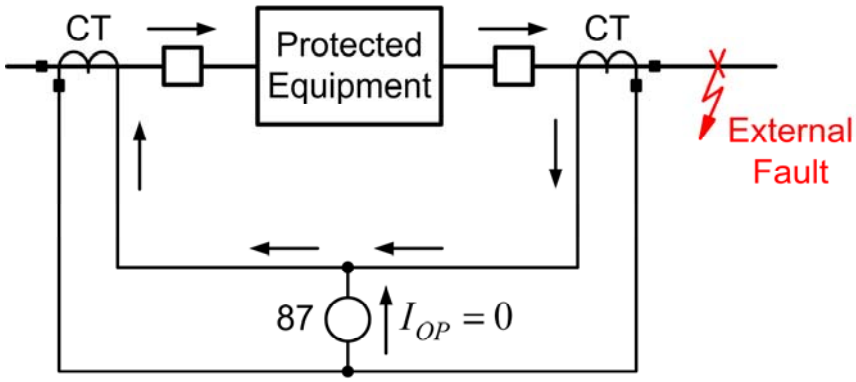

No Relay Operation If CTs Are Considered Ideal

Differential Overcurrent Protection

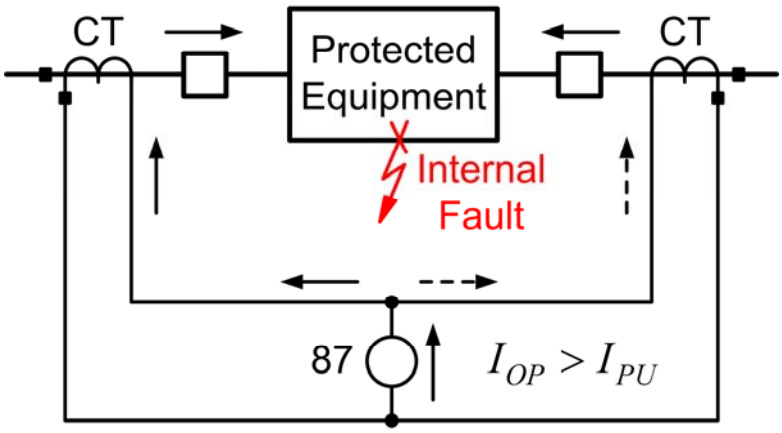

Relay Operates

Unequal CT Saturation

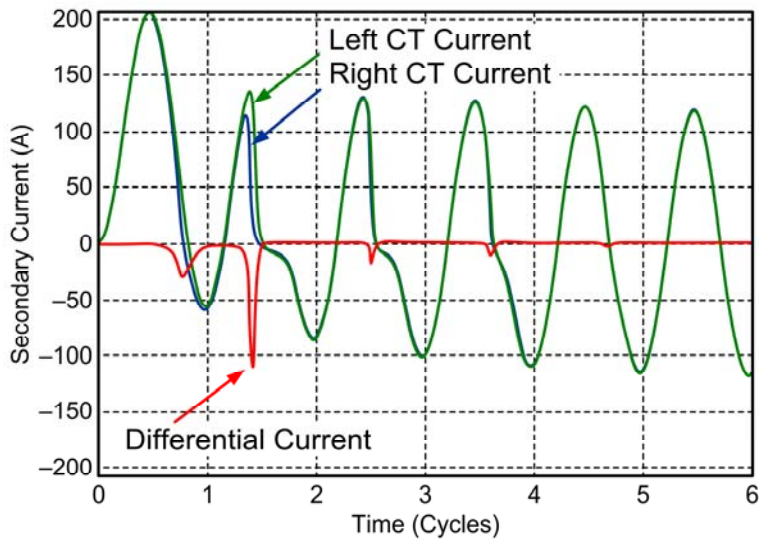

Problem of Unequal CT Performance

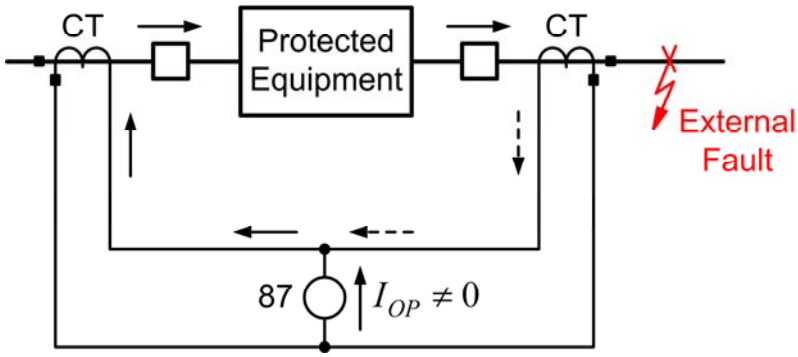

- CT saturation causes error differential current for external faults
- Resulting high element pickup limits sensitivity

Percentage Differential Protection

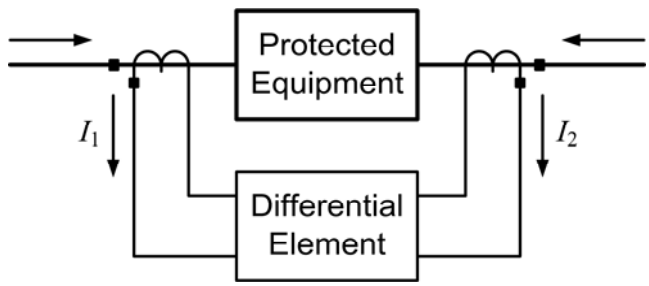

Compares I_{OP} with I_{RT}:

$$I_{OP} = |\bar{I}_1 + \bar{I}_2| \qquad I_{RT} = k\,|\bar{I}_1 - \bar{I}_2|$$

$$I_{RT} = k\left(|\bar{I}_1| + |\bar{I}_2|\right) \qquad I_{RT} = \mathrm{Max}\left(|\bar{I}_1|, |\bar{I}_2|\right)$$

Percentage Differential Single-Slope Characteristic

Operation: $I_{OP} > I_{PU}$ and $I_{OP} > SLP\ I_{RT}$

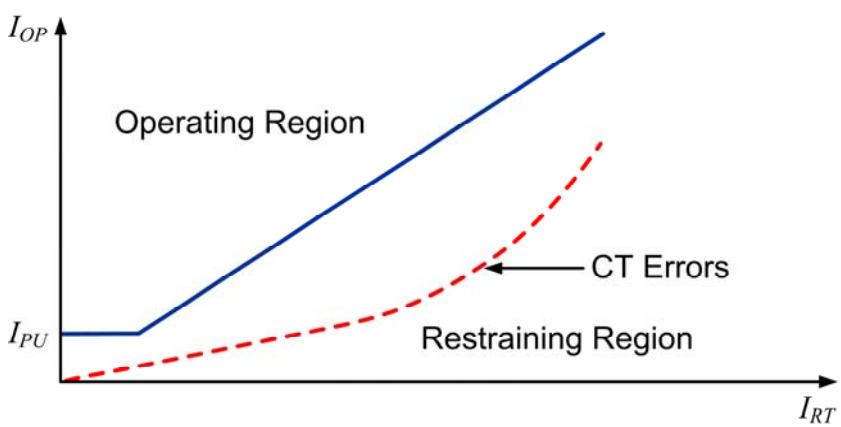

Percentage Differential Dual-Slope Characteristic

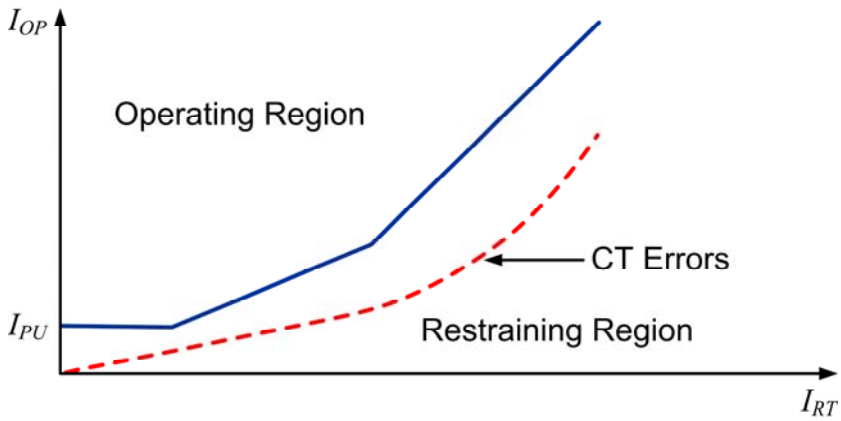

Adaptive Percentage Differential Characteristic

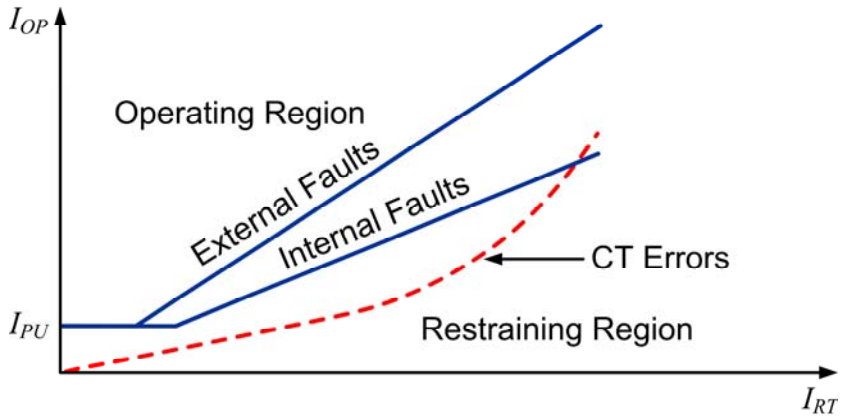

Challenges of Transformer Differential Protection

- CT saturation
- Current magnitude mismatch
- Current phase shift across the transformer
- Zero-sequence current sources
- Magnetizing inrush currents
- High excitation current on overexcitation

Transformer Connections

Common Two-Winding Transformer Connections

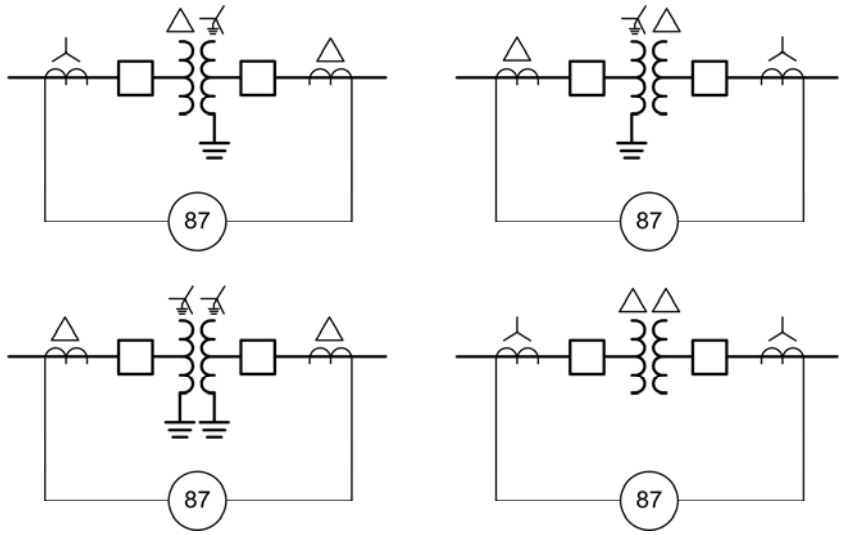

DABY or Dy1 Transformer Connection

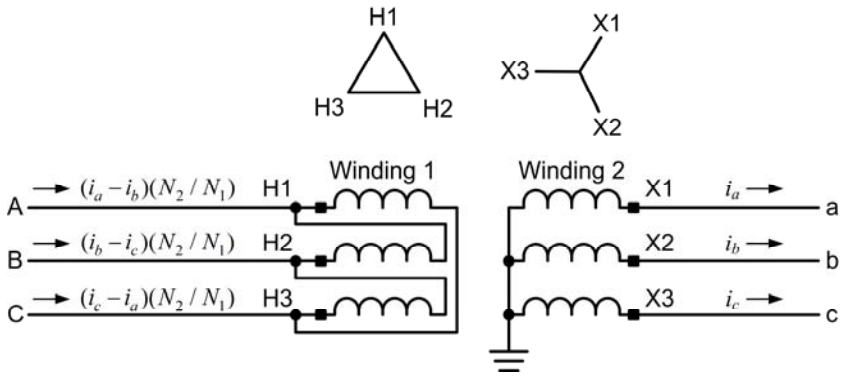

$$\left(\bar{I}_a - \bar{I}_b\right)\left(N_2/N_1\right) = \sqrt{3}\bar{I}_a\left(N_2/N_1\right)\angle 30^\circ$$

YDAC or Yd1 Transformer Connection

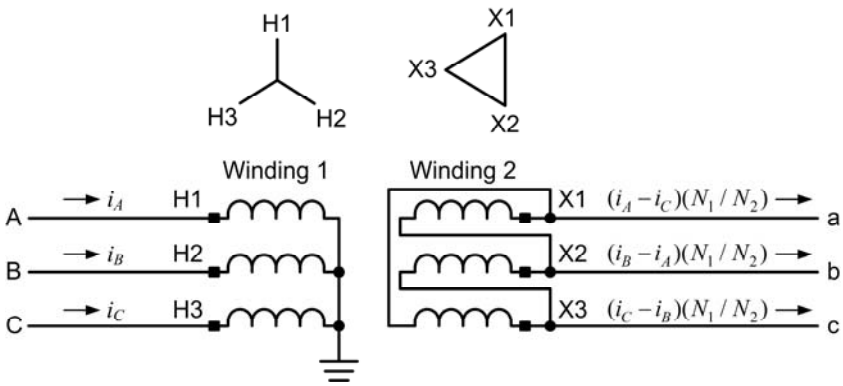

$$\bar{I}_A(N_1/N_2) = \left(\frac{\bar{I}_A - \bar{I}_C}{\sqrt{3}}\right)(N_1/N_2)\angle 30°$$

Current Scaling and Phase-Shift Compensation

Traditional Compensation

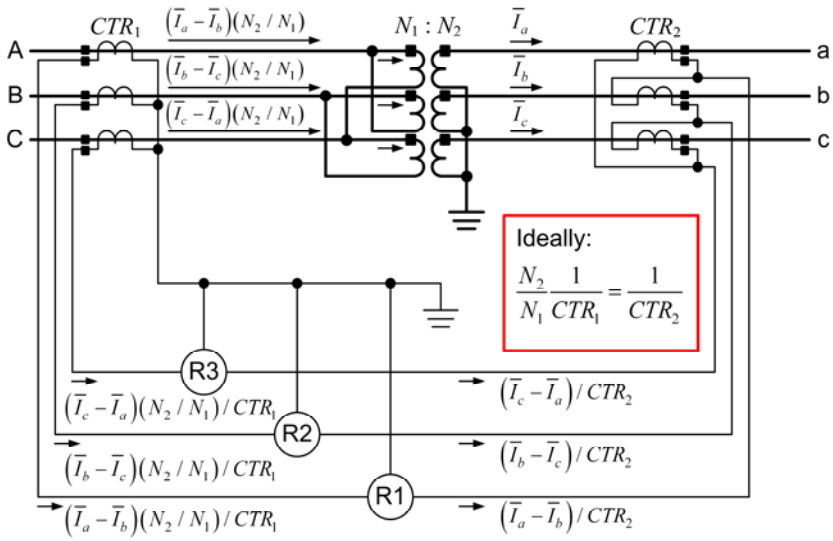

Traditional Compensation Is Not Perfect

Desired CT ratio relationship:

$$\left(\frac{N_2}{N_1}\right)\left(\frac{1}{CTR_1}\right) = \frac{1}{CTR_2}$$

$$CTR_2 = \left(\frac{N_1}{N_2}\right)CTR_1 = \sqrt{3}\left(\frac{V_1}{V_2}\right)CTR_1$$

- Not always possible with standard CT ratios
- Electromechanical relays have taps
- Compensation is not perfect

Mismatch Calculation for Electromechanical Relays

$$\text{Mismatch} = \frac{\left| \frac{|\bar{I}_1|}{|\bar{I}_2|} - \frac{TAP_1}{TAP_2} \right|}{MR} \bullet 100$$

$$MR = \min\left(\frac{|\bar{I}_1|}{|\bar{I}_2|}, \frac{TAP_1}{TAP_2} \right)$$

Compensation With Digital Relays

Digital relays carry out current scaling and phase-shift compensation internally

- Exact current scaling
- Phase-shift compensation for all transformer connections
- Wye CT connection is allowed

Current Scaling With Digital Relays

Digital relays can fully compensate for the current amplitude differences

$$TAP_n = \frac{1{,}000\, S_{MAX} C_n}{\sqrt{3}\, V_n CTR_n}$$

Digital Relays Allow Connection of CTs in Wye

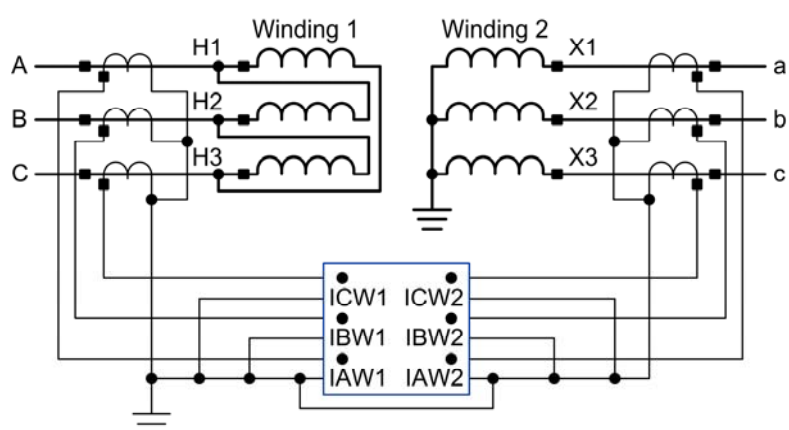

Current Scaling and Phase-Shift Compensation

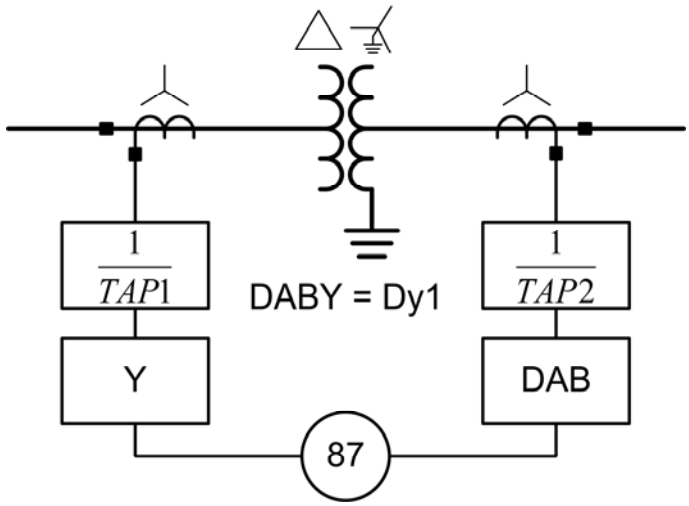

DAB Connection Compensation

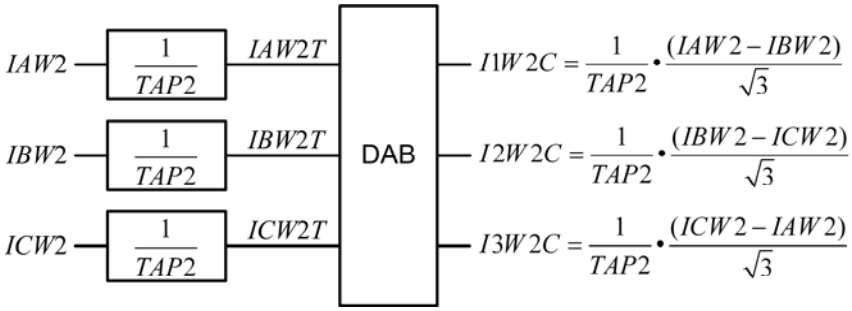

$$\begin{bmatrix} I1W2C \\ I2W2C \\ I3W2C \end{bmatrix} = \frac{1}{\sqrt{3}} \begin{bmatrix} 1 & -1 & 0 \\ 0 & 1 & -1 \\ -1 & 0 & 1 \end{bmatrix} \begin{bmatrix} IAW2T \\ IBW2T \\ ICW2T \end{bmatrix}$$

Wye Connection Compensation

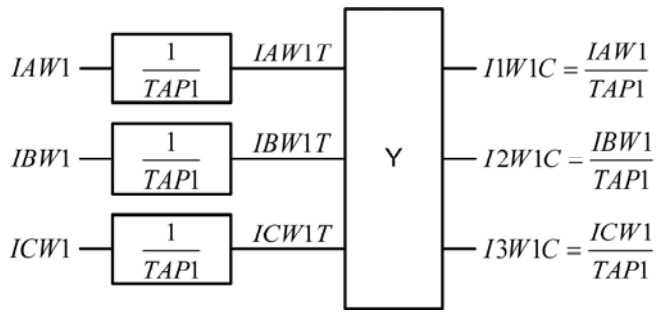

$$\begin{bmatrix} I1W1C \\ I2W1C \\ I3W1C \end{bmatrix} = \begin{bmatrix} 1 & 0 & 0 \\ 0 & 1 & 0 \\ 0 & 0 & 1 \end{bmatrix} \begin{bmatrix} IAW1T \\ IBW1T \\ ICW1T \end{bmatrix}$$

Zero-Sequence Current Removal

Zero-Sequence Current for an External Fault

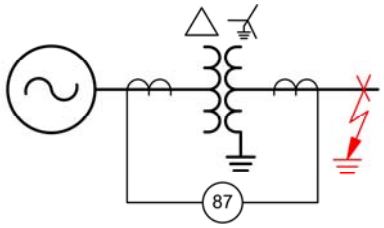

Delta compensation removes zero-sequence current

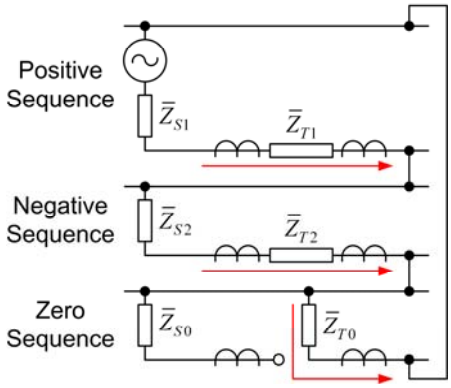

Restricted Earth Fault (REF) Protection

Transformer Currents for Internal Ground Faults

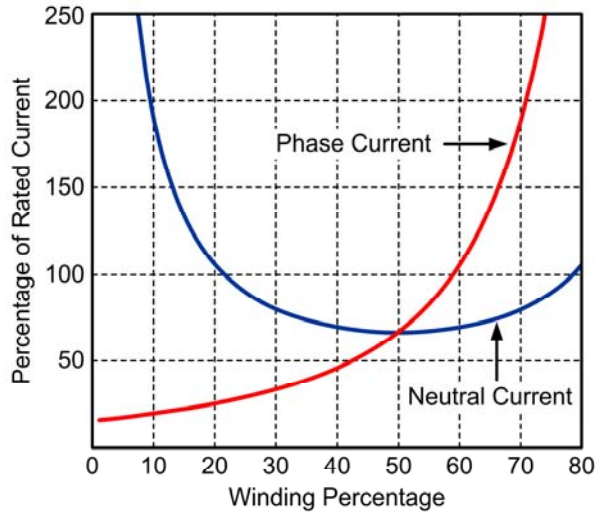

REF Protection for a Two-Winding Transformer

$$T = \mathrm{Re}\left[\overline{I}_X \bullet \overline{I}_Y^*\right]$$

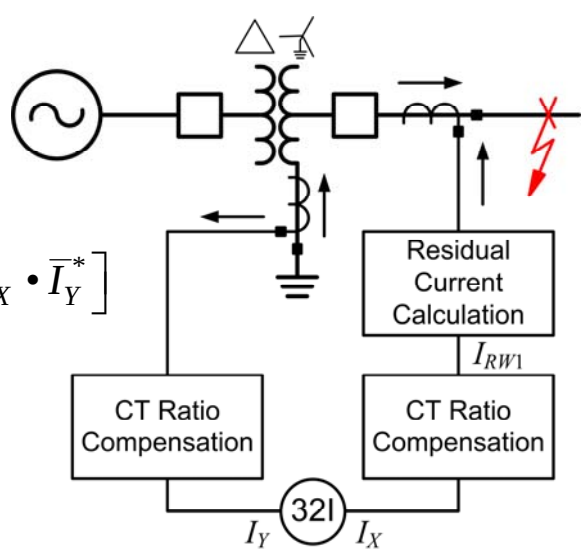

Overexcitation Protection

Overexcitation Protection

$$\varphi \propto \frac{V}{f} \bullet \frac{f_{NOM}}{V_{NOM}}$$

- Overexcitation occurs when *V/f* exceeds 1.05 (full load) or 1.1 (no load)
- Causes heating, high exciting current, vibration, and noise
- Volts/hertz (24) protection should trip the transformer