Substation Commissioning

Topics

- Project Overview
- Review Work Plan
- Substation Equipment Testing
  - Power Circuit Breakers
  - Power Transformers
  - Capacitors

Project Overview

- Reviewing the Work Plan
- Planning and Co-ordinating the Work Plan
- Communicating
- Verifying
- Testing
- Troubleshooting, Re-verifying, Re-testing
- Completing Project Documentation


Work
Safely

Review the Work Plan

- Identify what’s happening
- Who will be involved?
- Identify Responsibilities
- Review Project Documentation
- Develop Work Sequence

Power Circuit Breakers

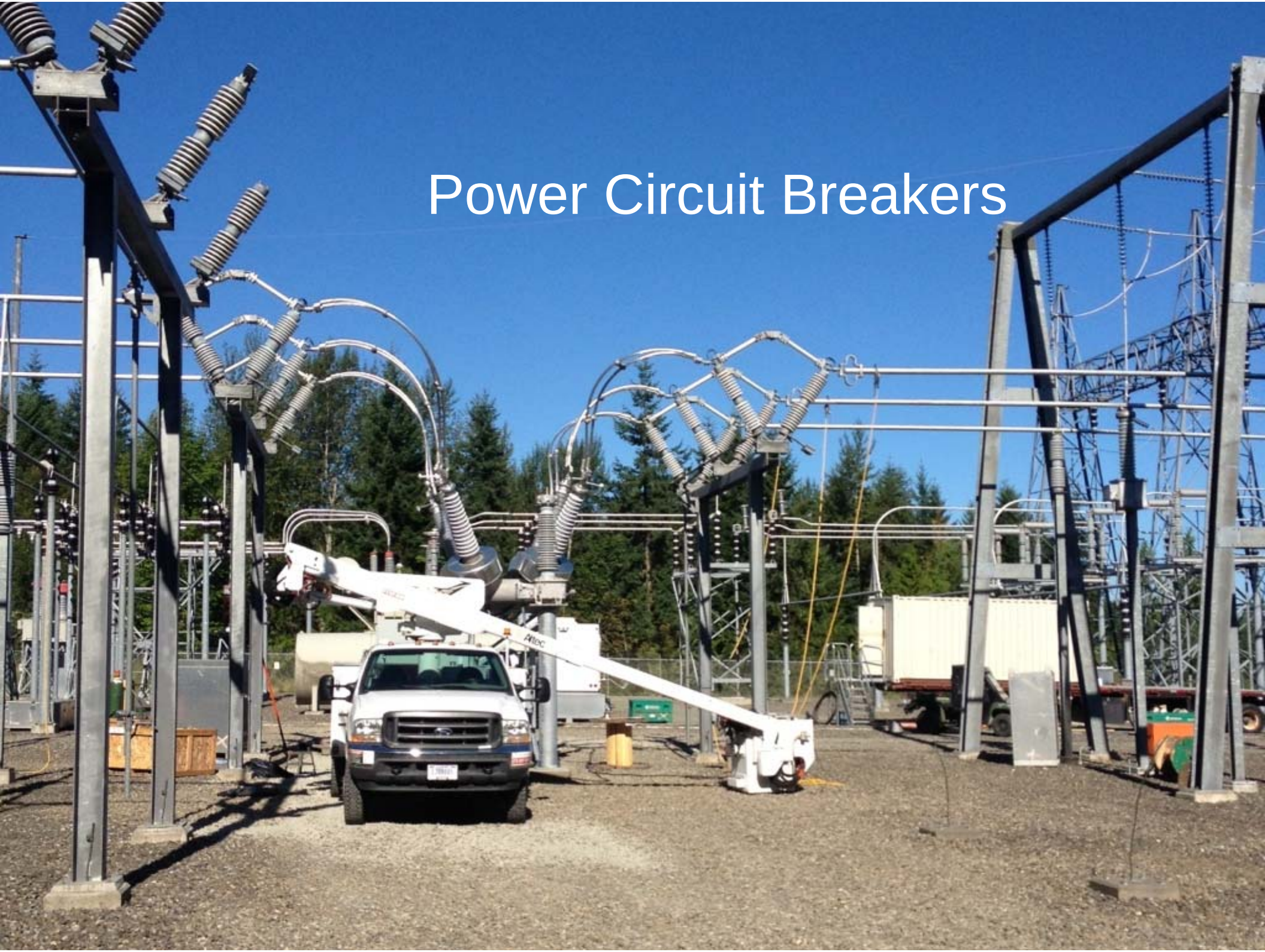

Power Circuit Breaker Guidelines

Record Nameplate Data

Verify Prints

Physical Orientation

Wiring & Jumpers

Measure Coils & Megger

Test CTs

Testing CTs

Ratio, Polarity, & Burden

Open Circuit Excitation

Buzz & Megger Cables

Terminate Hardwired Shorts on Spares

Verify CT circuits only grounded @ one point

Verify Shorting Bar is GROUNDED

Power Circuit Breaker Guidelines

Record Nameplate Data

Verify Prints

Physical Orientation

Wiring & Jumpers

Measure Coils & Megger

Test CTs

Gas Fill & Measure

SF6 Parameters

SF6 QUALITY PARAMETERS

1. **SF6 Purity (required diagnostic test):**
   - Reason for measurement: SF6 must have a certain level of purity to ensure two things: 1) interrupting capability of the breaker, and 2) dielectric strength across the open contacts.
   - **95.0% and above**: acceptable
   - **80.0% to 94.9%**: swap gas during next service (As per Ken Edwards: **Breakdown in SF6 Gas Mixtures.pdf, pg 9** shows that GIS can dielectrically operate as low as 80%; **CIGRE 360.pdf, pg 38** indicate that extinguishing capabilities for some types of mixed gas actually get *better* than for pure SF6).
   - **79.9% and below**: remove from service and swap gas

2. **SF6 Moisture (required diagnostic test):**
   - Reason for measurement: Moisture combines with switching byproducts to create hydrofluoric acid. This acid will cause dielectric issues across insulating surfaces inside the breaker (i.e.: interrupter support tube, nozzles). The amount of acid is related to the amount of moisture in the SF6.
   - **0 to 50 PPMv**: acceptable (new equipment, as per Brad Folden - 2009.12.04)
   - **0 to 200 PPMv**: acceptable (in-service equipment)
   - **201-400 PPMv**: perform gas dryout during next service
   - **above 400 PPMv**: remove from service & perform gas dryout

3. **SF6 Decomposition (not yet required for standard diagnostic testing):**
   - Reason for measurement: SO2 is an indication of oxides in the gas, and oxides come from metals in the breaker that are vaporized during arcing. Arcing occurs during current interruption, during a prolonged restrike on the main contacts or during a L-G fault. Measuring SO2 indicates two things: 1) possible damage to the interrupter main contacts (which will be confirmed with micro-ohm testing), or 2) a L-G fault inside a dead-tank breaker.
   - **0 to 250 ppm**: acceptable
   - **251-500 ppm**: recondition gas during next service (filter out byproducts)
   - **above 500 ppm**: Remove from service & process as faulted:
     - Contact TESM to discuss results.
     - Request SF6 emergency response trailer & personnel through Dennis Pelton.

- Follow existing process outlined in Sub Maint SG XI.D.1, "SF6 Handling" and perform an internal inspection.

Power Circuit Breaker Guidelines

Record Nameplate Data

Verify Prints

Physical Orientation

Wiring & Jumpers

Measure Coils & Megger

Test CTs

Gas Fill & Measure

Wiring Checks

Check Timing

Breaker Timing

Purpose: Verifies Breaker Contacts are Opening & Closing within acceptable time limits

Method: Measure Tripping & Closing Times

Analysis: Contact Velocities & Inter-pole Spread

Timing Checklist for 242 PMG Circuit Breakers

Date: _____	Circuit Breaker Manufacturer: _____	Breaker Serial Number: _____
Substation: _____	Line or Bus: _____	Tests Performed by: _____

Item to Check	Actual Value	Specified Parameters
Opening Time (2 Cycle)		13 to 19 ms
Opening Time for 3-Cycle Rating and 35 ohms		15 to 23 ms
Opening Velocity (mechanism fully charged)		8.8 to 10 m/sec
Inter-Pole Spread Opening		2.0 ms maximum
Closing Time*		50 to 65 ms*
Closing Velocity (mechanism fully charged)		3.8 to 4.9 m/sec
Inter-Pole Spread Closing		3.0 ms maximum
Reclose Time		20 cycles minimum
Close-Open Contact Dwell Time		35 ms maximum
Close-Open Travel Distance		185 mm minimum

CLOSE speeds are calculated from 55 mm of travel to 45 mm differential
OPEN Speeds are calculated from 65 mm travel to 75 mm differential

***Notice:** *SUBTRACT 8-10 ms for the Pick-Up Time of the X-Relay if close timing tests are performed with the X-Relay in the circuit.*

Time & Travel for Close (Contact Velocity)

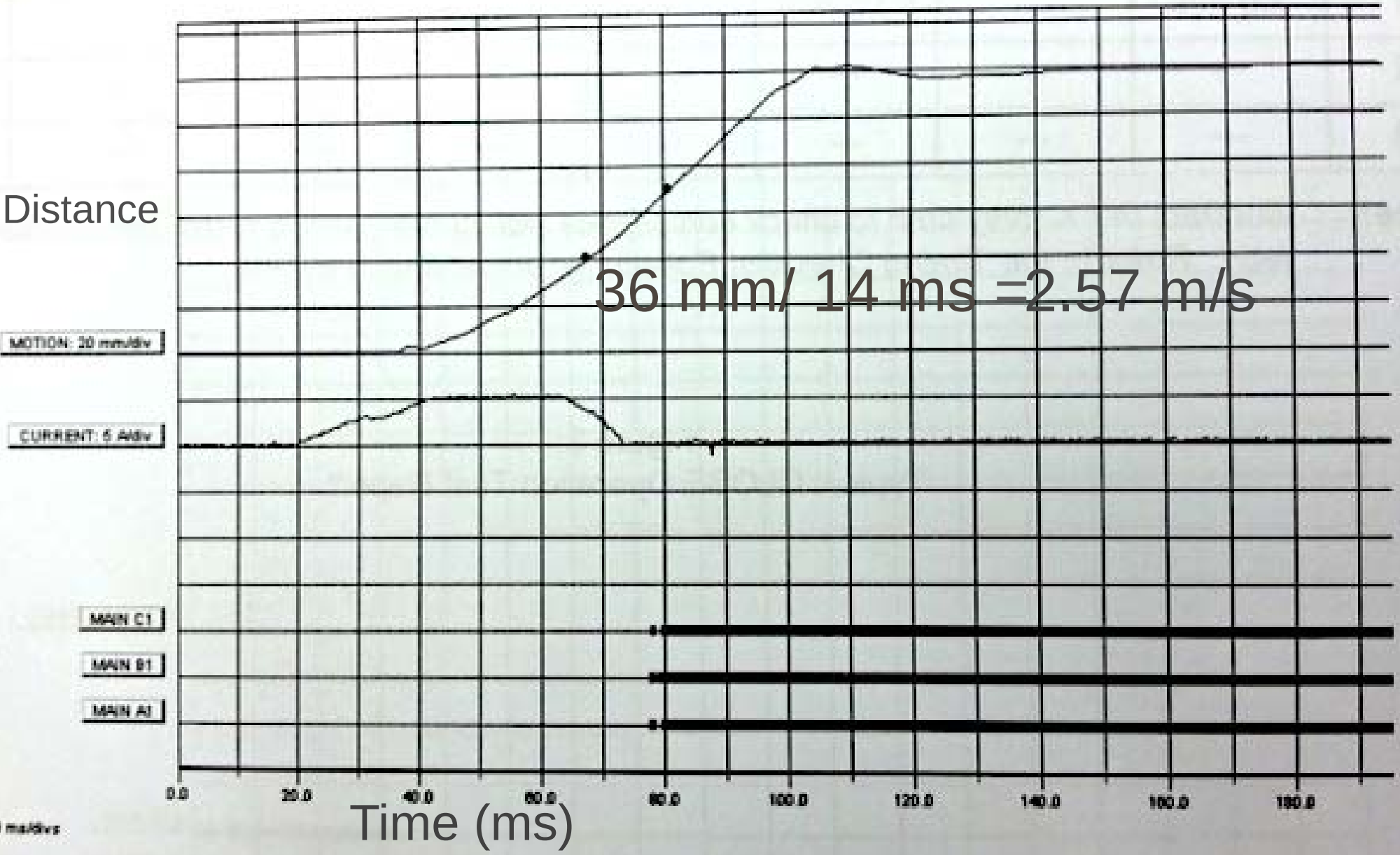

Breaker Timing Test Plan

Trip (Both Trip Coils)

Close w/ X Coil Included

Close w/ X Coil Excluded

Reclose using each Trip Coil

Trip-Free using each Trip Coil

Breaker Timing

PCB Open	PCB Closed
Start w/ a Close Shot	TC1 Reclose
Trip & Trip Free on TC1	App note 7 close
	(Move leads to TC2)
	App note 7 reclose w/TC2 connected
Trip & Trip Free on TC2	

All done with only 8 operations

Power Circuit Breaker Guidelines

Record Nameplate Data

Verify Prints

Physical Orientation

Wiring & Jumpers

Measure Coils & Hand Megger

Test CTs

Gas Fill & Measure (after 24 hrs)

Wiring Checks

Check Timing

Primary Contact Resistance

Energy Storage Checks

Energy Storage Systems

Spring Pressure Rundown Checks

Spring Discharge

Low Spring Alarm

Operation Block

Motor Start/Stop

Overnight Sag

Energy Storage Systems

Gas Density Checks

Temperature Compensated
SF6 Purity & Moisture

Millivolt Drop, Gas Pressure Switches, and Moisture Content

Millivolt drop

Nameplate: **120** (μΩ)

Phase	Current	Volts (mV)	Resistance (μΩ)
A	100 A	N/A	
B	100 A	N/A	
C	100 A	N/A	

SF_6 Gas Density Monitor Settings

Temperature: **68** °F 20.0 °C

Contact and Function	Nameplate @ 68 °F	Temp Adjusted Nameplate	A PH	A Reset	B PH	B Reset	C PH	C Reset
Nominal								
63-2C (ALARM)								
63-2B1 (BLOCK)								
63-2B2 (BLOCK)			**0**	**0**	**0**	**0**	**0**	**0**

Note tolerance on density monitor ± 2 psi

Water Moisture Content

Temperature: **68** °F 20.0 °C

A PHASE CONTENT	B PHASE CONTENT	C PHASE CONTENT
PPM	PPM	PPM

Power Circuit Breaker Guidelines

Record Nameplate Data

Verify Prints

Physical Orientation

Wiring & Jumpers

Measure Coils & Megger

Test CTs

Gas Fill & Measure

Wiring Checks

Check Timing

Primary Contact Resistance

Energy Storage

Power Factor

Operational Checks / Load Overall

Accessory and Alarm Checks

Final Moisture

Final Checks

Final Checks

Trip Checks - Local & Remote

Alarms & Indications - Local & Remote - SCADA

CT Final Checks

Bridge & Dummy Load PT Circuits

Gas Pressures

Ground Switches Open / All Relays in Service

Hi-Pot w/ System Voltage

Close PCB & Pick-up Load

QuickTime™ and a
H.264 decompressor
are needed to see this picture.

PCB Final Checks

Trip Checks - Local and Remote

Alarms - Local & Remote - SCADA

CT Final Checks

Bridge & Dummy Load PT Circuits

Gas Pressures

Ground Switches Open / All Relays in Service

Hi-Pot w/ System Voltage

Close PCB & Pick-up Load

In Service Checks

Power Transformers

Transformer Testing Guidelines

Record Nameplate Data

Auxiliary Components

Physical Orientation

Wiring & Jumpers

Hand Meggering

Test CTs

Oil Processing / Sample

Insulation Power Factor

Insulation Power Factor

Insulation Power Factor

Capacitive Current

Capacitance represents ability to store energy when voltage is applied

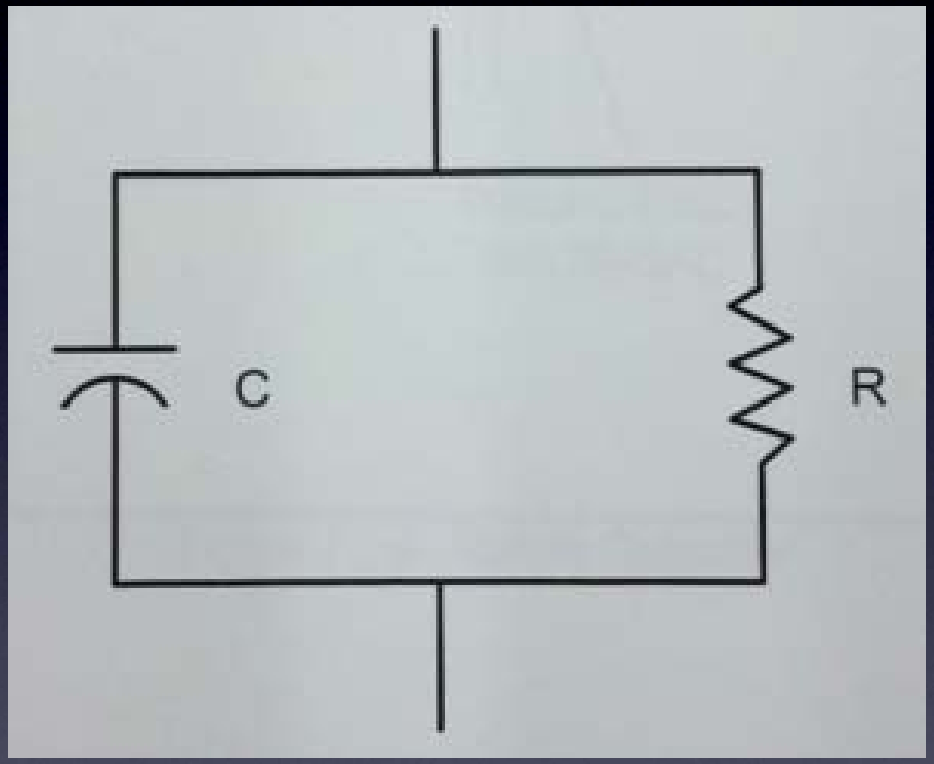

Leakage Current

Dissipated energy and heating from applied voltage across insulation

Measuring Dielectric Loss

Insulation Power Factor

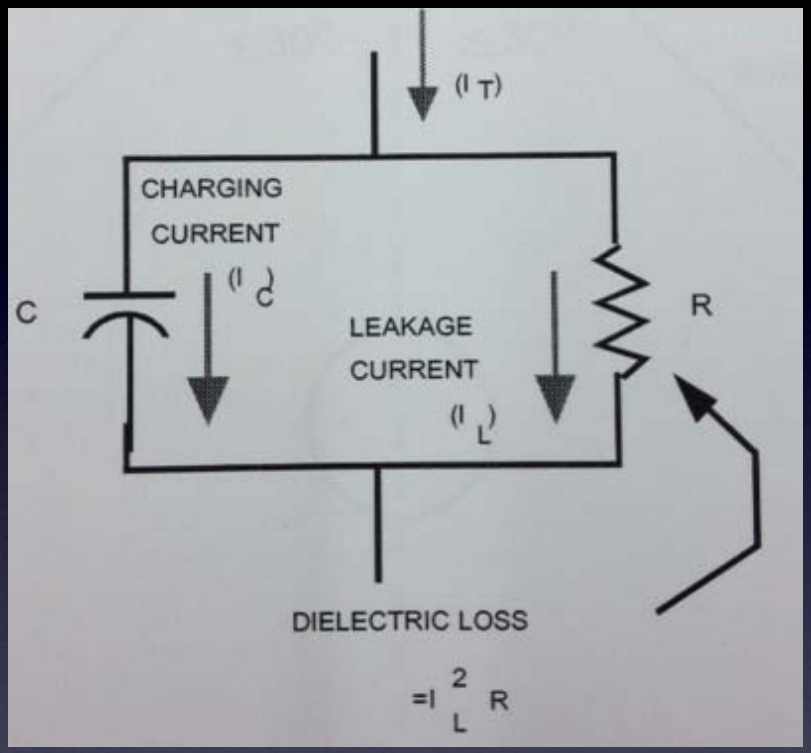

% Power Factor in general: Ratio of Watts to Total Power

Here it is Ratio of Dielectric Losses to Total Power supplied, or ratio of leakage current to total current.

Example: Total Power = 460 mVA with 3.3 mW : Calculated % PF = 0.72

Insulation Power Factor

- Grounded Specimen Test (Ground)

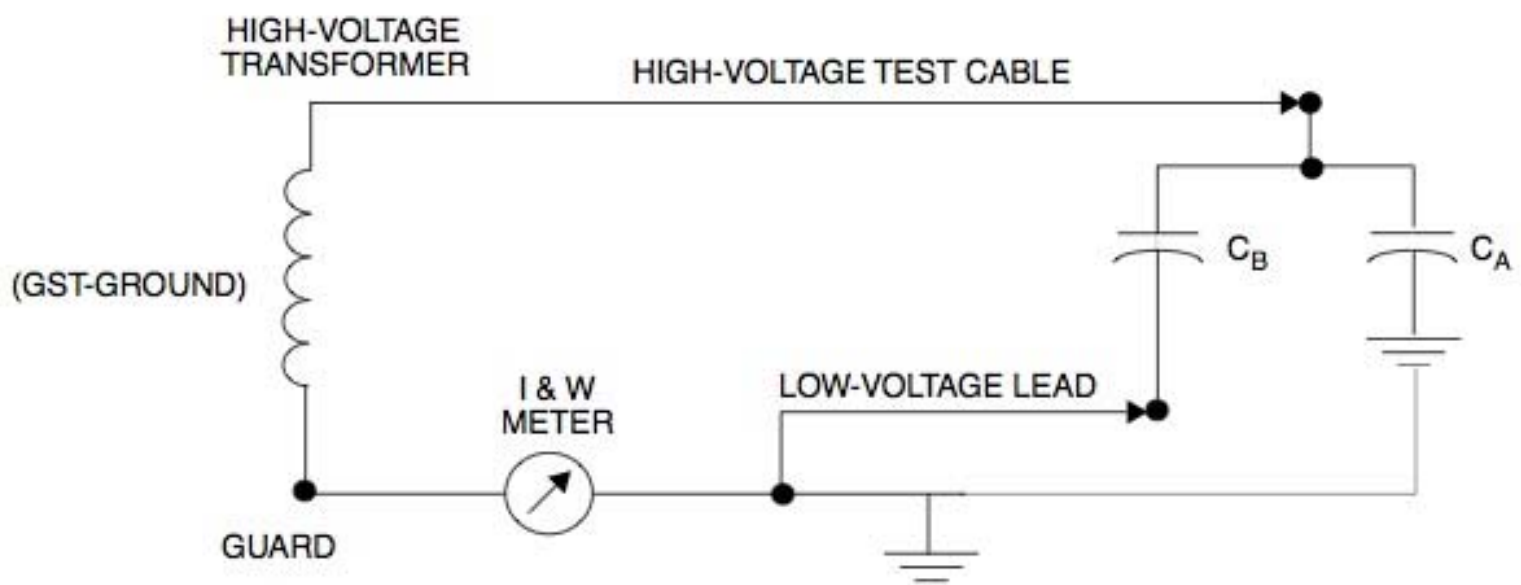

b) Low-voltage switch in ground—
Measure C_A and C_B (grounded-specimen test mode GST)

Insulation Power Factor

- Grounded Specimen Test w/ LV guarded out (Guard)

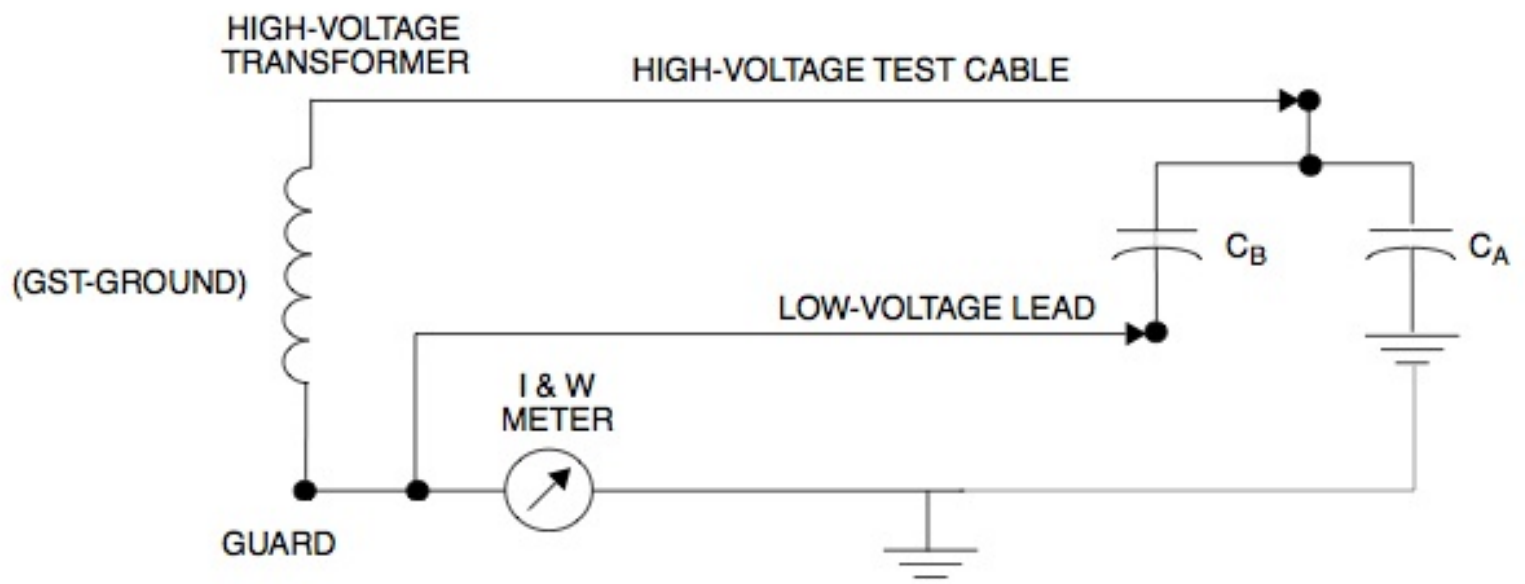

c) Low-voltage switch in guard—
Measure C_A only (grounded-specimen test mode GST)

Insulation Power Factor

- Un-grounded Specimen Test (UST)

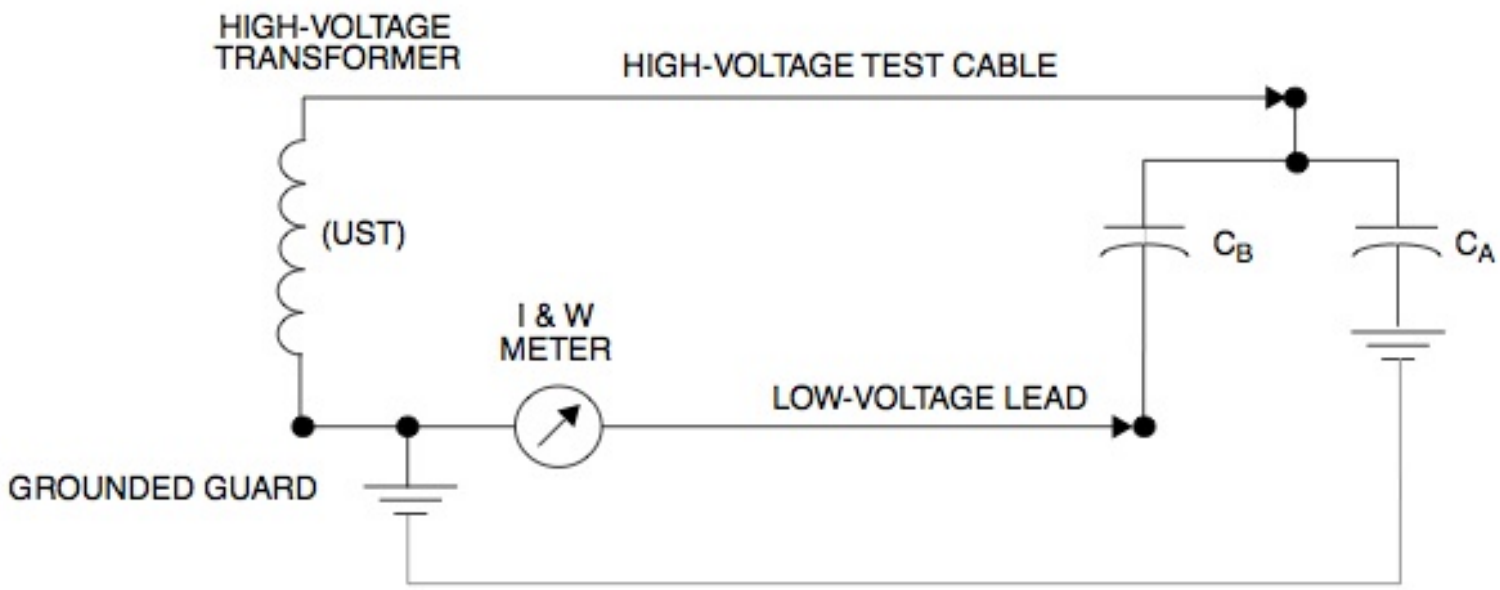

a) Low-voltage switch in UST—
Measure C_B only (ungrounded-specimen test mode UST)

Insulation Power Factor

- Ground, Guard, & UST

THREE WINDING TRANSFORMER

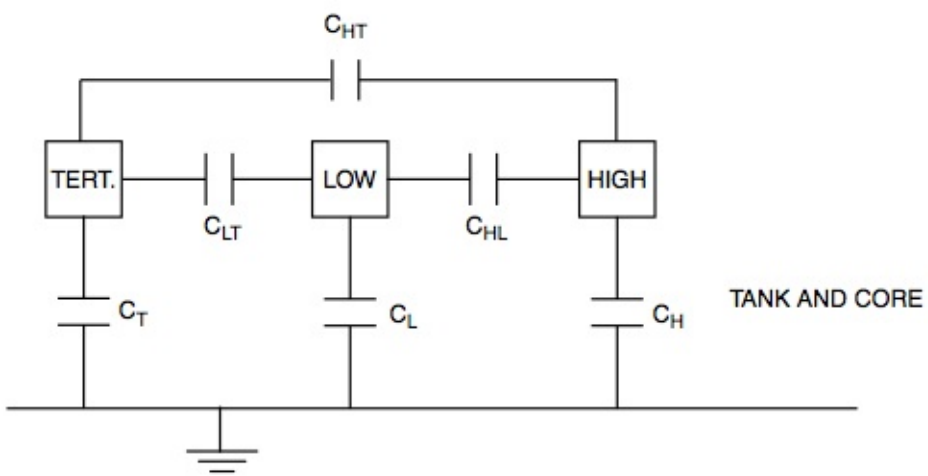

Test Mode	Energize	Ground	Guard	UST	Measure
GST	High	—	Low, Tert.	—	C_H
GST	Low	—	Tert., High	—	C_L
GST	Tert.	—	High, Low	—	C_T
Supplementary Test for Interwinding Insulations					
UST	High	Tert.	—	Low	C_{HL}
UST	Low	High	—	Tert.	C_{LT}
UST	Tert.	Low	—	High	C_{HT}

Ground

POWER FACTOR TEST CONNECTIONS
2 WINDING 3φ TRANSFORMERS

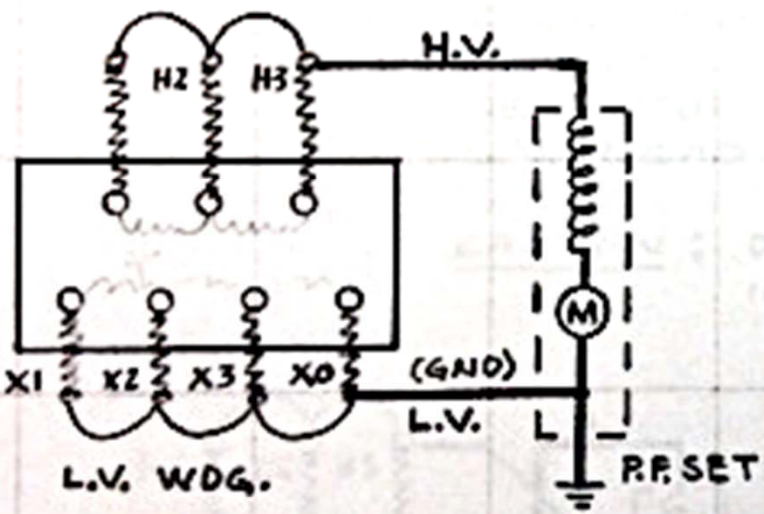

TEST CONNECTIONS:
SHORT CIRCUIT HIGH VOLTAGE & LOW VOLTAGE BUSHINGS. CONNECT P.F. SET H.V. LEAD TO H.V. WDG & P.F. SET L.V. LEAD TO L.V. WDG.

TEST #1 — MEASURES H.V. WDG & BUSHINGS TO CORE & GND & MEASURES H.V. WDG TO L.V. WDG.
SET L.V. SWITCH TO "IN" OR "GROUND" POSITION.

Guard

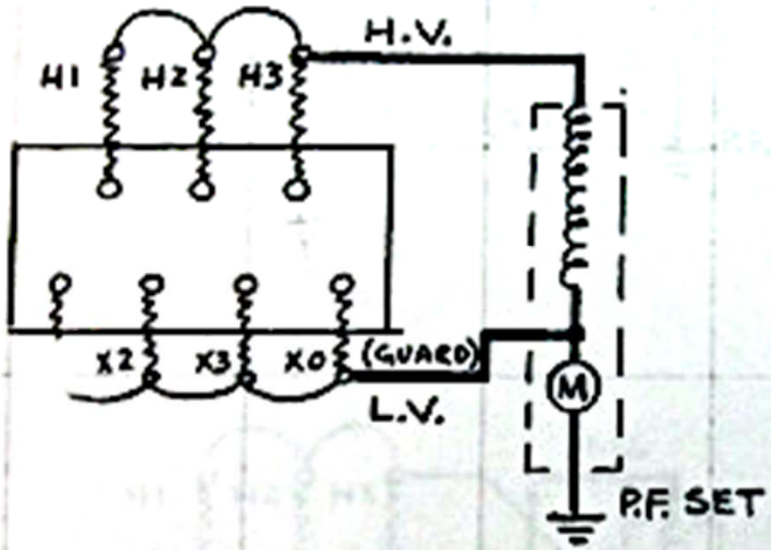

TEST #2 - MEASURES H.V. WDG'S & BUSHINGS TO CORE & GND.

SET L.V. SWITCH TO "MIDPOINT" OR "GUARD" POSITION.

UST

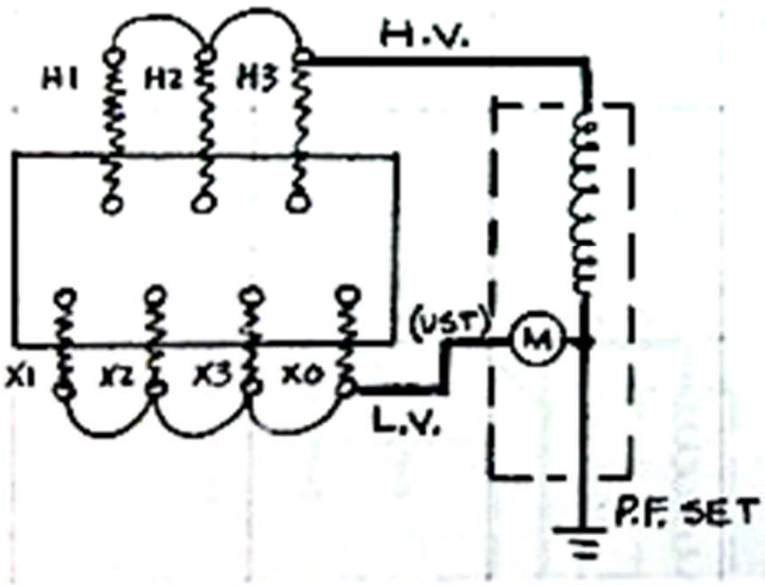

CHECK TEST - MEASURES H.V. WDG'S TO L.V. WDG'S. RESULTS OF THIS TEST SHOULD EQUAL THE CALCULATED DIFFERENCE BETWEEN TESTS NO. 1 & NO. 2.

SET L.V. SWITCH IN "OUT" OR "UST" POSITION.

Ground

TEST CONNECTIONS: SHORT CIRCUIT HIGH & LOW VOLTAGE BUSHINGS. CONNECT P.F. SET H.V. LEAD TO L.V. BUSHINGS & CONNECT P.F. SET L.V. LEAD TO H.V. BUSHINGS.

CAUTION: DO NOT ENERGIZE L.V. BUSHINGS, IF RATED AT 15KV, OVER 8.5KV

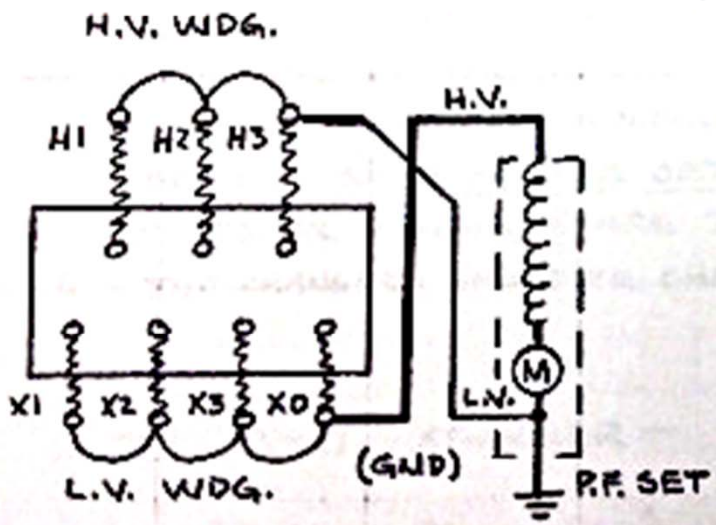

TEST #3 MEASURES L.V. WDG'S & BUSHINGS TO CORE & GND. MEASURES L.V. WDG'S TO H.V. WDG'S.
SET L.V. SWITCH TO "IN" OR GROUND POSITION.

Guard + UST

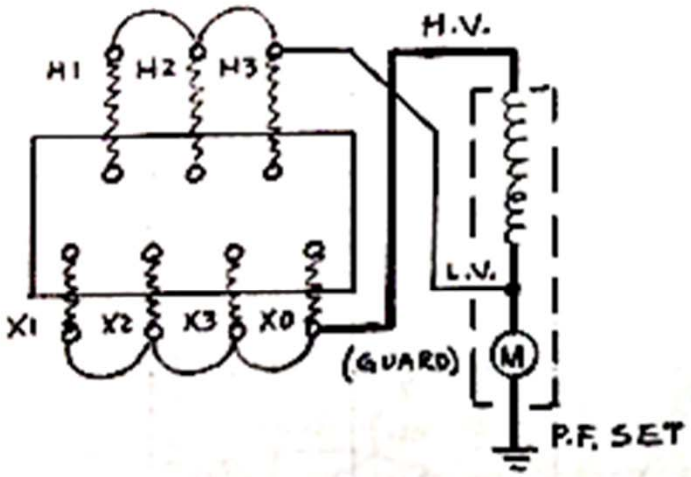

TEST #4 MEASURES L.V. WDG'S & BUSHINGS TO CORE & GND.

SET L.V. SWITCH TO "MIDPOINT OR GUARD POSITION.

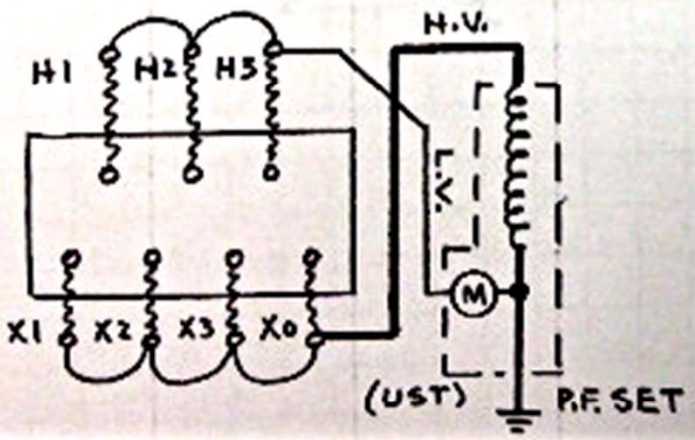

CHECK TEST MEASURES L.V. WDG'S TO H.V. WDG'S. RESULTS OF THIS TEST SHOULD EQUAL THE CALCULATED DIFFERENCE BETWEEN TESTS NO. 3 & NO. 4.

SET L.V. SWITCH IN "OUT" OR "UST" POSITION.

Excitation Current

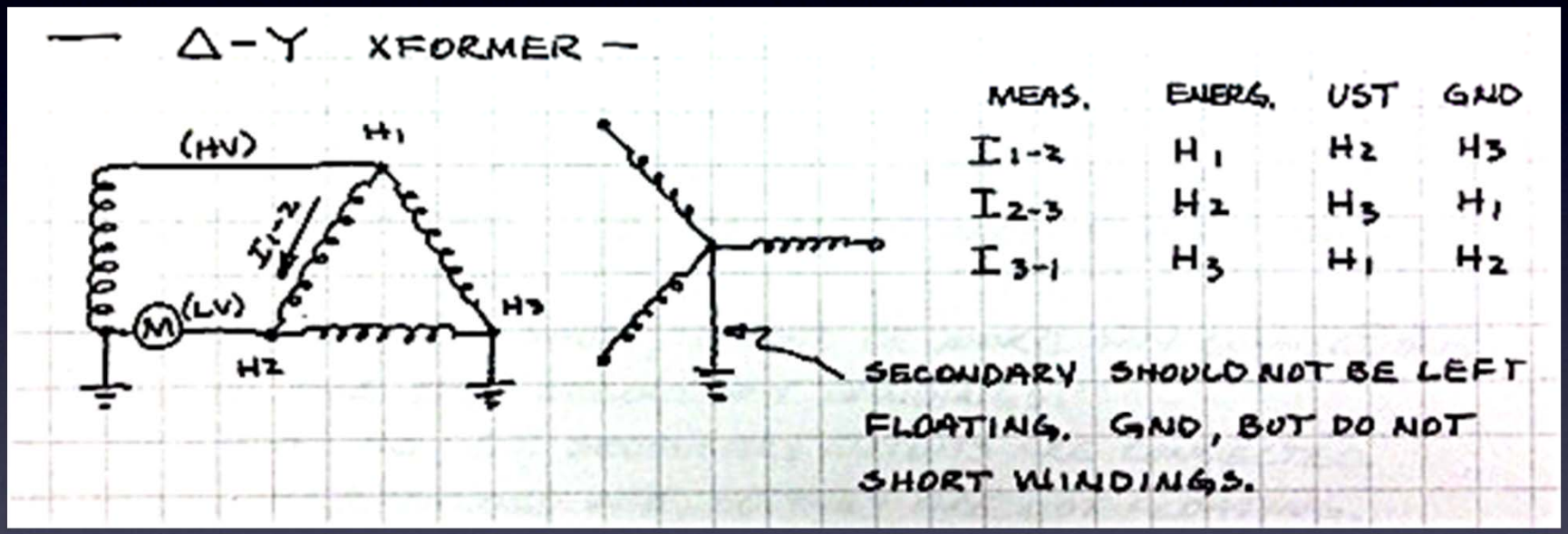

Excitation Current

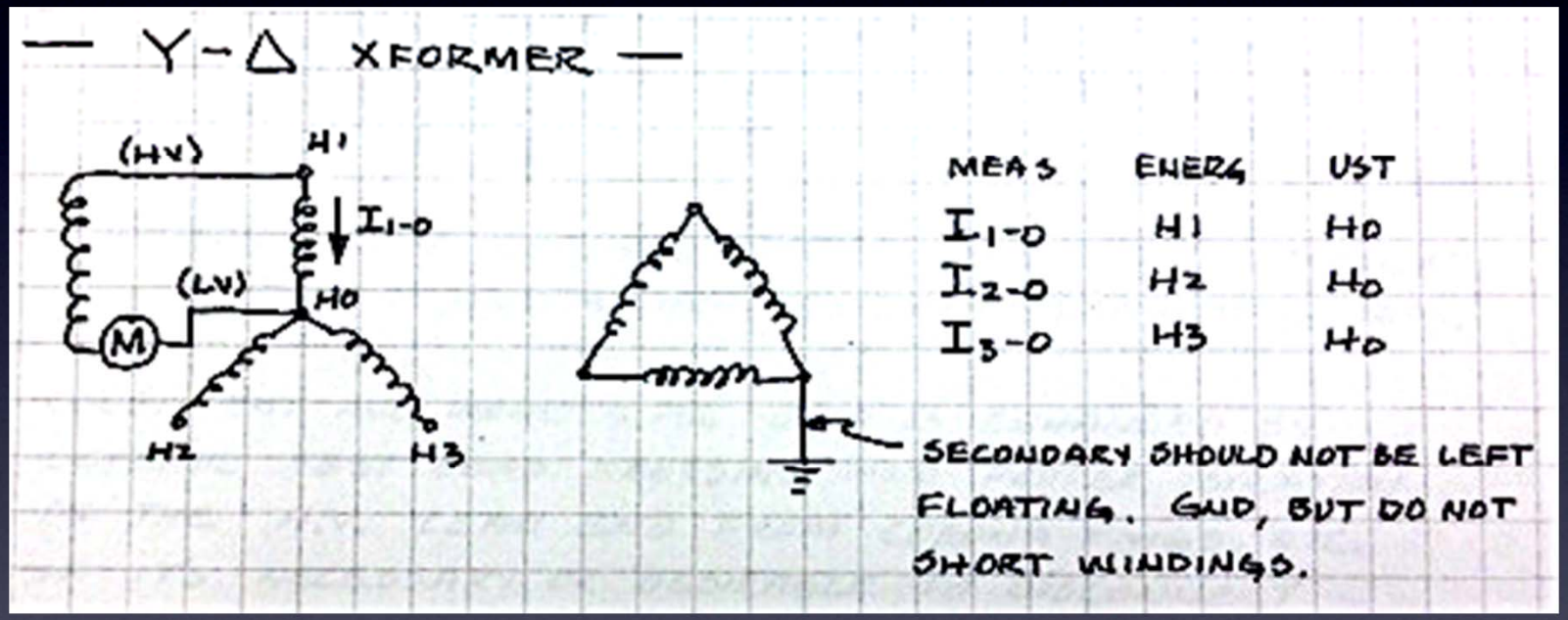

Bushings

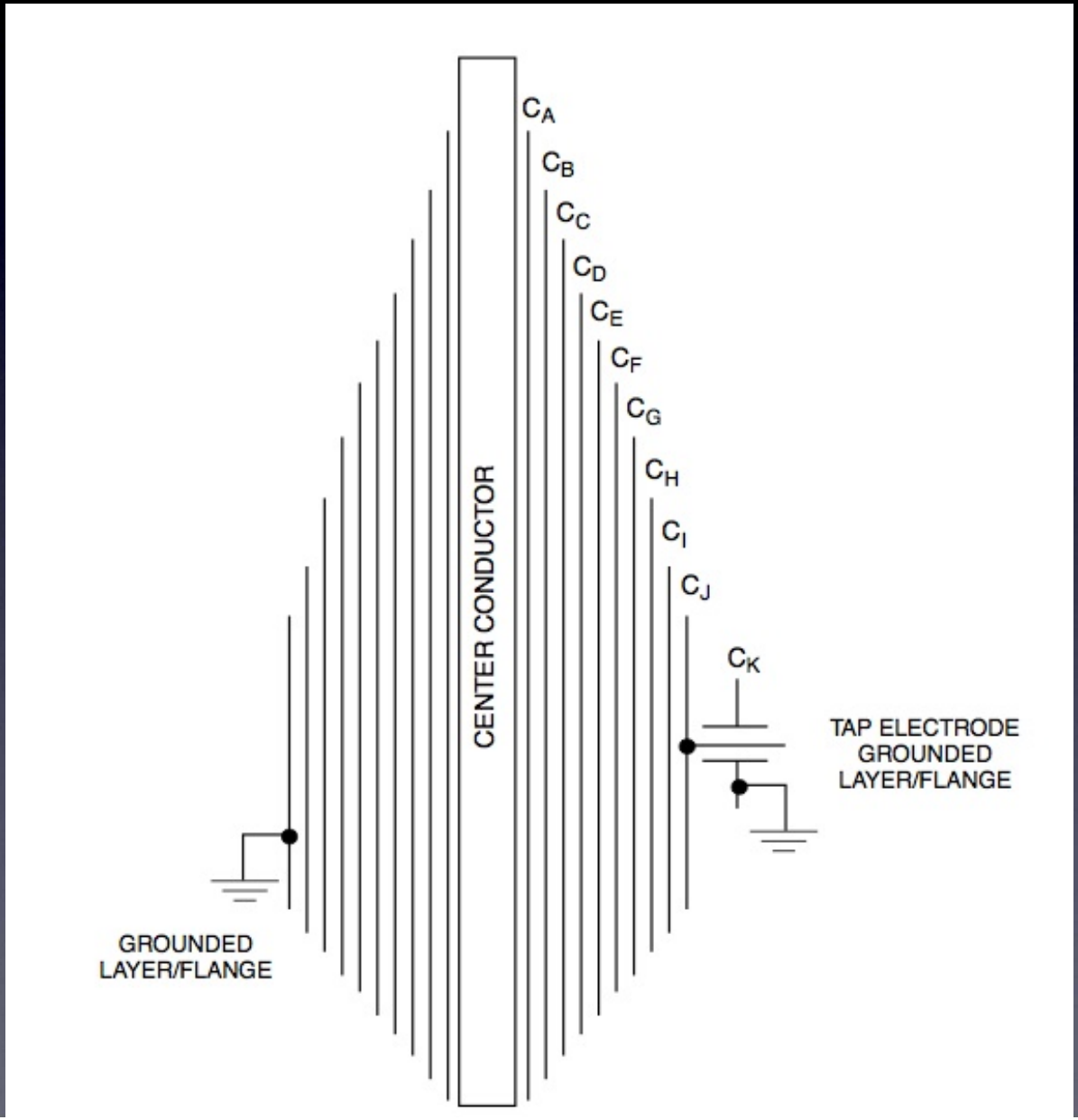
CENTER CONDUCTOR
C_A
C_B
C_C
C_D
C_E
C_F
C_G
C_H
C_I
C_J
C_K
TAP ELECTRODE
GROUNDED
LAYER/FLANGE
GROUNDED
LAYER/FLANGE

Bushings

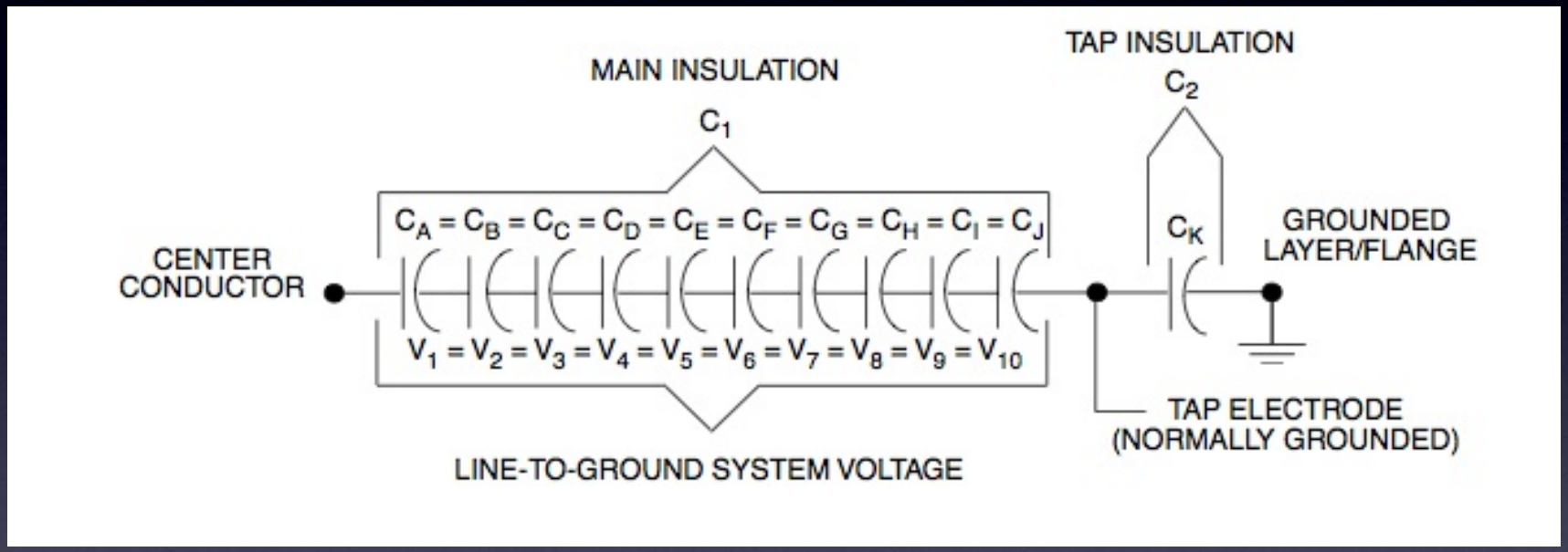

Higher Voltages have potential taps w/ C2 > C1. Check Nameplate before applying voltages. Megger Bushing and its tap if no PF test set is available.

Transformer Testing Guidelines

Record Nameplate Data

Auxiliary Components

Physical Orientation

Wiring & Jumpers

Hand Meggering

Test CTs

Oil Processing/ Sample

Insulation Power Factor

Winding Ratio, Polarity

Winding Ratio, Polarity

Purpose: Checks Turns Ratio & Polarity on all tap connections

Method: TTR Test Set continually through all taps.

Analysis:

Measured Ratio and Nameplate should match very closely (0.2%)

Measured Ratio will be slightly lower than calculated due to slight losses in TTR test set.

Shorted turns & high contact resistance indicated by high excitation current. Ratio error greater than 0.2% will be easily noted.

Transformer Testing Guidelines

Record Nameplate Data

Auxiliary Components

Physical Orientation

Wiring & Jumpers

Hand Meggering

Test CTs

Oil Processing/ Sample

Insulation Power Factor

Winding Ratio, Polarity

Impedance

Measuring Impedance

Purpose: Detect shipping damage & basis for future tests

Method: Compare with Nameplate at Nominal Taps

Analysis: Useful for determining core and coil shifting, loose or high resistance connections

Measuring Impedance

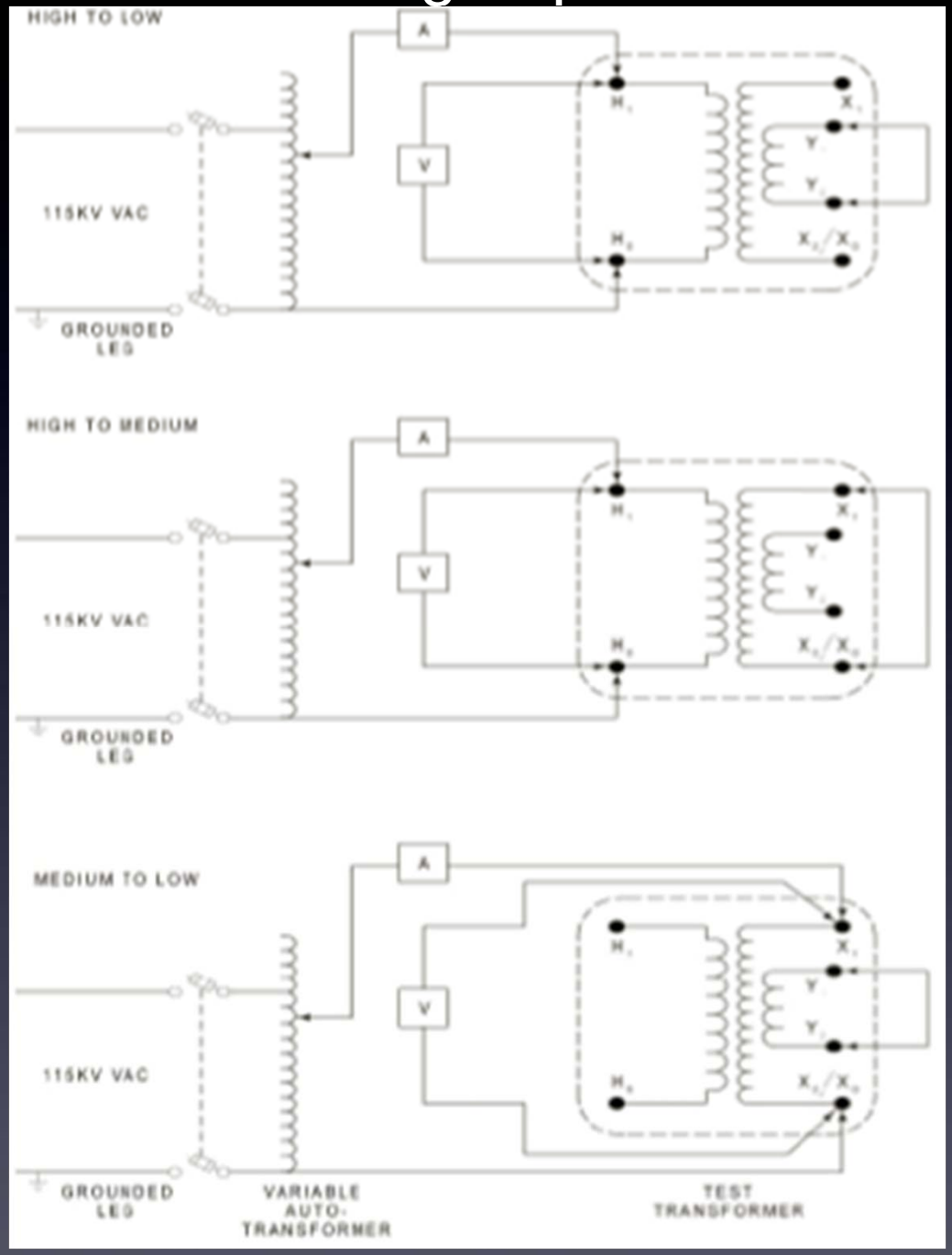

Measuring Impedance

In General:

$$\%Z = Z_{MEASURED} \bullet \frac{I_{RATED}}{V_{RATED}} \bullet 100$$

3 Phase wye-wye or wye-delta

$$\%Z = \frac{1}{10} \bullet \frac{V_{MEASURED}}{I_{MEASURED}} \bullet \frac{KVA_{3\phi RATED}}{(KV_{L-L})^2}$$

3 Phase delta-delta

$$\%Z = \frac{1}{20} \bullet \frac{V_{MEASURED}}{I_{MEASURED}} \bullet \frac{KVA_{3\phi RATED}}{(KV_{L-L})^2}$$

Zero-sequence

$$\%Z = \frac{1}{10} \bullet \frac{V_{MEASURED}}{I_{MEASURED}} \bullet \frac{3(KVA_{3\phi RATED})}{(KV_{L-L})^2}$$

Transformer Testing Guidelines

Record Nameplate Data

Auxiliary Components

Physical Orientation

Wiring & Jumpers

Hand Meggering

Test CTs

Oil Processing/ Sample

Insulation Power Factor

Winding Ratio, Polarity

Impedance

Calibrate Temperature

TYPE OF TRANSFORMER	AVERAGE	HOT SPOT TEMP		TOP OIL TEMP		COOLING ON @ HOT SPOT TEMP		RECOMMENDED % OF MAX NAMEPLATE KVA WITH COOLING				
		ALARM	MAX	ALARM	MAX							
COOLING	TEMP RISE	SETTING	OPERATING	SETTING	OPERATING	1st Stage	2nd Stage	All	2/3	1/2	1/3	none
OA REACTORS	55°C 65°C 65°C	95°C 105°C 110°C	100°C 110°C 110°C	80°C 90°C 95°C	85°C 95°C 95°C	-	-	-	-	-	-	-
OA/FA	55°C 65°C	95°C 105°C	100°C 110°C	80°C 90°C	85°C 95°C	80°C	-	FA 100%	-	-	-	OA 80%
OA/FA/FA	55°C 65°C	95°C 105°C	100°C 110°C	80°C 90°C	85°C 95°C	80°C	90°C	FA 100%	-	FA 80%	-	OA 60%
OA/FA/FOA	55°C 65°C	95°C 105°C	100°C 110°C	80°C 90°C	85°C 95°C	80°C	90°C	FOA 100%	-	FA 80%	-	OA 60%
OA/FOA/FOA	55°C 65°C	95°C 105°C	100°C 110°C	80°C 90°C	85°C 95°C	80°C	90°C	FOA 100%	-	FOA 80%	-	OA 60%
FOA/FOA	55°C 65°C	95°C 105°C	100°C 110°C	80°C 90°C	85°C 95°C		80°C	FOA 100%	FOA 80%	FOA 70%	FOA 50%	*
FOW	55°C 65°C	85°C 100°C	90°C 105°C	75°C 85°C	80°C 90°C	-	-	100%	80%	70%	50%	*

***FOA & FOW TRANSFORMER BANKS WITH LOSS OF COOLING:**

Above 100 MVA at maximum load .....20 minutes

Above 100 MVA energized with no load .....1 hour

100 MVA or lower at maximum load .....1 hour

100 MVA or lower energized with no load .....6 hours

Transformer Testing Guidelines

Record Nameplate Data

Auxiliary Components

Physical Orientation

Wiring & Jumpers

Hand Meggering

Test CTs

Oil Processing/ Sample

Insulation Power Factor

Winding Ratio, Polarity

Impedance

Calibrate Temperature

Bump Fans & Pumps

Bushing Pot Devices

DC Winding Resistance

Megger Core Ground & Windings

Trip Checks

Capacitors

Testing Capacitors (Impedance)

Start with Nameplate rating on Can: 200 KVAR @ 22800 V

Q (kVar)= V I sin (theta)

I = kVAR / kV

I = 200 / 22.8 = 8.77 A

X_c (per can) = I / jw(C) = V / I

X_c (per can) = 22800 / 8.77 = 2600 Ohms

C = 1 / 377 (X_c)

C = 1 / 377 (2600) = 1.02 microF

Each Can is then rated @ 1.02 microF

Testing Capacitors (Cont'd)

Number of Cells in Test? 22

1.02 * 22 = 22.4 microF Cap. per layer

Build Data Sheet

$C_{(meas)} = I_{(meas)} / V_{(meas)} * 377$

with $V_{(meas)}$ @ 100V, measure I

V_{meas}	I_{meas}	C_{meas}	C_{calc}	d	%d
100.58	0.859	22.6	22.4	0.2	0.89
100.44	0.867	22.8	22.4	0.4	1.79
100.56	0.860	22.6	22.4	0.2	0.89

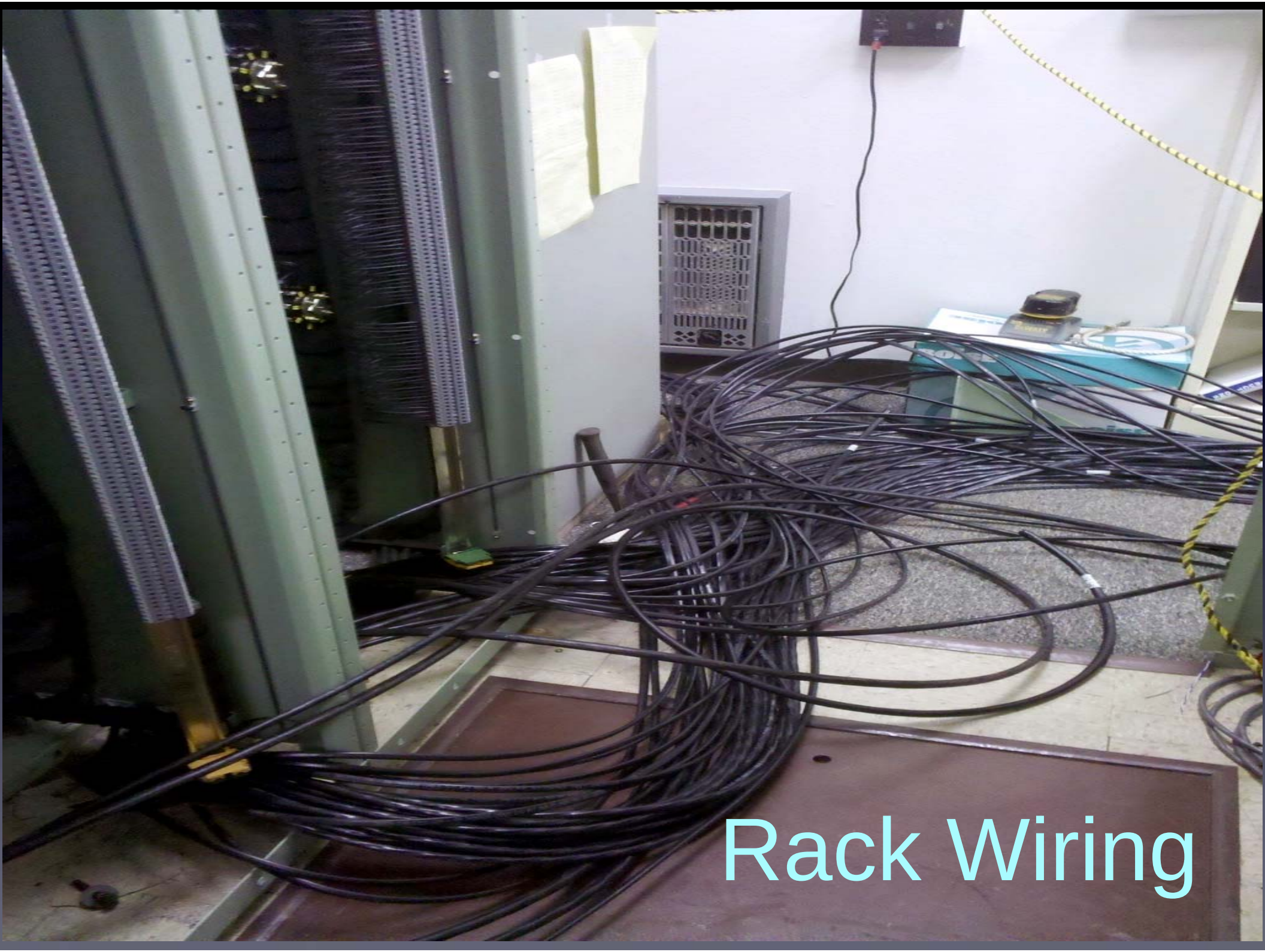
Rack Wiring

Wiring Checks

- Compare Schematics w/ Wiring Prints
- Buzz point to point
- Check Diodes
- Contact Makeups
- Test Switches
- Terminal Blocks
- Jumpers
- Wiggle Check Connections

Relay Testing

In Service Checks

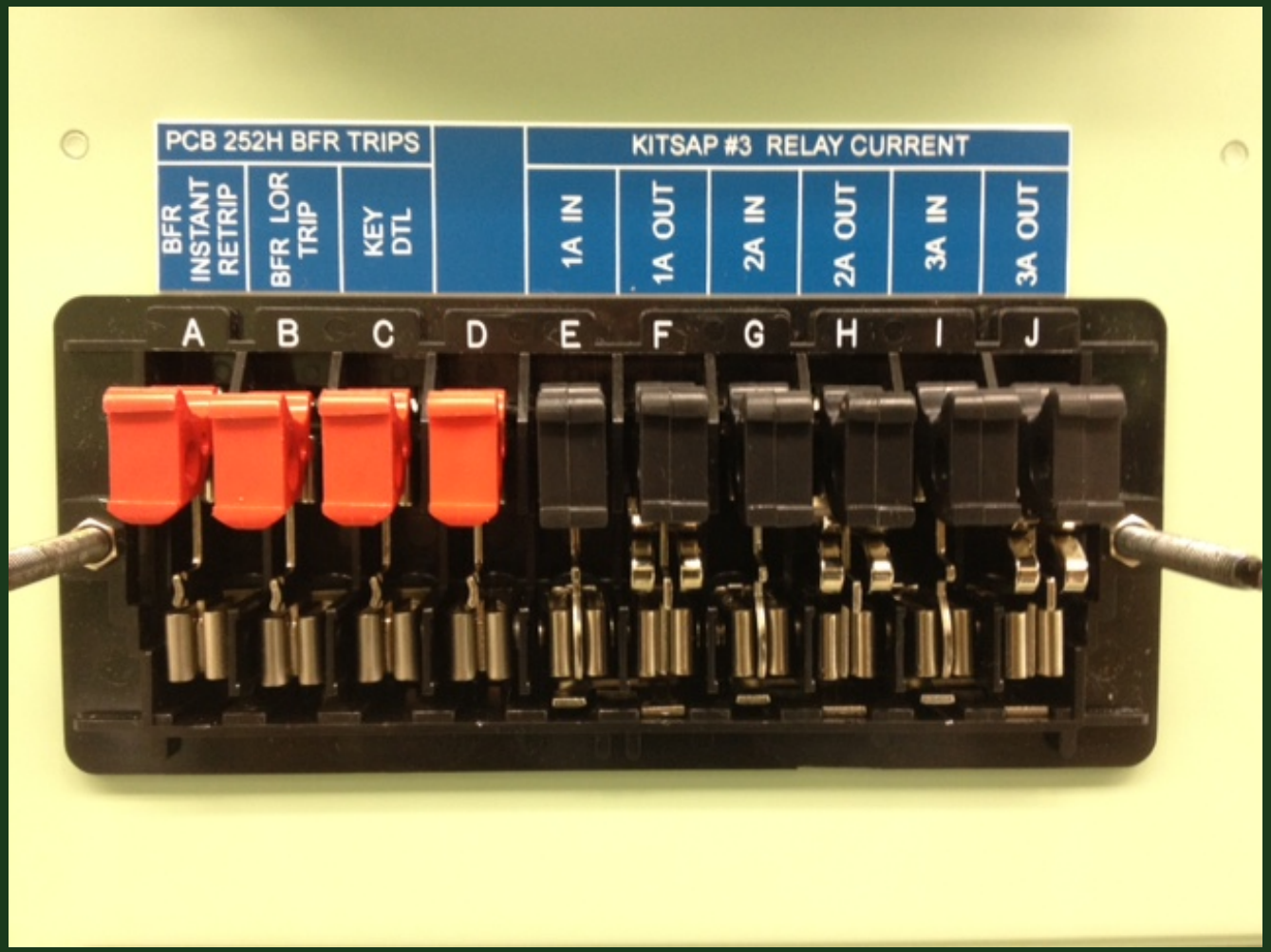

In Service Checks

- Pre-determine the measurements.
- Cutout your TRIPS
- Magnitude and polarity of each current and voltage (phase angle and rotation)
- Look for quantities where you do and don’t expect them to be.
- Open CTs & Shorted CTs
- Wrong Ratios
- Neutral Connections
- Proper Potentials
- Document your Reference Potential &

Thank you
for joining
us.

Stay SAFE...