LUSAS

Integral Bridges and the Modeling of Soil-Structure Interaction

Julian Moses, Principal Engineer, LUSAS

Introduction

Introduction

Introduction

About soil-structure interaction

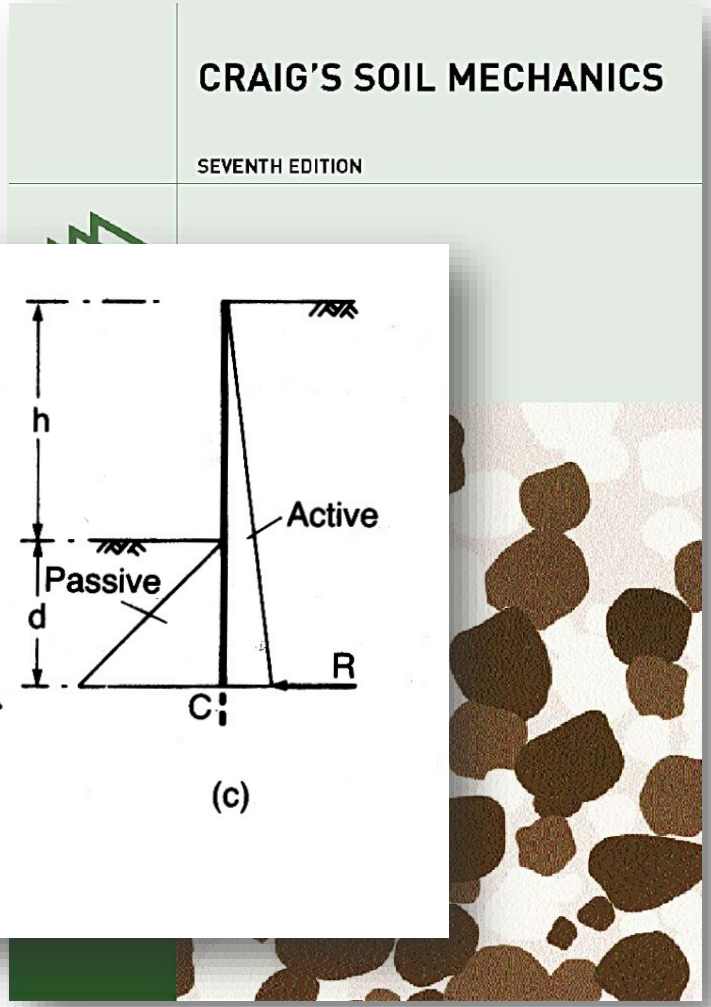

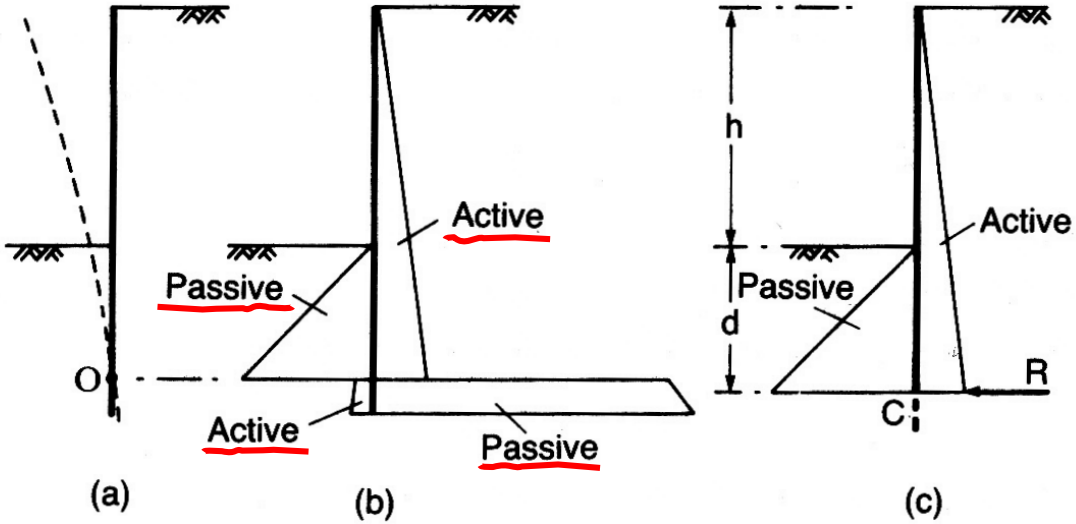

Fig. 6.21 Cantilever sheet pile wall.

About soil-structure interaction

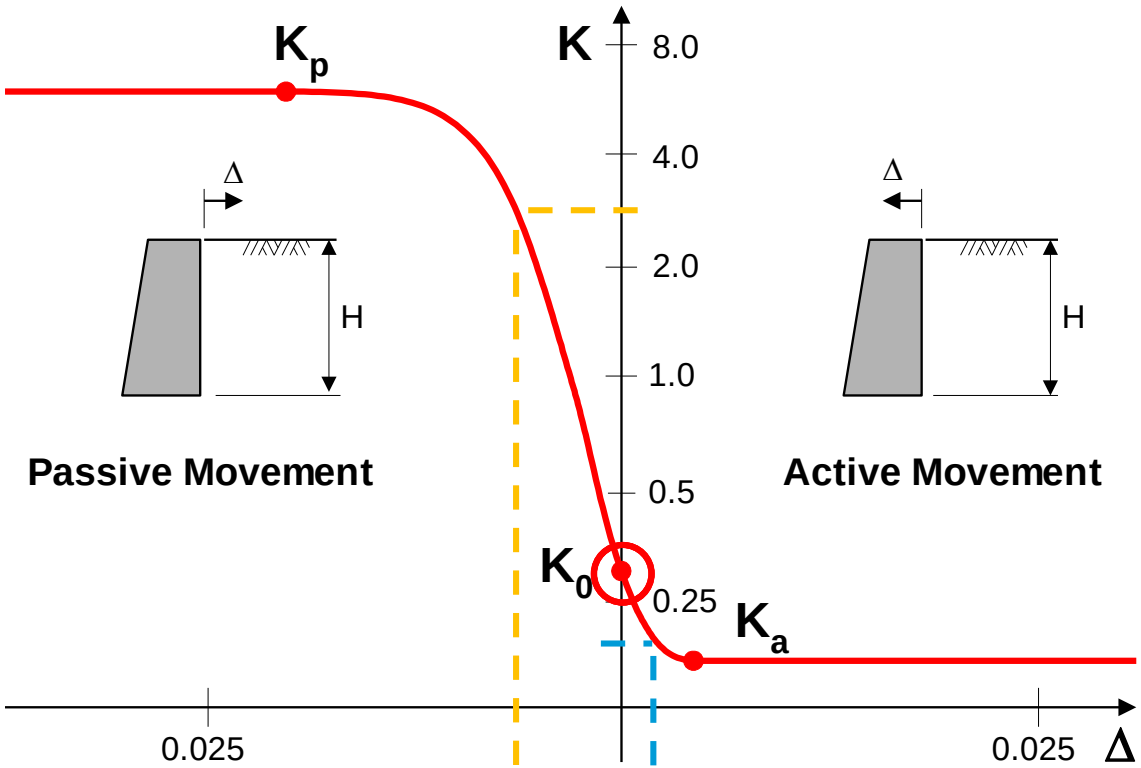

Wall movement Δ / Height H

Seasonal changes

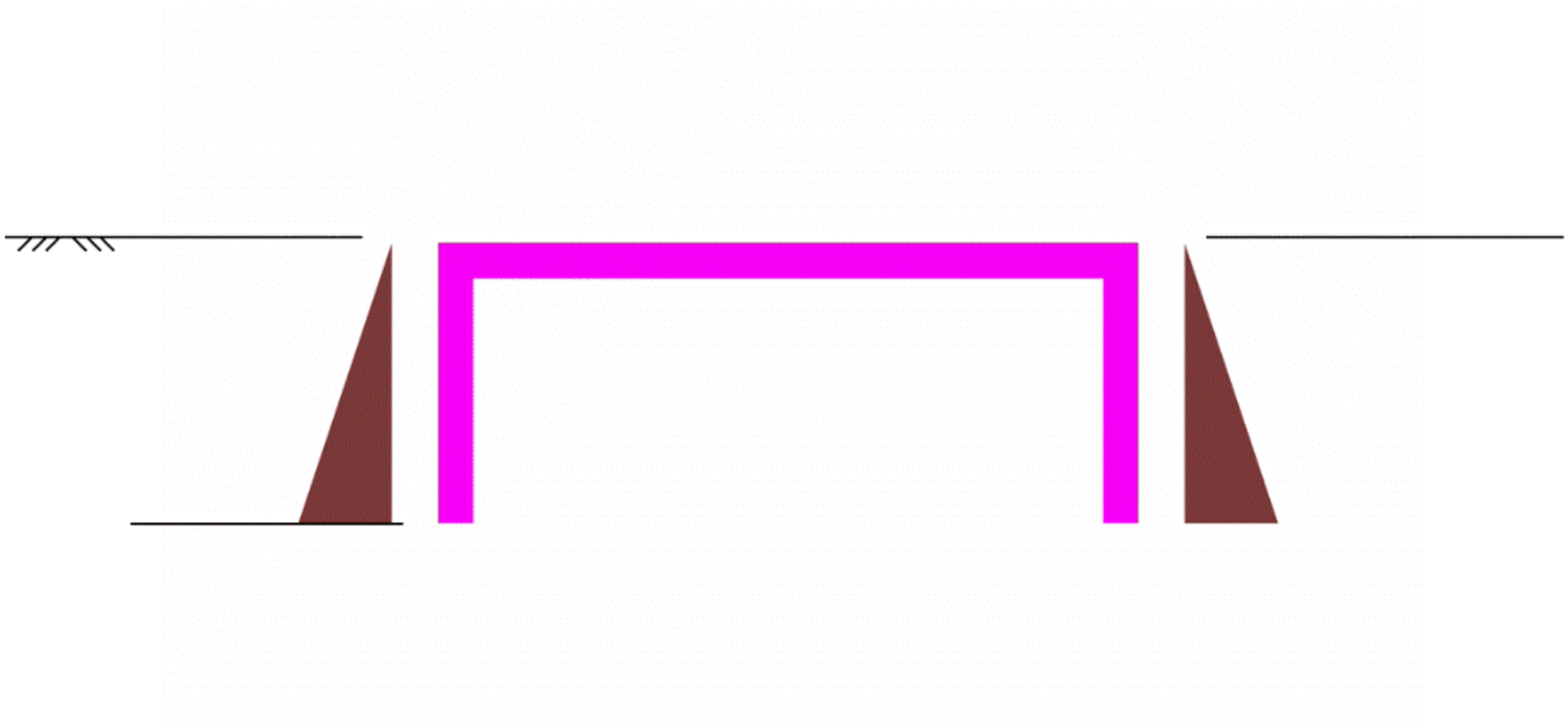

Seasonal changes

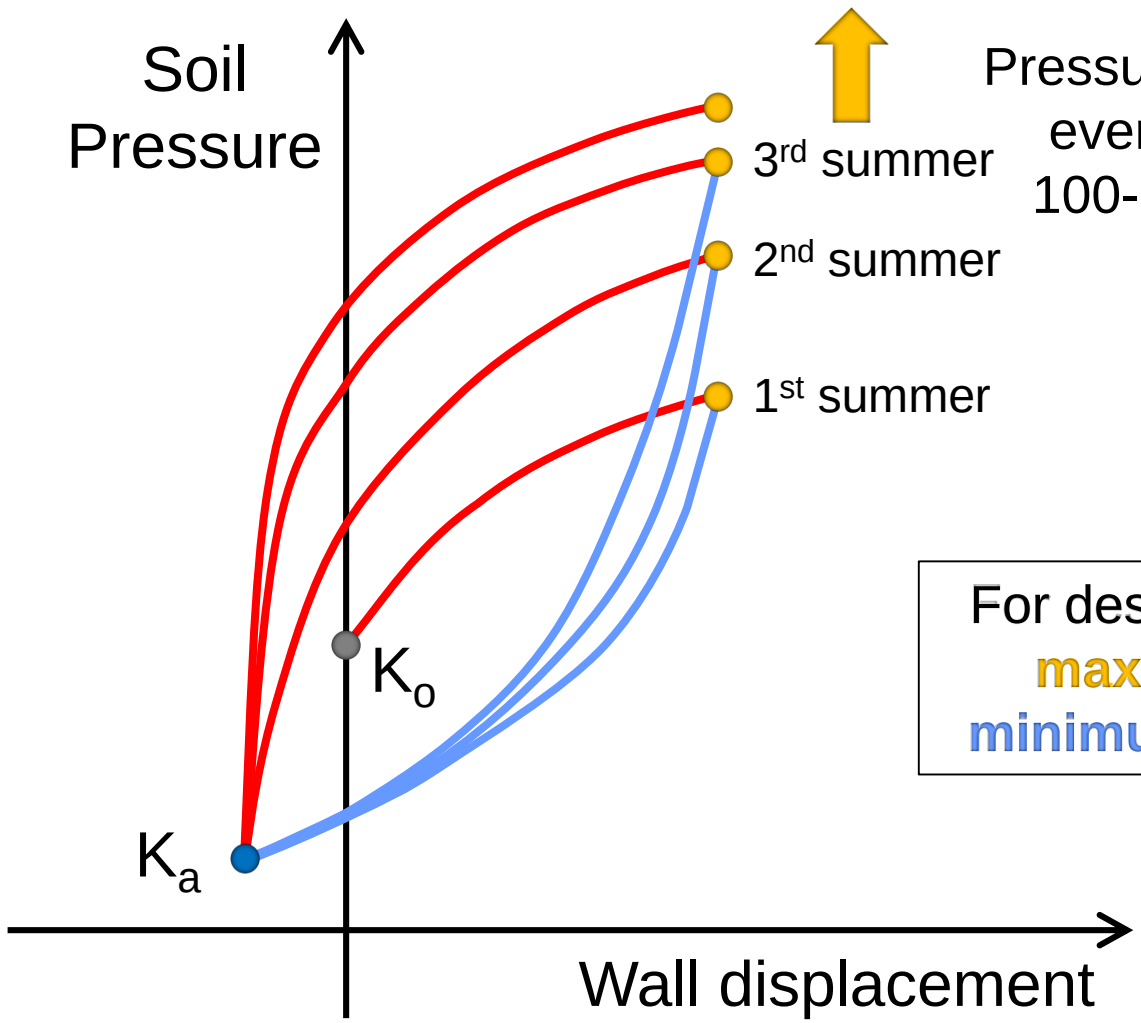

Pressures increase every year for 100-200 cycles

For design, consider **maximum** and **minimum** pressures

Analysis methods

1. Limiting equilibrium approach
2. Soil-structure interaction (continuum)
3. Soil-structure interaction (springs)

1 – Limiting equilibrium

Full height integral abutment on pad footing

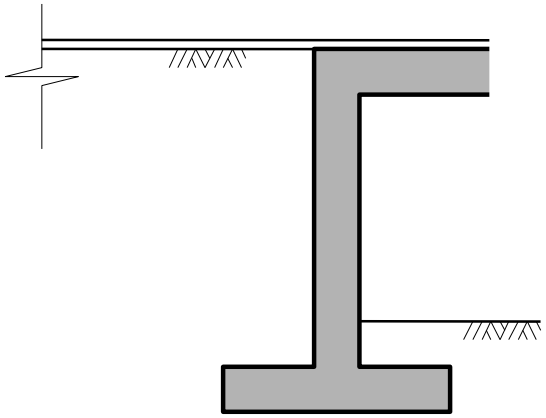

Full height integral abutment on piles

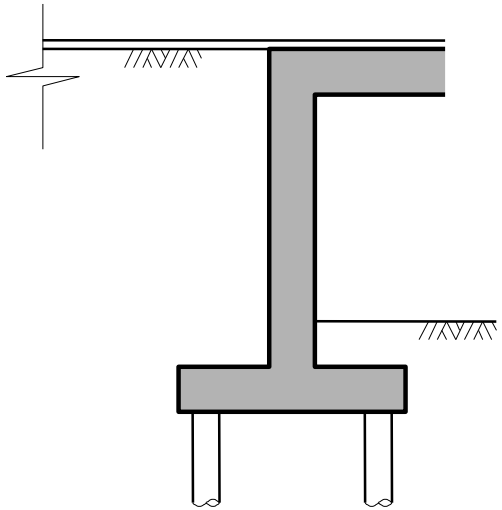

Bank pad

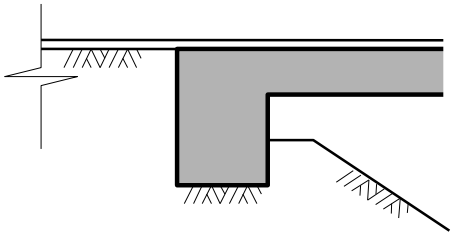

1 – Limiting equilibrium

PD 6694-1:2011

BSI Standards Publica

PUBL

Recor
the d
subje
BS EN

This publica

raising standards worldwide™

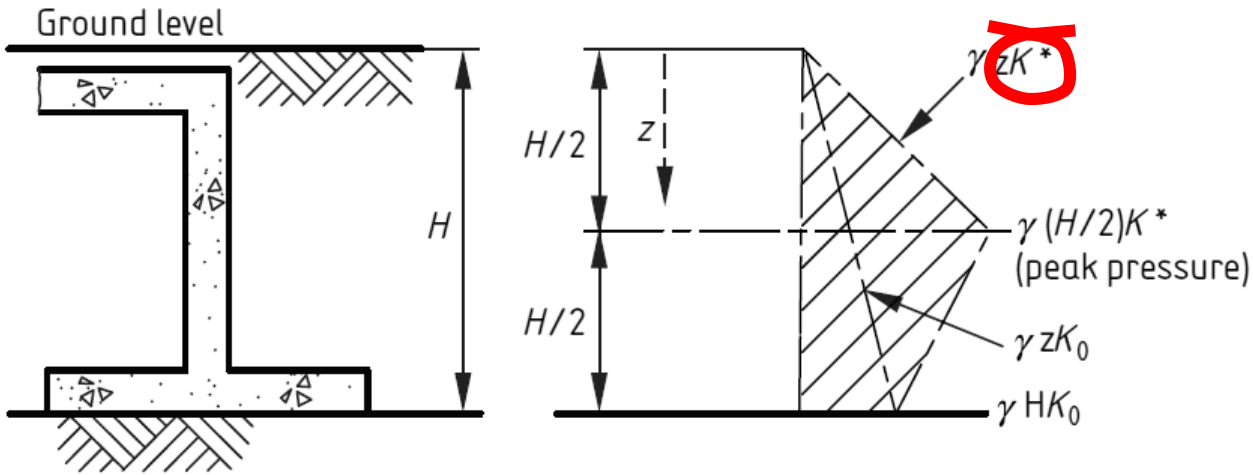

Figure 5 **Earth pressure distributions for abutments which accommodate thermal expansion by rotation and/or flexure**

1 – Limiting equilibrium

Full height integral abutment on pad footing

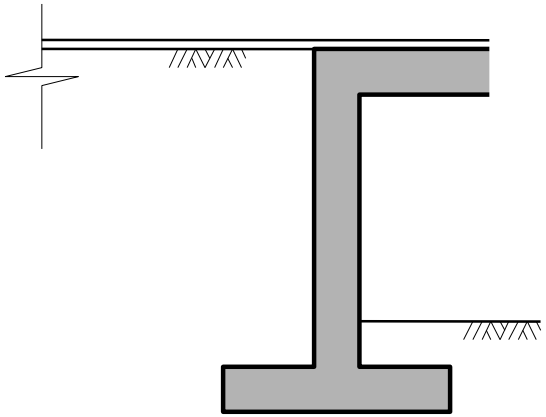

Full height integral abutment on piles

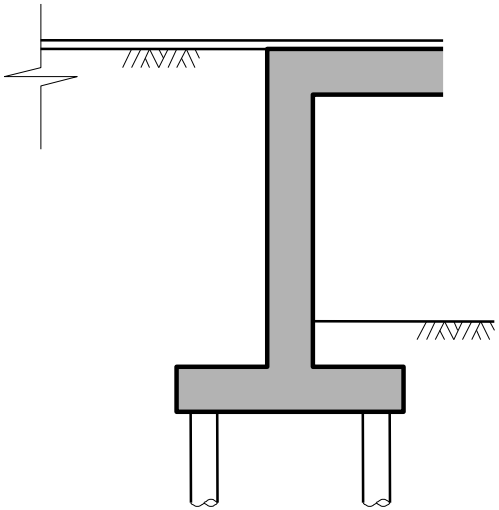

Bank pad

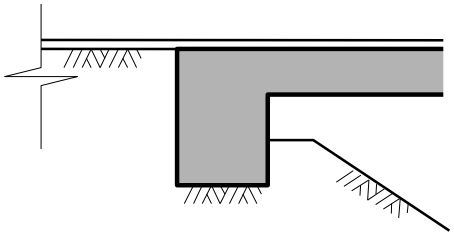

$$K^* = K_o + \left(\frac{40d'_d}{H}\right)^{0.4} K_{p;t}$$

$$K^* = K_o + \left(\frac{Cd'_d}{H}\right)^{0.6} K_{p;t}$$

$$C = 0.51E_s + 14.9 \text{ but } 20 \leq C \leq 66 \quad (E_s \text{ in MPa})$$

1 – Limiting equilibrium

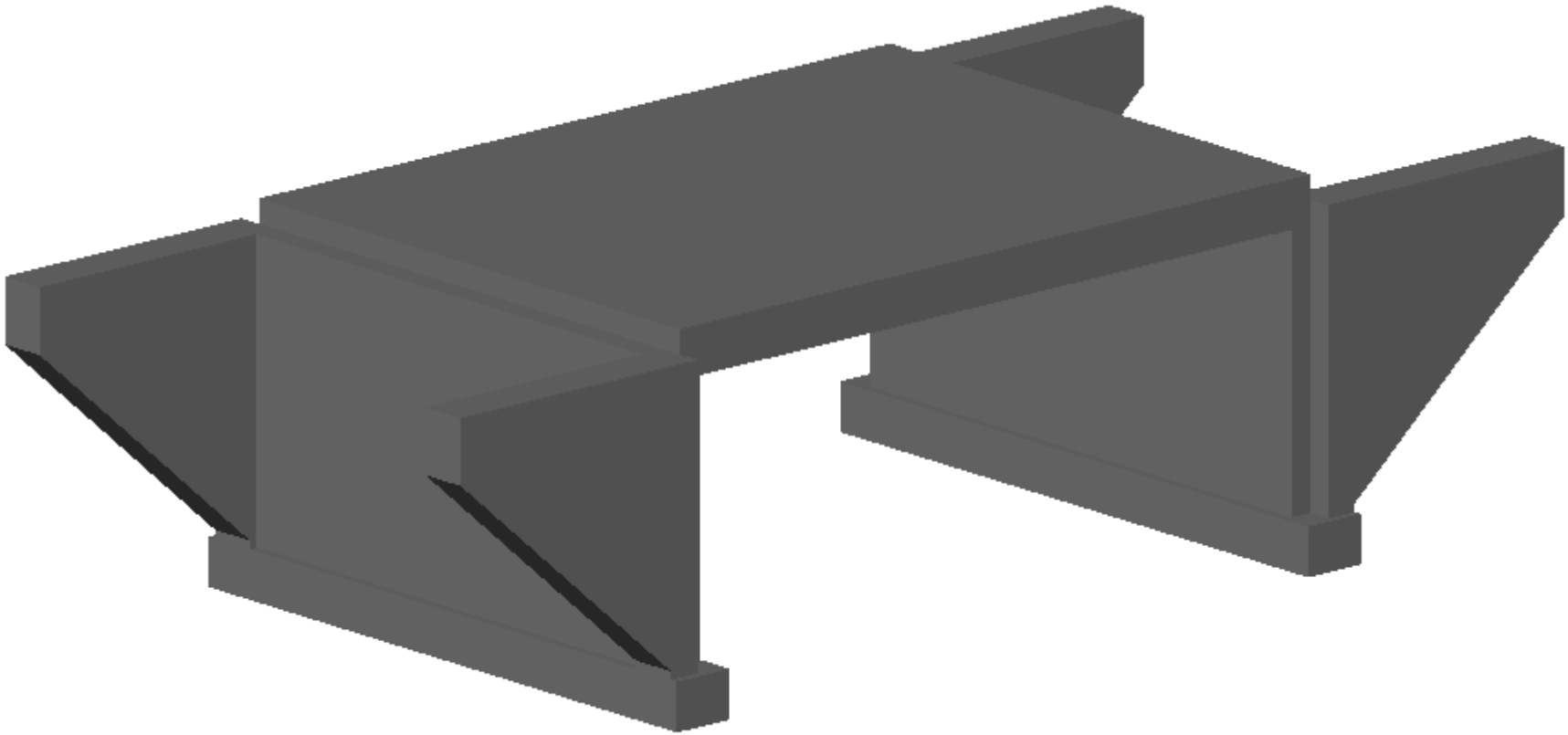

Structural idealisation

- Shell elements
  - Shear, bending, twisting and <u>in-plane forces</u>

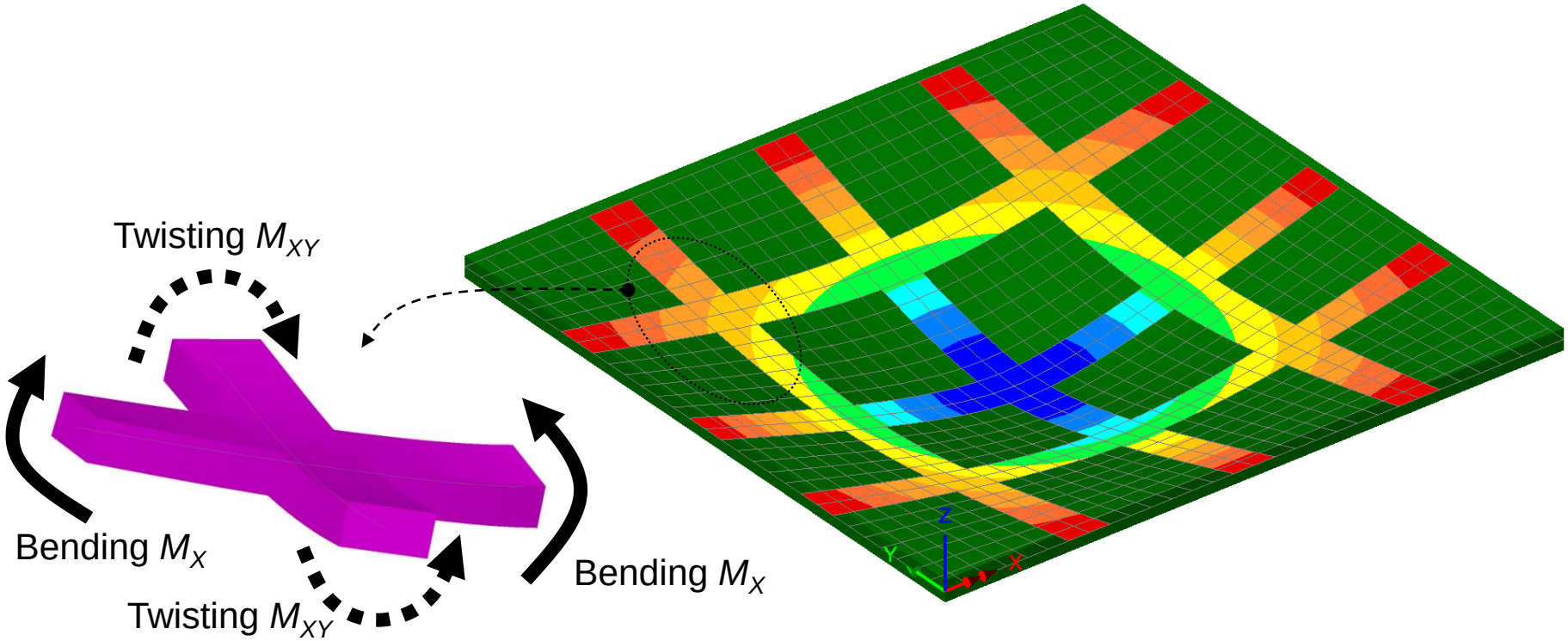

Structural idealisation

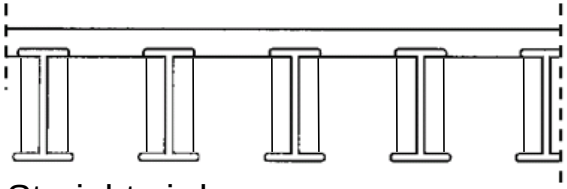

Straight girders,
Precast etc

3D beam elements
(girders)

Shell elements
(slab)

Z

X

Y

Structural idealisation

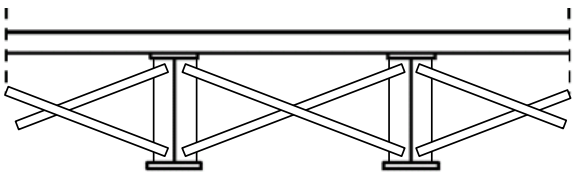

Skew or curved etc

Shell elements (slab)

3D beam elements (bracing)

Shell elements (web)

3D beam elements (flanges & stiffeners)

Structural idealisation

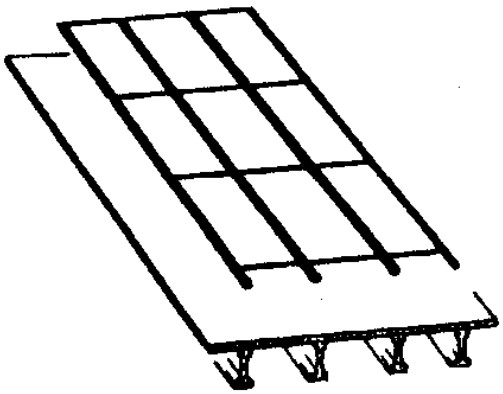

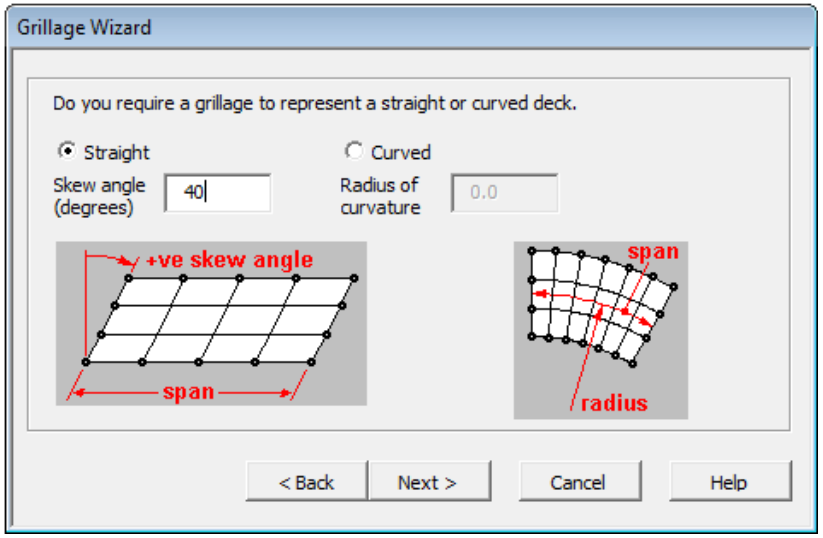

Y

Z X

Grid models

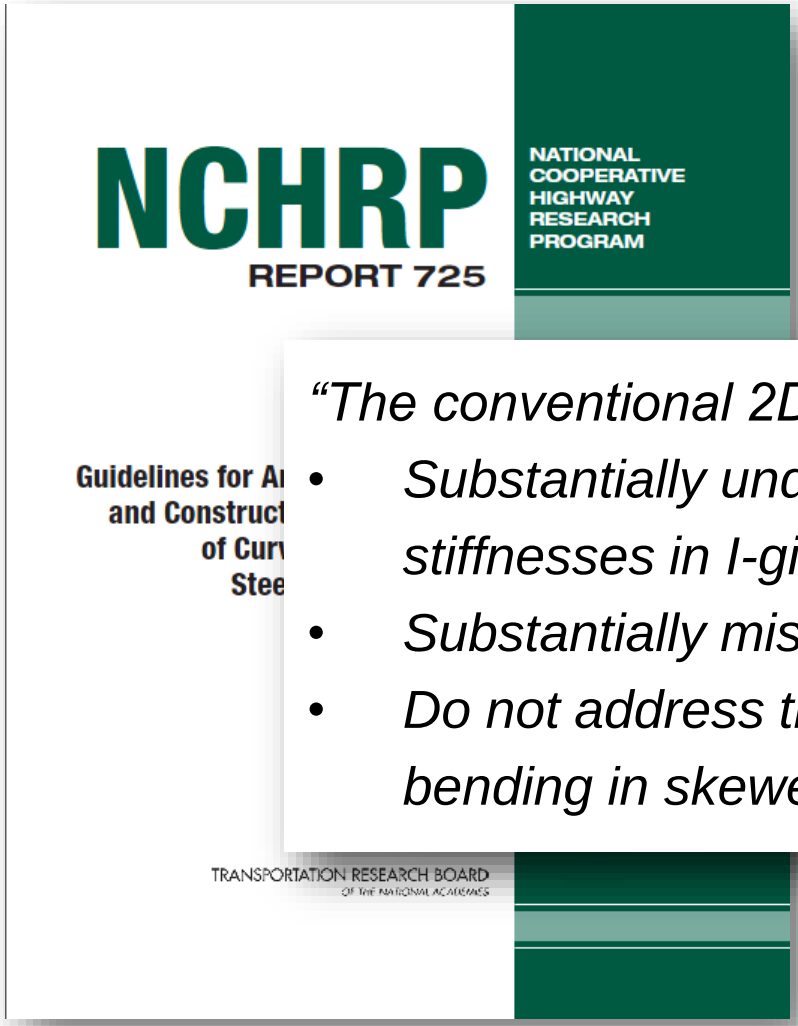

"The conventional 2D-grid models used in current practice

- *Substantially underestimate the girder torsional stiffnesses in I-girder bridges*
- *Substantially misrepresent the cross-frame responses*
- *Do not address the calculation of girder flange lateral bending in skewed I-girder bridges"* Section 2.9

Grid models

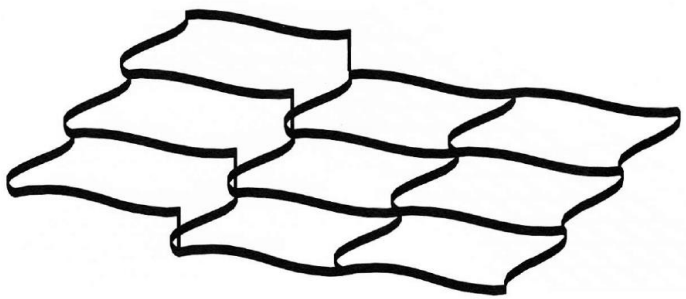

In-plane distortion of members in upstand grillage model

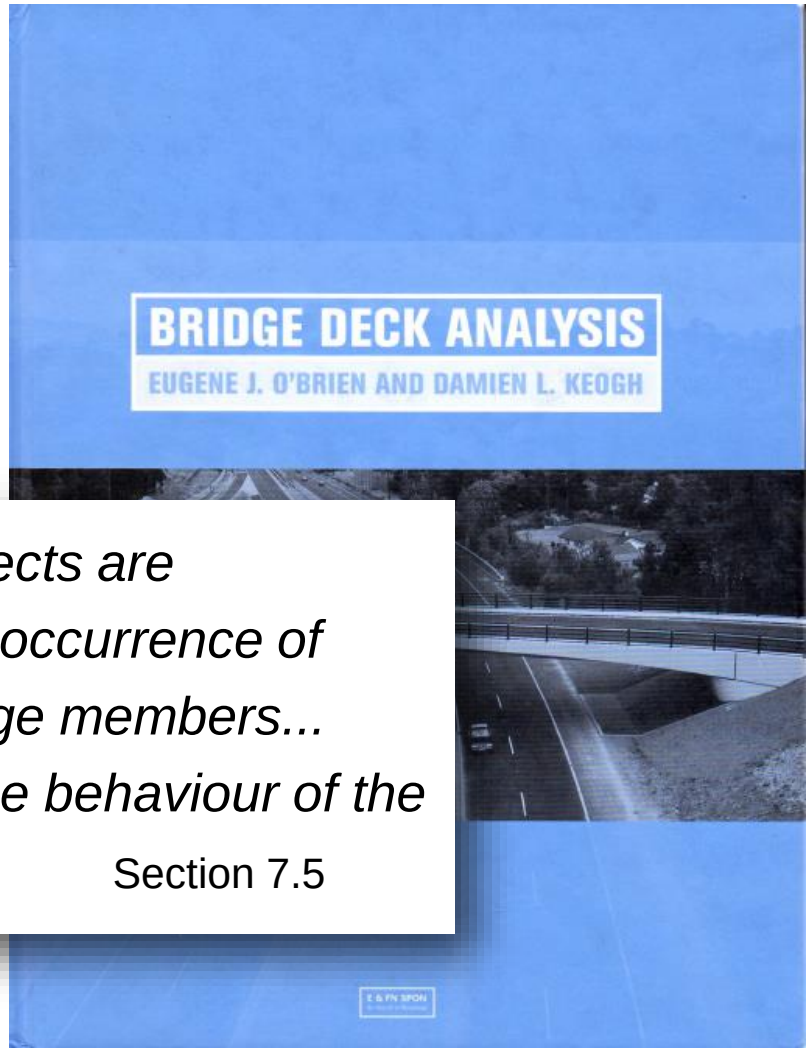

"...difficulties arise when in-plane effects are considered... the real problem is the occurrence of local in-plane distortions of the grillage members... which are clearly inconsistent with the behaviour of the bridge deck."

Section 7.5

1 – Limiting equilibrium

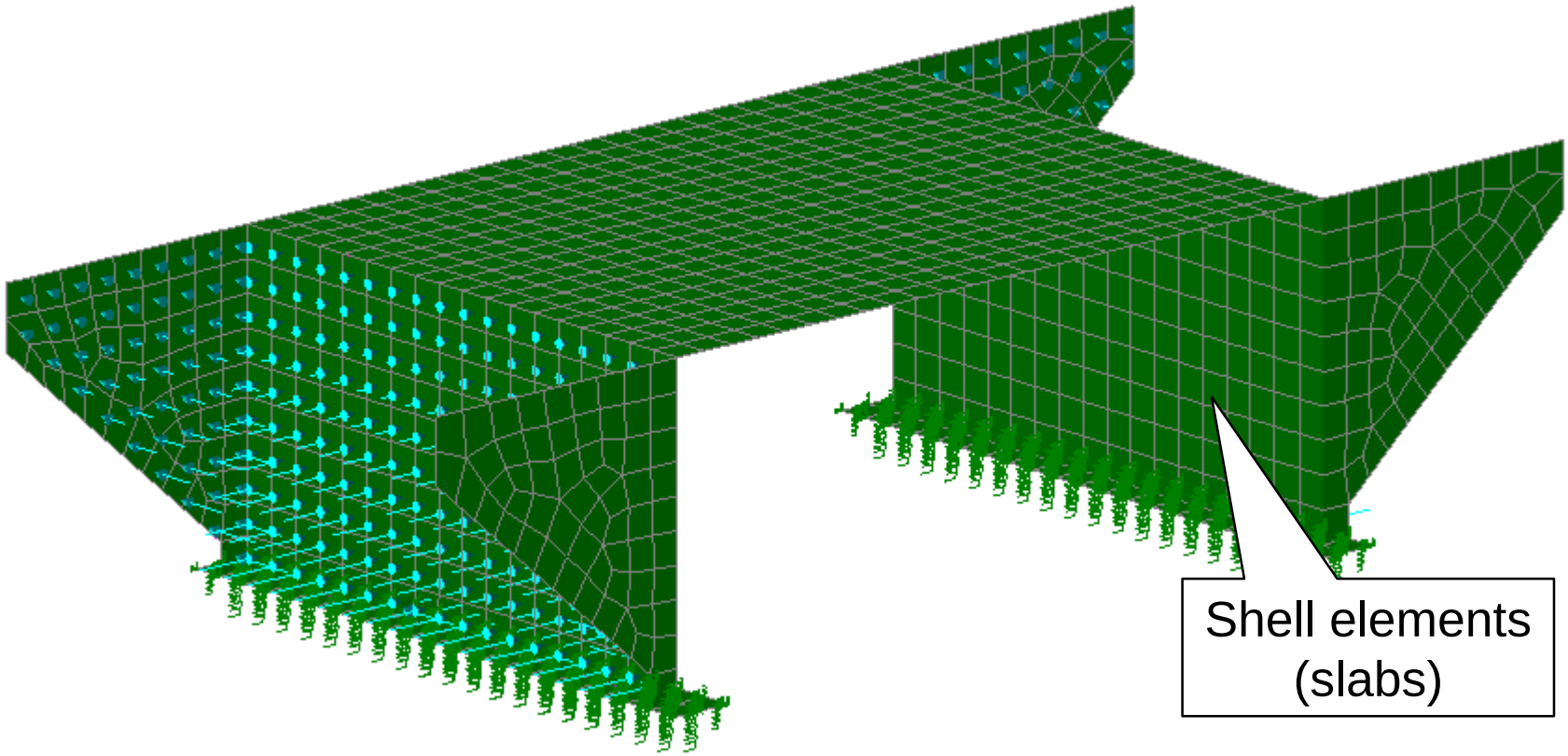

K* approach not adequate

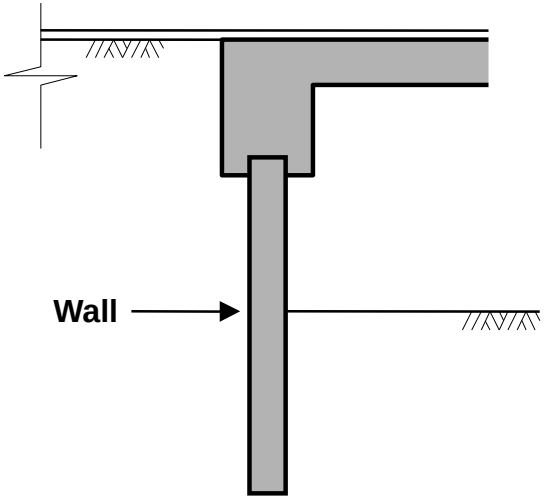

Embedded wall integral abutment

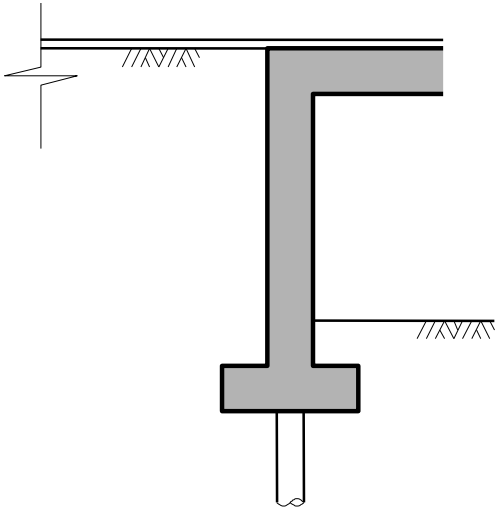

Full height integral abutment on single row of piles

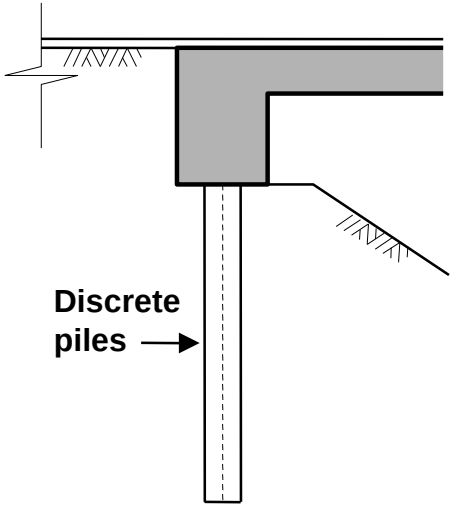

Bank pad on single row of piles

2 – SSI with soil continuum

2D Beam elements

Material Key

- Weald clay
- Tilgate
- Sands
- Limestone
- Concrete

Check extents

Plane strain elements

2 – SSI with soil continuum

Mesh checks

1. Width & depth of soil block
2. Element shapes and aspect ratios

Avoid angles <30°

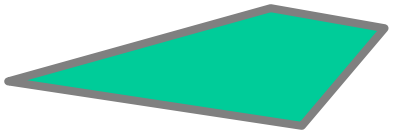

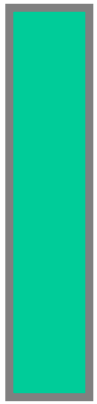

1:1 ideal

1:3 max (areas of interest)

1:10 max (remote)

3. Mesh refinement
4. Element formulation – quadratic better

Need automatic re-meshing

2 – SSI with soil continuum

2D Beam elements

Material Key

- Weald clay
- Tilgate
- Sands
- Limestone
- Concrete

Check shape & refinement

Check extents

Plane strain elements

2 – SSI with soil continuum

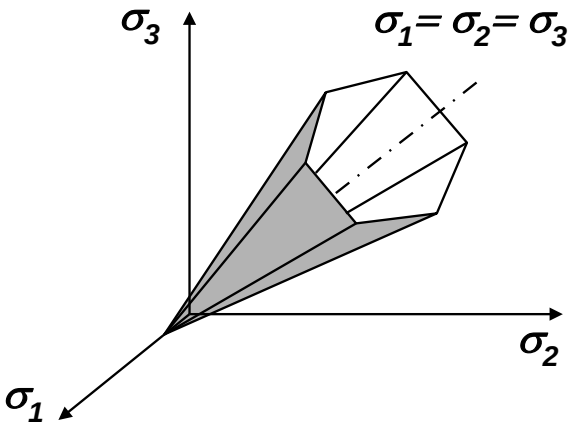

Mohr Coulomb yield surface

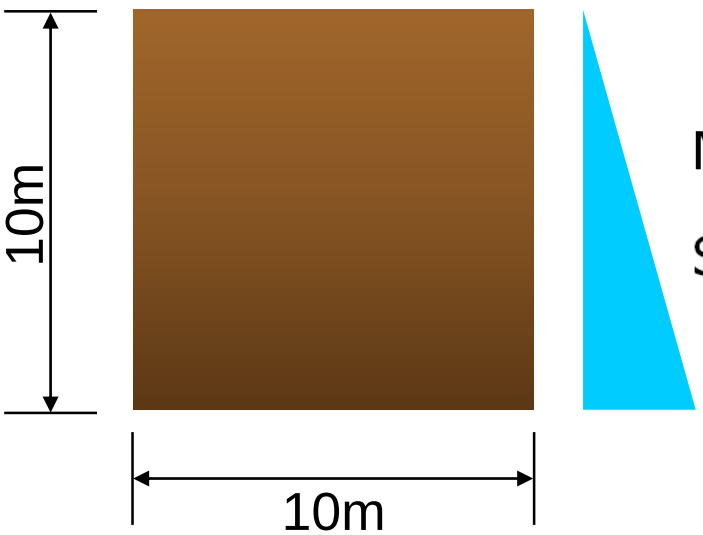

Vertical stress at 10m depth

$S_Y = \rho g H = 1.8 \times -9.81 \times 10 = -176.58\text{kPa}$

Initial lateral stress at 10m depth

$S_X = S_Z = K_o \times S_Y$ where $K_o = 0.5$ ($\phi' = 30°$)

$= 0.5 \times -176.58 = -88.29\text{kPa}$

Maximum (final) lateral stress at 10m depth

$S_X = S_Z = K_p \times S_Y$ where $K_p = \frac{1+\sin\phi'}{1-\sin\phi'} = 3.0$

$= 3.0 \times -176.58 = -529.74\text{kPa}$

2 – SSI with soil continuum

Analysis: Analysis 3
Loadcase: 1:Loadcase 1 (Copy 2), Increment 1
Results file: e201Fr1 SI test soil block (Mohr-Coulomb)~Analysis 3.mys
Entity: Stress - Plane Strain
Component: SX (Units: kN/m²)

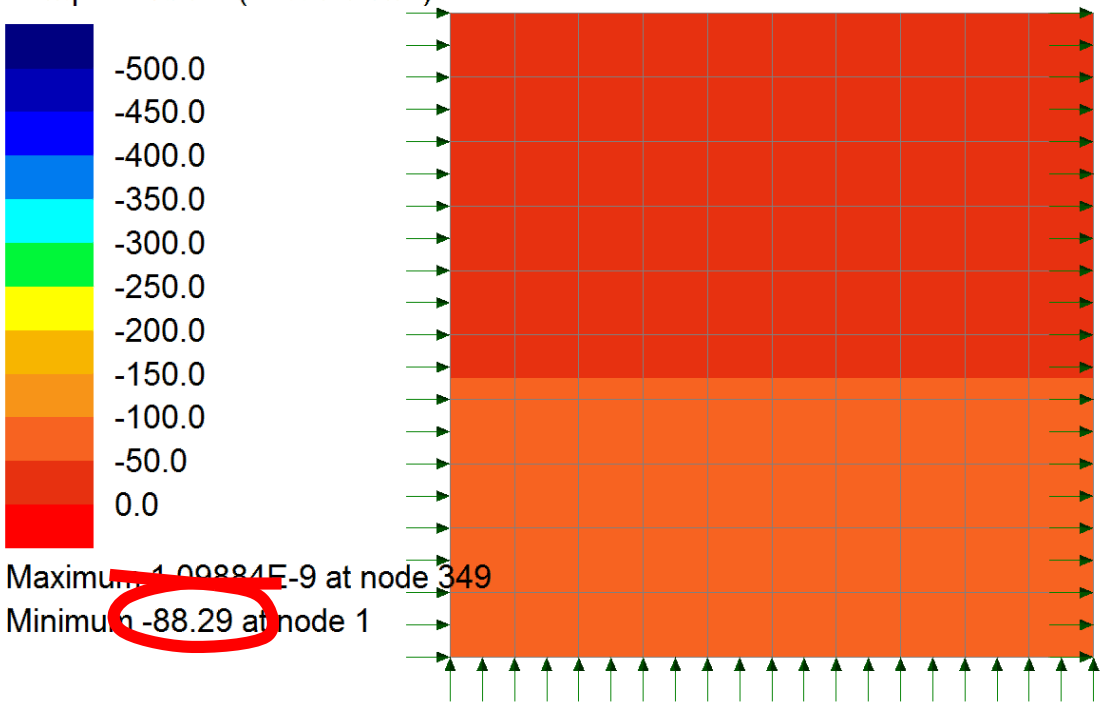

2 – SSI with soil continuum

2D Beam elements

Material Key

- Weald clay
- Tilgate
- Sands
- Limestone
- Concrete

Check shape & refinement

Mohr-Coulomb material

Check extents

Plane strain elements

2 – SSI with soil continuum

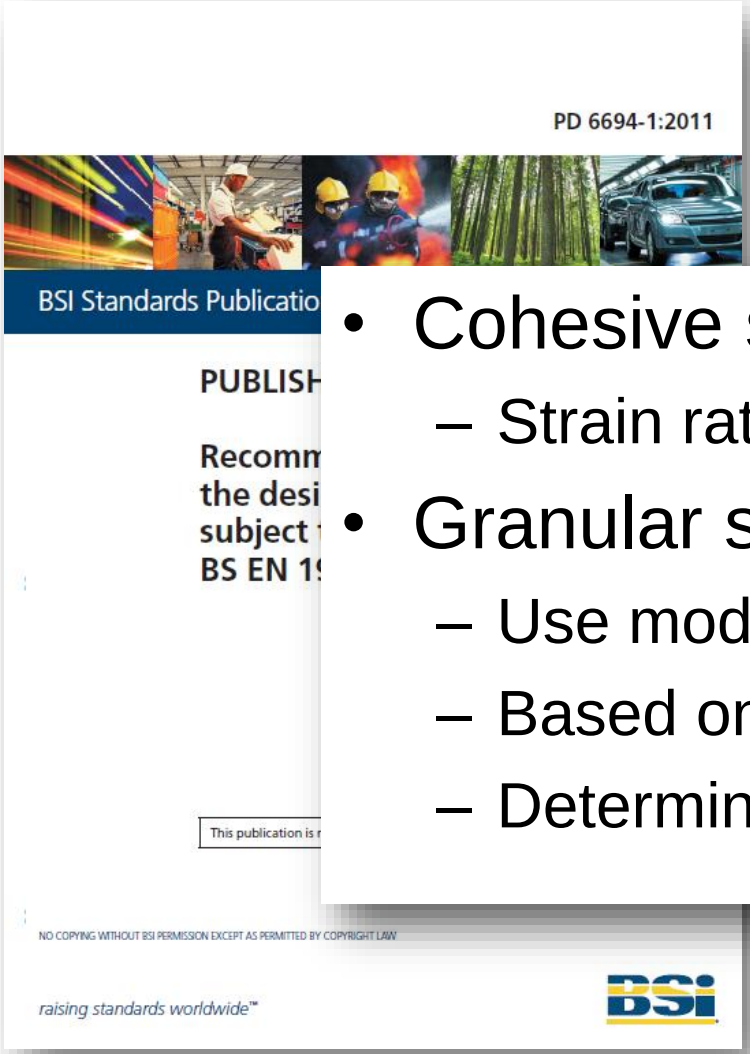

- Cohesive soils
  - Strain ratcheting may be ignored
- Granular soils
  - Use modified elastic modulus
  - Based on K* equations
  - Determine effective height, H, iteratively

2 – SSI with soil continuum

Material Key

- Weald clay
- Tilgate
- Sands
- Limestone
- Concrete

Check shape & refinement

2D Beam elements

Modified elastic modulus*

Mohr-Coulomb material

Check extents

Plane strain elements

2 – SSI with soil continuum

- Interface between soil and structure
  - Joint elements
  - Contact slidelines
  - Elasto-plastic interface materials
- Back of wall friction angle, δ
  - Maximum $\delta=\varphi'$
  - Smooth $\delta=0$
  - Suggested $\delta=\varphi'/2$

2 – SSI with soil continuum

Frictional interface
δ=φ'/2

2D Beam elements

Material Key

- Weald clay
- Tilgate
- Sands
- Limestone
- Concrete

Check shape & refinement

Modified elastic modulus*

Mohr-Coulomb material

Check extents

Plane strain elements

K* approach not adequate

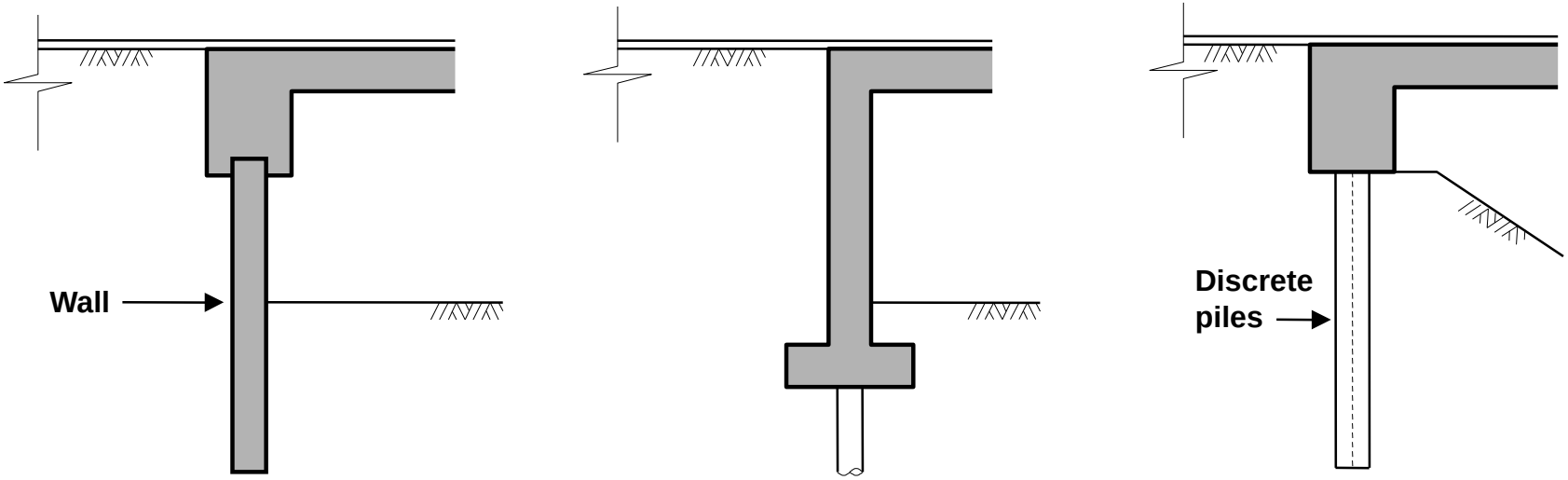

Embedded wall integral abutment

Full height integral abutment on single row of piles

Bank pad on single row of piles

Continuum

Soil modeled with nonlinear springs

3 – SSI with soil springs

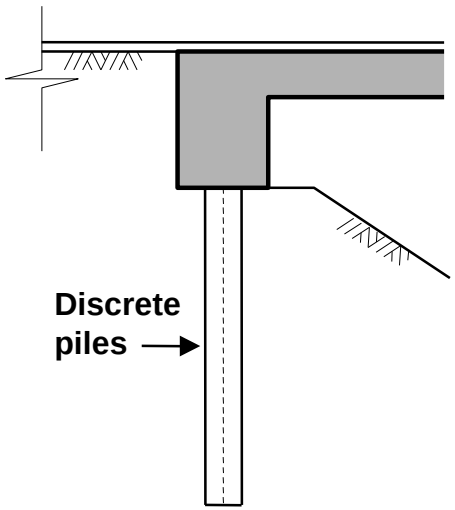

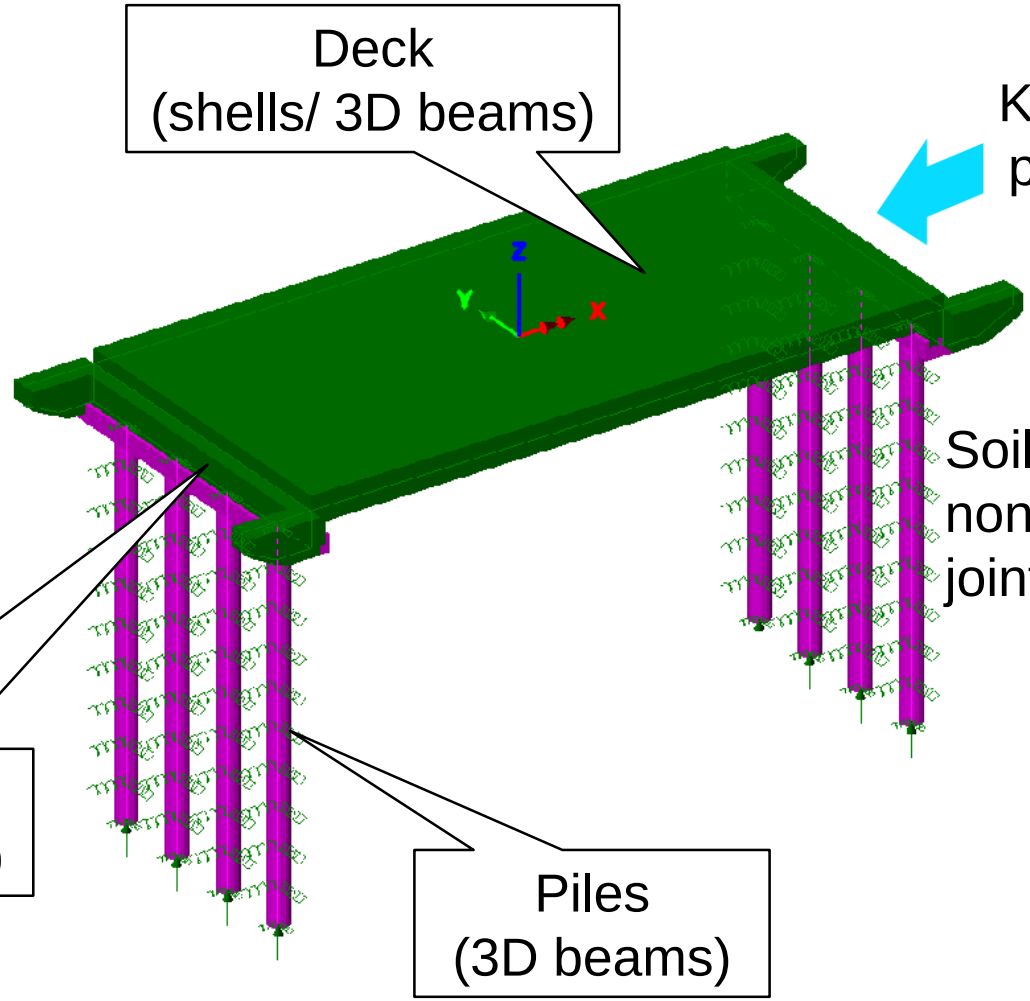

Deck
(shells/ 3D beams)

Ka and K*
pressures

Soil springs /
nonlinear
joints

End screens
(shells/ 3D beams)

Piles
(3D beams)

3 – SSI with soil springs

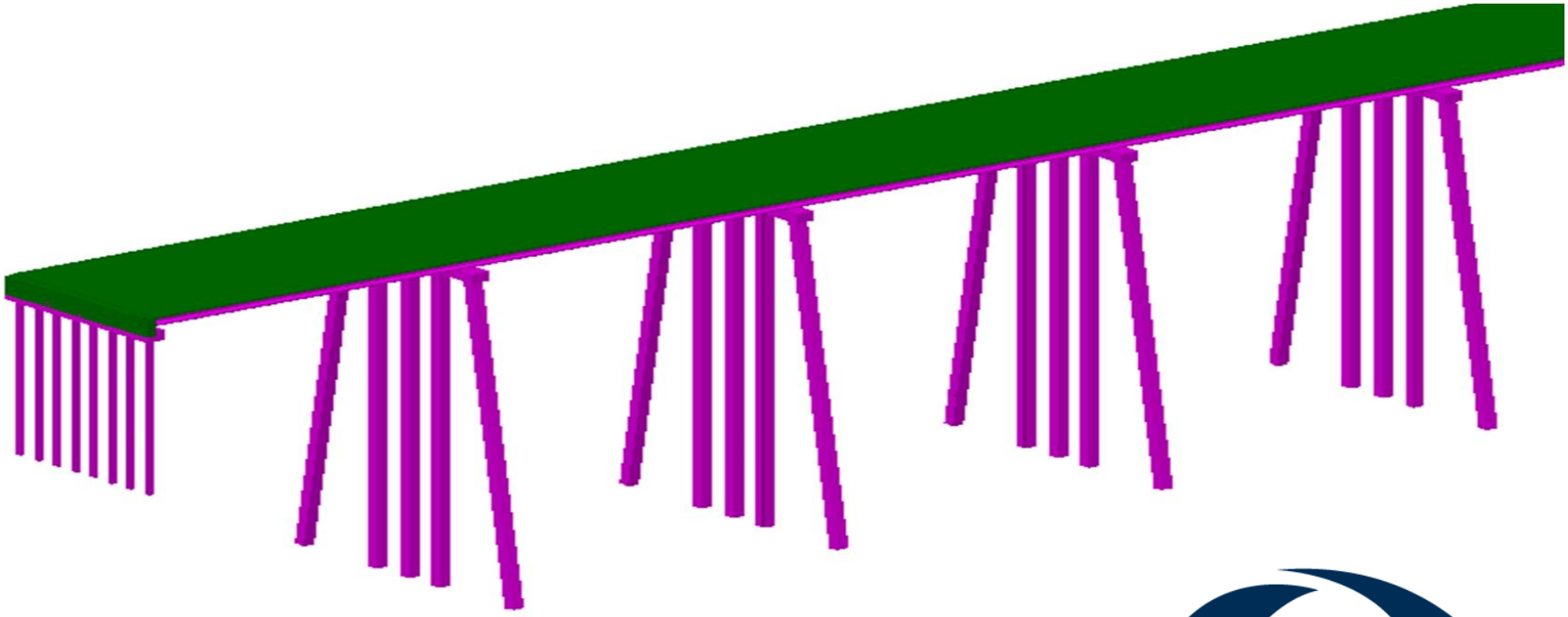

MODJESKI and MASTERS
Experience great bridges.

3 – SSI with soil springs

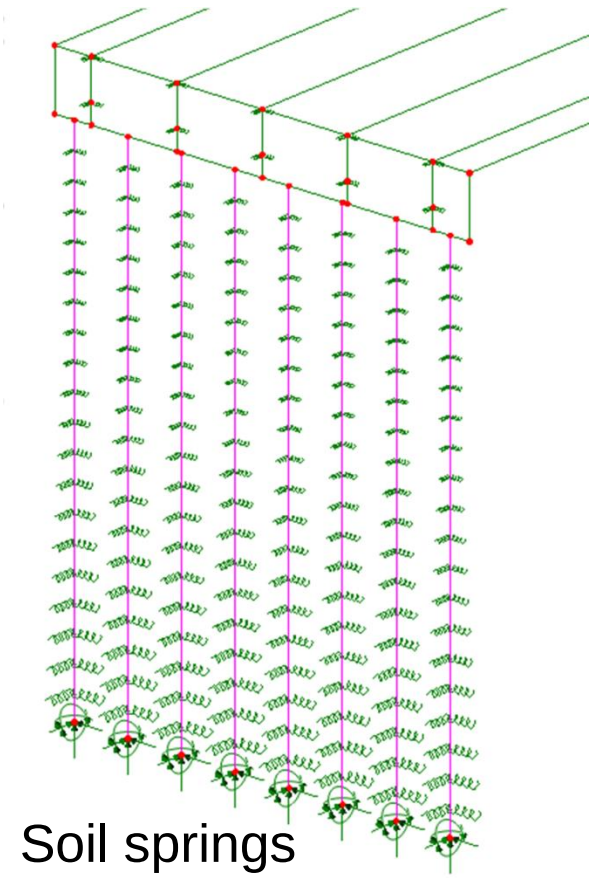

Soil springs

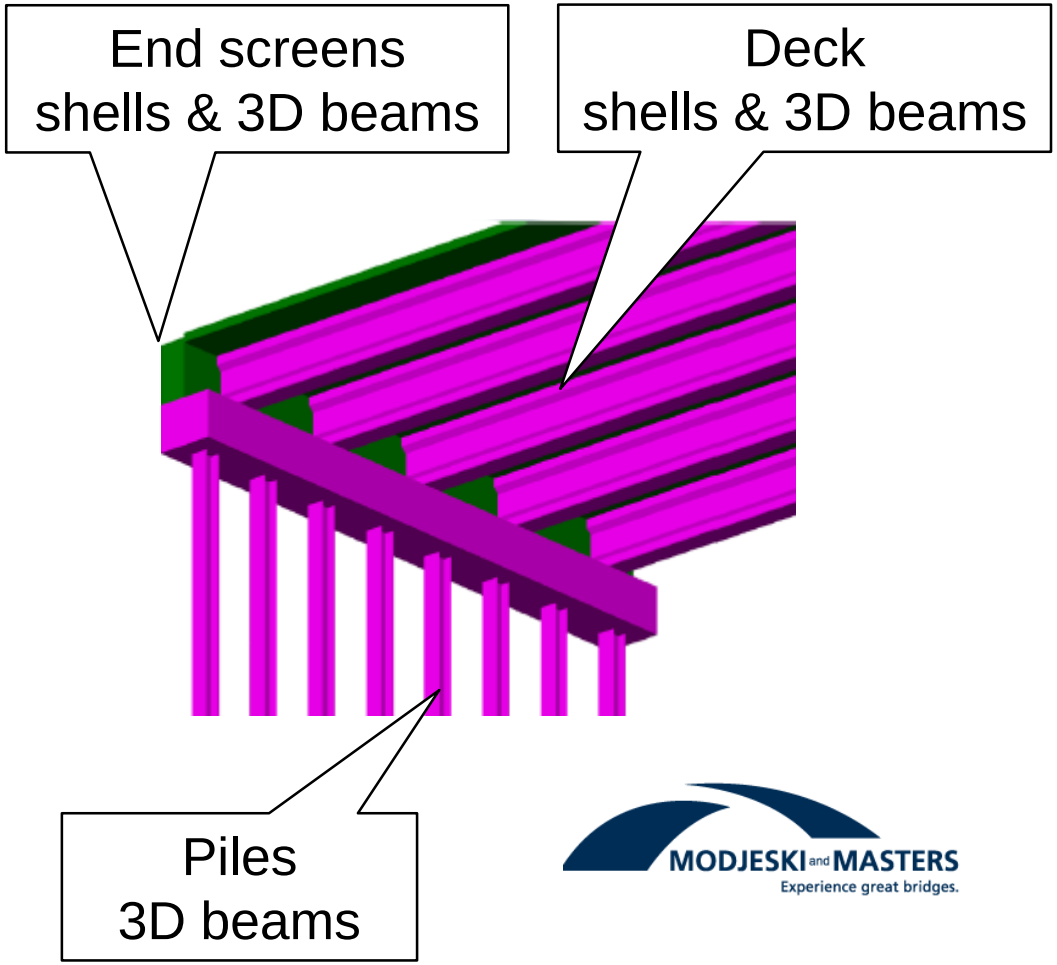

MODJESKI and MASTERS
Experience great bridges.

3 – SSI with soil springs

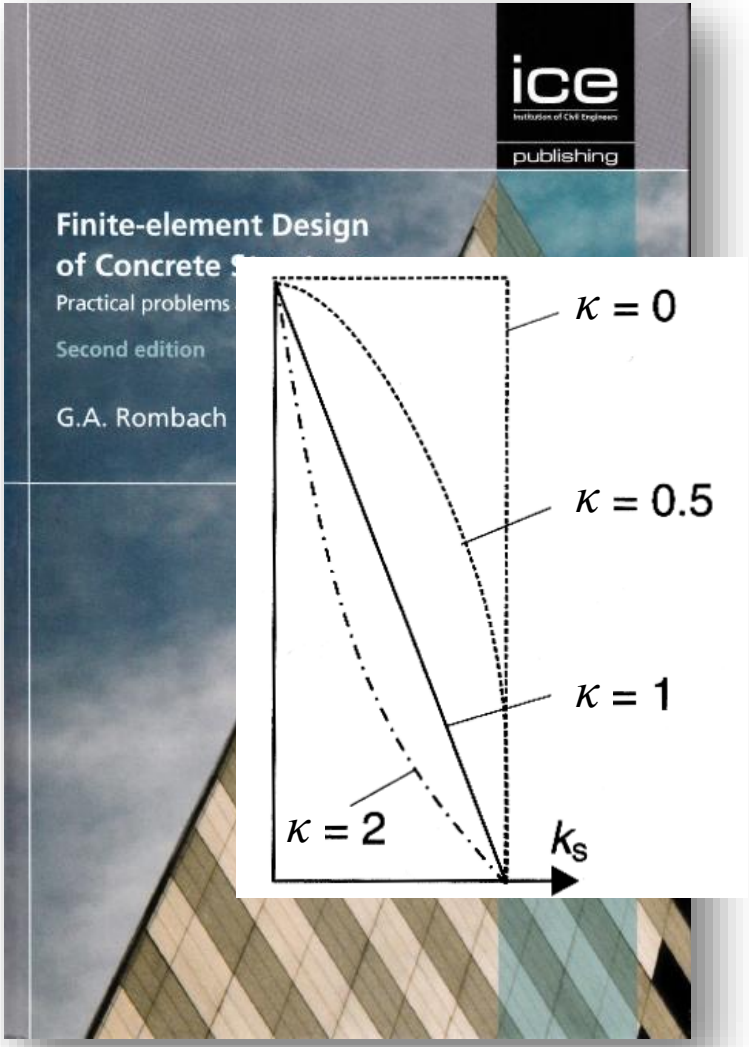

$$k_h = A + Bz^{\kappa}$$

κ = 0 for cohesive soil under moderate loads

κ = 0.5 for medium cohesive soil and non-cohesive soil above water table

κ = 1.0 for non-cohesive soil below the groundwater level or under greater loads

κ = 1.5-2.0 for loose non-cohesive soil under very high loads

3 – SSI with soil springs

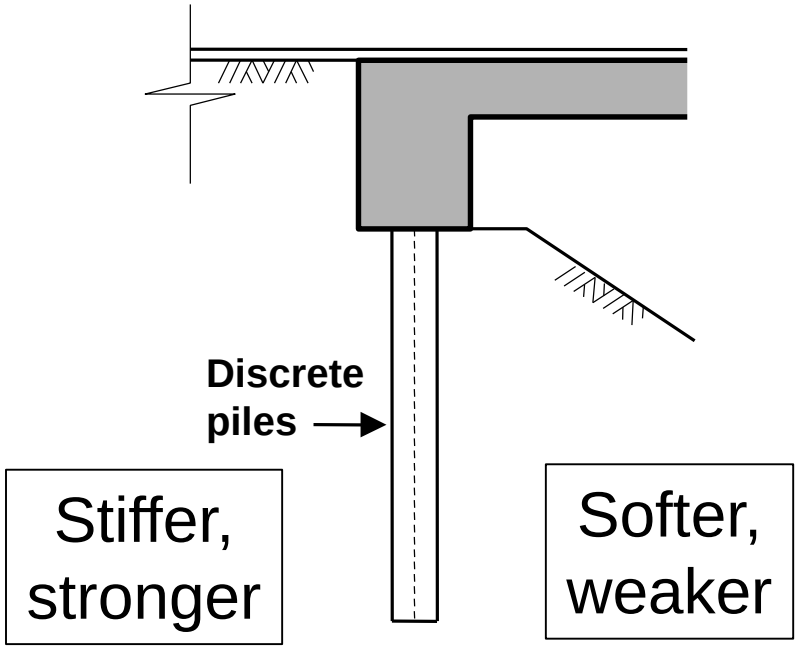

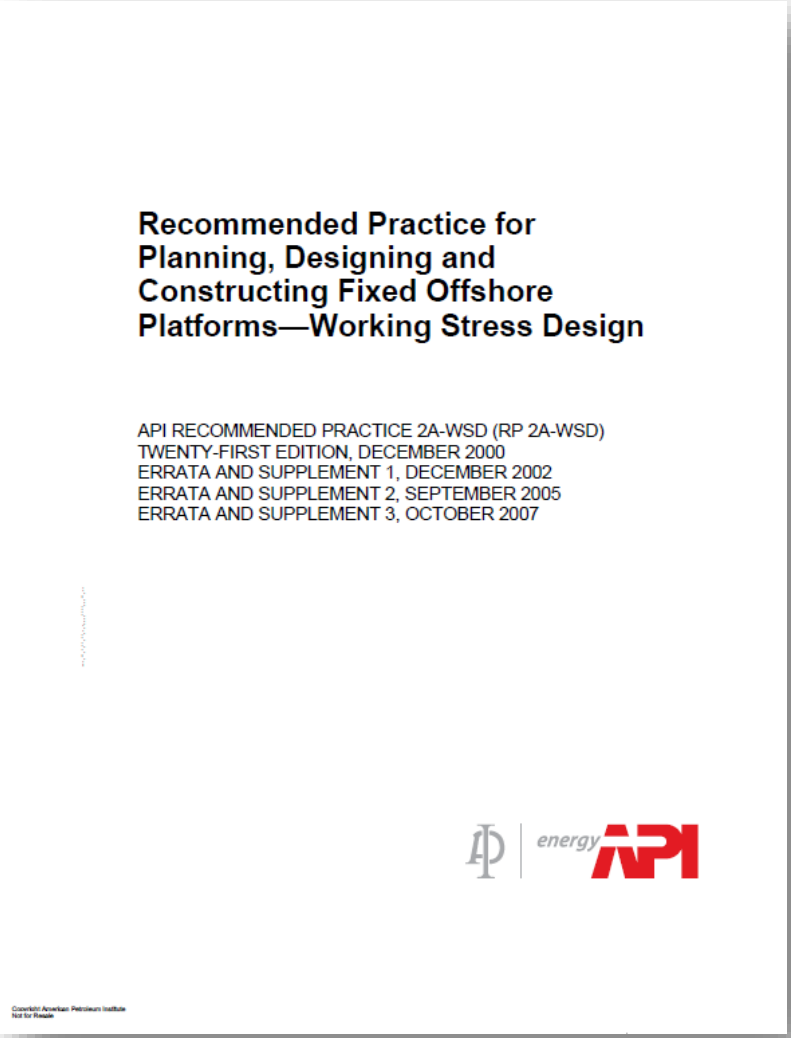

Recommended Practice for Planning, Designing and Constructing Fixed Offshore Platforms—Working Stress Design

API RECOMMENDED PRACTICE 2A-WSD (RP 2A-WSD)
TWENTY-FIRST EDITION, DECEMBER 2000
ERRATA AND SUPPLEMENT 1, DECEMBER 2002
ERRATA AND SUPPLEMENT 2, SEPTEMBER 2005
ERRATA AND SUPPLEMENT 3, OCTOBER 2007

energy API

3 – SSI with soil springs

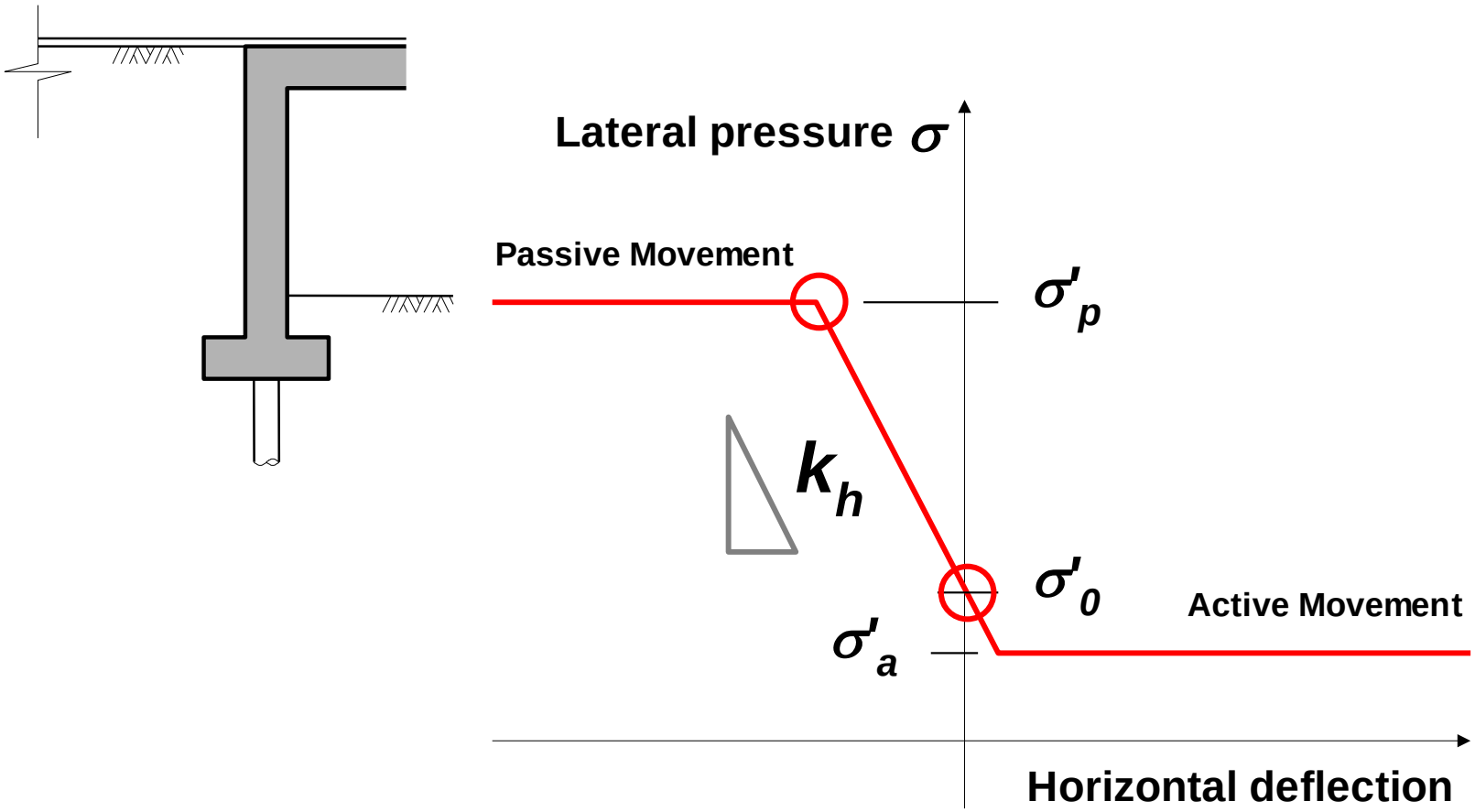

3 – SSI with soil springs

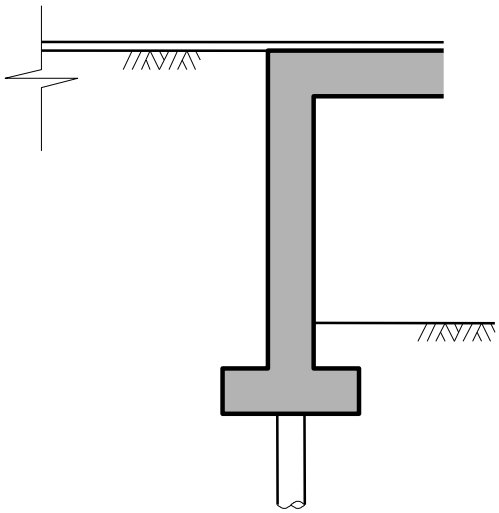

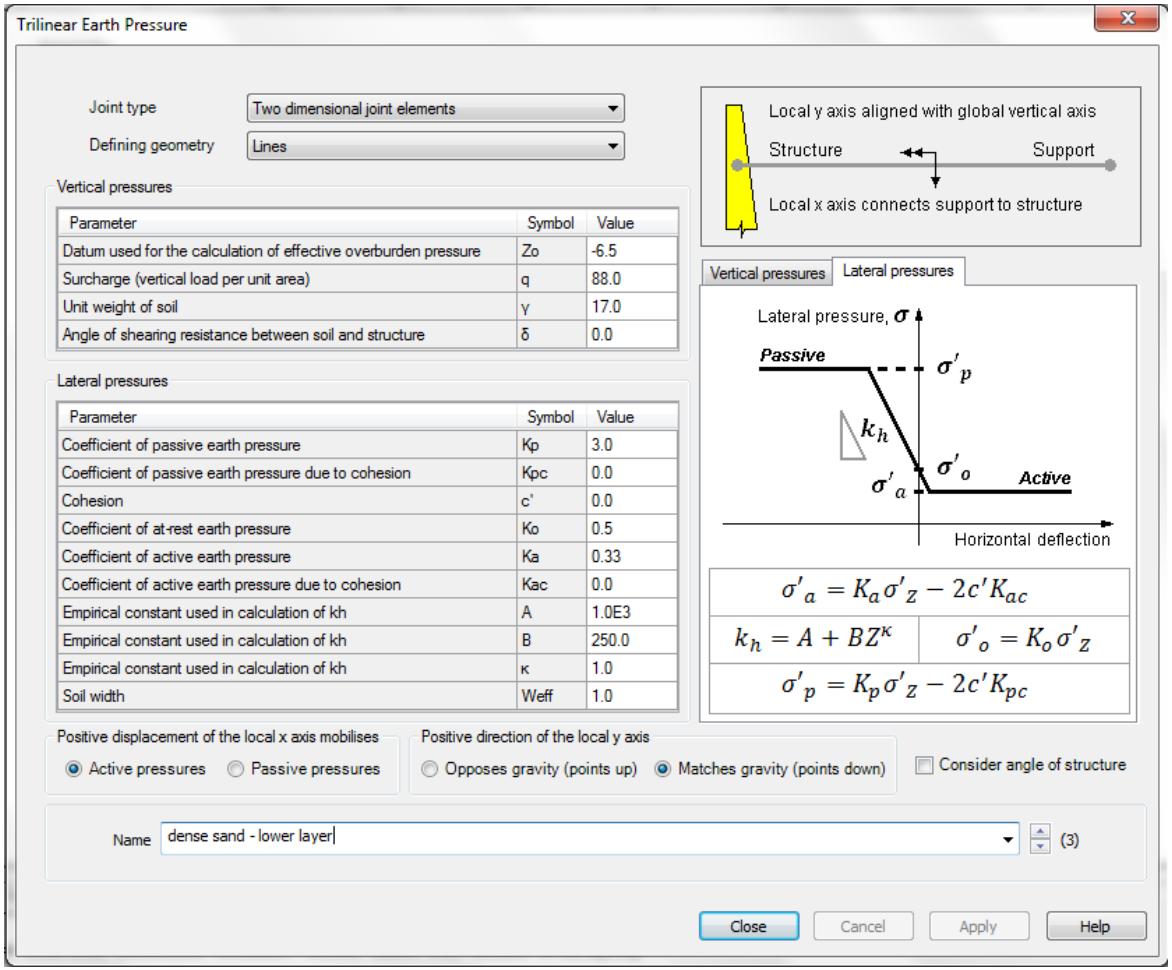

Parameter	Symbol	Value
Datum used for the calculation of effective overburden pressure	Zo	-6.5
Surcharge (vertical load per unit area)	q	88.0
Unit weight of soil	γ	17.0
Angle of shearing resistance between soil and structure	δ	0.0

Parameter	Symbol	Value
Coefficient of passive earth pressure	Kp	3.0
Coefficient of passive earth pressure due to cohesion	Kpc	0.0
Cohesion	c'	0.0
Coefficient of at-rest earth pressure	Ko	0.5
Coefficient of active earth pressure	Ka	0.33
Coefficient of active earth pressure due to cohesion	Kac	0.0
Empirical constant used in calculation of kh	A	1.0E3
Empirical constant used in calculation of kh	B	250.0
Empirical constant used in calculation of kh	κ	1.0
Soil width	Weff	1.0

Software requirements

- Structural elements (beams, shells)
- Geotechnical elements (joints, springs, continuum)
- Automatic remeshing
- Nonlinear materials (e.g. Mohr Coulomb)
- Easy way to vary properties with depth

Summary

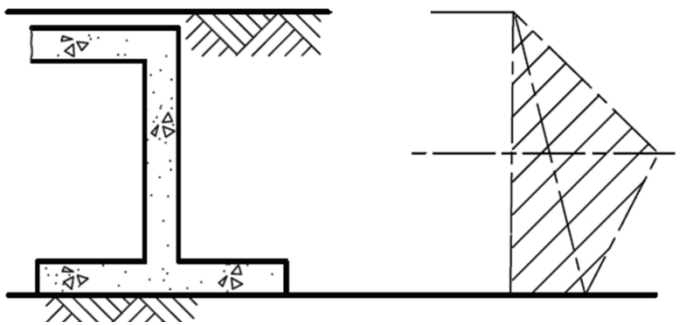

$$K^* = K_o + \left(\frac{Cd'd}{H}\right)^{0.6} K_{p;t}$$

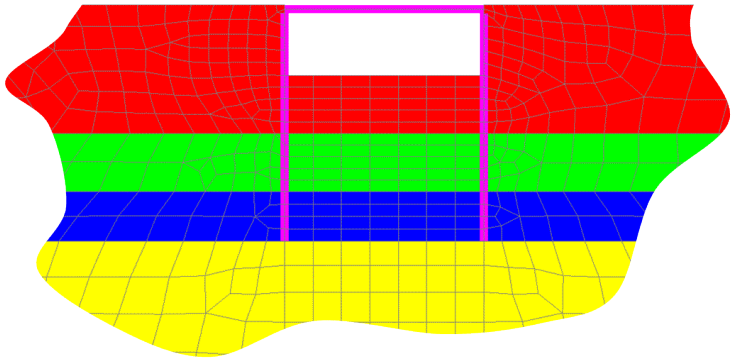

Soil continuum

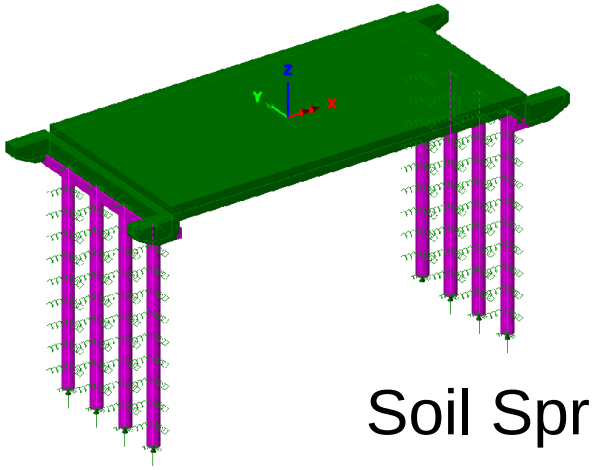

Soil Springs

UK Guidance: PD6694-1