Tracing load path in a concrete truss bridge and developing design for a typical node: reference to the FIU Pedestrian Bridge that collapsed in March 2018

Hari Prasad Pokharel, Associate Technical Director, Arcadis Australia Pacific, Sydney, Australia

ABSTRACT

The focus of this paper is to discuss design requirements for a typical node of a concrete truss bridge, to achieve robust, stiff and durable performance in an elegant pedestrian crossing. Geometrical configuration at a node demands the skillful art of balancing the demand of aesthetic appearance, understanding the mechanism how loads are transferred between members, applying appropriate parameters on the theories of engineering science and accommodating the necessary reinforcement inside the concrete surface. The building industry should not discourage adopting innovative solutions consisting of a concrete truss in new bridge projects, influenced by the collapse of a pedestrian bridge at the Florida International University in March 2018. Good design can be developed to build elegant bridges successfully.

1 BACKGROUND AND PURPOSE

0n 15th March 2018, a pedestrian bridge made of precast, post-tensioned concrete collapsed at the Florida International University, FIU, Sweet Water campus, Florida, United States of America. The news spread fast and drew the attention of bridge engineers all over the world. Figure 1 shows a typical photograph published by Australian Broadcasting Corporation, ABC, and Sydney Morning Herald here in Australia (1,2,3). Discussions among engineers focused on exploring the causes of this frightening event and the lessons to be learnt from this. United States National Transportation Safety Board, NTSB, initiated an investigation immediately. The initial report of the investigation published recently (4) indicated that the strength of concrete and steel in the members of the damaged bridge were as required in the design documents. Causes of the collapse are still under investigation and has not yet been made public.

Figure 1 - Collapsed FIU Pedestrian Bridge (Photo – ABC)

Concrete truss bridges have a benefit of low magnitude of vibrations induced by pedestrian walking and can achieve durable maintenance free performance in a corrosive coastal environment among other merits. Selection of bridge type for a location is generally based on comparative assessment of competing types with weighted scores against various performance criteria. This collapse in FIU should not prejudice the use of concrete truss in future bridge projects. Concrete truss bridge can be designed and built successfully to last longer than a similar steel truss bridge with minimum maintenance cost.

This paper is an attempt to discuss structural design requirements for a node. Engineering principles established in the current bridge design codes if applied appropriately in developing new design details, the nodes of concrete truss can become robust, safe and meet the structural requirements.

2 GEOMETRY OF CONCRETE TRUSS BRIDGE AND A NODE

Details of a bridge span submitted by MCM and Figg Design-Built team to the Florida International University, is available in the university web site (5). Figure 2 represents a span elevation of truss and its cross section. The roof canopy consists of a curved slab of uniform thickness folded at the edges. The bottom deck slab for the pedestrian walkway has variable thickness. Diagonal inclined members, connecting the bottom slab with the roof canopy have rectangular cross sections. Figure 3 shows the end support arrangement at one support with two elastomeric bearings. At the second support, the deck is resting on a mortar pad with vertical ties in to the column below.

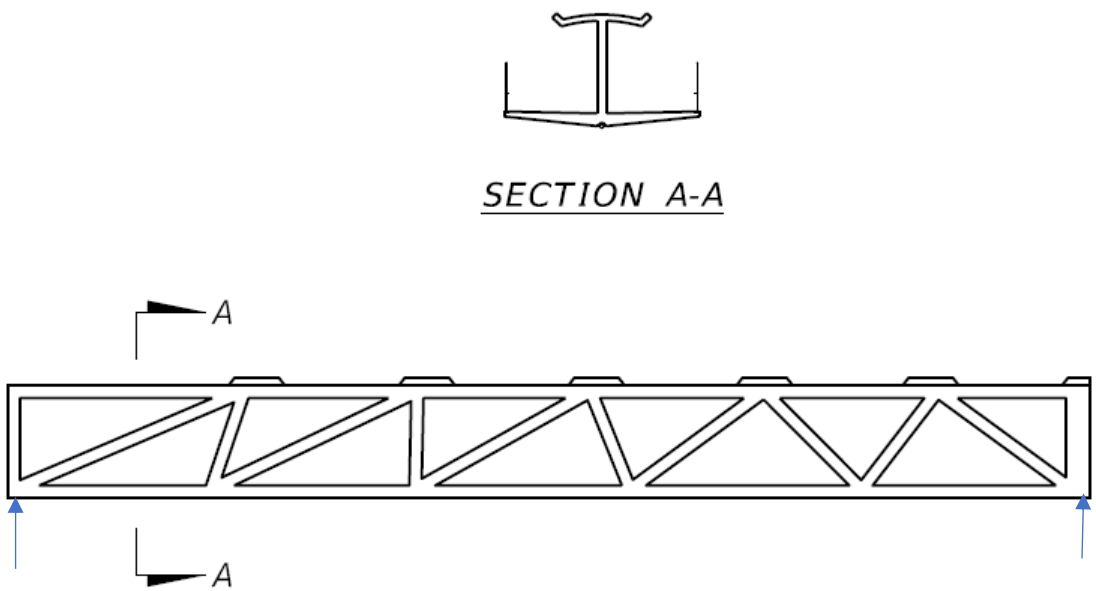

Figure 2 - Elevation of Concrete Truss and Cross Section

Connection of diagonal members with the roof canopy and the bottom deck forms a node. Large forces are transferred between members at the node and the behavior of the node under those forces is a complex phenomenon. Cable-stayed bridges with single rows of cables connected to a segmental box girder bridge deck have similar nodal connections and have been successfully designed. Although the nature of loads in cable stayed bridges are different to the forces in this truss, the engineering principles governing the design are same, and can be applied to a node in this type truss bridge.

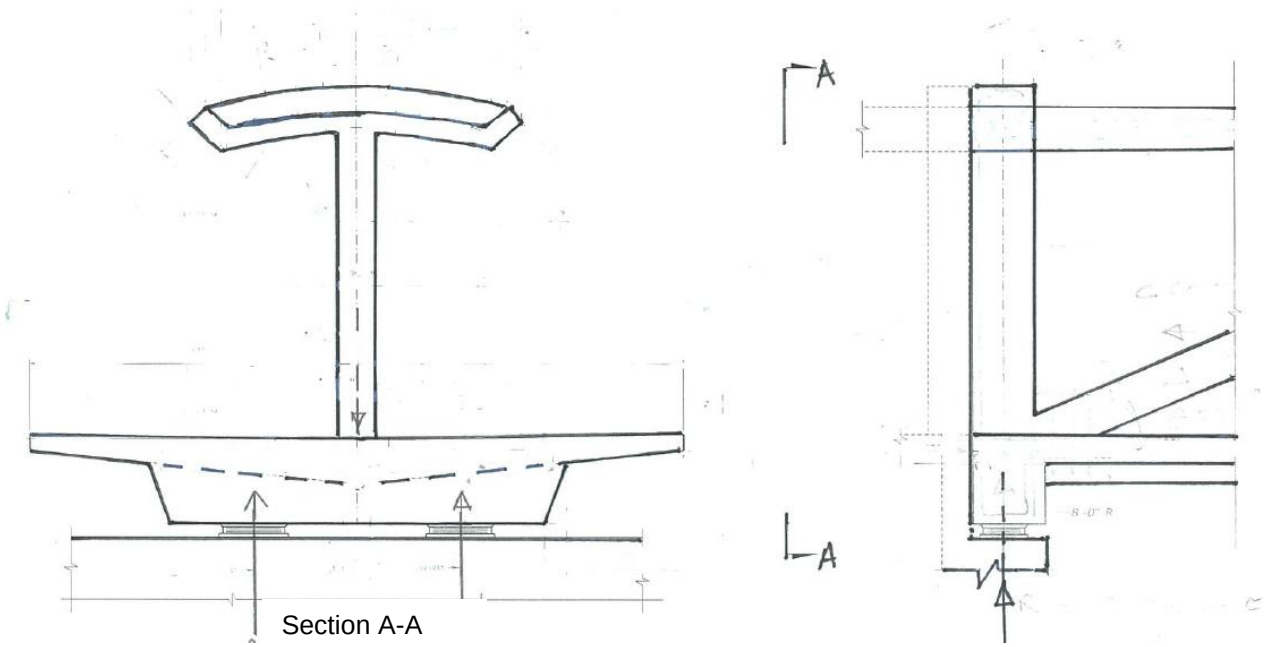

Figure 3 - End Support Arrangement

Geometrical shape and member sizes are heavily influenced by the architectural requirements in a complex landmark structure like this. Adequacy of the structure for the magnitude of forces imposed on it and load path are evaluated rigorously. In the process of transferring loads, material deformation should not exceed certain limits.

3 DESIGN PHILOSOPHY

Most bridge design codes, including Australian Bridge Code AS5100 (6), are created to assure safety of bridge during the life of structures for its intended use. Design philosophy adopted under limit state method of design requires the bridge to sustain significant deformation, before it collapse should it be overloaded. Concrete failure in shear and compression is brittle, but with proper detail of reinforcement ductility can be improved.

To assure safety in design, should a member fail in the structural system, alternate load paths are created preventing collapse, despite excessive deformations.

Failure modes in compression and shear are brittle, they are less predictable, and should be avoided. Therefore, they have smaller values of strength reduction factors. Failure in tension and bending are ductile, more predictable, and are the preferred mode of failures. Should there be a need justified not to have alternate load path, the strength reduction factors are further reduced, means structural members required extra capacity.

Modern bridge design codes, such as Australian Bridge Design Code, AS5100-2017 have detailed prescription how compression and tension capacities of reinforced concrete members can be determined, including Strut-Tie and Node requirements. We can use these to confirm the capacity of the concrete truss and achieve the design outcome expected by the code.

4 NATURE AND MAGNITUDE OF MEMBER FORCES ASSOCIATED TO A NODE

In our discussion, we will investigate a node in a 50m span, 6m high truss with 170KN/m dead load and 45KN/m live load.

A node in compression flange connecting two inclined diagonals, shown Figure 4 has been selected for this discussion. Member T representing roof canopy, inclined member X and end diagonal Y are the main load carrying members to the node. Several load cases and load combinations are required to be investigated in determining governing design forces. Loads imposed during construction are carefully assessed, analysing various operations. Often construction stage load governs the design of many bridges elements. For our discussion, co-existing member forces associated with the node at three conditions are summarized in Table 1. The designer evaluates the node for a whole range of forces affecting performance before confirming design outcome.

Table 1 – Co-existing Axial Force in Members Connected to a Node for Three Load Combinations

Member	Self-Weight (MN)	SLS Load (MN)	ULS Load (MN)
T	-7.5	-9.5	-12.4
B	5.2	6.4	8.3
X	4.0	5.1	6.6
Y	-6.3	-7.8	-10.1

Note: Compression is negatives

When a bridge is built in a casting yard and transported to the site to place in its permanent position, it may be placed on temporary supports away from the permanent support locations. When the temporary supports are removed the forces on those internal supports are transferred to other support points. There will be changes in internal stresses and internal strains. Hook's law and constitutive relationship of material shall be maintained. Understanding such load transfer mechanism, history of changing stress in a member and the behavior of material affected by such history requires closer attention to produce a good design.

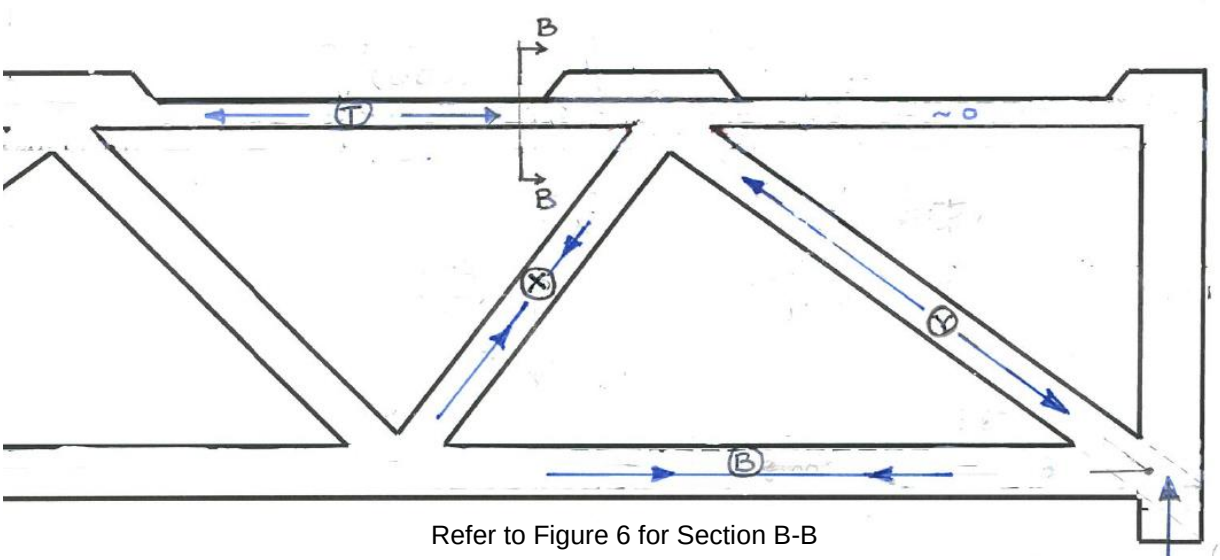

Refer to Figure 6 for Section B-B

Figure 4 - Distribution of Axial Force in Members at Critical Node

5 DESIGN OF MEMBER T AND STRUCTURAL CAPACITY IN COMPRESSION

Axial capacity of a stocky compression member can be determined using Equation-1.

$$\Sigma \gamma F < \varphi (0.85 f'c\ Ac + fs.\ As) \qquad \text{Equation -1}$$

Where,

- γ – Load factor associated with load case
- F - Axial force in member due to individual load case
- φ – Strength reduction factor of concrete member in compression, 0.6
- f'c – 28 days characteristic compressive cylinder strength of concrete, 60MPa for this bridge
- Ac – Effective area of concrete in the compression member
- As – Area of steel within the effective area of compression member
- fs - Stress in reinforcement for design, normally the yield stress of steel

Values of γ and φ are specified by bridge design codes. γ varies for various load combinations, while φ is dependent on the mode of failure.

Figure 5 shows an area of the roof canopy in plan, representing member T, with in-plane stress distribution around the node and how the stress changes closer to the node. Uniformly distributed stress over wider width at left channelize into narrower width towards node. At the node, while there is high compressive stress at the left there also is localized tensile stress behind the node at right. These stresses are concentrated within a small area of canopy. Effective area of concrete, Ac, therefore should be a limited area of canopy, not the whole section width multiplied by the thickness.

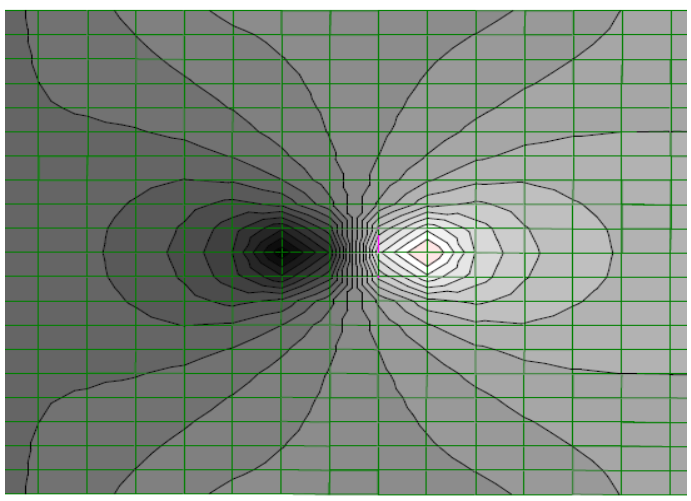

Figure 5 - Longitudinal Stress Distribution in Roof Canopy Slab Around Node

Now the role of design engineer is to be creative, and adjust the geometry to achieve required cross section Ac, contain the required reinforcement, and comply with the requirements of Equation 1 to transfer the load summarised above which varies from 7.5MN to 12.4MN. The deformation resulting from these forces should be controlled to comply with the design philosophy of codes, discussed above.

Cross section B-B of canopy shown in Figure 6 has four different possible geometrical configurations each will give different effective area Ac. In section (a) effective contact area between inclined member and roof is limited to thickness of canopy multiplied by the width of inclined member. In section (d) a longitudinal shallow beam with fillets has been integrally connected with roof canopy. There could be several possible options to explore. Designer can explore these options in the design iteration process and agree the geometrical configuration to balance both structural requirements and aesthetic appearance.

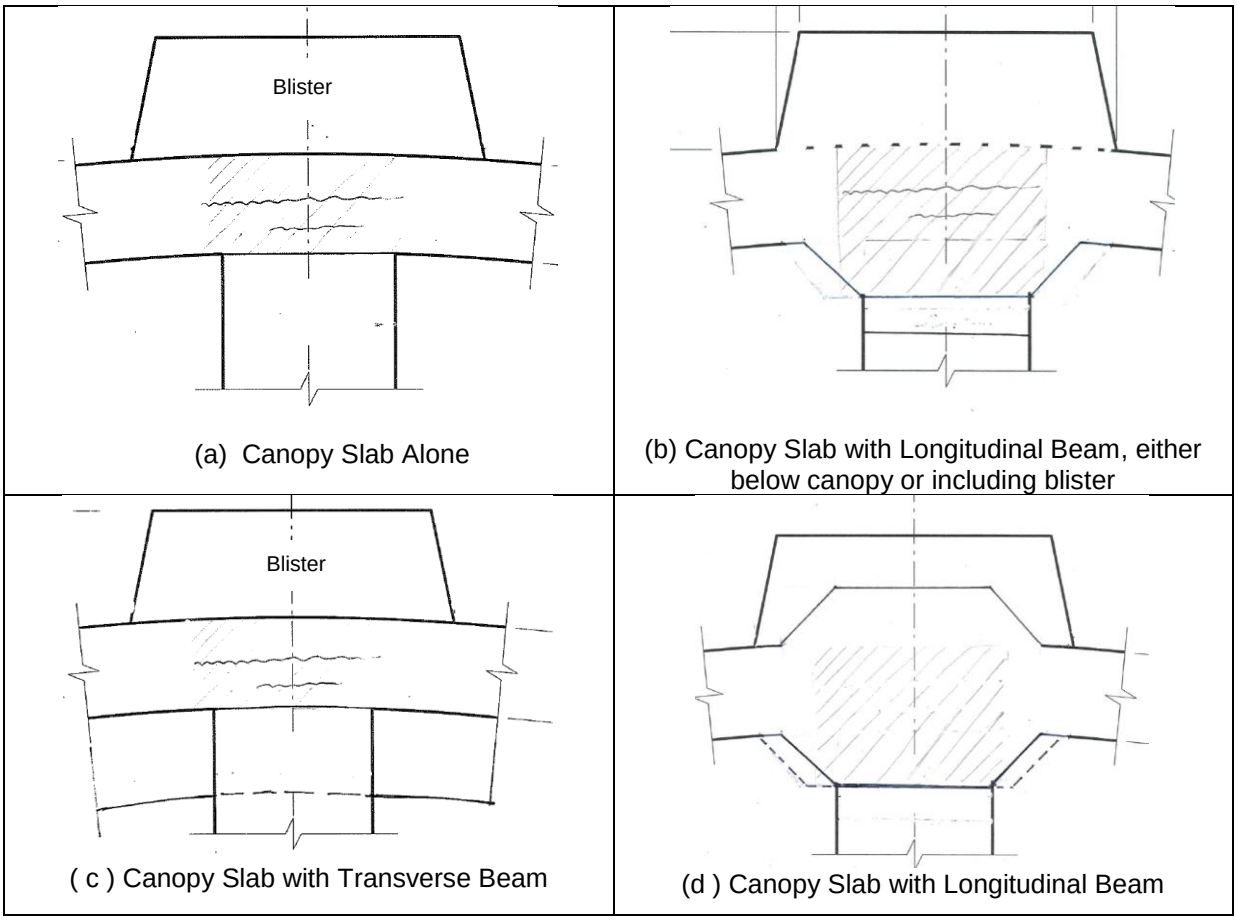

Figure 6 - Geometric Configuration of Node and Effective Area, Ac

Now let us choose section (d) which has an effective area of about 0.4 square metres. Compressive stress in concrete computed as force divided by Ac under three load combinations result stress values 19MPa, 24MPa and 31MPa respectively. The strains resulting from these stresses can be determined from the constitutive relationship curve of a 60MPa concrete.

Under ultimate limit state condition Australian Bridge Design Code AS5100.5 specifies the value of strength reduction factor φ equal 0.6 in compression, the resulting strength become around 31MPa. Under permanent load condition the stress needs to be less than 0.45fc', means 27MPa. Based on the stress under various conditions and the limits imposed by codes we can notice in Figure 7 that the stresses in concrete are reasonably within the elastic range, which confirms that the cross-section area of 0.4 square metres is reasonable. Similarly, other sections can be evaluated to the stress requirements. Designer can place a minimum area of longitudinal steel reinforcement and check other requirements.

Concrete has been considered as an elastic homogenous material with a Poisson ratio, μ, varying between 0.2 to 0.5 depending on the magnitude of stress. Applying the theory of elasticity and using Poisson ratio μ equal to 0.2, tensile stresses induced in the top slab in directions perpendicular to the compression stress σ_x can be estimated as $\mu\ \sigma_x$ (7). A compressive stress of 31MPa, induces tensile stress of more than 6MPa. Tensile strength of concrete, is about $0.36\sqrt{fc'}$, which is about 2.8MPa, for a 60MPa concrete and is less than the stress 6MPa. Such tensile stress deforms the slab internally creating

micro-cracks leading to delamination, as indicated in Figure 6, requiring confinement reinforcement. Stress in reinforcement to transfer tensile stress from concrete to steel is generally limited to 150MPa.

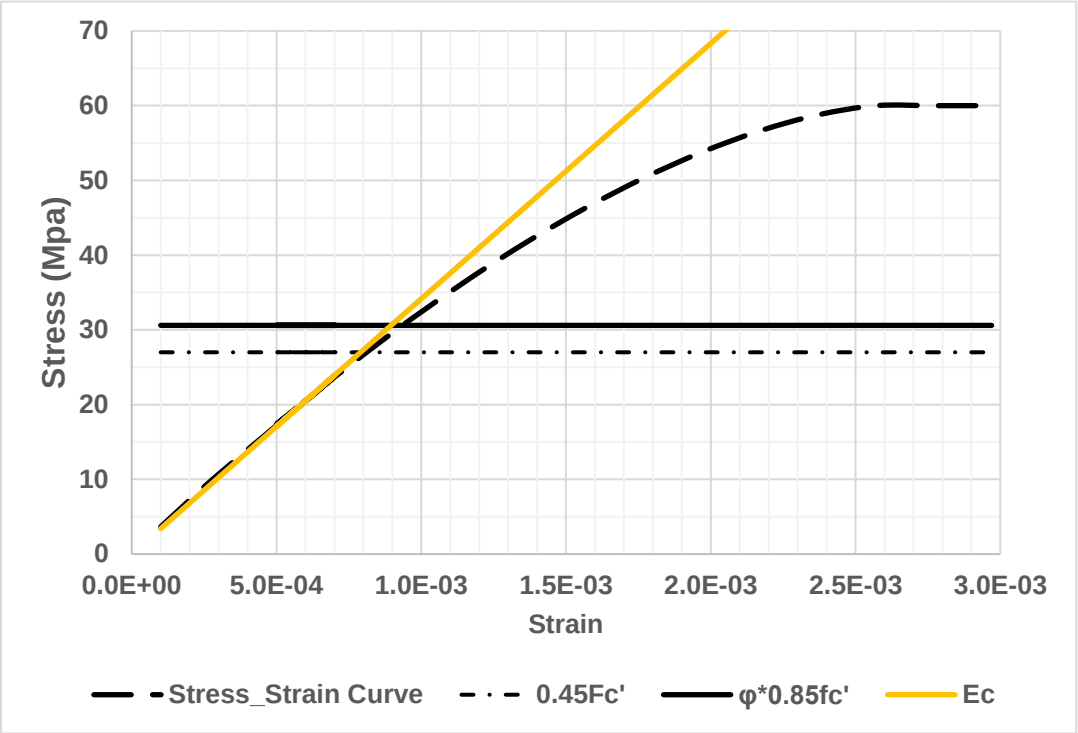

Figure 7 - Stress Strain Relation of 60MPa Concrete

All longitudinal reinforcement, As, placed within the effective area Ac, and counted upon for capacity, needs to extend beyond the node for anchorage and to resist the localized tensile stress which is behind the node shown in Figure 5.

6 DESIGN OF MEMBERS X AND MEMBER Y

Geometry of both members X and member Y are well defined rectangular sections. Member X is a tension member. The tensile strength of concrete is neglected in the design of tension members; therefore, a significant amount of longitudinal steel reinforcement is required. To meet the serviceability limit state conditions and minimising crack widths, post-tensioning arrangement may be the preferred option, which requires anchor plate at the nodes. Splitting stress is induced under the anchor plates, detailing of reinforcement and allowable stress in reinforcement to take such splitting stress specified in design codes affects the geometry of node. Further to the requirements of member capacity, connection of these bars at the node demands careful detailing.

The anchor plate for post tensioning bars or strands needs to be protected from corrosion and, also would not be aesthetically pleasing if exposed. So, they and protrusion bars and nuts must be enclosed within the concrete surface with sufficient cover. Thickness of blister therefore should be assessed to confirm sufficient space to fit all reinforcement including their bends to meet sufficient development lengths.

Axal load capacity of member Y can be checked applying the method discussed above using Equation 1. As this member is a critical member by not having alternate load path, further adjustment of strength reduction factors become necessary to assure safety. Designer are expected to assess the risk and adjust design details and get acceptance from the asset owner knowing the probability of failure and the consequence.

7 STRUT-TIE DESIGN REQUIREMENTS AND NODAL CONFIGURATION

Geometrical configuration of a node must meet specific requirements to transfer forces between members, maintain equilibrium and limit stresses. Figure 8 contains two types of nodal configurations where centre lines of two compression struts, T and Y meet with the centre line of tie X at a common point. We shall evaluate the performances of both configurations to choose one. In the first configuration, load from roof canopy is spread through a segment within the node, considered as pseudo wedge. If there was a transverse beam, the force in roof canopy can be distributed in wider area and reduce the intensity of stress. Vertical splitting stress is induced within the wedge. In the second configuration, as there is a longitudinal beam in the roof canopy, the load is directly transferred to the node. In both cases tension reinforcement from member X are transferred across the node and anchored in the blister above.

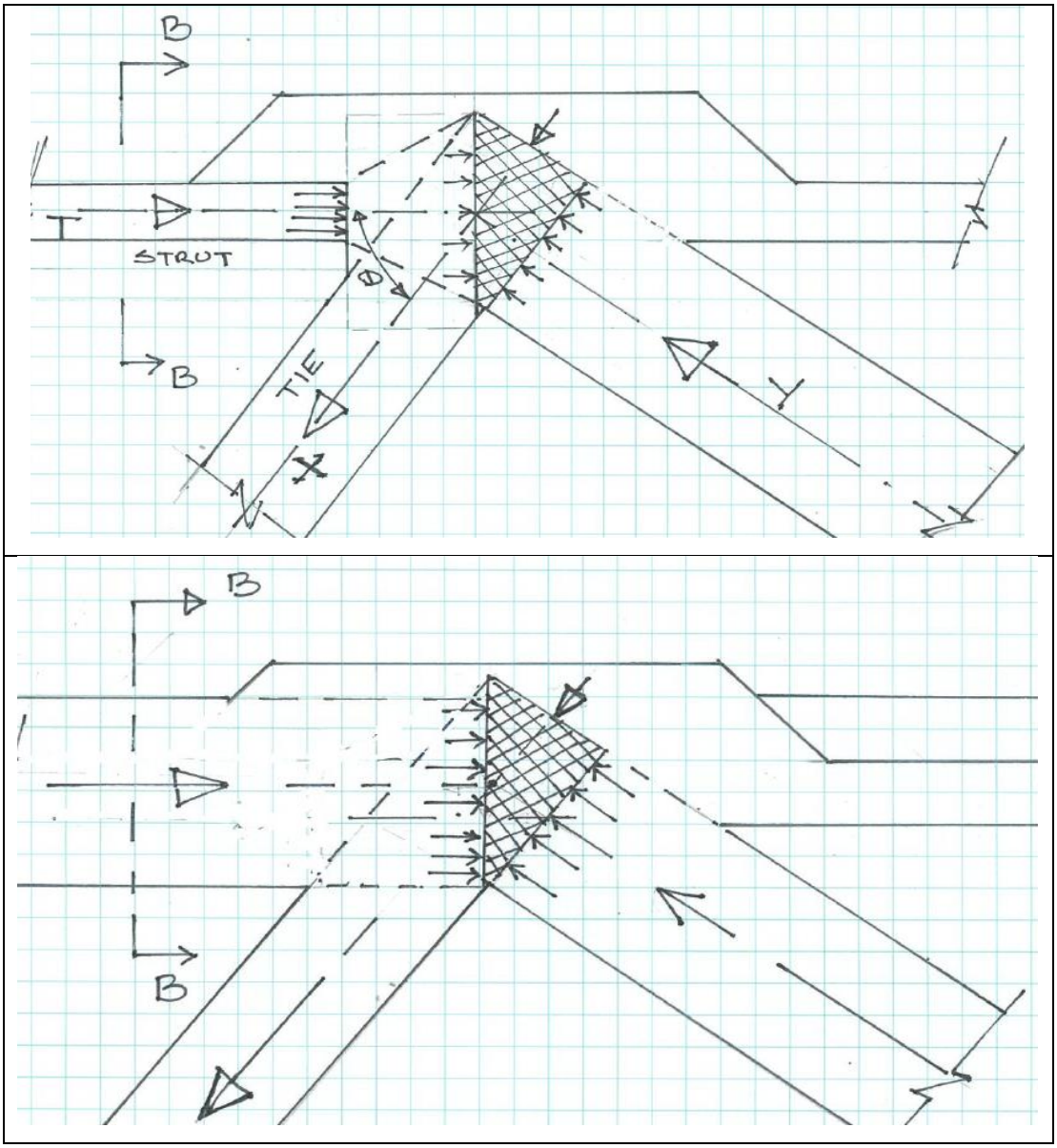

Figure 8 - Geometric Configuration of Node and Stress Distribution (Refer Figure 6 for Section B)

In accordance with the requirements of AS5100.5-2017, the capacity of the compression strut can be determined as -

$\varphi N_u = \Phi_{st} \cdot \beta s \cdot 0.9fc' \cdot Ac$ Equation - 2

Where,

$\Phi_{st} = 0.6$, the strength reduction factor in compression,

βs = strut efficiency factor, that depends on the effectiveness of confinement and an angle between strut and tie, taken as 0.8 here.

Ac = smallest cross section area of compression strut measured normal to the axis.

To meet the capacity requirement of 12.4MN under ultimate limit state load combination, using 60MPa concrete, minimum area, Ac, required for strut T is about 0.50 square metres.

Similarly, for strut Y the ultimate axial capacity requirement is 10.1 MN, and as it makes an angle of 90 degrees with tie and has adequate confinement, βs is equal to 1, required minimum area is 0.32 square metres.

Capacity of ties can be determined considering partial prestress, either high strength bars or strands installed. The reinforcement or prestressing steel crossing the node, i.e. area indicated by hatch, need to be anchored beyond node. If there are normal steel reinforcement, they need to develop full strength before the node.

Should the designer explore stress inside the node, 3D stress analysis can be performed. The principle stress either should be less than the tensile strength of concrete, with appropriate strength reduction factor, or to minimize damage, confinement reinforcement needs be provided for the concrete within the node.

Figure 9 shows an example from a cable stayed bridge with precast segmental box girder deck illustrating how a nodal connection is configured to transfer forces. Compressive stress from top flange, C, is transferred through the internal diaphragm to the node, meeting with cable force from the anchor, T, and the vertical load from live load and dead load acting on deck, W. This arrangement is common in most cable stayed bridges and have been working successfully. Engineering principles in both cable stayed bridge and concrete truss bridge is the same, only the orientation of forces is different.

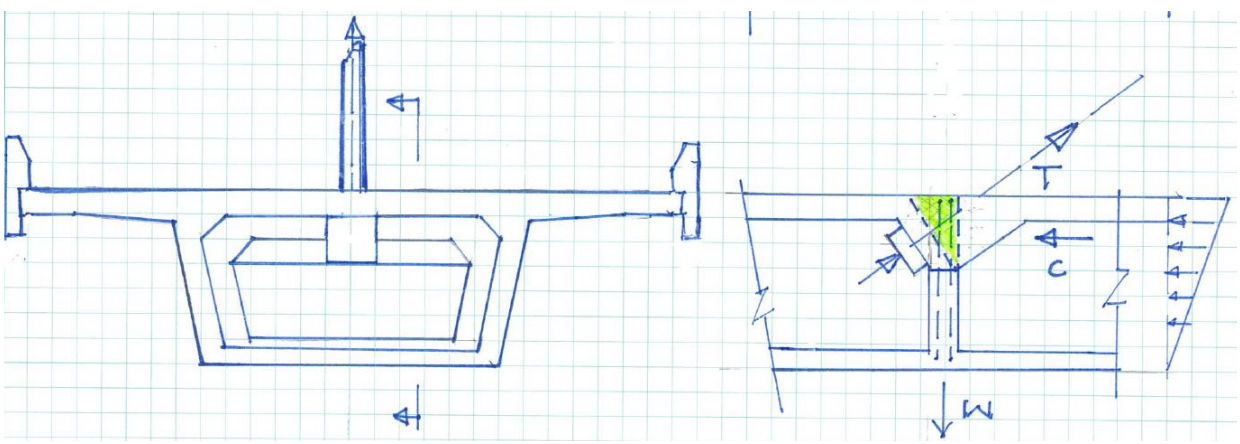

Figure 9 - Nodal Configuration for Connecting Cables in Segmental Bridge Deck

In the examples above the centre line of forces at the node are meeting at a common point. If the geometry is not carefully configured, and the forces are not meeting at a common node, resulting eccentricity will induce large shear force and bending moments that can lead to instability because of not maintaining equilibrium.

8 DETAILING OF REINFORCEMENT AT A NODE

Detaining of reinforcement at the node of concrete truss bridge is a complex art. This art requires deeper understanding of concrete material, magnitude of load and their direction of movement along the load path and placing of reinforcement where concrete strength is deficient. Behaviours of bond between concrete and reinforcement is given little consideration in design codes besides development length and lap lengths, but has a significant effect on performance. Figure 10 indicates a section of a node with typical detail of reinforcement pattern expected.

In Figure 10, anchor plates are not shown for clarity, but must be located at the area near the end of node, corresponding to the position above the hatched area shown in Figure 8.

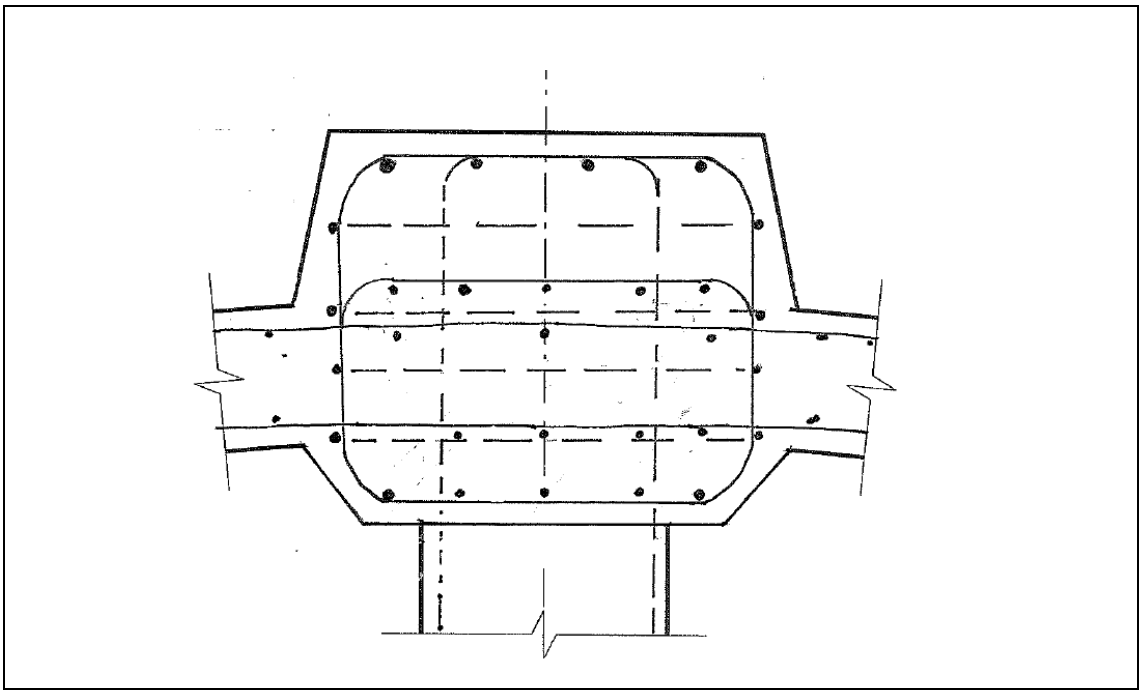

Figure 10 - Typical Reinforcement Pattern in a Vertical Section of Node

9 DESIGN DEVELOPMENT AND INPUT FROM CONSTRUCTION OPERATION

Several factors affect the strength of concrete during the process of batching, placing and curing. Often, testing indicates different strength in a structure to the strength of a test cylinder. Precast concrete is said to have better control in strength, but the changing nature of support condition during transportation alter the nature and size of load affecting integrity of concrete members. Therefore, whole process needs to be properly documented, reviewed and considered as design input.

Design development process requires controlling detailed construction procedure and design verification followed by peer review to eliminate design risks in a new innovative complex bridge.

10 SUMMARY AND CONCLUSIONS

There can be several factors contributing for collapse, full details of lessons to be learnt is expected to come from the National Transport Safety Board. This paper focused on the design of nodes.

Complexities of geometry in a concrete truss bridge to meet a balance between architectural appearance and structural demand is recognized, particularly at the nodes. Assessment of capacities following the requirements of current design code can create robust design of node and meet the necessary structural performance. A node in concrete truss bridge can be successfully built in future projects.

Above discussions may not be new for majority of structural engineers, and the author believes most of them have confidence in concrete truss bridges for future projects. This event should not be a reason for negatively influencing industry to discard the merits in this type of bridge.

Relying heavily in computer software without understanding behavior can be a design risk for design offices. Design companies need to implement thorough review and checking process internally before releasing design documents.

11 ACKNOWLEDGEMENT

The author acknowledges the comments received from the technical reviewers and the infrastructure department of the Arcadis for supporting author for presenting this paper.

12 REFERENCES

- Ref-1 - Australian Broadcasting Corporation, Florida International University bridge collapse kills four, crushes cars: officials, Updated 16 Mar 2018, https://www.abc.net.au/news/2018-03-16/florida-international-university-bridge-collapse-kills-four/9554308
- Reg-2 - Sydney Morning Herald, Multiple dead as pedestrian bridge collapses in Miami, Florida, 16 March 2018, https://www.smh.com.au/world/north-america/multiple-dead-as-pedestrian-bridge-collapses-in-miami-florida-20180316-p4z4m5.html
- Ref-3 - Sydney Morning Herald, After Florida bridge collapse, time-saving construction method probed, 17 March 2018, https://www.smh.com.au/world/north-america/after-florida-bridge-collapse-time-saving-construction-method-probed-20180317-p4z4u7.html
- Ref-4 - National Transport Safety Board, NTSB Issues 2nd Investigative Update in FIU Bridge Collapse Investigation, 15 November 2018
- Ref-5 - Florida International University, University Prosperity Project, http://facilities.fiu.edu/projects/BT_904/MCM_FIGG_Proposal_for_FIU_Pedestrian_Bridge_9-30-2015.pdf
- Ref-6 - Standards Australia, Australian Bridge Design Code AS5100 – 2017
- Ref-7 - H. P. Pokharel, 2017, Compressive Stress in Segmental Concrete Bridges and Impact of Adopting High Strength Grade Concrete in New Australian Bridge Design Code AS5100.5, Austroads Bridge Conference 2017, Melbourne Australia

13 AUTHOR BIOGRAPHIES

Hari Pokharel holds a master's degree in structural engineering and has more than 30 years of industry experience in design, construction and design management of major infrastructure projects in Australia and Asia, mostly related to bridges and heavy structures. He is a chartered professional engineer and member of the Engineers Australia and member of the American Society of Civil Engineers. Hari is currently working as an Associate Technical Director in the Infrastructure Department of Arcadis Australia Pacific, Sydney office.

Disclaimer: The views, thoughts, and opinions expressed in this paper are solely those of the author in his private capacity and are in no way connected to, belong or represent the views, thoughts or opinions of the author's employer, Arcadis Australia Pacific Pty Limited or any other entity connected to the author's employer.