Remedial Action Schemes for Hands-On Relay School March 13, 2018

Daniel Goodrich

Bonneville Power Administration

Introduction

Daniel Goodrich

BSEE Arizona State University
25 years of SRP work experience (Planning, Protection, Design, Operations, Maintenance)

8 years in BPA Technical Operations, doing RAS Operation testing, and Disturbance Analysis

Registered Professional Engineer (Electrical) in Arizona


CRWNZONE
14
1

Purpose of Presentation

To answer the following questions

1. What is a RAS?
2. Why do we have RAS?
3. What Makes Up a RAS?
4. Where would we be without them?
5. Who has them?
6. WECC RASRS

A Caveat

“Look, it's not in my nature to be mysterious. But I can't talk about it and I can't talk about why.”

Rusty Ryan

Ocean’s Eleven (2001)

NERC Definition of RAS

A scheme designed to detect predetermined System conditions and automatically take corrective actions that may include, but are not limited to, **adjusting or tripping generation,** tripping **load**, or **reconfiguring** a System(s). RAS accomplish objectives such as:

- Meet requirements identified in the NERC Reliability Standards;
- Maintain Bulk Electric System **stability**;
- Maintain acceptable System **voltages**;
- Maintain acceptable power **flows**;
- Limit the impact of **Cascading** or extreme events

RAS--Problem→Remote or Multi-Site Solution

RAS Exclusions

a. Protection Systems installed for the purpose of detecting Faults on BES Elements and isolating the faulted Elements
b. Schemes for automatic underfrequency load shedding (UFLS) and automatic undervoltage load shedding (UVLS) comprised of only distributed relays
c. Out-of-step tripping and power swing blocking
d. Automatic reclosing schemes
e. Schemes applied on an Element for non-Fault conditions, such as, but not limited to, generator loss-of-field, transformer top-oil temperature, overvoltage, or overload to protect the Element against damage by removing it from service

Exclusion a) Traditional Protection Schemes

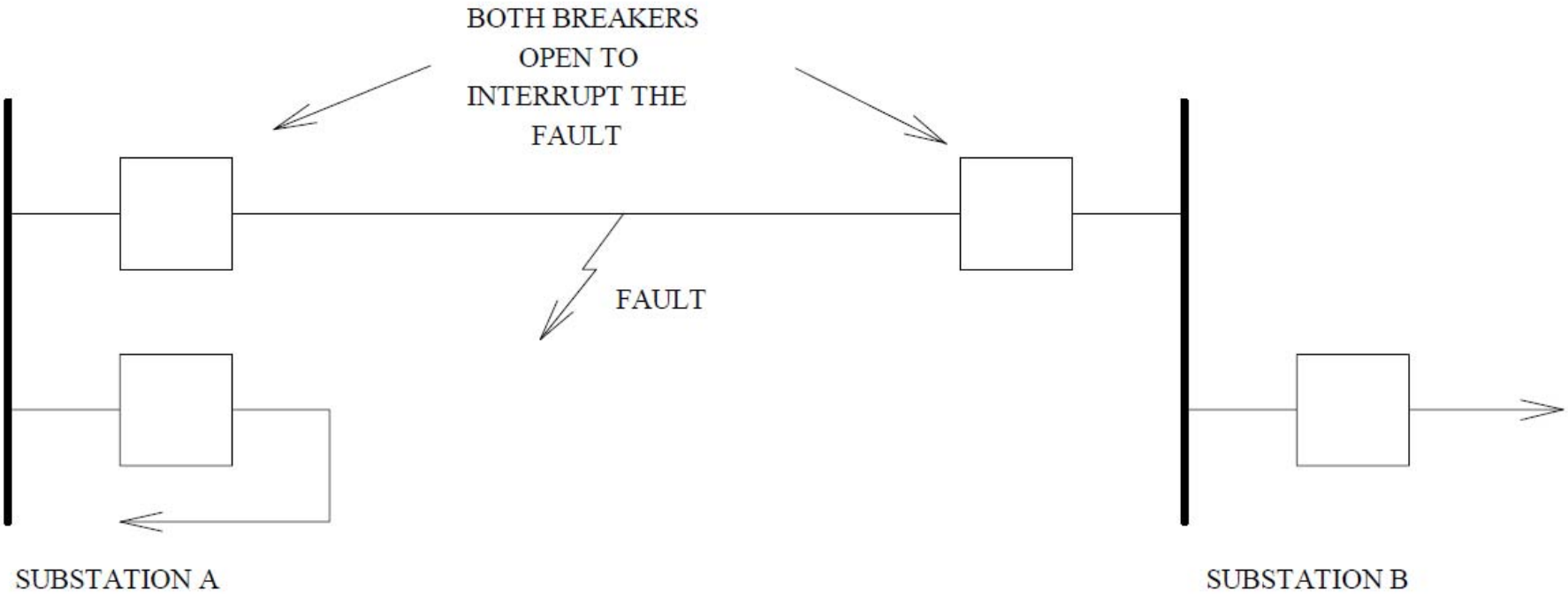

Protection Scheme: Local Problem→Local Solution

Exclusion b) UFLS

Document name	**WECC Off-Nominal Frequency Load Shedding Plan**
Category	( ) Regional Reliability Standard ( ) Regional Criteria (X) Policy ( ) Guideline ( ) Report or other ( ) Charter
Document date	May 24, 2011

1b. UFLS Entities participating in the Northwest Power Pool sub-area Coordinated Plan are required to shed their first block of load as soon as frequency has declined to 59.3 Hz, with additional minimum requirements for further load shedding steps as set forth in the following table:

Load Shedding Block	Percent of NWPP Sub-Area Load Dropped	Frequency Set-Point (Hz)	Tripping Time*
1	5.6	59.3	no more than 14 cycles
2	5.6	59.2	no more than 14 cycles
3	5.6	59.0	no more than 14 cycles
4	5.6	58.8	no more than 14 cycles
5	5.6	58.6	no more than 14 cycles
Additional automatic load shedding to correct underfrequency stalling			
	2.3	59.3	15 sec
	1.7	59.5	30 sec
	2.0	59.5	1 min
Load automatically restored from 59.3 Hz block to correct frequency overshoot			
	1.1	60.5	30 sec
	1.7	60.7	5 sec
	2.3	60.9	0.25 sec

RAS Exclusions

a. Protection Systems installed for the purpose of detecting Faults on BES Elements and isolating the faulted Elements
b. Schemes for automatic underfrequency load shedding (UFLS) and automatic undervoltage load shedding (UVLS) comprised of only distributed relays
c. Out-of-step tripping and power swing blocking
d. Automatic reclosing schemes
e. Schemes applied on an Element for non-Fault conditions, such as, but not limited to, generator loss-of-field, transformer top-oil temperature, overvoltage, or overload to protect the Element against damage by removing it from service

RAS Exclusions

f. Controllers that switch or regulate one or more of the following: series or shunt reactive devices, flexible alternating current transmission system (FACTS) devices, phase-shifting transformers, variable-frequency transformers, or tap-changing transformers; and, that are located at and monitor quantities solely at the same station as the Element being switched or regulated

g. FACTS controllers that remotely switch static shunt reactive devices located at other stations to regulate the output of a single FACTS device

h. Schemes or controllers that remotely switch shunt reactors and shunt capacitors for voltage regulation that would otherwise be manually switched

i. Schemes that automatically de-energize a line for a non-Fault operation when one end of the line is open

j. Schemes that provide anti-islanding protection (e.g., protect load from effects of being isolated with generation that may not be capable of maintaining acceptable frequency and voltage)

Exclusions f) and g) FACTS

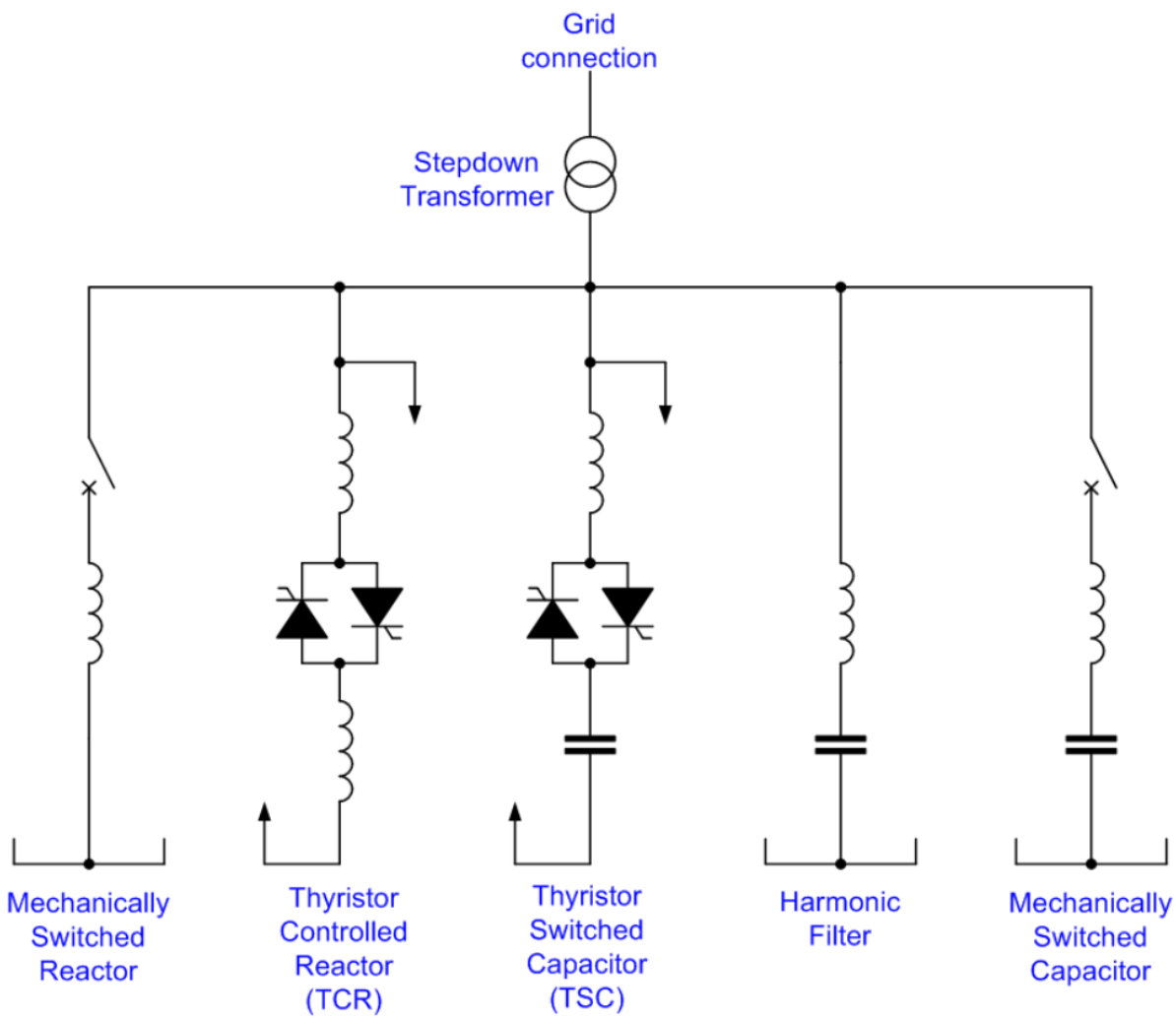

Exclusion j) Anti-Islanding Schemes

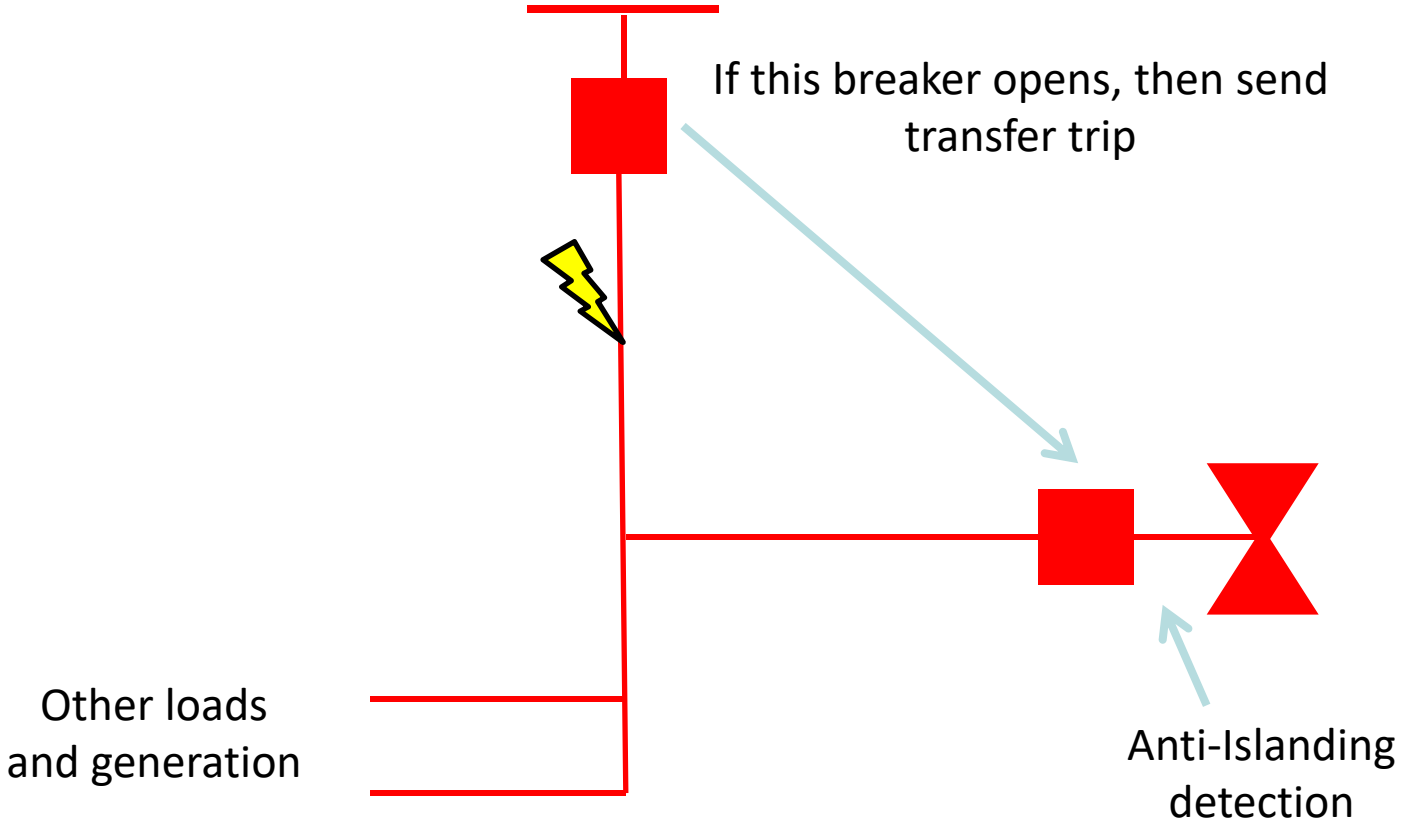

RAS--Problem→Remote or Multi-Site Solution

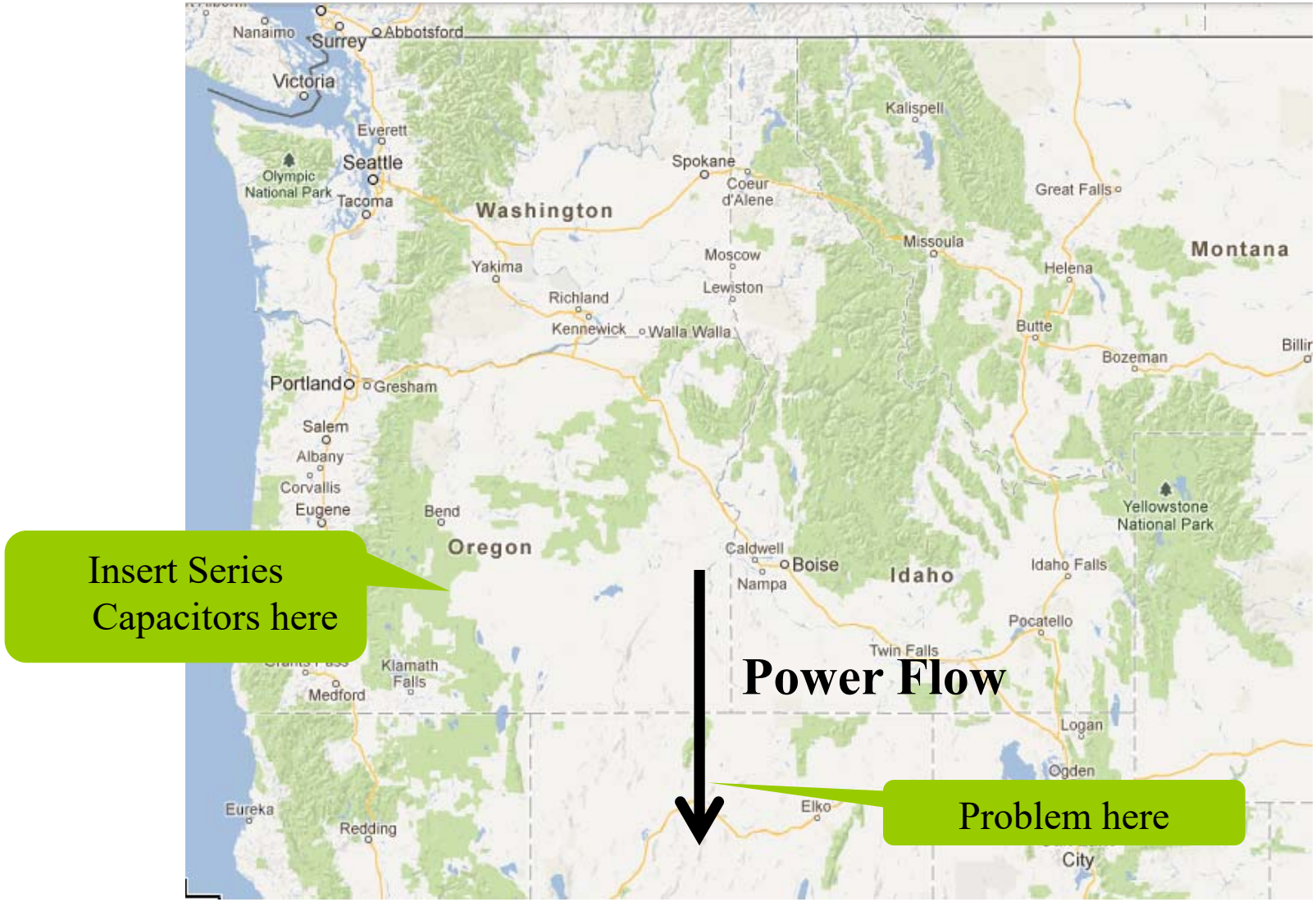

RAS Exclusions

k. Automatic sequences that proceed when manually initiated solely by a System Operator
l. Modulation of HVdc or FACTS via supplementary controls, such as angle damping or frequency damping applied to damp local or inter-area oscillations
m. Sub-synchronous resonance (SSR) protection schemes that directly detect sub-synchronous quantities (e.g., currents or torsional oscillations)
n. Generator controls such as, but not limited to, automatic generation control (AGC), generation excitation [e.g. automatic voltage regulation (AVR) and power system stabilizers (PSS)], fast valving, and speed governing

Damping Controller

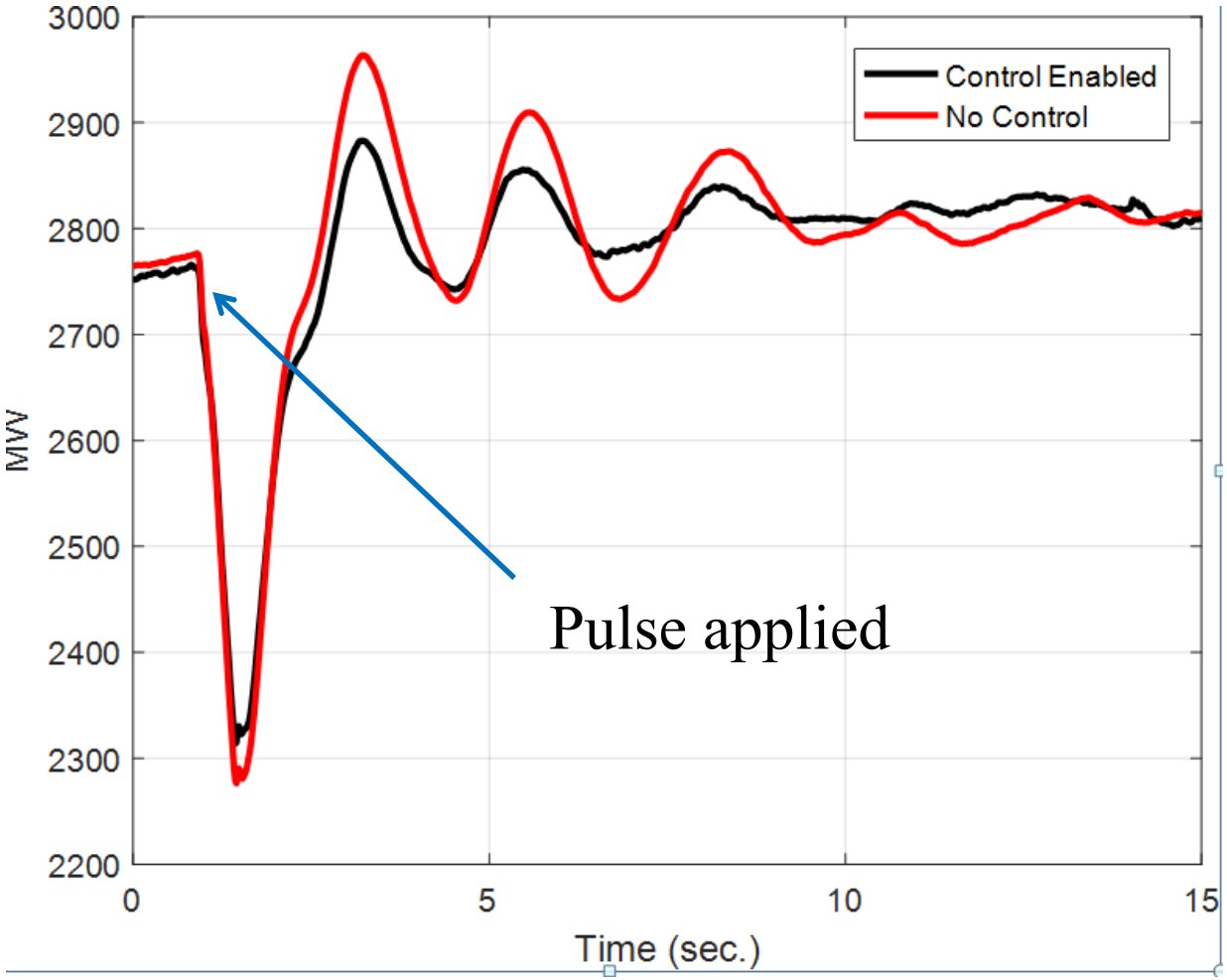

Subsynchronous Resonance

Mohave SSR Incident (1970)

An example of SSR Torsional Interaction

- Mohave generator: 1,580 MW coal-fired in NV.
- Gradually growing vibration that eventually fractured a shaft section.
- First investigations incorrectly determined cause. After 2nd failure in 1971 cause was identified as Subsynchronous Resonance.
- An electrical resonance at 30.5 Hz excited a mechanical resonance at 30.1 Hz.
- Problem was cured by reducing compensation percentage and installing a torsional relay.

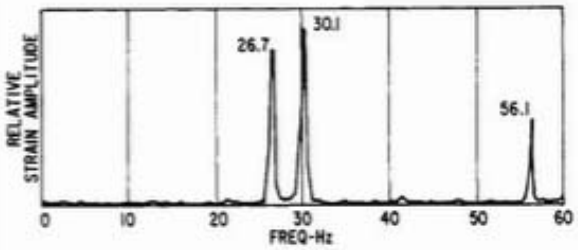

Fig. 7. Synchronization Frequency Analysis

RAS--Problem→Remote or Multi-Site Solution

Case 1: Simple RAS: Single Line – Single Generator

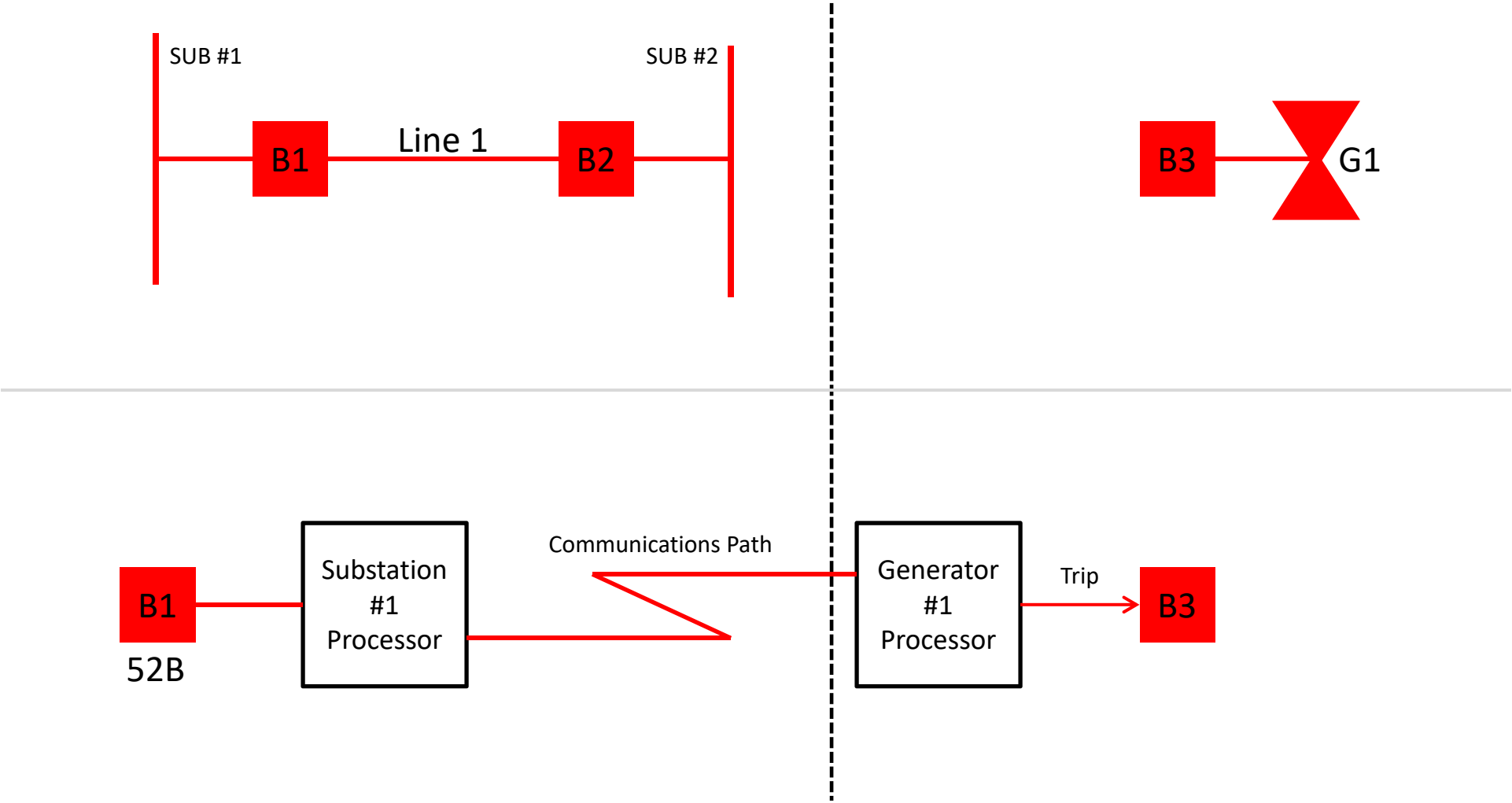

RAS

- **Remedial**: Supplying a remedy
  - Keep the system stable, even when disturbances occur
- **Action**: Trips generators; inserts capacitors
- **Scheme**: Relays, wires, breakers

Name that film!

Categorizing RAS

1. **WECC RAS Reliability Subcommittee (RASRS):**
   A. Wide Area Protection Scheme (WAPS)
   B. Local Area Protection Scheme (LAPS)
   C. Safety Net
2. **By Detection Method:**
   1. Event Based
   2. Response Based (some call it Parameter Based)
3. **By arming method:** Automatic or manual

Categorizing RAS

- **WAPS:**
  - A RAS whose failure to operate would result in:
    - Violations of TPL-001-WECC-CRT-3 (Planning Criteria for System Performance), or
    - Load loss ≥ 300 MW, or
    - Generation Loss ≥ 1000 MW
- **LAPS:**
  - A RAS whose failure to operate would **not** result in the above
- **Safety Net:**
  - Extreme events

WAPS vs LAPS

- **What it means to System Protection:**
  - Test interval
    - 2 years for WAPS
    - 6 years for LAPS
    - No requirement for Safety Net(?)
  - Verify who is responsible for testing RAS at your utility

WECC RAS Classifications (2)

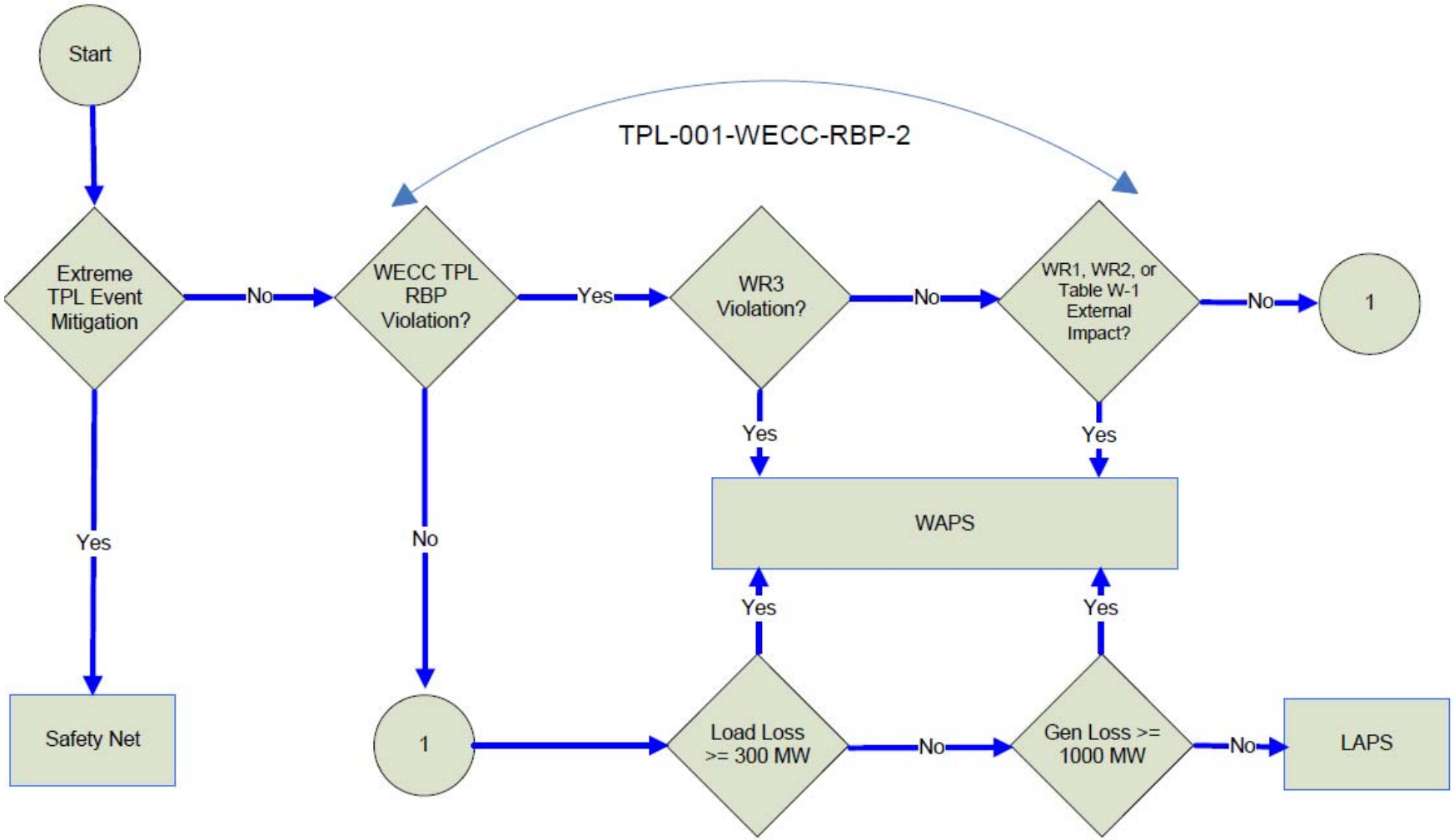

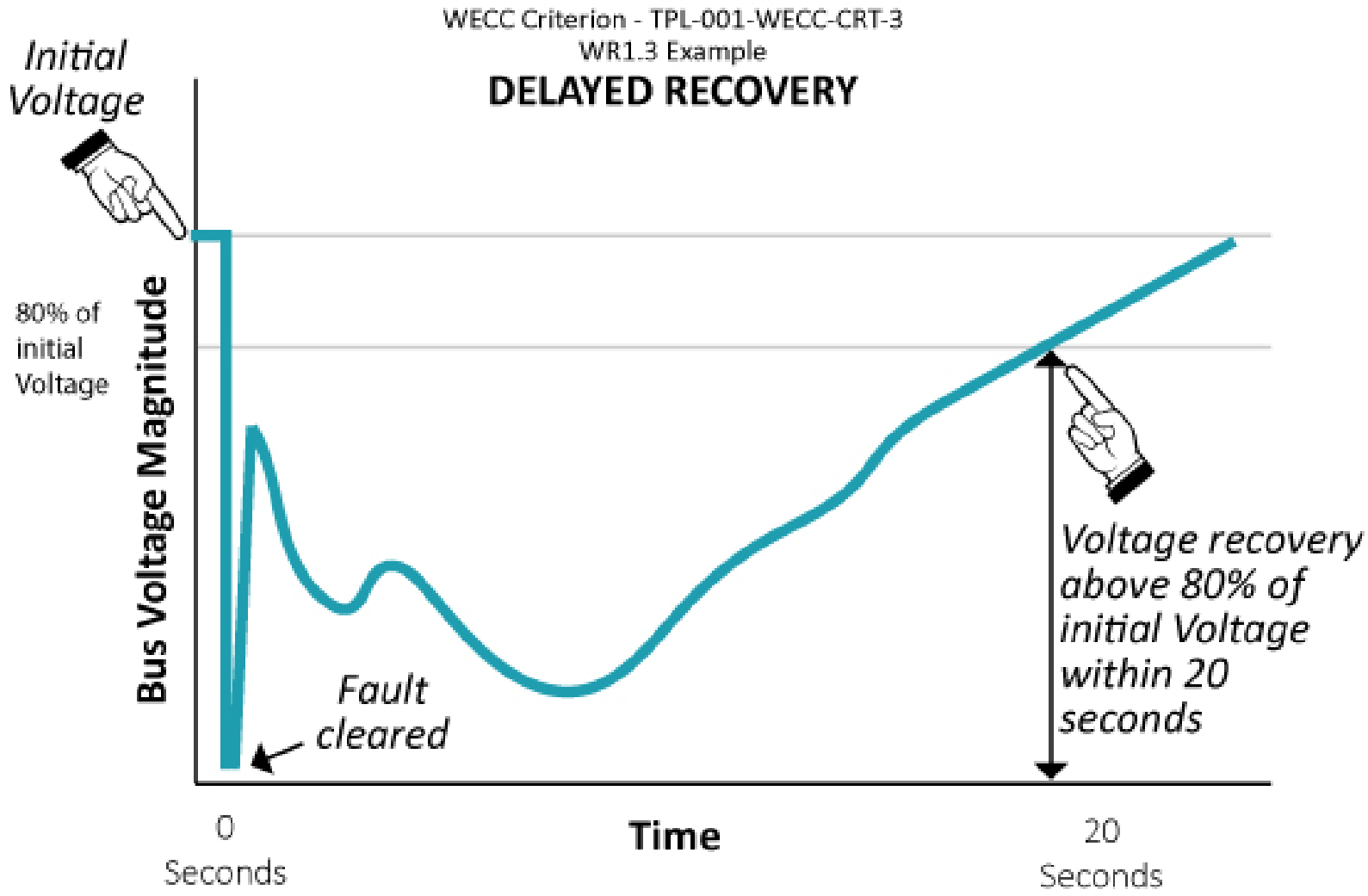
WECC Criterion - TPL-001-WECC-CRT-3
WR1.3 Example
DELAYED RECOVERY
Initial Voltage
80% of initial Voltage
Bus Voltage Magnitude
Fault cleared
Voltage recovery above 80% of initial Voltage within 20 seconds
0 Seconds
Time
20 Seconds

Categorizing RAS

1. **WECC RAS Reliability Subcommittee (RASRS):**
   A. Wide Area Protection Scheme (WAPS)
   B. Local Area Protection Scheme (LAPS)
2. **By Detection Method:**
   1. Event Based
   2. Response Based (some call it Parameter Based)
3. **By arming method:** Automatic or manual

Event Based RAS

Event-based schemes directly detect outages and/or fault events and initiate actions such as generator/load tripping to fully or partially mitigate the event impact.

Is basically digital, not analog.

Event Based RAS

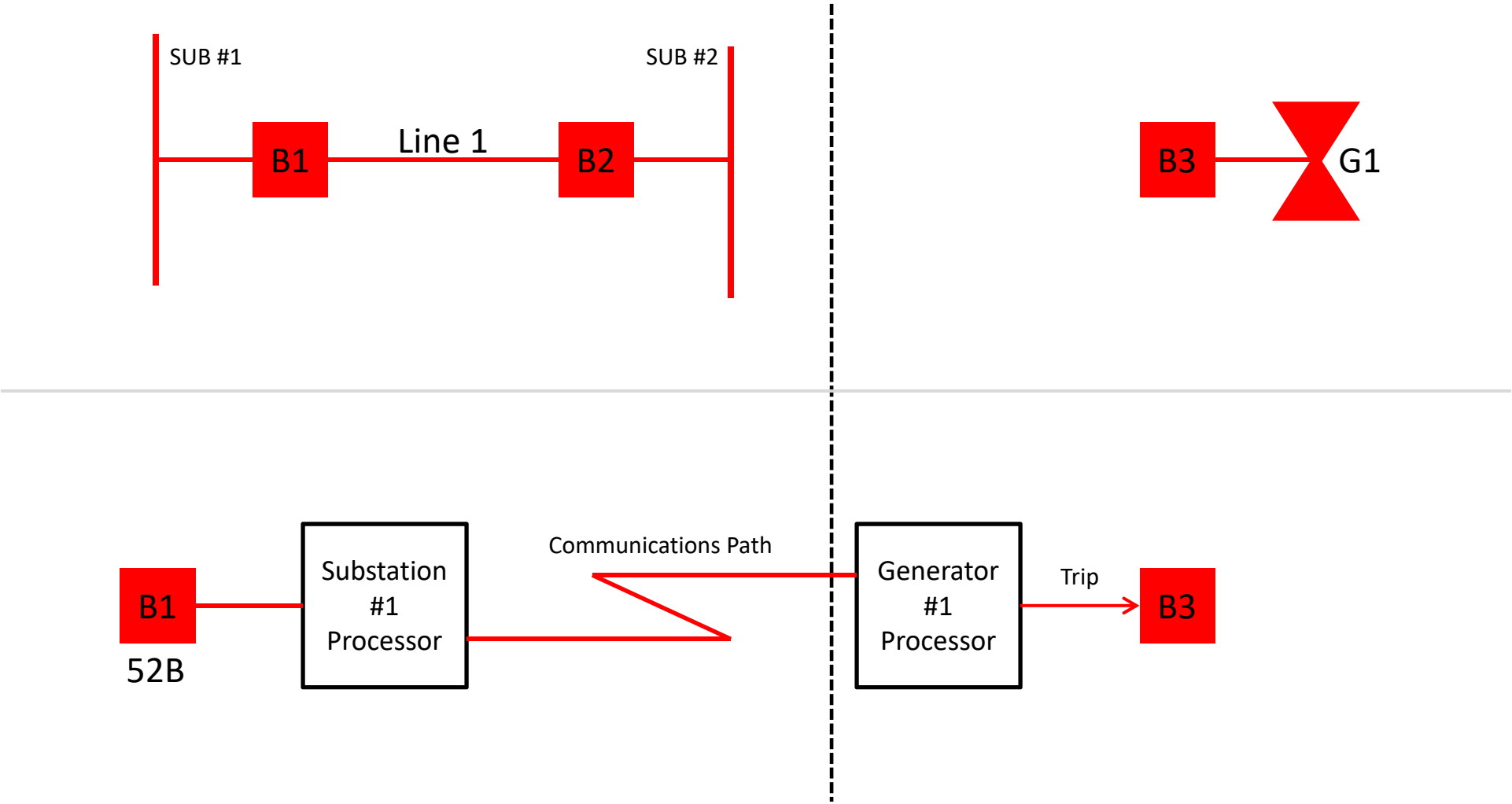

CASE 2: Event-Based RAS which is armed based on MW Flow

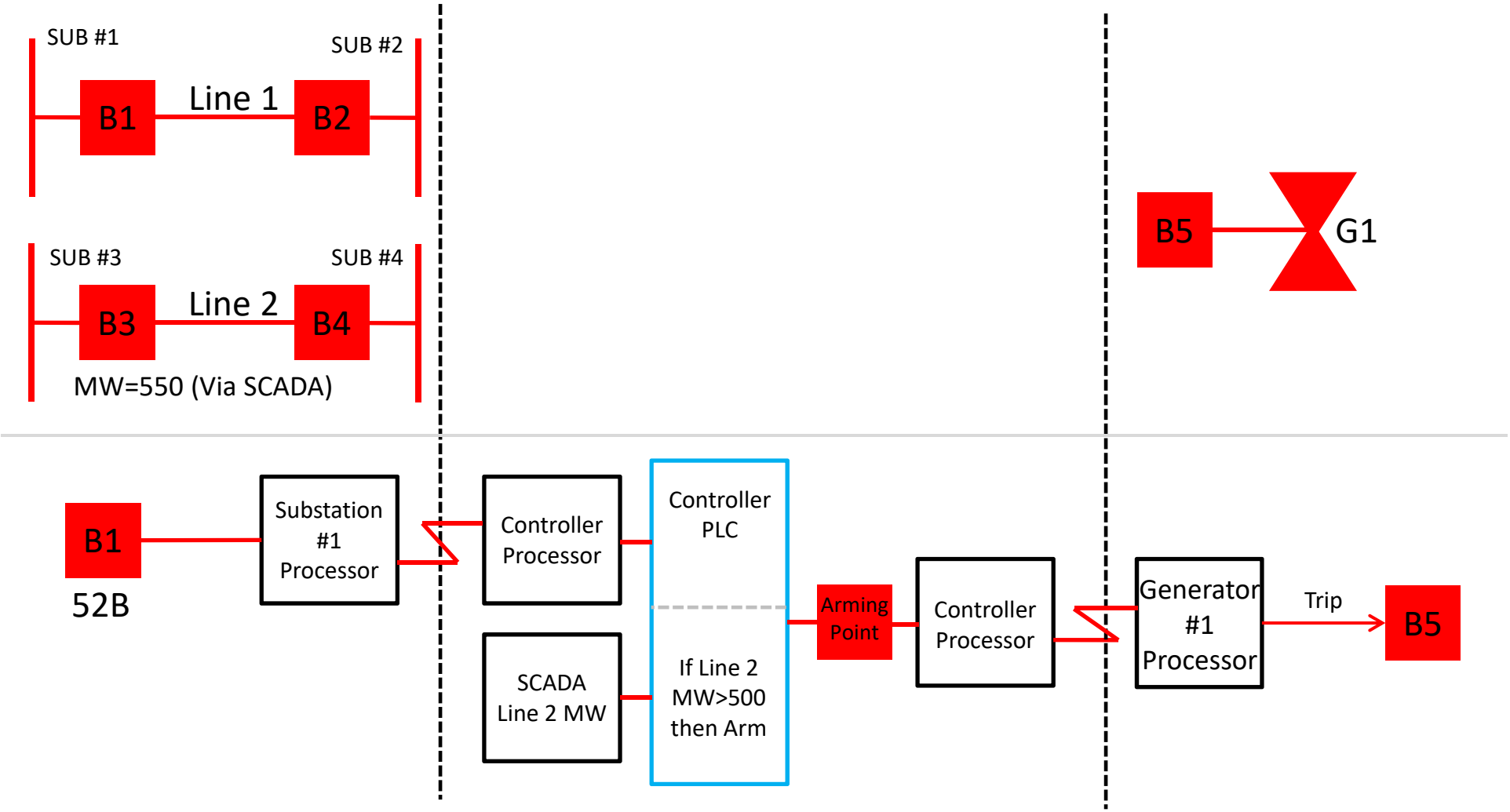

Response Based RAS

Response-based schemes monitor system response during disturbances and incorporate a closed-loop process to react to actual system conditions.

It often monitors analog quantities.

Response Based RAS

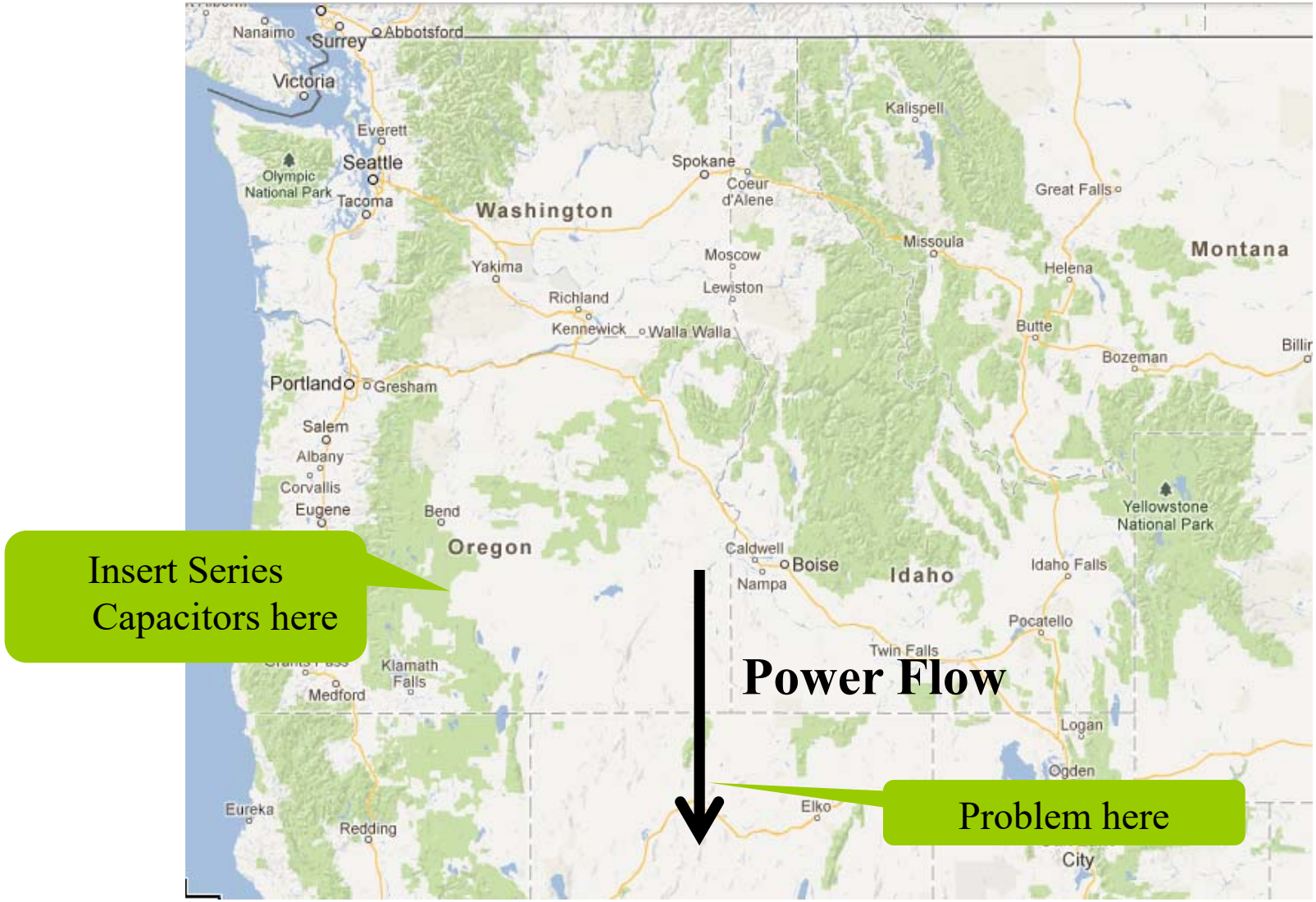

Designing a RAS

- Redundant design: “A” and “B”
- Redundant and diverse communication channels
- Cyber-secure (no network connections)
- Equipment monitored 24/7 (alarm when cut out, or equipment or communication circuit fails)
- Time tagging of events (SER)

Procedure to Submit a RAS for Assessment

Information Required to Assess the Reliability of a RAS Guideline

Revised: October 28, 2013

A. RAS PURPOSE AND OVERVIEW

1) Identify the ownership of the RAS (the Reporting Party).

2) Provide the name of the RAS, the purpose and the desired in-service date. Include the specific type of system problem(s) being solved, e.g. transient stability, thermal overload, voltage stability, etc.

3) Provide the owner's classification of the RAS as a LAPS, WAPS, or SN.

CASE #3: Multiple Lines – Multiple Generators

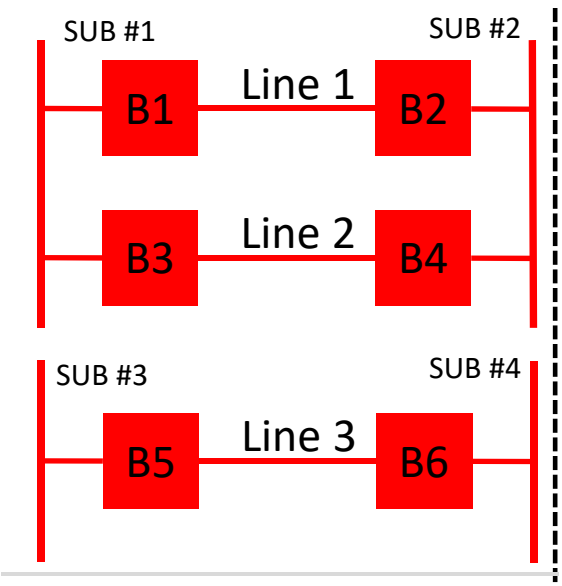

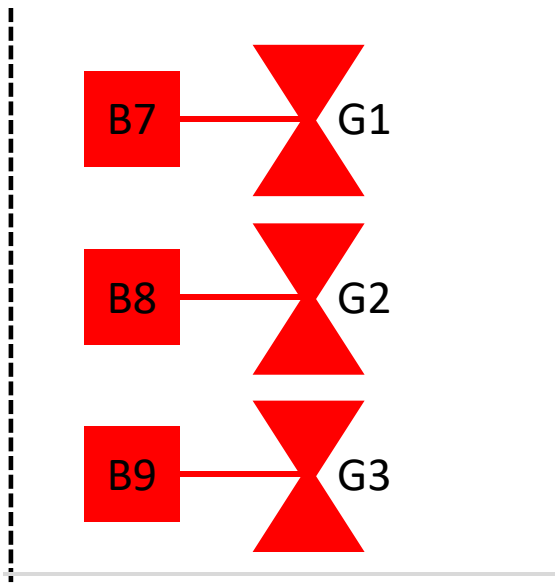

CASE #4: Speed up The RAS

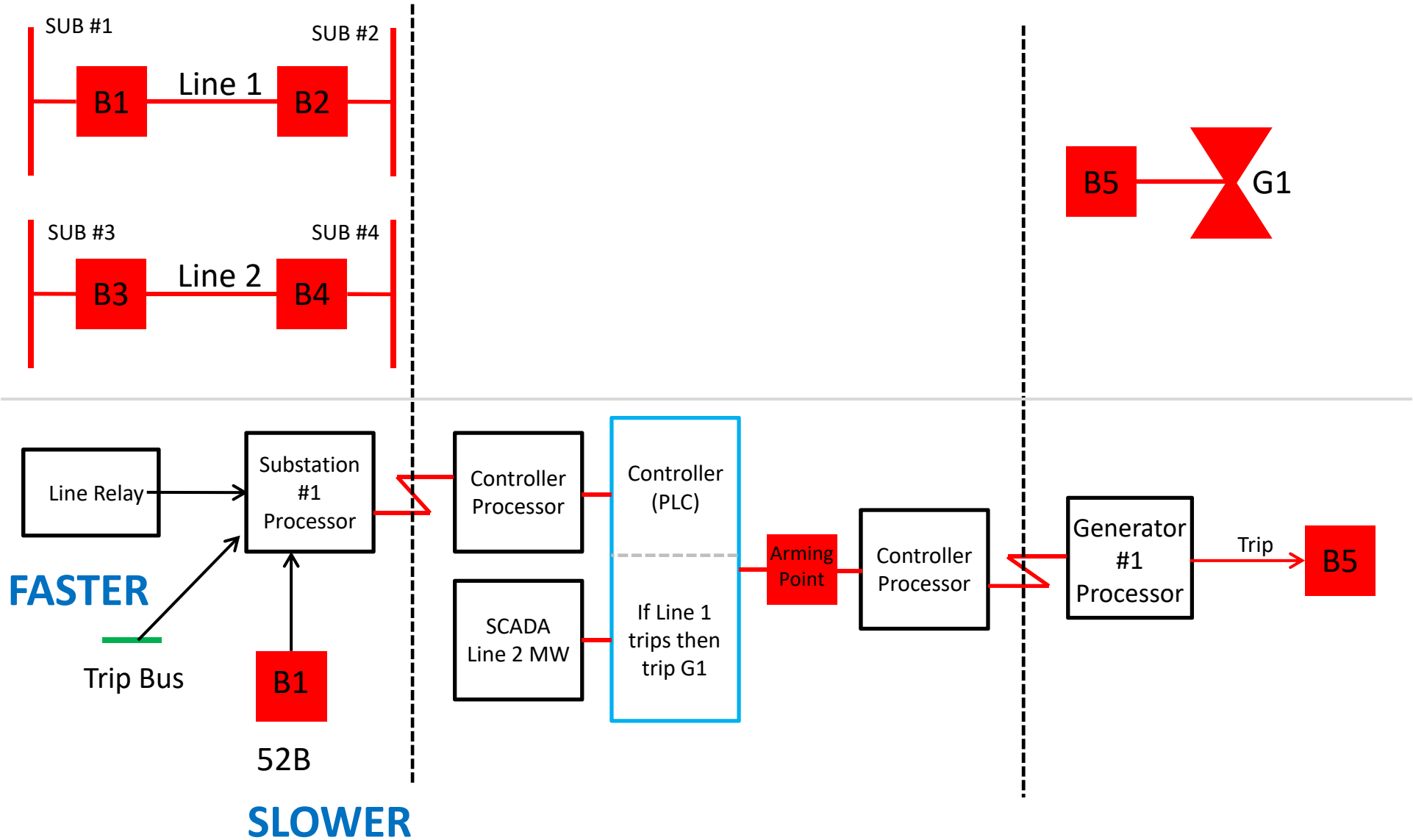

What film is this?

Why do we have RAS?

- To Increase Path Capacity ($) without putting more wire in the air.
- To Maximize the reliability and power transfer capability

Typical South of Allston Power Flows

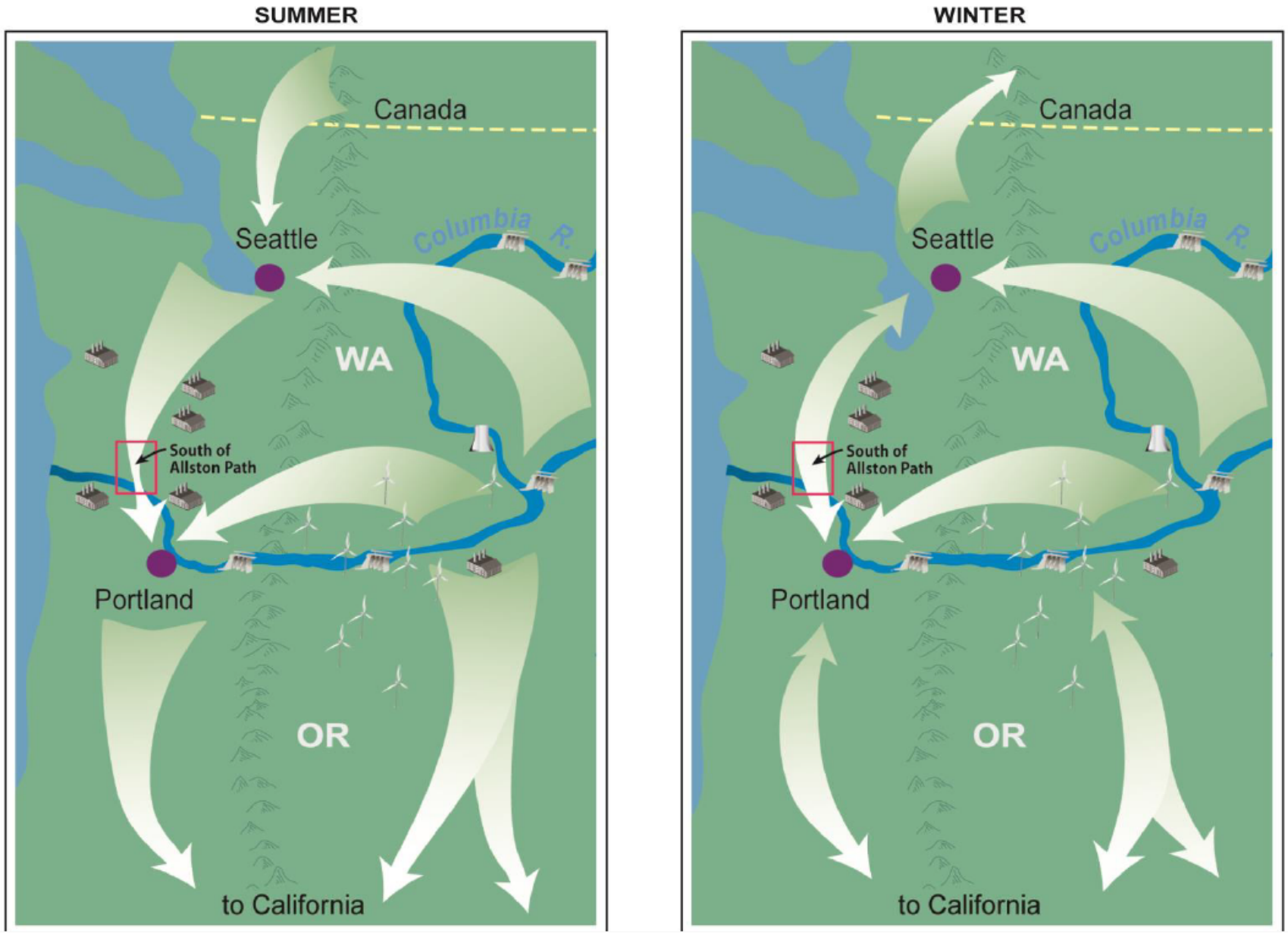

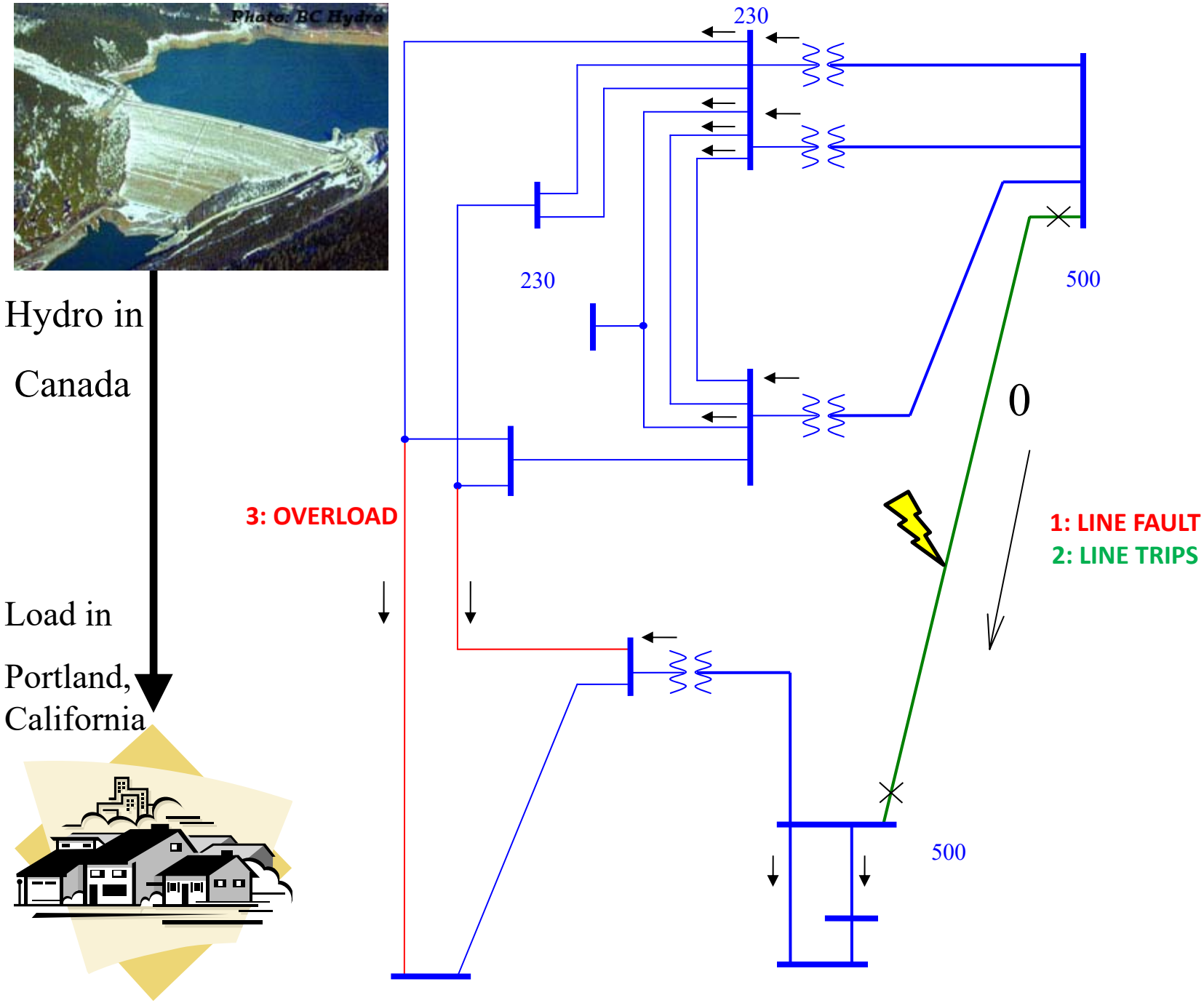
Photo: BC Hydro
Hydro in
Canada
Load in
Portland,
California
230
230
500
500
0
3: OVERLOAD
1: LINE FAULT
2: LINE TRIPS

Why We Need RAS
Is this path rated 1,200 MW?

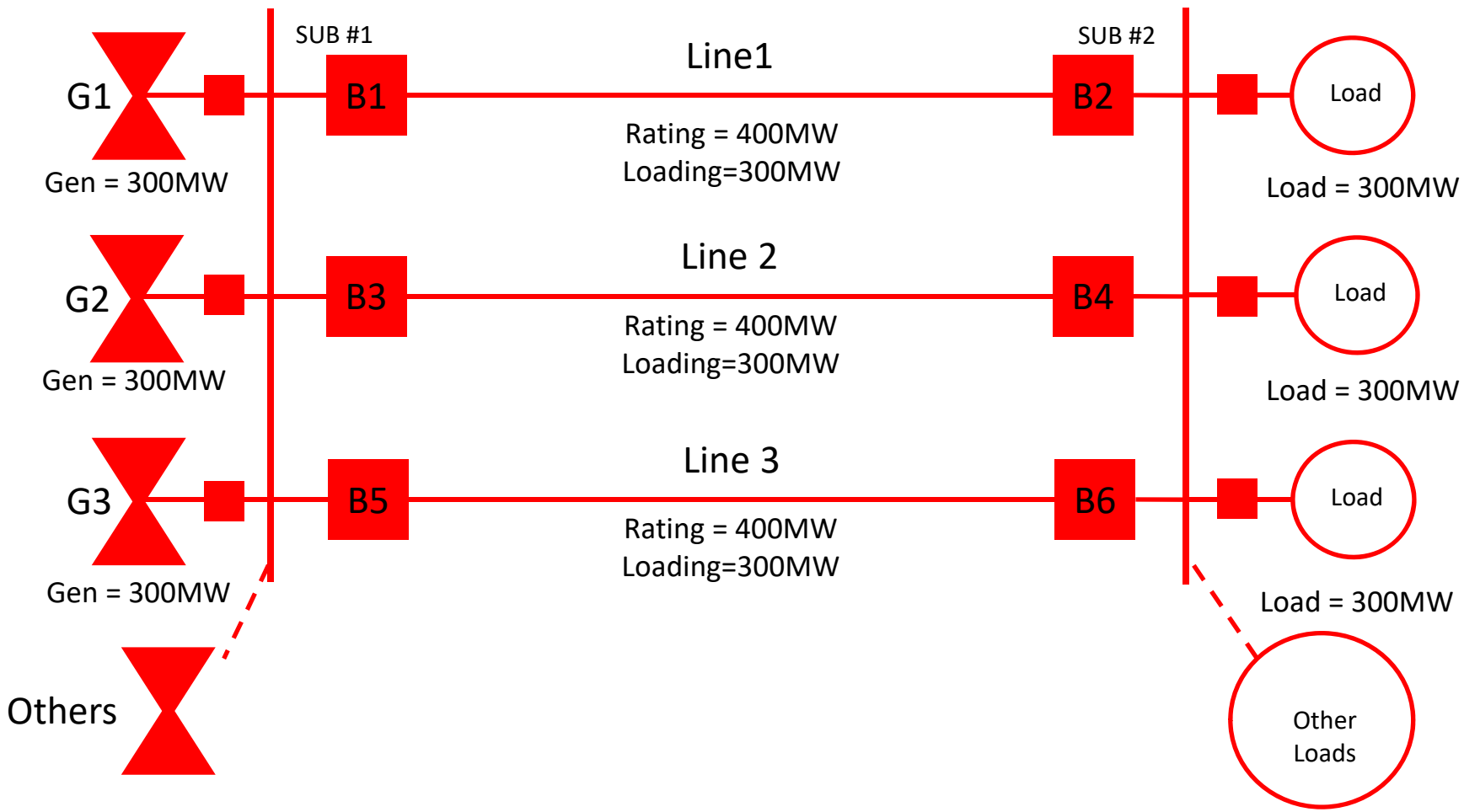

Why We Need RAS: Outage Condition

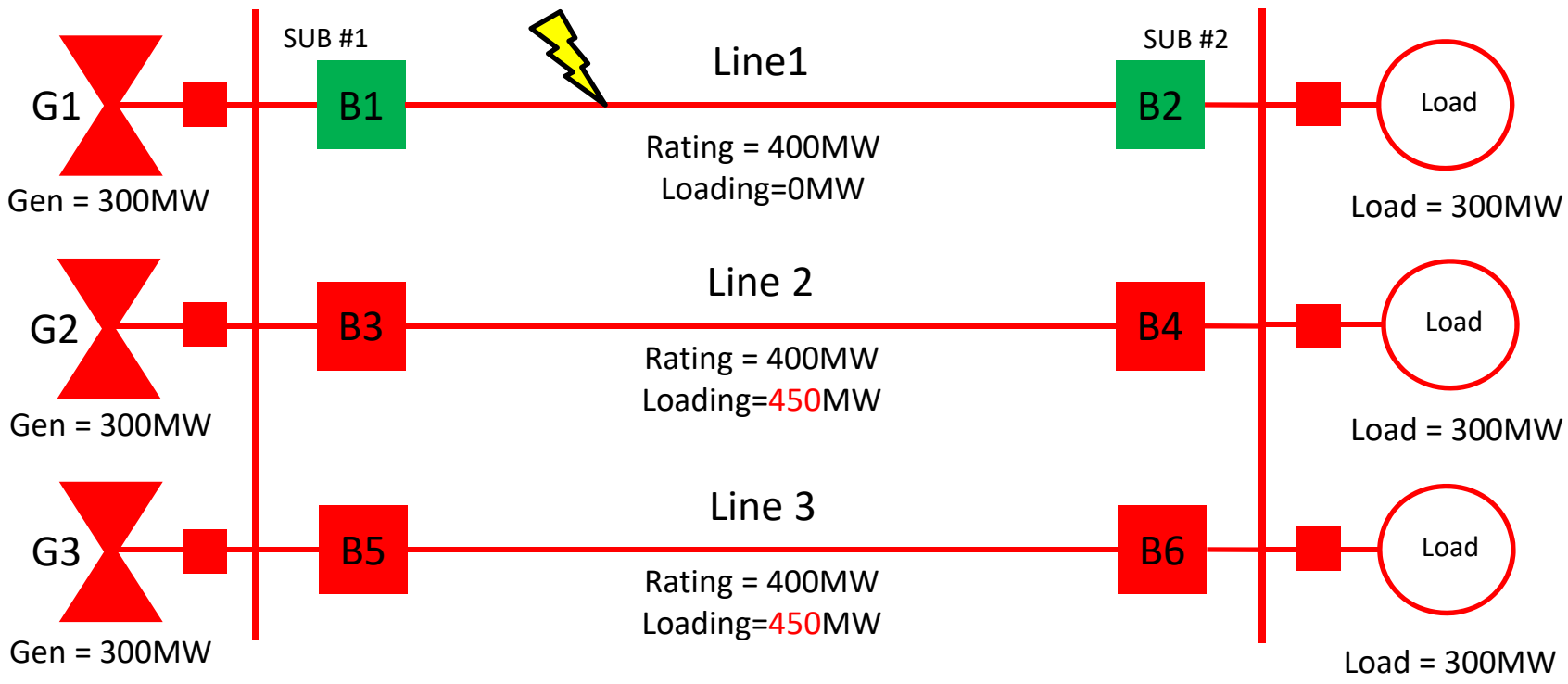

Why We Need RAS: No RAS corrective action

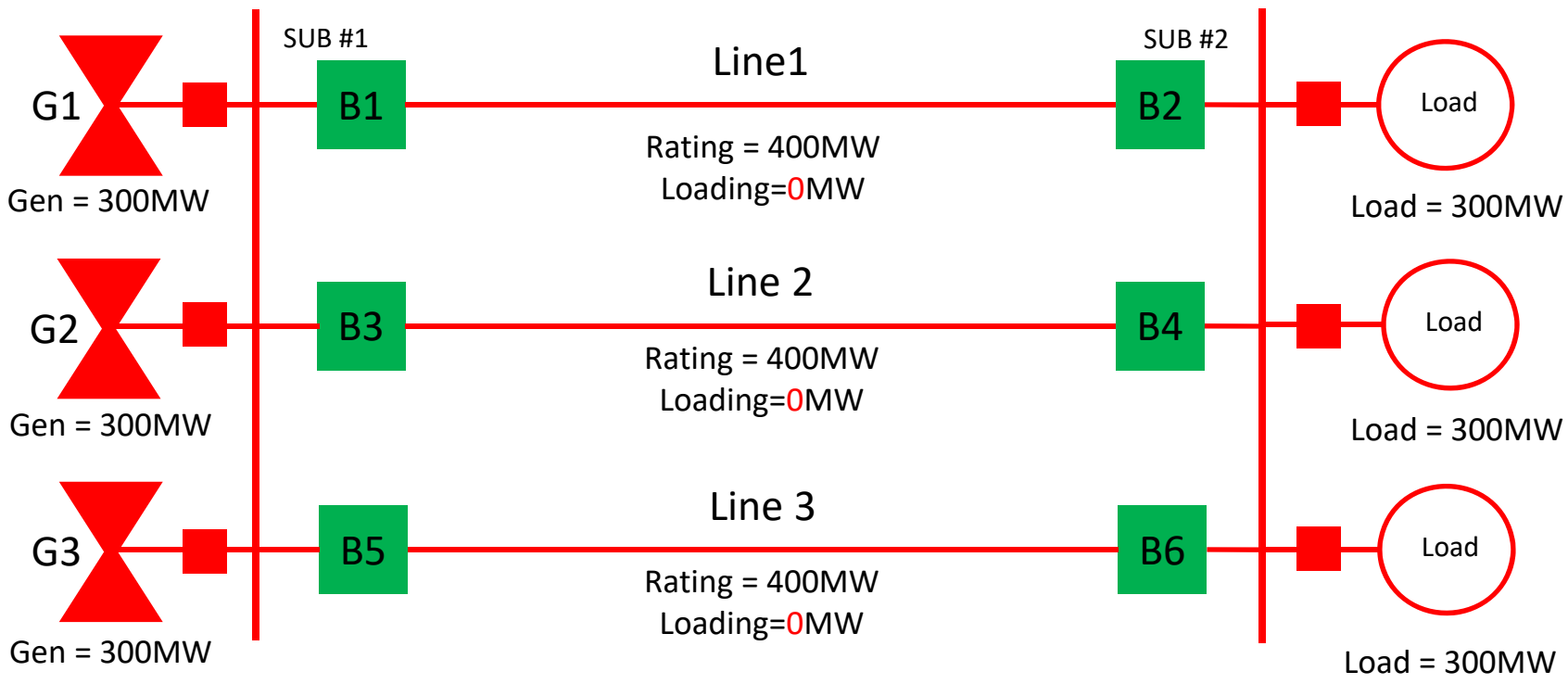

Generator or Load De-rate to anticipate outage

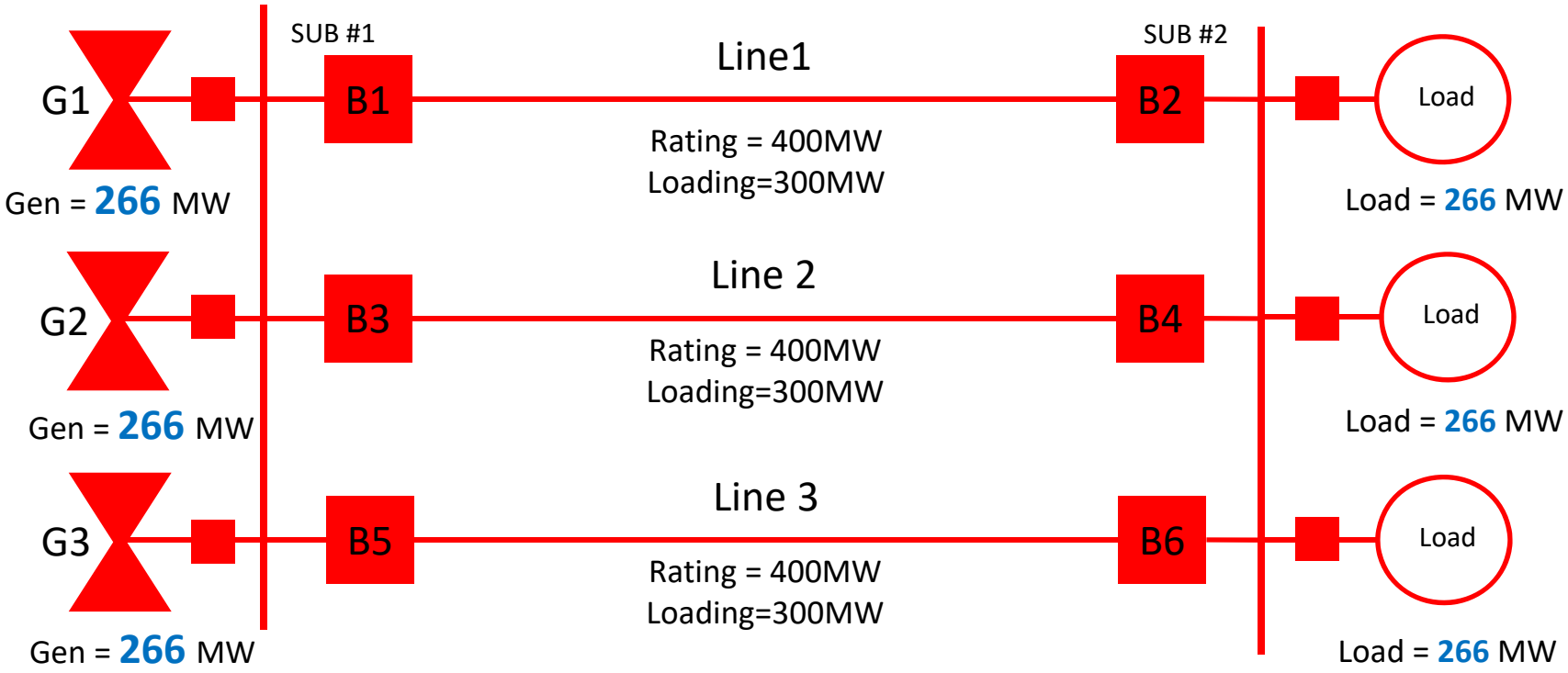

Why We Need RAS: Potential RAS Action #1 –Load & Gen Drop

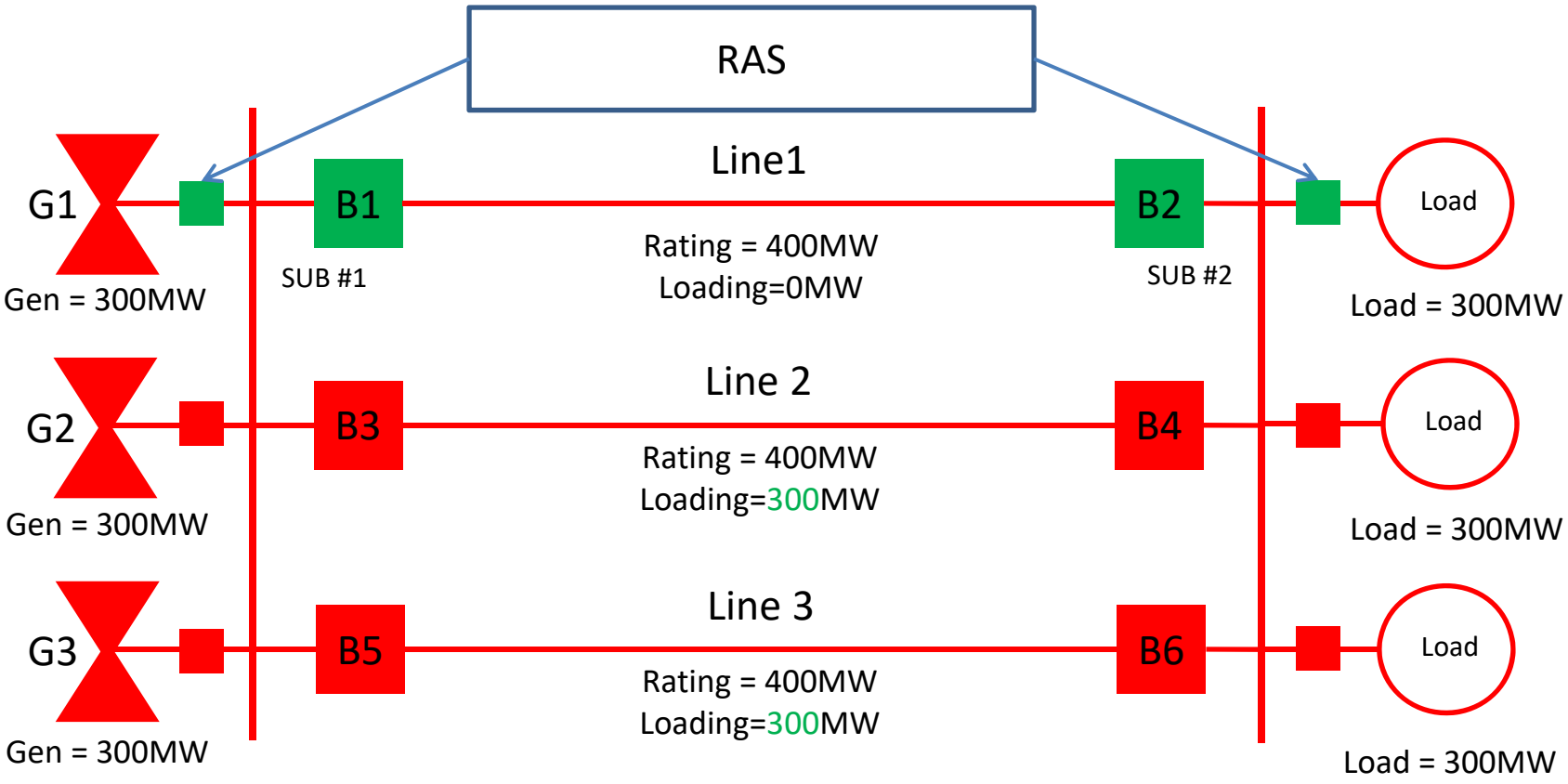

Why We Need RAS: Potential RAS Action #2 – Gen Runback

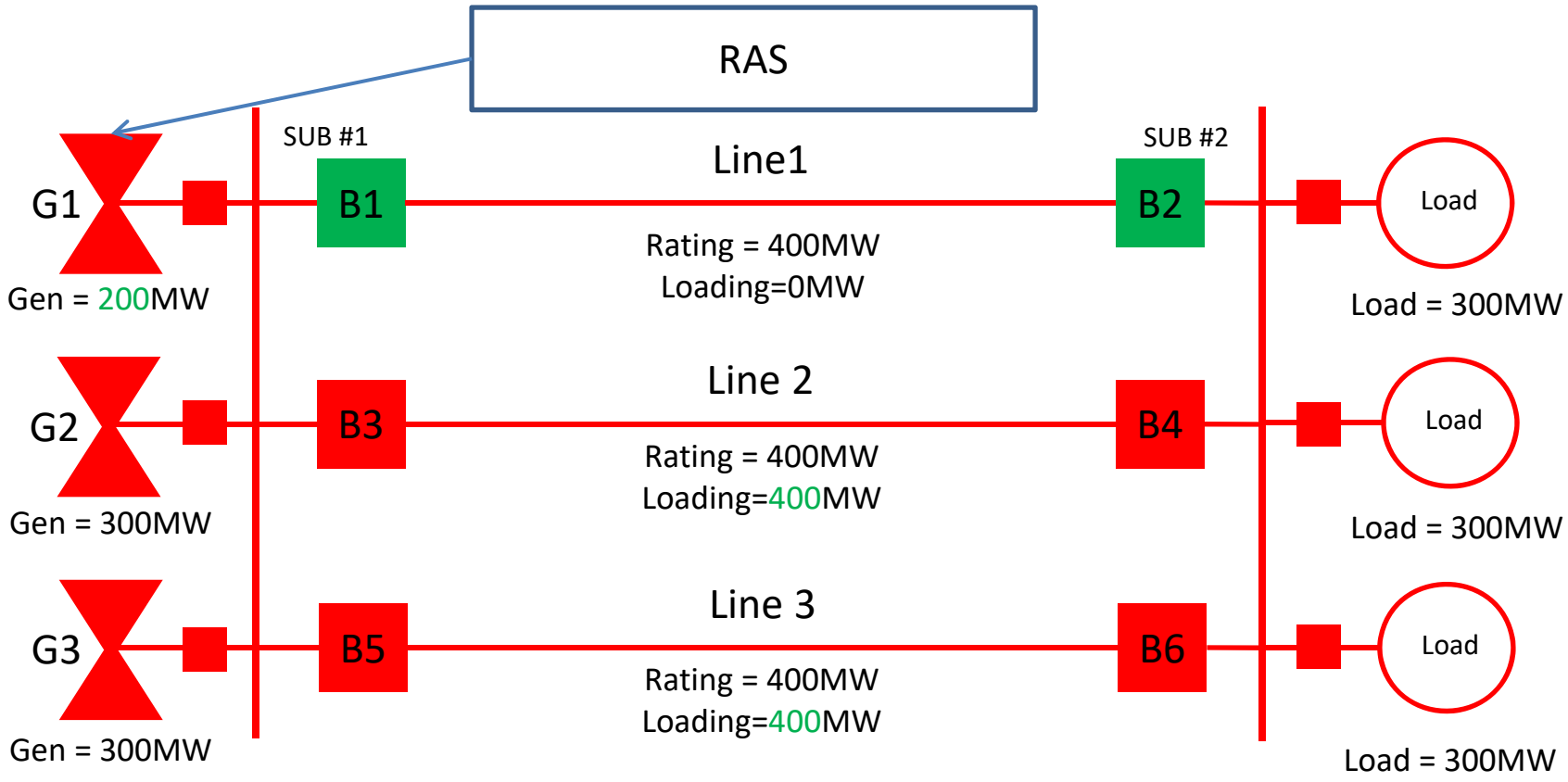

RAS: Where would we be without them?

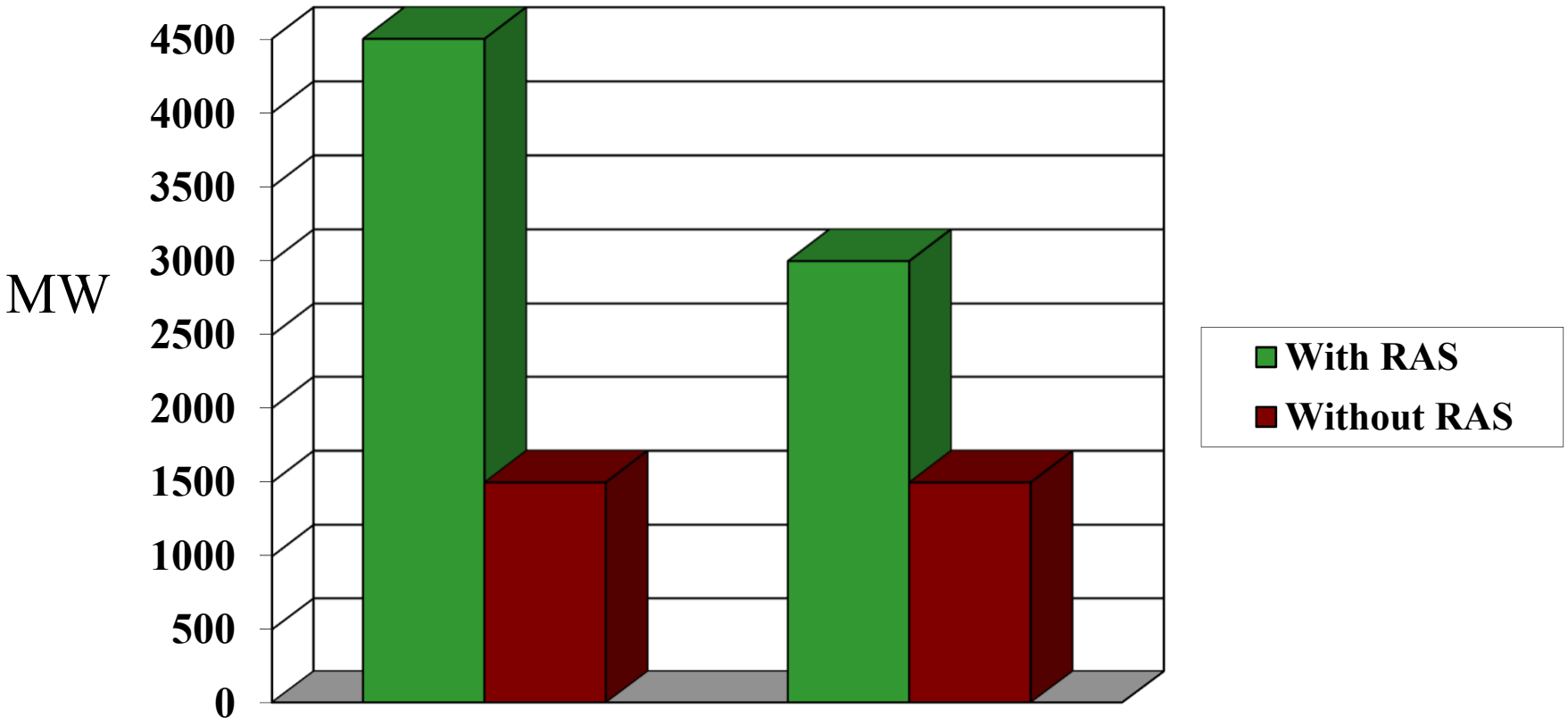

Why do we have RAS?

Remedial Action Schemes are designed to relieve three types of power system problems:

1. **Thermal overloads** (must mitigate in minutes)

2. **Voltage Stability** (seconds to minutes)

3. **Transient Stability** (cycles to seconds)

Thermal Limitation

- Usually caused by loss of parallel transmission.
- Not usually an instantaneous problem.
  - Transmission lines limited by continuous loading sag limit
  - Current flow may be above continuous rating instantaneously after the outage, but it takes time for heating of line to reach its sag limit

Transmission Sag Limit

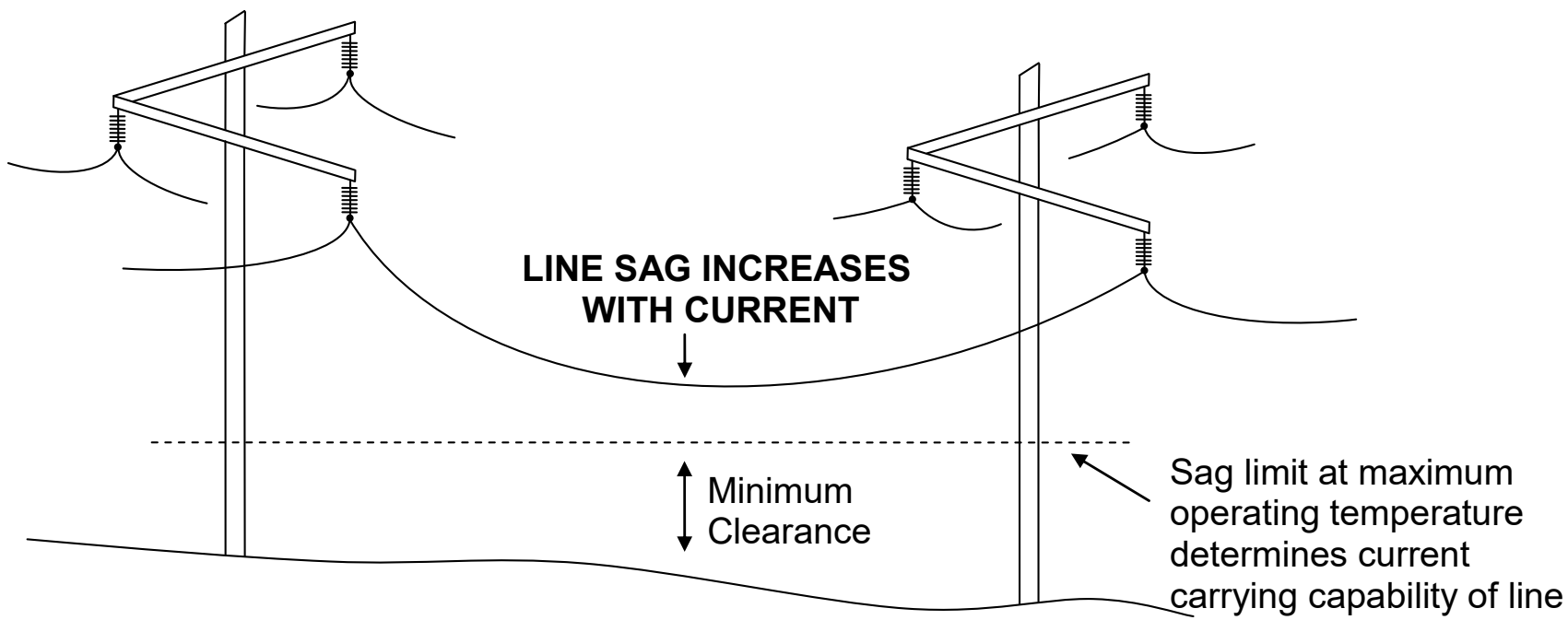

Thermal limits for Lines

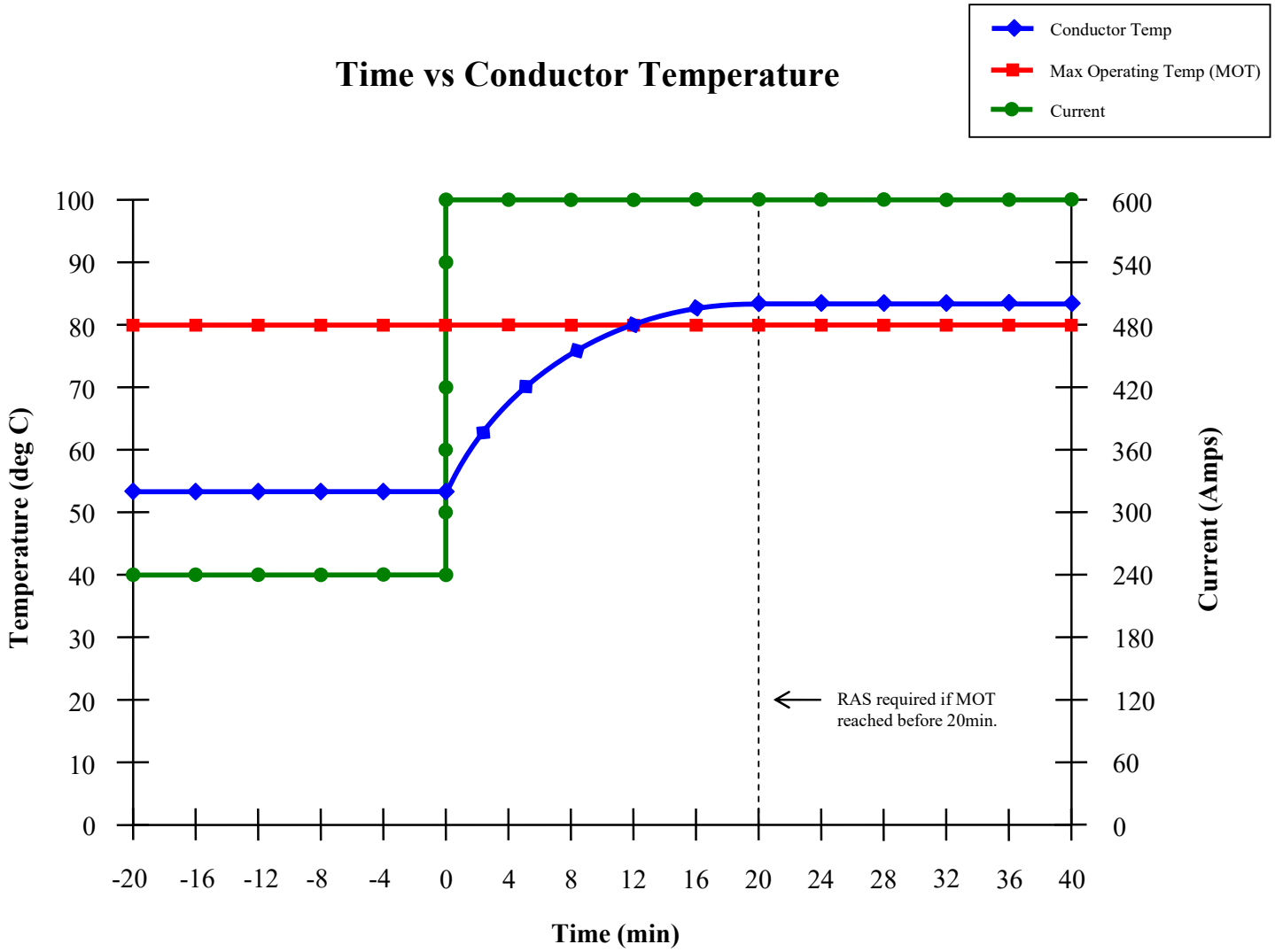

Thermal Limit

- If there is less than 20 (some new standards say 30) minutes for dispatcher response before the thermal sag limit is reached, operating limits are lowered or generator dropping (if effective and available) is used to automatically unload the limiting line.

What film?

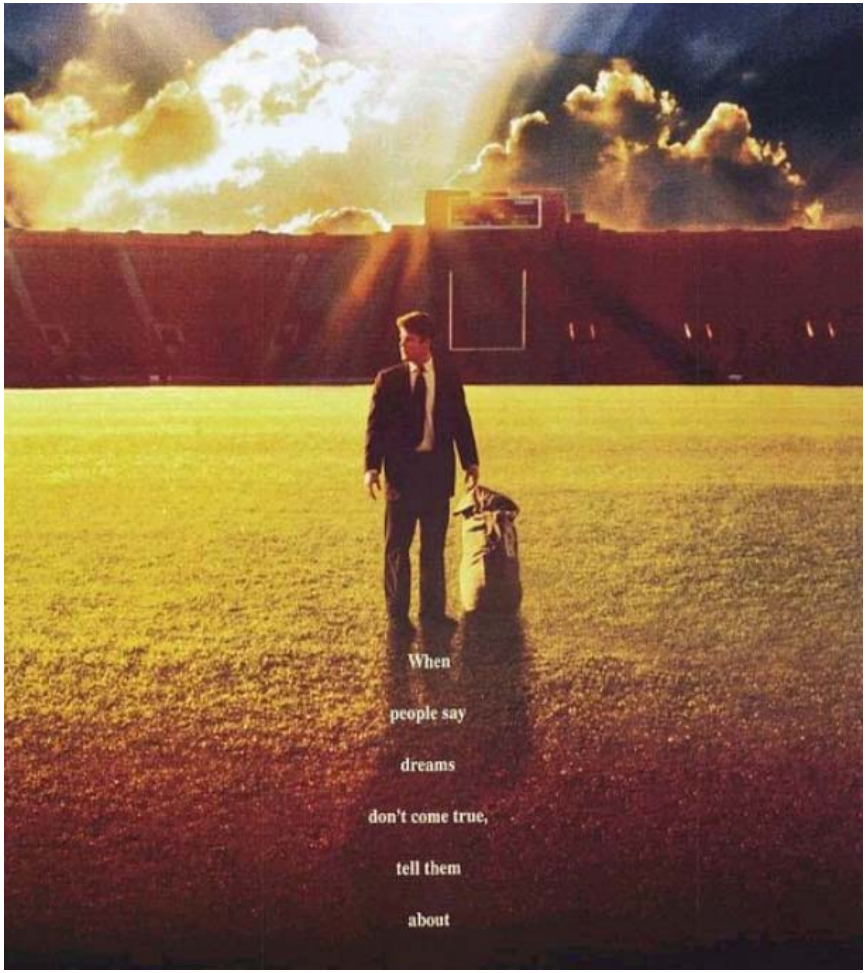

Voltage Stability Problem

- 500 kV transmission lines reach their surge impedance loading (SIL) long before thermal problems.
- SIL typically reached at 800-1400 MW loading for a 500 kV line (thermal capacity is typically 2100-4000 MW).
- When a 500 kV line is loaded above its SIL it acts like a reactor (pulls the voltage down) and put the system at risk of a voltage collapse if loading increases significantly.
- Switching reactive and dropping generation by RAS is used to maximize transfer capability

Fast or Slow Collapse?

- Winter
  - Load profile:
    - Prominent Resistive Heating Loads
    - More heat loads with motors coming online
    - Highest load peaks
  - Collapse:
    - Slow?
- Summer
  - Load profile:
    - Many AC units (motor loads)
    - Experiencing Higher peaks
  - Collapse:
    - Fast

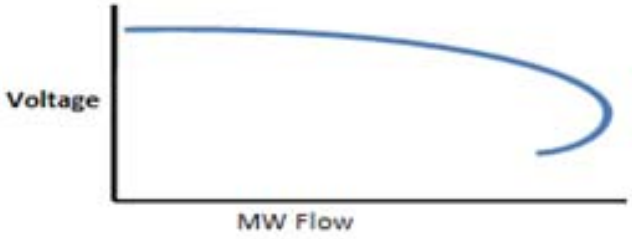

Outage Contingencies

Per Unit Voltage on a Bus

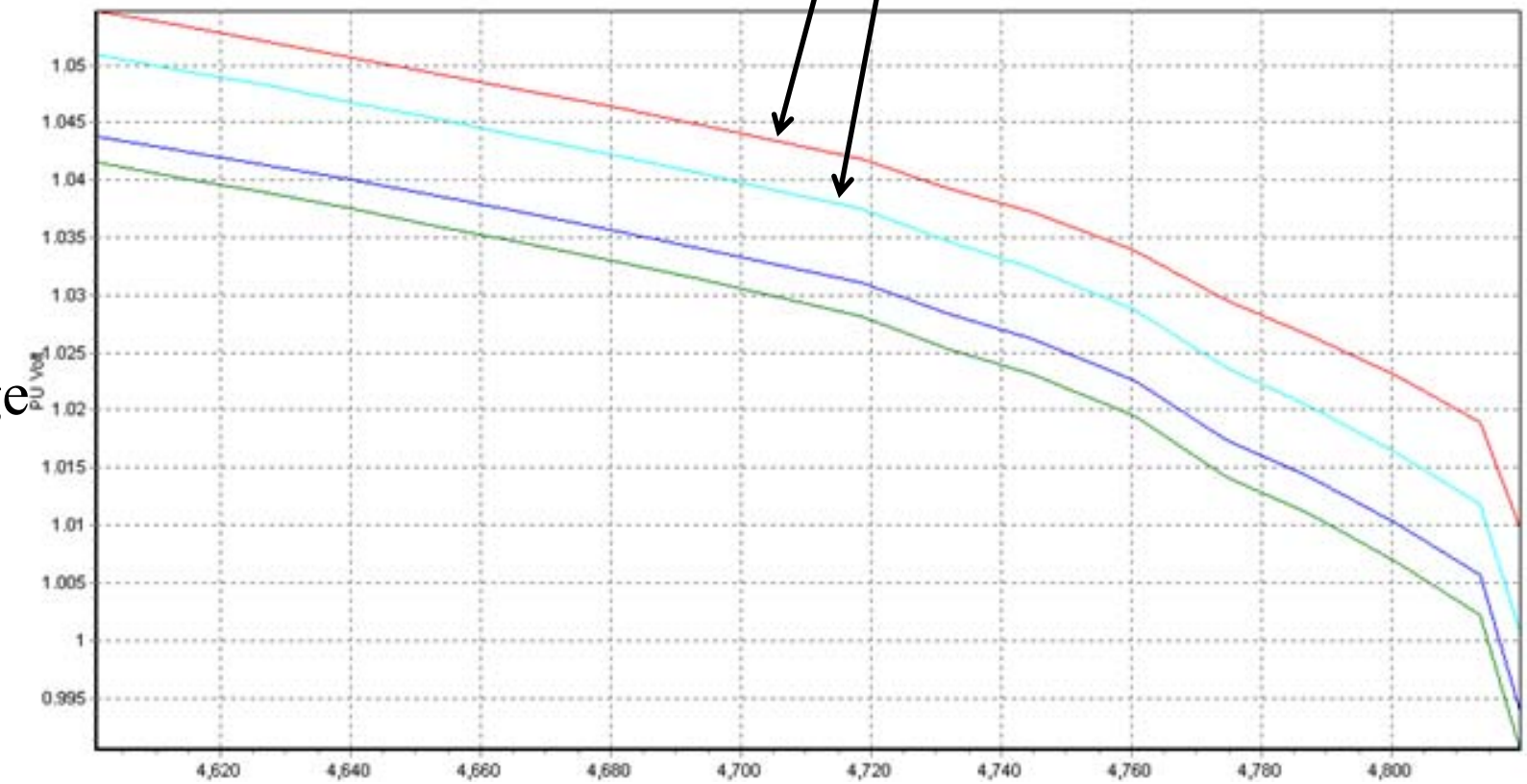

Megawatts on path

System Compensation effects on Voltage Stability

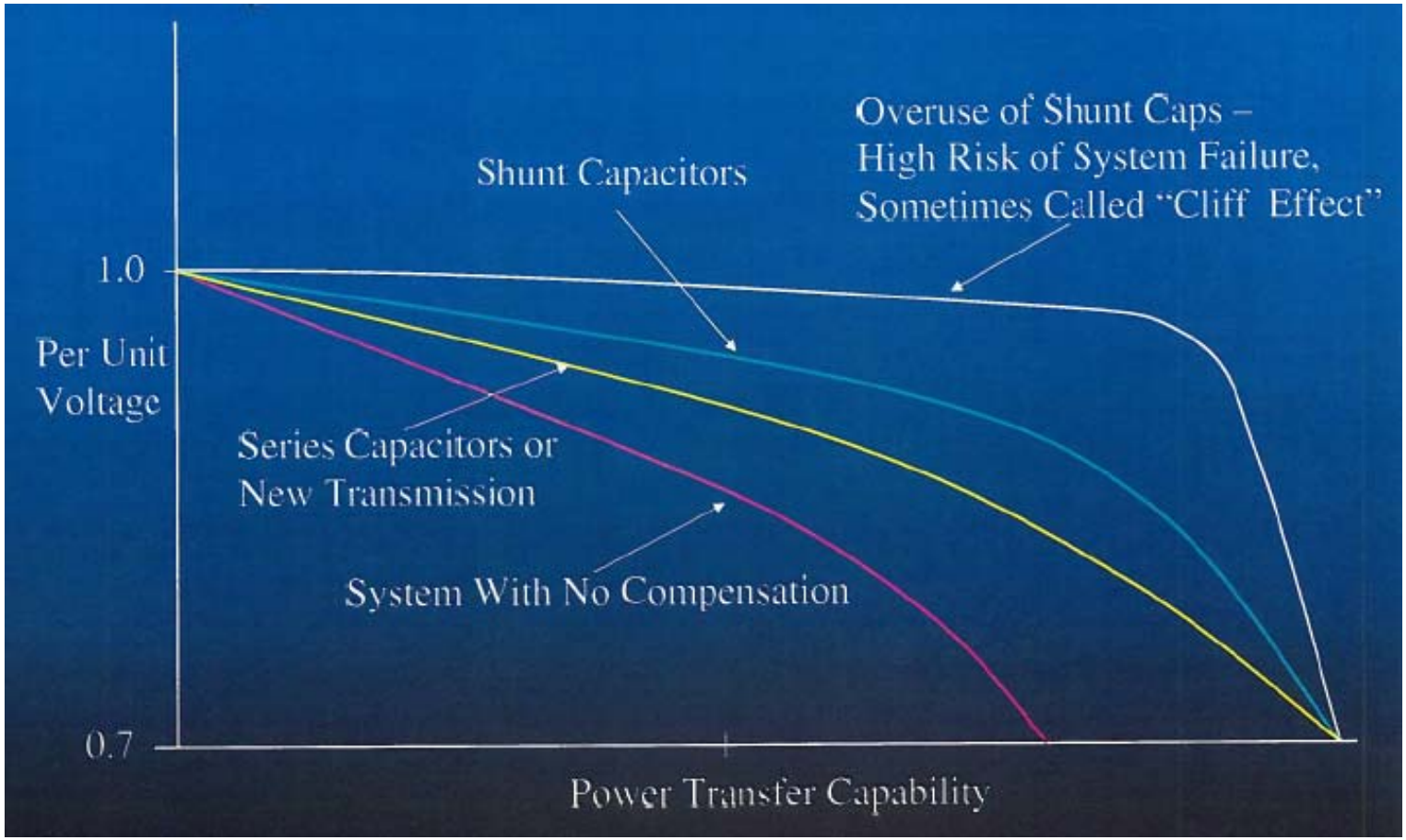

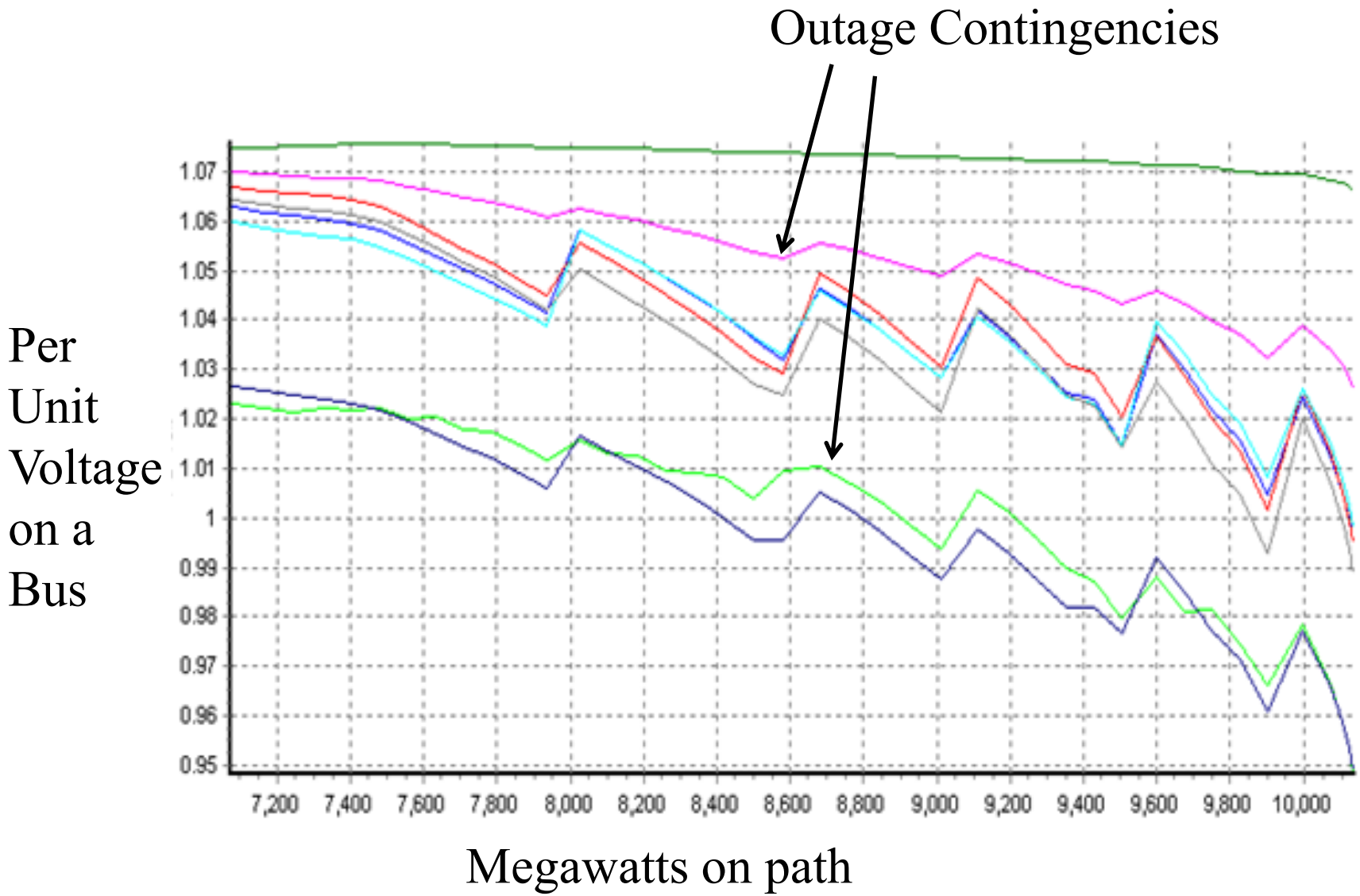
Outage Contingencies
Per Unit Voltage on a Bus
1.07
1.06
1.05
1.04
1.03
1.02
1.01
1
0.99
0.98
0.97
0.96
0.95
7,200
7,400
7,600
7,800
8,000
8,200
8,400
8,600
8,800
9,000
9,200
9,400
9,600
9,800
10,000
Megawatts on path

Transient Stability Problems

- Large angle needed to transfer large amounts of power across the system.
  - It is a function of your angle, receiving and sending end voltage, and system impedance.
  - A higher system impedance requires a larger angle to transmit the same amount of power.
- Loss of parallel transmission lines increases the system impedance and therefore the angle.
- Higher angle is an indication of higher system stress.
- Fast remedial action response is needed (8-30 cycles) to maintain a stable system

Transient Stability

- 3-phase fault with no RAS
- UNSTABLE

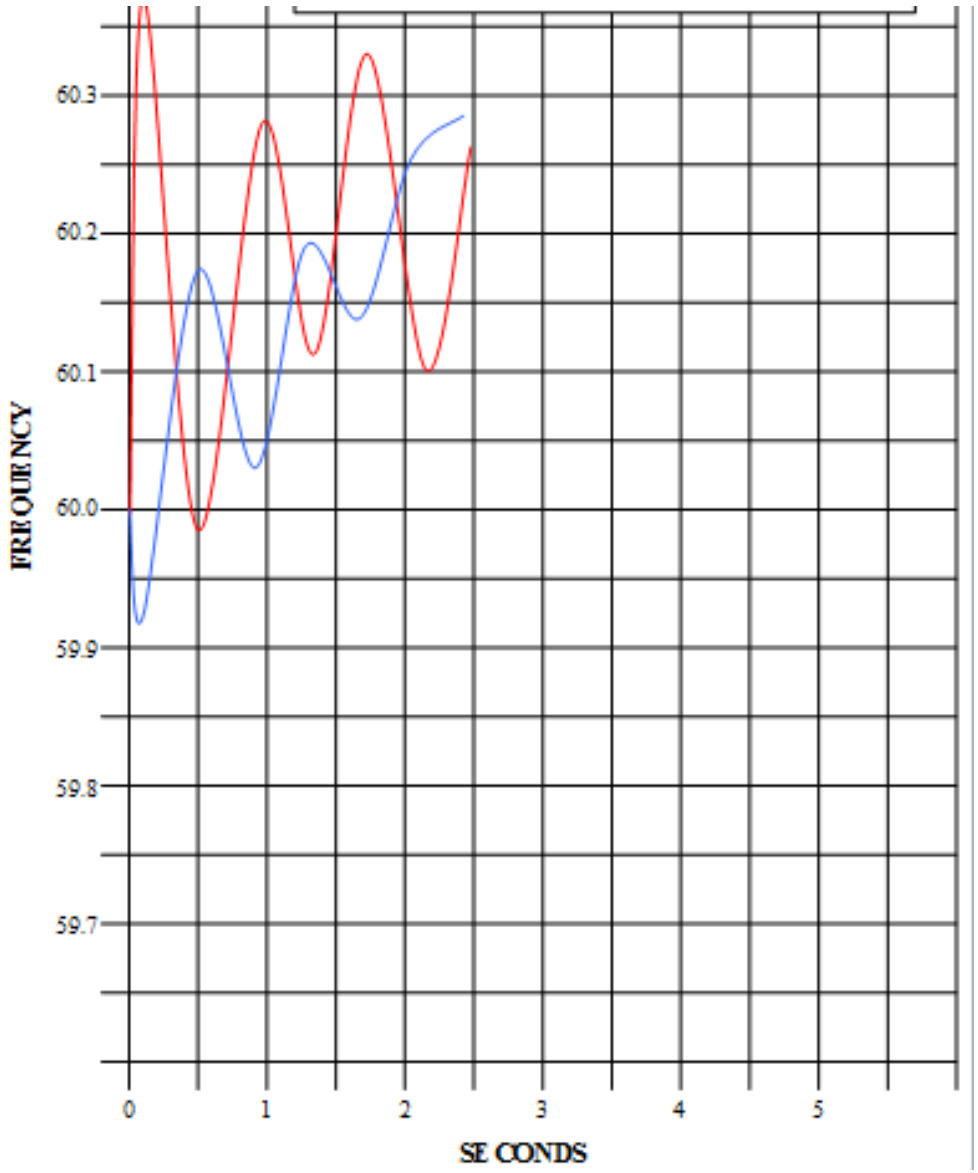

Transient Stability

- 3-phase fault at with 600 MW generator dropping
- Stable with low frequency

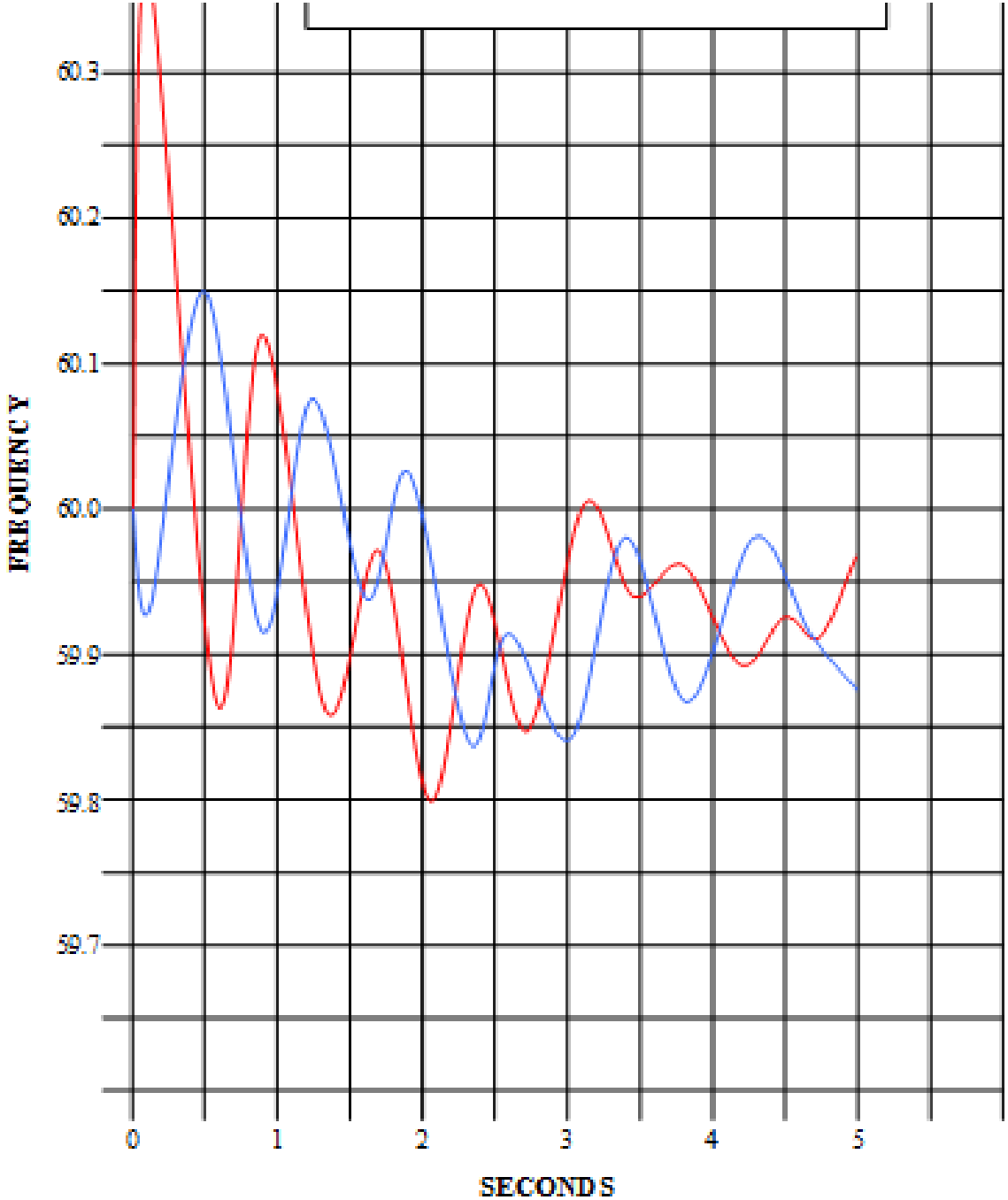

Transient Stability

- 3-phase fault with 1400 MW Chief Jo brake inserted for 0.5 seconds
- Stable and frequency normal

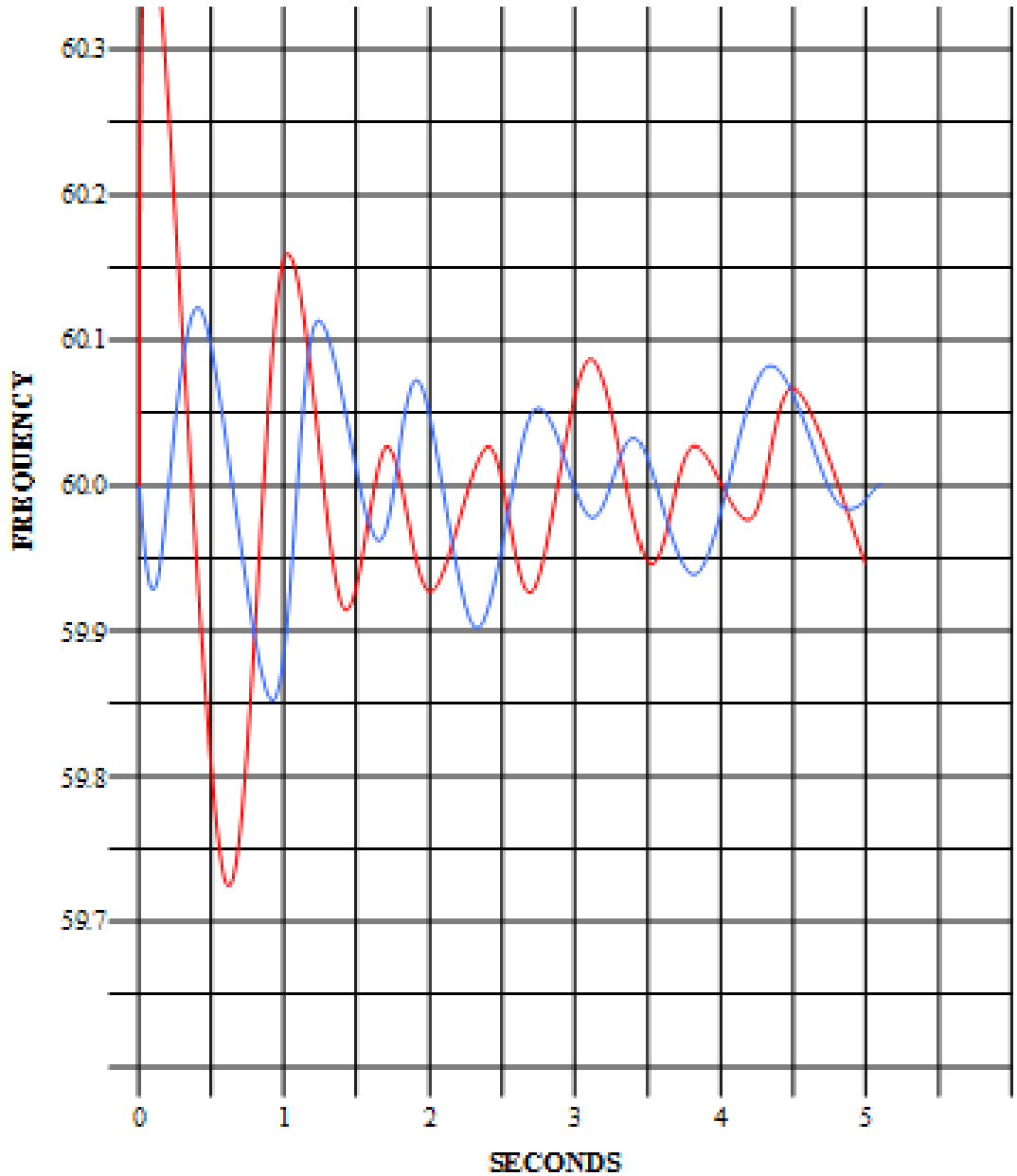

Chief Joseph Braking Resistor

- 1,400 MW three phase resistive load
- The world’s largest toaster

Manual Arming

- If a RAS is not automated, a Dispatcher must watch the line flows and outage conditions, and arm the appropriate RAS

Monitors and Alarms

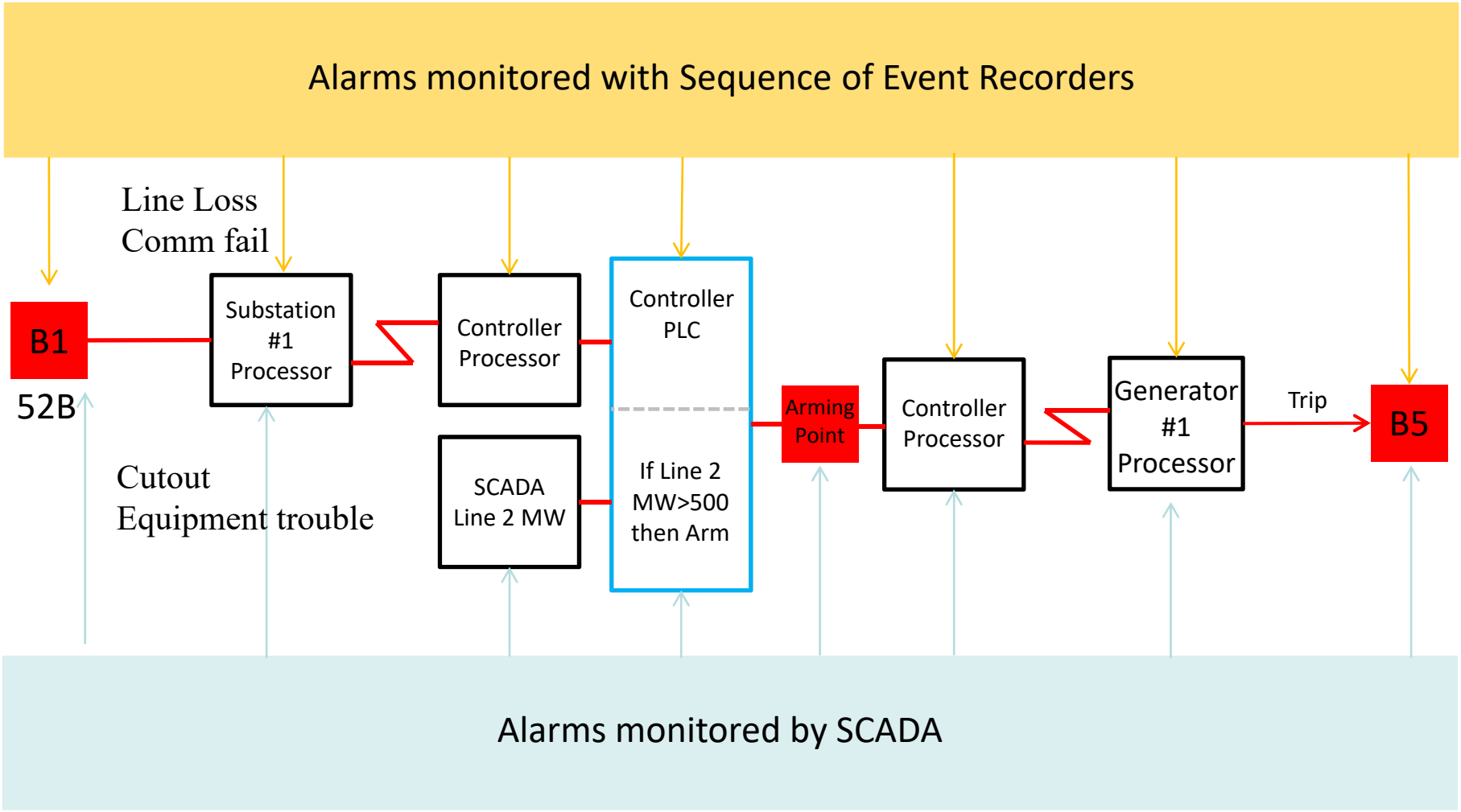

Film name?

When does the System Protection World care about RAS?

- NERC Required Annual RAS Test
  - Sending inputs from field sites to controllers
  - Assisting with overall test directed by Operations
- Setting changes in field sites
- New RAS Installations
  - assists with writing the procedure, and performing output site testing when required
- Alarm and event response

RAS Timing: From Fault Inception to Generator Drop

Fault Inception to time sent (msec)	Travel time	Processor time	PLC time	Processor time	Travel time	Breaker Time	Overall Time	Overall Cycles
25	20	8	30	8	20	50	161	9.7

Outage Considerations

- Cannot take both primary controls out of service without adjusting the system (limiting paths) before the outage
- When taking one controller or monitor, must consider what remains in service

What can be taken out?

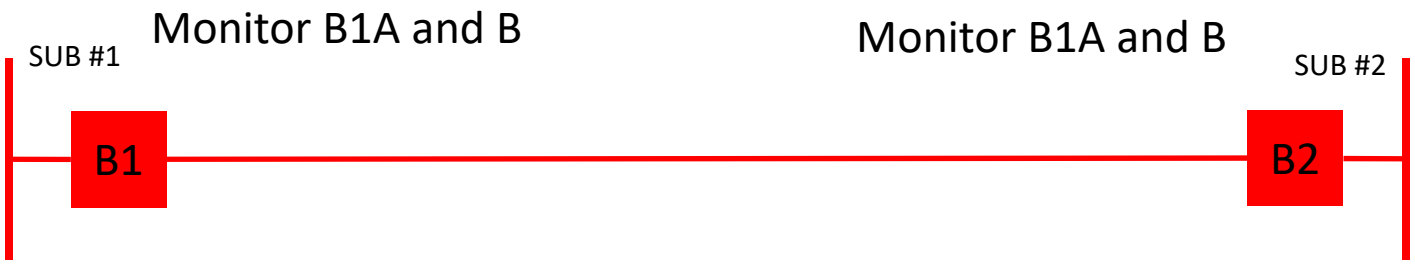

Common RAS Problems (about one per year)

- Customer changes out generator breaker, forgets to re-connect RAS trip input.
- DC ground induces temporary signal input to processor, triggering RAS
- Equipment left cut out, or wires lifted and not laid down
- Wrong unit armed to trip
- Communications failures in bad weather cause false indication of line loss

Summary

Hopefully you now know:

1. What is a RAS?
2. Why do we have RAS?
3. What Makes Up a RAS?
4. Where would we be without them?
5. Who has them?

WECC Meeting Room

WECC RASRS

MEMBERS

Search:

Name	Organization	Role
Leghari, Noor	Alberta Electric System Operator	Member
Flores, Al	Arizona Public Service Company	Member
Damron, Kevin	Avista Corporation	Member
Kerr, John	Bonneville Power Administration	Member
Barone, Ralph	British Columbia Hydro & Power Authority	Member
Subakti, Dede	California Independent System Operator	Member
Smith, Tyler	Idaho Power Company	Member
Rodriguez, Paul	Imperial Irrigation District	Member
Kirby, Douglas	Los Angeles Department of Water and Power	Member
Kachmarik, Daniel	NorthWestern Energy	Member
Henneberg, Gene	NV Energy	Chair
Erwin, Davis	Pacific Gas and Electric Company	Member
Patzkowski, Milton	PacifiCorp	Vice Chair
Nuthalapati, Sarma	Peak Reliability	Member
Avendano, Omar	Portland General Electric Company	Member
Dhillon, Malkiat	Sacramento Municipal Utility District	Member
Heap, Brant	Salt River Project	Member
Iliev, Karl	San Diego Gas & Electric	Member
Zhang, Bill	Southern California Edison Company	Member
Head, Wilson	Western Area Power Administration	Member

WECC Meeting Activity

- New RAS (or modification of existing)
  - Purpose and categorization
  - Design of the system
  - Planning study results
  - Communications
- Results
  - Approval
  - Conditional Approval (must come back and fill in missing info)
  - Rejection or Deferral

Western Interconnection

- About 350 RAS
  - 140 trip generation
  - 30 ramp generation
  - 70 do load shed
  - 30 trip or insert reactive devices
  - 20 arm on configuration; 80 arm on MW flow
  - 150 trigger on loss of line or transformer
- About 30 entities

Takeaways

- RAS is typically “problem here, solution over there”.
- Find out where your company has RAS (if they will reveal the information), and how they work, and what problem they solve.
- Find out which department tests RAS at your company
- How do you tell the RAS a line is out for maintenance and to ignore the inputs?