Time synchronization over Ethernet for Power Applications

by Galina S. Antonova based on IEEE PSRC WG H7/H24/SubC7 and IEEE PSCC TF P1 presentations

Outline

- Introduction
- IEEE 1588-2008
- IEEE C37.238-2011
- IEEE C37.238 Revision
  - Base profile IEC/IEEE 61850-9-3:2016
  - Extended profile IEEE C37.238-2017
- IEEE ICAP overview
- Conclusion

Introduction

- IEEE 1588-2008 specified Precision Time Protocol (PTP), as a set of tools to achieve accurate timing over Ethernet
- IEEE 1588-2008 introduced industry-specific PTP profiles
  - Clause 19.3 describes PTP profiles
  - Annex J specifies 2 default PTP profiles
- IEEE C37.238-2011 specified a PTP profile for Power System Applications

Application Examples

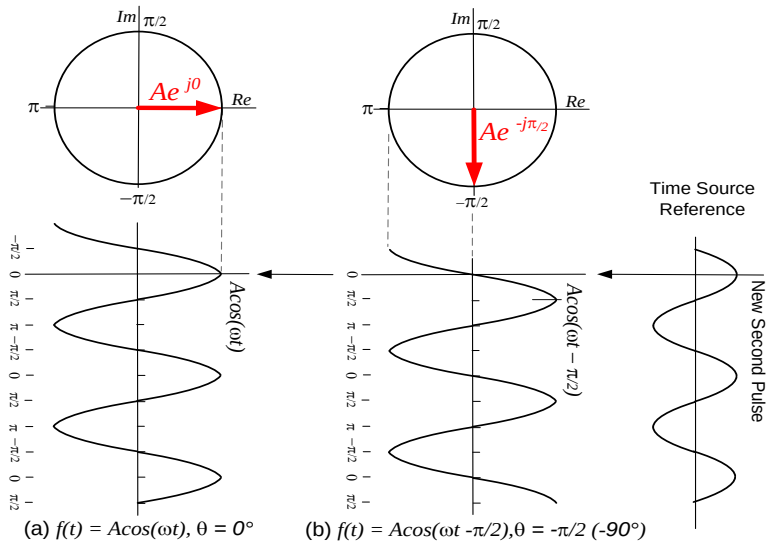

Line Differential Protection

- Critical protection function
- Compares samples with same timestamp
- Sampling rate must be synchronized
- Tens of samples per cycle

1 µs accuracy of relative time

Sampled Analog Values

- MU sampling must by synchronized
- IEC 61850-7-2 (Service Models)
- IEC 61850-9-2 (Layer 2 /Ethernet)

1 µs accuracy of relative time

Synchrophasors

- Synchronized phasors (magnitude, angle)
- For metering, possibly protection
- Inside substation & wide geographic area
- 1% Total Vector Error (26 µs for 60Hz)
- Specified in IEEE C37.118.1/2-2011/2014

1 µs accuracy of absolute time

SCADA, Events recording

1 ms accuracy of absolute time

Time Synchronization Alternatives

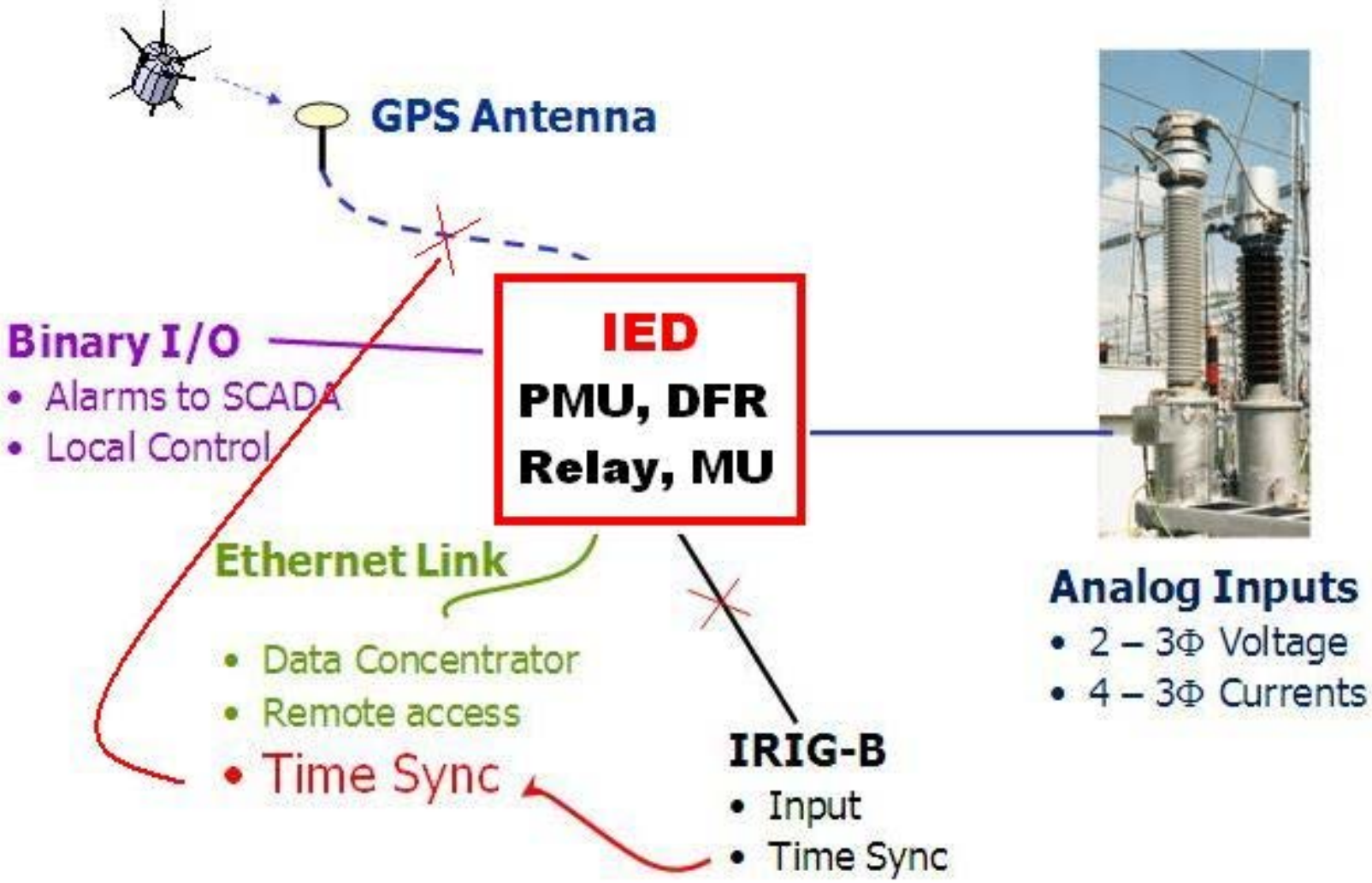

Time Distribution Technologies

	IRIG-B	(S)NTP	PTP
Accuracy (typical)	1-10μs	100μs-1ms	100ns-1μs
Transport media	Dedicated cable	Ethernet cable	Ethernet cable
Protocol style	Master-slave	Client-server	Master-slave
Built in latency correction	No	Yes	Yes
Set-up	Configured	Configured	Self-organizing, or configured
Update intervals	1 second	minutes	10ms – 1 second
Specialized hardware	Required	No	Required

Protection/Synchronization Zones

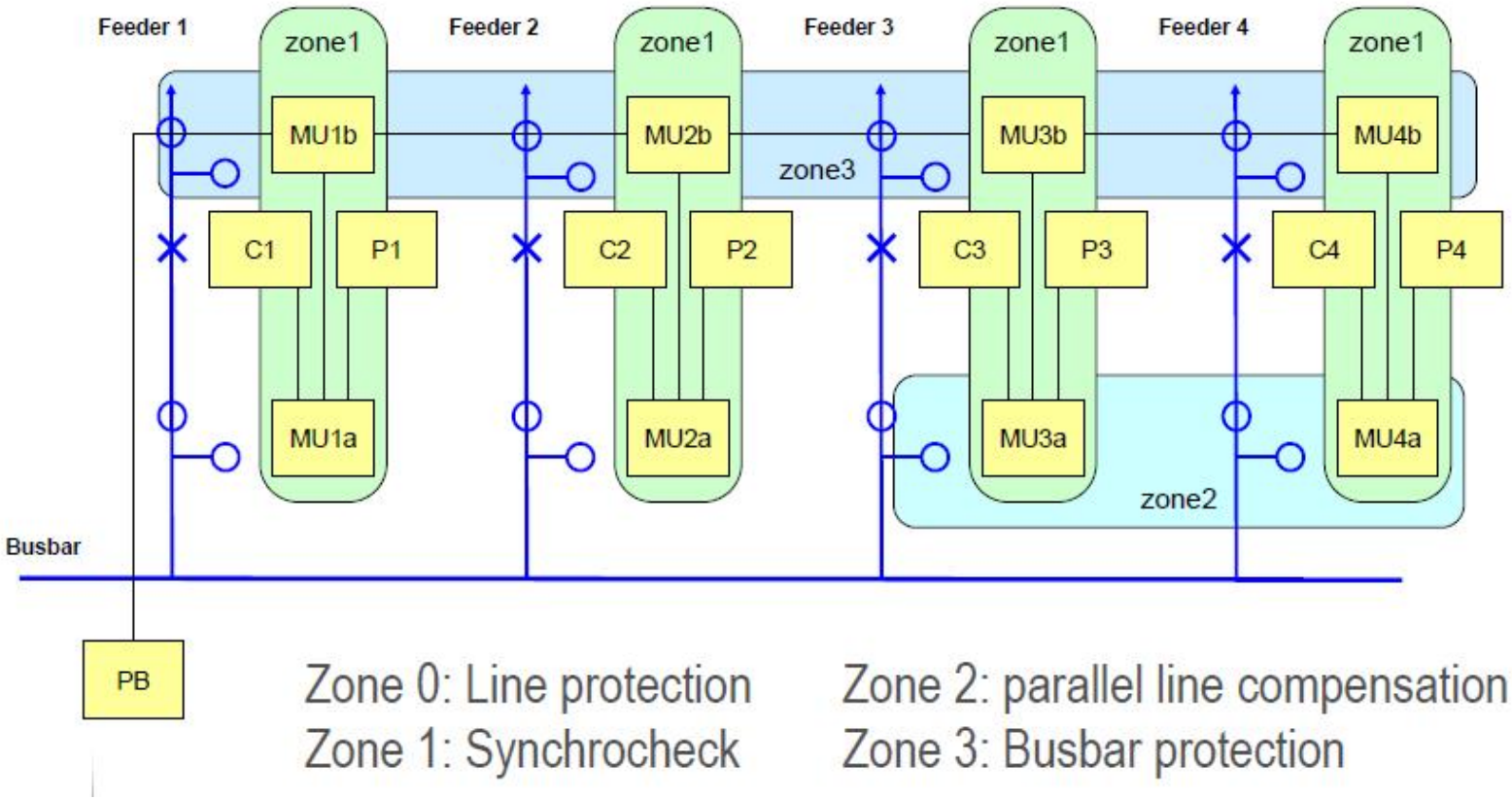

Source: PSRC WG H7 Presentation "Time Synchronization and Network Topology" by Christoph Brunner, January 14, 2009

IEEE 1588 Overview

- IEEE 1588-2008 standard
- Time distribution over Ethernet
- Message-based protocol
- Delay compensations
- Auto selection of best master

IEEE 1588-2008 Standard

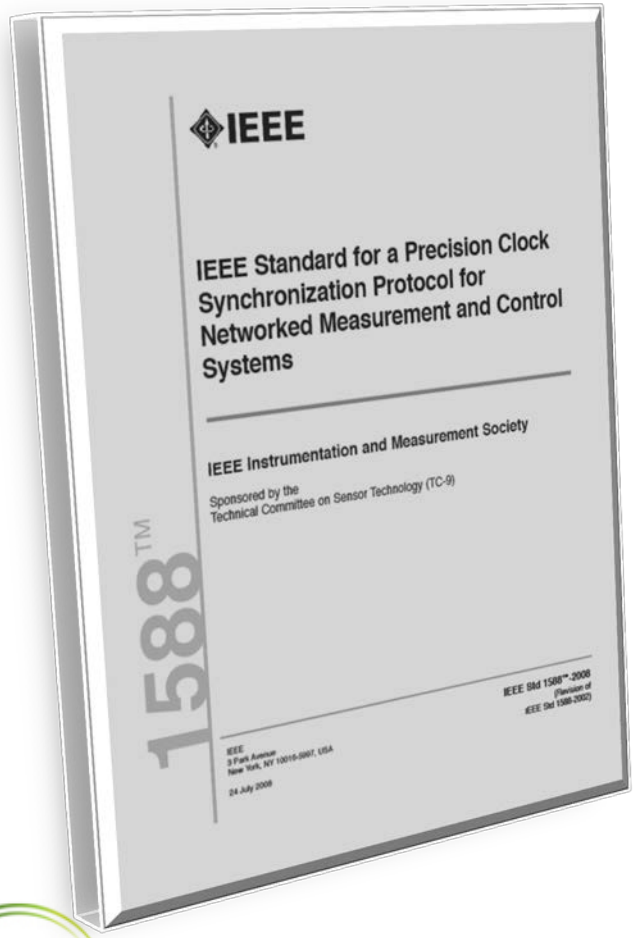

IEEE 1588-2008 ("version 2")

- **Defines Precision Time Protocol (PTP)**
- Used to synchronize independent clocks on separate nodes of a distributed system to a high degree of precision,
- defines how to transfer precise time over networks.
- Uses "***Profiles***"
  - Protocol features/settings/ranges grouped into industry adopted "standards"
  - Defines only the "*Default Profile*"
  - Industry-specific profiles can be defined by IEEE or other standardization organizations

Synchronization Network Example

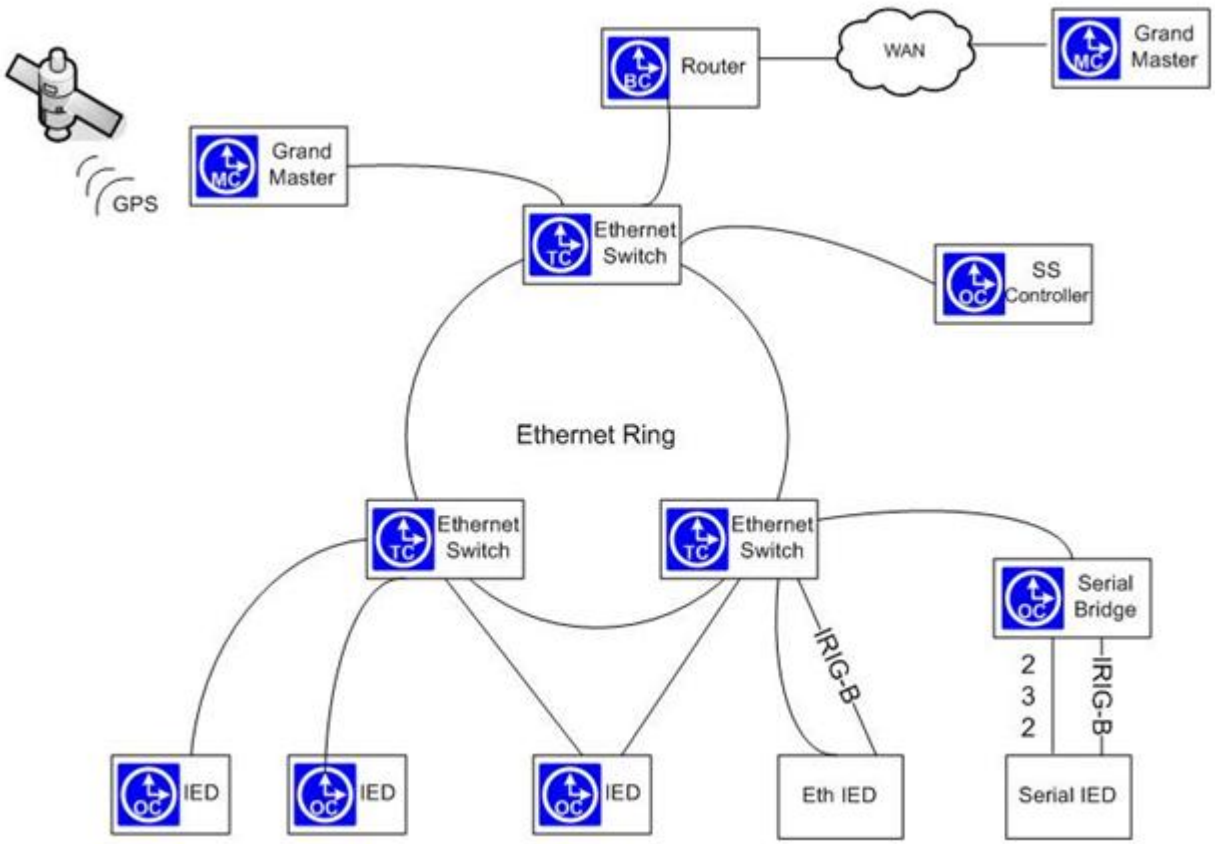

Source: PSRC WG H7 Presentation "IEEE 1588v2 Profile for Power Systems" by Roger Moore, September 2008

PTP Devices

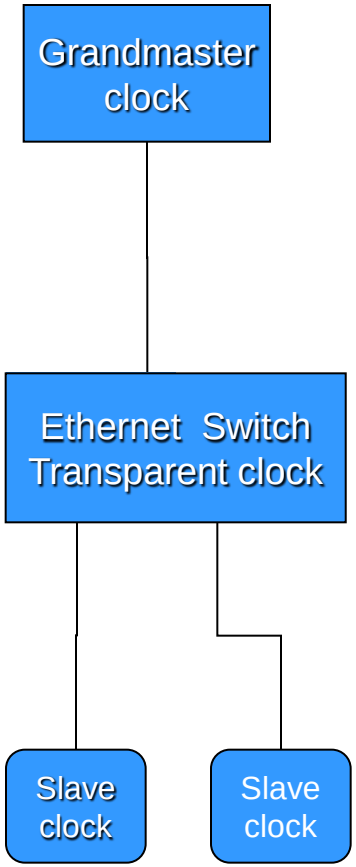

- Time transferred from Grandmaster to Slaves
- Transparent clock
  - Ethernet switch with improved PTP accuracy
  - Corrects for its delay
- Ordinary clock
  - A clock with single connection
  - Can be Master or Slave
  - Integrated into application devices such as IEDs

PTP Messages

Master to slaves

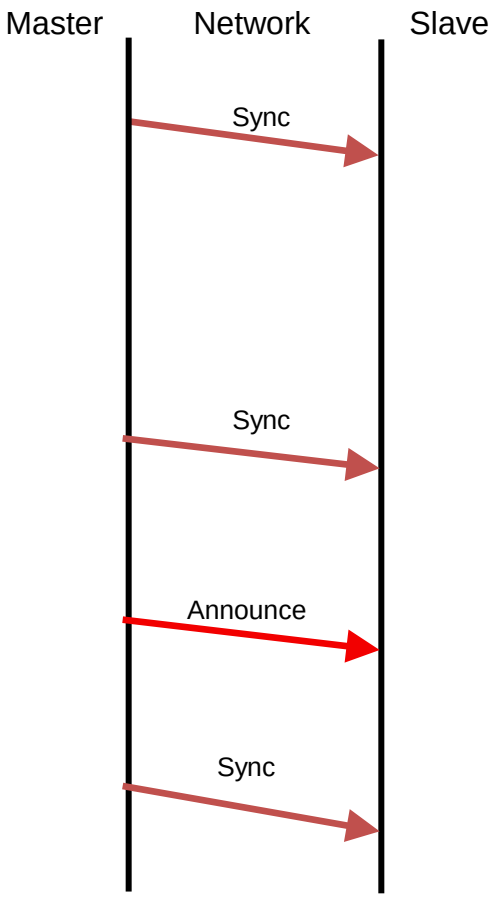

Adjacent Devices

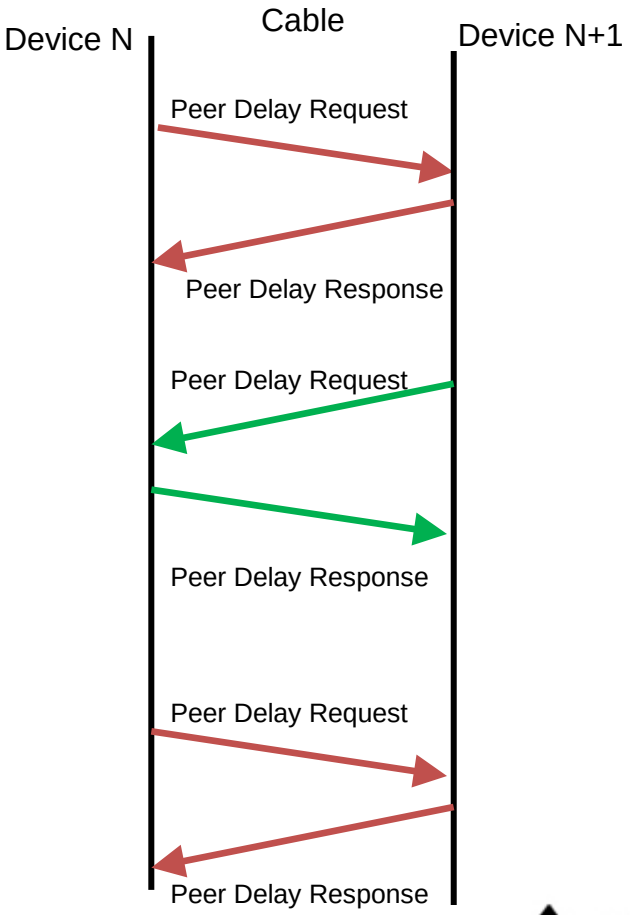

PTP Delay Compensation

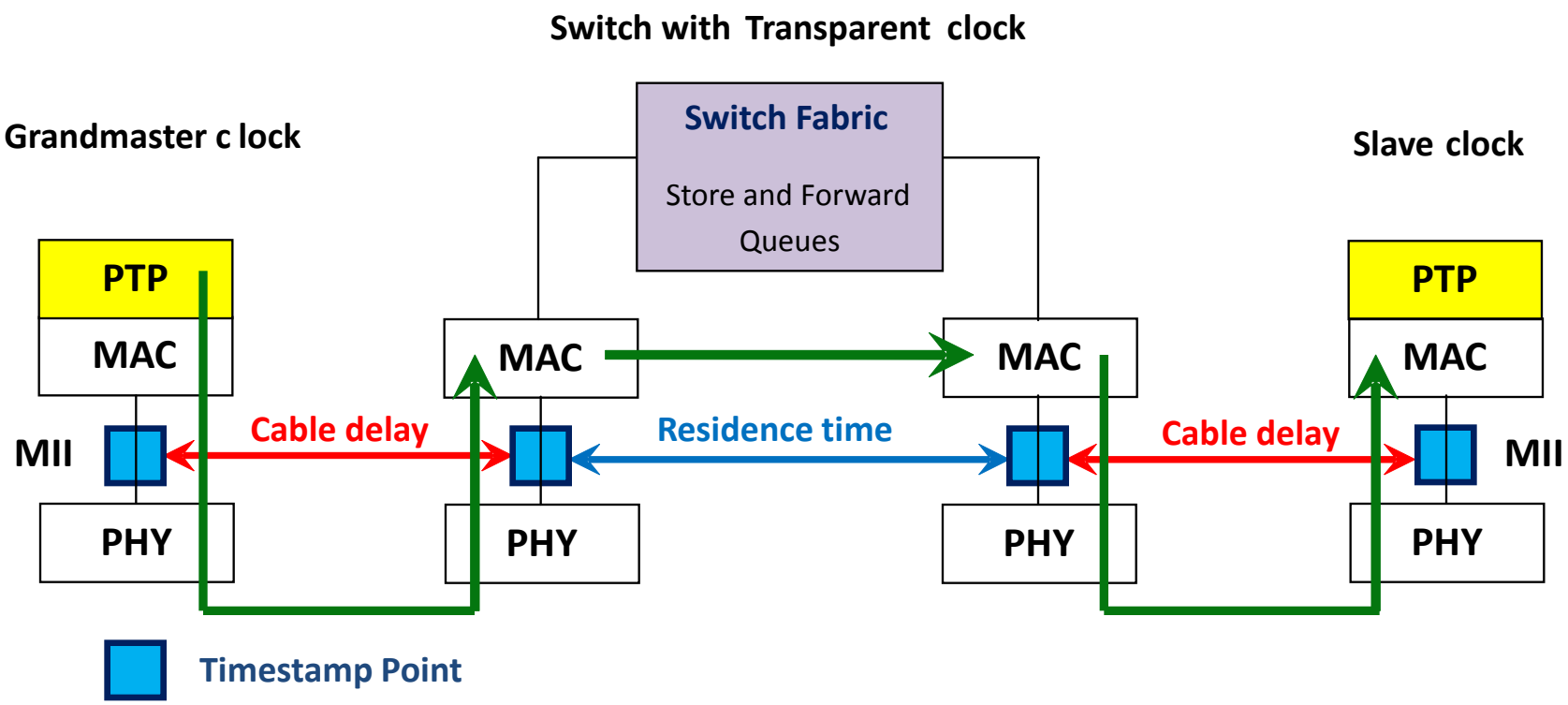

Best Master Clock Algorithm

The algorithm select the best master, based on information all devices receive in the *Announce* message:

```
priority1: 50
grandmasterClockClass: 6
grandmasterClockAccuracy: The time is accurate to within 100 ns (0x21)
grandmasterClockVariance: 25600
priority2: 128
grandmasterClockIdentity: 0x00b0aefffe000006
localStepsRemoved: 0
TimeSource: GPS (0x20)
```

- The unique clockID is the tie-breaker.

IEEE C37.238 Scope and Purpose

- This standard specifies a common profile for the use of IEEE 1588 Precision Time Protocol (PTP) in power system protection, control, automation, and data communication applications utilizing an Ethernet communications architecture.

- The purpose of this standard is to facilitate adoption of IEEE Std 1588-2008 for power system applications requiring high precision time synchronization.

IEEE C37.238-2011

- Approved IEEE 1588/IEC 61588 standard calls for generation of industry-specific profiles
- IEEE C37.238 Power Profile published in July 2011
- Produced by IEEE PSRC WG H7/Sub C7 in co-operation with IEC TC57 WG10
- WG philosophy
  - Reduce mandatory features
  - No options unless justified

IEEE STANDARDS ASSOCIATION IEEE

IEEE Standard Profile for Use of IEEE 1588™ Precision Time Protocol in Power System Applications

IEEE Power & Energy Society

Sponsored by the
Power System Relaying Committee
and
Substations Committee

IEEE
3 Park Avenue
New York, NY 10016-5997
USA

14 July 2011

IEEE Std C37.238™-2011

IEEE PES Power & Energy Society®

IEEE

IEEE C37.238 Revision

IEEE C37.238-2011 was split into 2 standards:

- IEC/IEEE 61850-9-3:2016 base profile
  - Specifies common base functionality
- IEEE C37.238-2017 extended profile
  - Specifies extended functionality
    - Dynamic time inaccuracy for better monitoring of delivered time quality
    - IRIG-B replacement and support for protocol converters

IEC/IEEE 61850-9-3:2016

- Specifies a base profile
- Core features are the same as in C37.238-2011
  - Layer 2 mapping, multicast, 1s interval, P2P delay
- VLAN tags are out of scope (a change)
- Performance requirements updated
  - Boundary Clocks and media converters are added
- Management mechanisms expanded (change)
  - IEEE C37.238-2011 MIB was removed

IEC/IEEE 61850-9-3:2016

- TLV is ignored for Best Master Clock Algorithm (a major technical change)
  - Best clock (grandmaster) is selected by BMCA
  - C37.238-2011 required presence of profile-specific TLV for participation in BMCA
  - This provided profile isolation but introduced a departure from standard IEEE 1588-2008 BMCA
  - TLV was removed and now standard IEEE 1588-2008 BMCA is used

IEC/IEEE 61850-9-3:2016

- Domain number – 0 default, 93 recommended
  - A way to separate profiles by domain number

- ATOI TLV is optional
  - ALTERNATE_TIME_OFFSET_INDICATOR (ATOI) TLV
  - A mechanism to distribute local time

Maximum steady-state time error

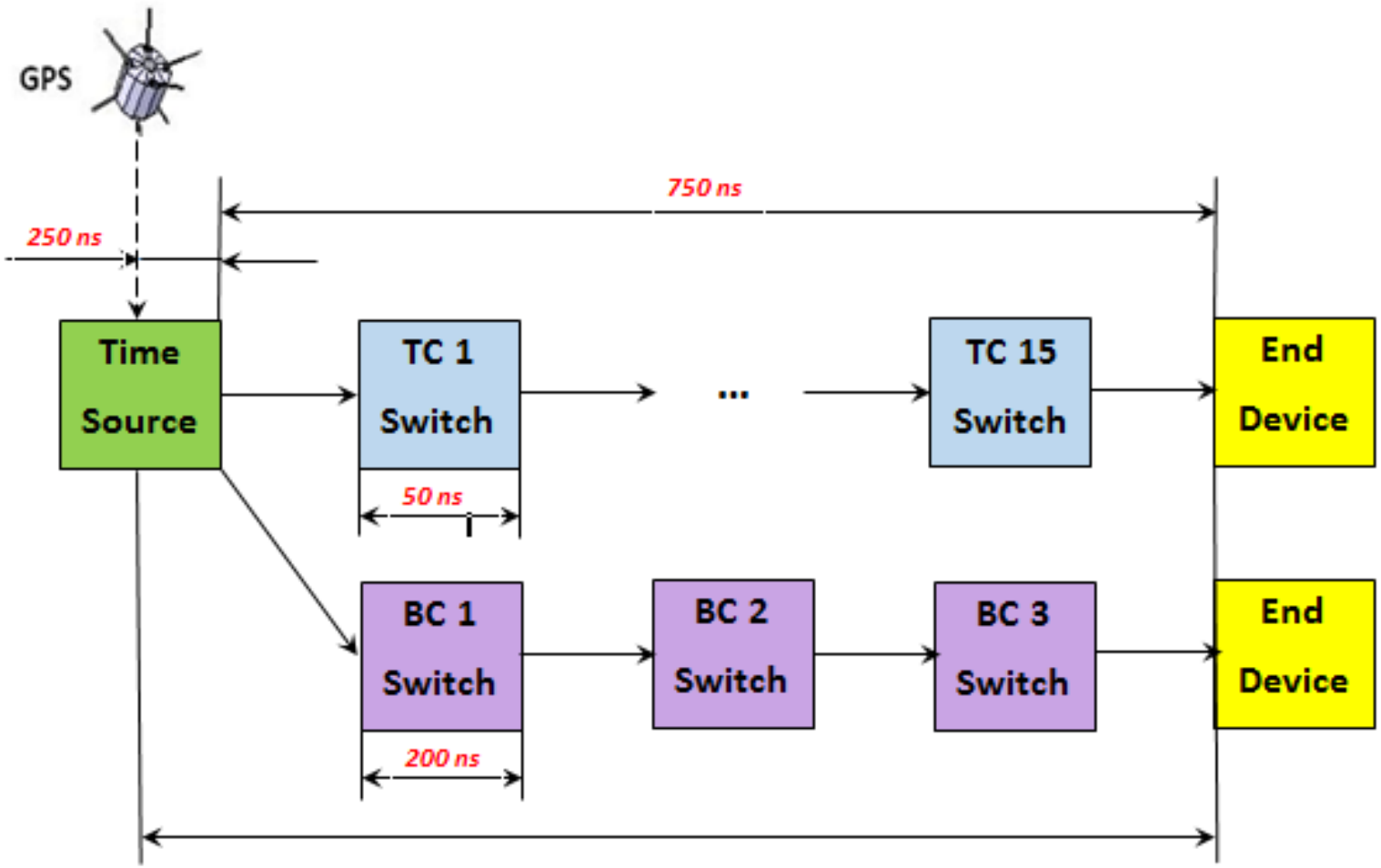

± 1 µs time inaccuracy

IEEE C37.238-2017

- Specifies extended profile
- ATOI TLV (mandatory)
  - IEEE 1588-2008 standard TLV is used
  - requirements are tightened
  - Required for PTP to IRIG-B converters
- Time Inaccuracy TLV (mandatory)
  - Dynamic time inaccuracy is required for some critical applications such as those that use synchrophasors and sampled values technologies
  - Version 2, with a migration path from Version 1

Clock Drift and Time Inaccuracy

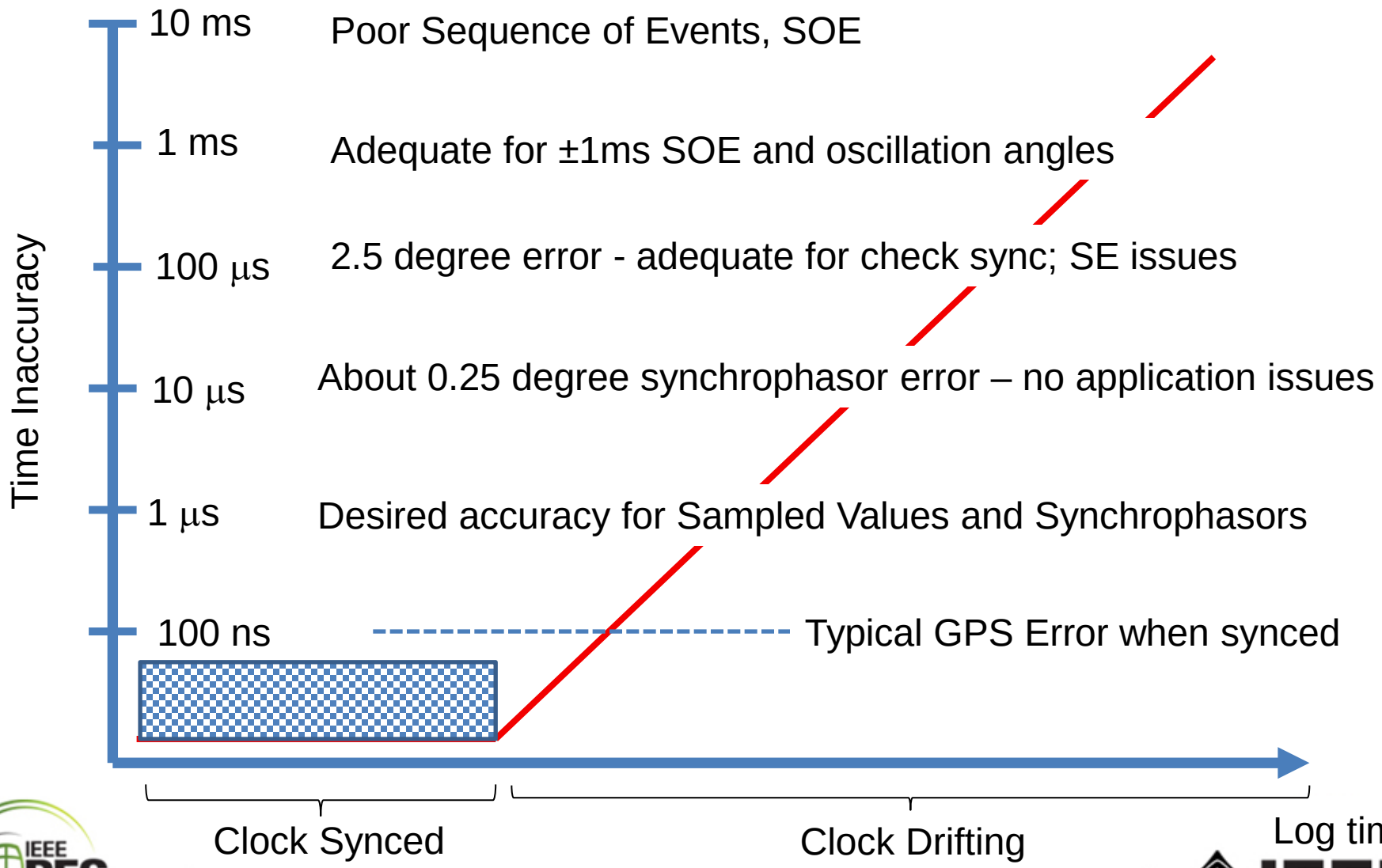

Cumulative Dynamic Time Inaccuracy

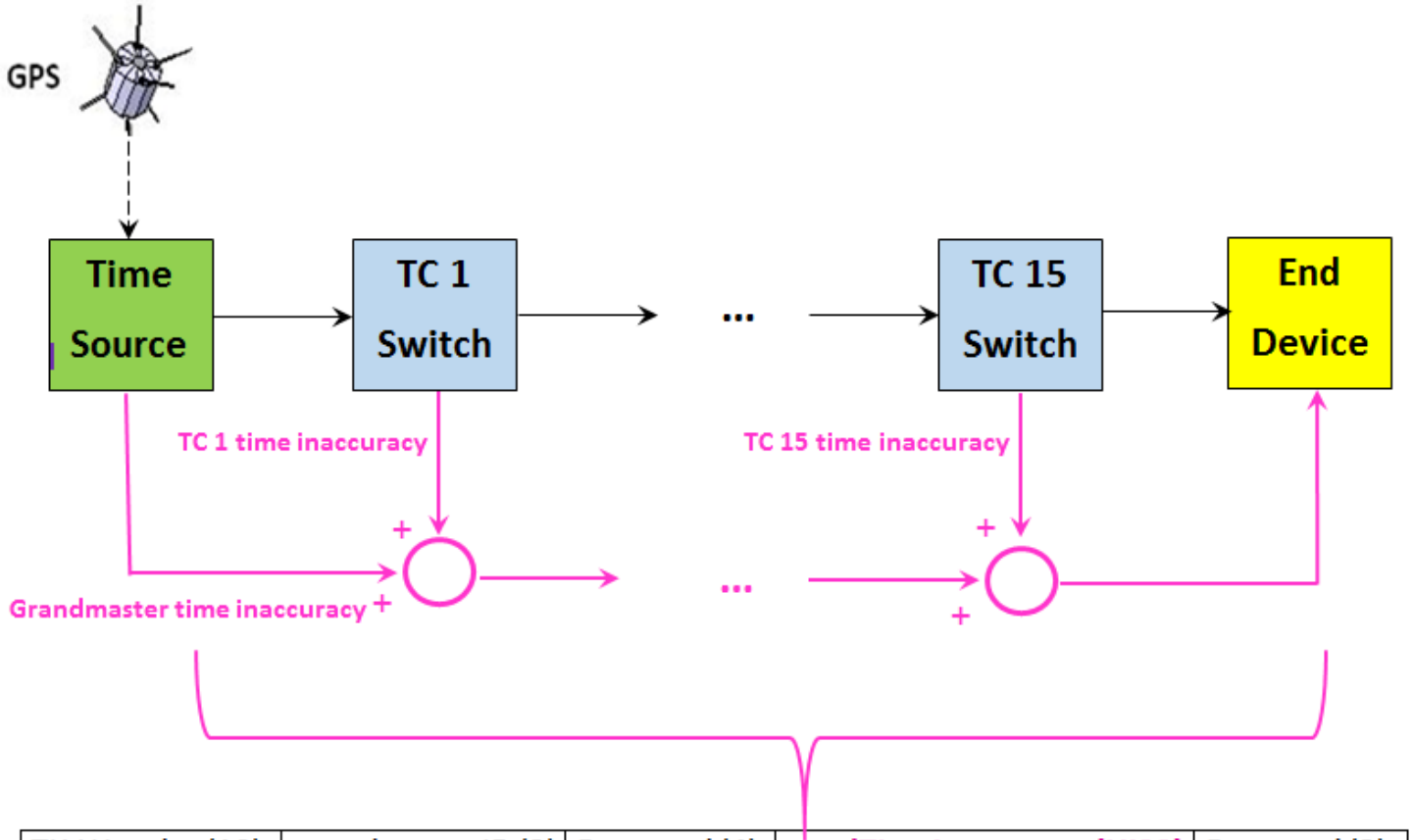

TLV Header (10)	grandmasterID (2)	Reserved (4)	totalTimeInaccuracy (UI32)	Reserved (2)

IEEE_C37_238 TLV (profile-specific)

Max Time Error for Synchrophasors

Question: is a Synchrophasor Usable?

- Determined by the clock's "estimate" of maximum time error
  - Should be testable to a 3-Sigma variance
- The "estimate" of the Clock Quality is communicated from the clock to the PMU via:
  - TQ and CTQ field in the IRIG-B Time Code
  - TimeInaccuracy TLV in C37.238
    - Grandmaster TimeInaccuracy
    - Distribution TimeInaccuracy
    - Source TimeInaccuracy

Max Time Error for Synchrophasors

- This “Time Inaccuracy” estimate is then mapped into the Time Quality of Timestamp communicated by the PMU

- The Application using the Synchrophasor makes the determination of whether to use the Synchrophasor based on the estimated error in the Timestamp

C37.118 Time Quality Indicators

Table C.2—Inaccuracy mapping between IEEE Std C37.238 and IEEE C37.118.1 and IEEE C37.118.2 fields

IEEE C37.238 totalTimeInaccuracy,	IEEE C37.118.2 MSG_TQ field IEEE C37.118.1 IRIG-B TQ field	IEEE C37.118.2 PMU_TQ field IEEE C37.118.1 IRIG-B CTQ field
If FFFFFFFF hex (unknown, or > ~4s) else use below	15	7
If TAI-UTC offset "unknown" (currentUtcOffsetValid flag= 0) (e.g., due to expiry of last IERS bulletin-C)	11 (for 1 s to >10 s) else use below	7 else use below
If clock is "locked" (clockClass= 6)	0 else use below	ignore (use below)
100 000 001 to 1 000 000 000	10	7
10 000 001 to 100 000 000	9	7
1 000 001 to 10 000 000	8	6
100 001 to 1 000 000	7	5
10 001 to 100 000	6	4
1001 to 10 000	5	3
101 to 1000	4	2
11 to 100	3	1
1 to 10	2	1
0	1	1

IEEE C37.238-2017

- IRIG-B replacement, Annex C
  - added support for all IRIG-B fields
  - useful for protocol converters
- Domain number is 254 (a change)
  - A mechanism for profile separation
  - C37.238 revision drafts specified domain 238
  - Domain 254 was coordinated with 1588 WG
- Mixed profile operation, Annex E

Mixed profiles interoperation

IEEE 1588
Time-Distribution Network

Comprising:
- Time sources (e.g. GPS)
- Grandmaster Clocks, GMCs
- Boundary Clocks, BCs
- Transparent Clocks, TCs

Per IEEE C37.238-2017
Domain= 254 (default)

Ethernet LAN/WAN Pt-Pt Links

1588 Announce, Sync, & Peer-Delay Messages

Time-Users (IEDs)

Time-User Requirements	1588 PROFILES*		
	C37.238 -2017	61850 -9-3	1588 Annexes F & J.4
Steady State Time Inaccuracy < 1µs	✓	✓	X
Dynamic Time Inaccuracy to determine if time is adequate (e.g. during congestion, power recycling)	✓	X	X
IRIG-B support (per IEEE C37.118), (e.g. for 1588=>IRIG-B Protocol Converters)	✓	X	X
User-configurable clock-source IDs (e.g. for Timing-Island applications)	✓	X	X
…If none of the above needed	✓	✓	✓

*Other 1588 Profiles can co-exist on the network (since they will use a different domain (not 254))
e.g. IEEE 802.1AS for "Time Sensitive Networks" and ITU G.8275 for Telecom (domains 44 to 63)

Mixed profiles interoperation

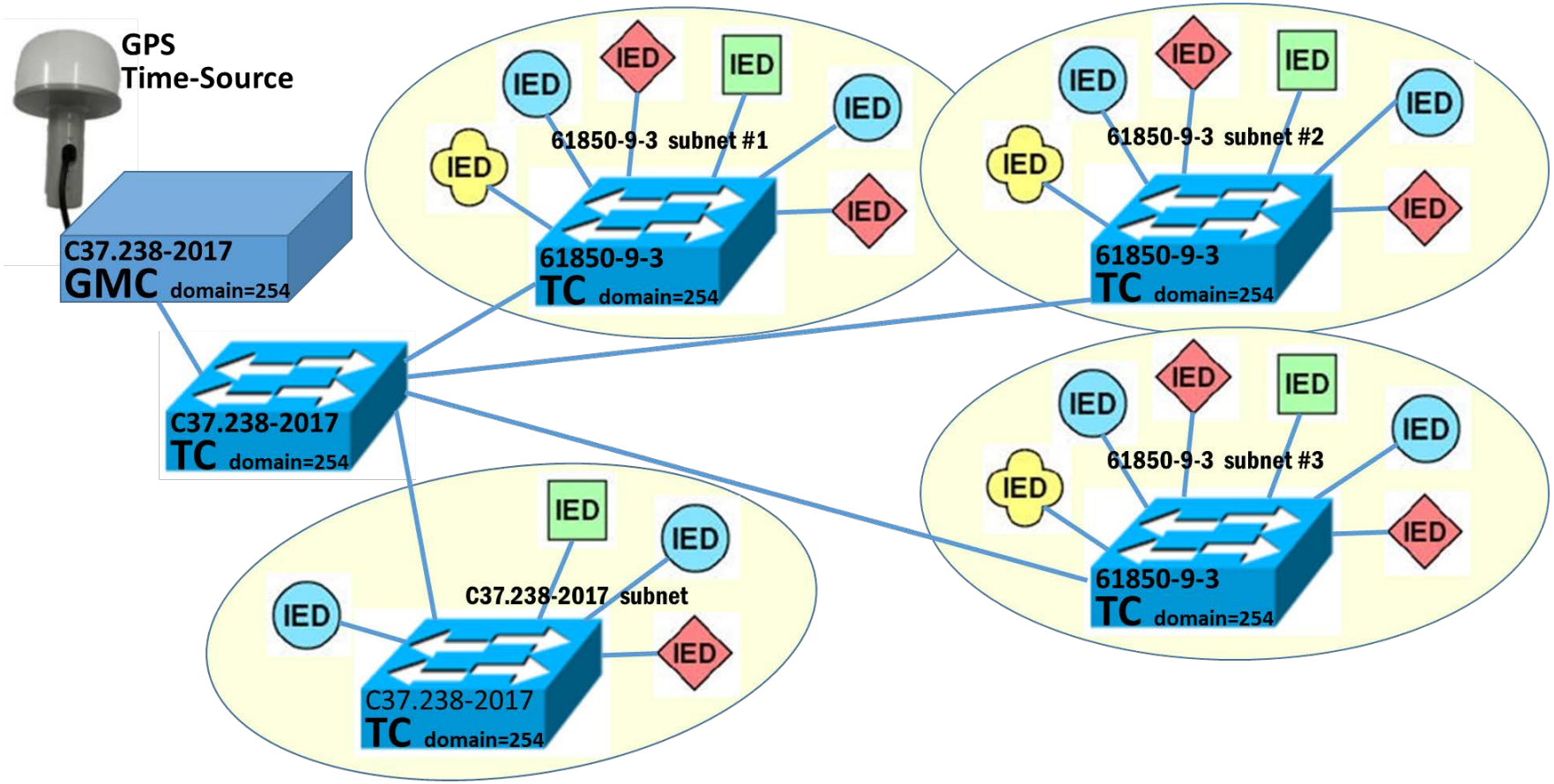

NOTE – For all C37.238-2017 IEDs, the chain of TCs, BCs (if used) and GMC to the GPS time source must all support the C37.238-2017 profile.

IEEE C37.238 Testing Lemgo, March 2011

ISPCS PTP Plugfest San Francisco, Sept 2012

17 out of 41 participating organizations tested IEEE C37.238

IEEE ICAP Certification

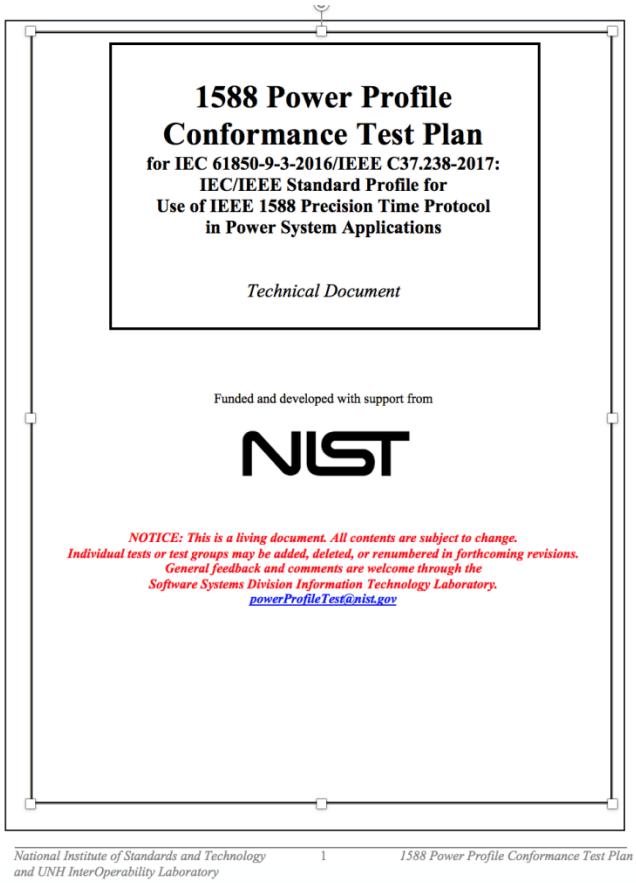

1588 Power Profile Conformance Test Plan
for IEC 61850-9-3-2016/IEEE C37.238-2017: IEC/IEEE Standard Profile for Use of IEEE 1588 Precision Time Protocol in Power System Applications

Technical Document

Funded and developed with support from

NIST

NOTICE: This is a living document. All contents are subject to change.
Individual tests or test groups may be added, deleted, or renumbered in forthcoming revisions.
General feedback and comments are welcome through the
Software Systems Division Information Technology Laboratory.
powerProfileTest@nist.gov

National Institute of Standards and Technology and UNH InterOperability Laboratory 1 *1588 Power Profile Conformance Test Plan*

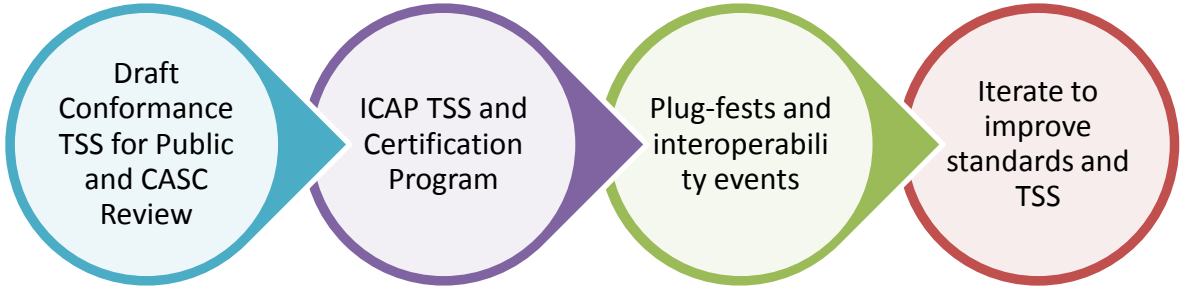

- Steering Committee comprised of industry stakeholders from manufacturers, utilities and standards developers are leading the effort.
- IEEE 1588 CASC is developing a comprehensive TSS in collaboration with UNH-IOL on behalf of NIST grant.
- Interoperability tests and events are an expectation for certifying PTP Power Profile devices.
- IEEE 1588 CASC Membership and Pilot Testing

Test Suite Specification

University of New Hampshire InterOperability Laboratory

Conformance Tests

- Best Master Clock Algorithm
- PTP Power Profile Attributes
- TimeInaccuracy specifications

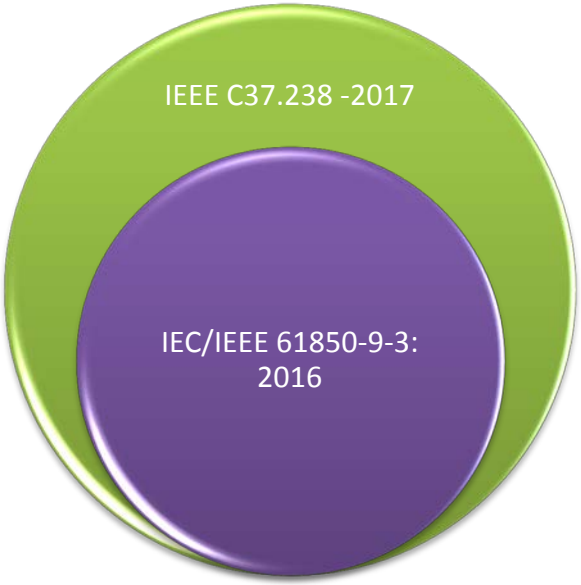

Interoperability Tests

- VLAN testing

Validation Plan

- Participate in industry plugfests and interoperability test events
- Evaluate whether conformance tests cover the basis to ensure interoperability
- Can the end-to-end system support industry application requirements?

Conclusions

- Time synchronization is critical for various Power system applications
- Precise time can be distributed over Ethernet using Precision Time Protocol (PTP)
- PTP profiles for Power Industry are specified by
  - IEEE C37.238-2011
  - IEC/IEEE 61850-9-3:2016, and
  - IEEE C37.238:2017 standards
- Summary Paper on PTP profiles will be presented at Georgia Tech Conference 2018