Environmentally Friendly Solution to Ground Hazards in Design of Bridge Abutments Using Timber Piles

Hamidreza Sadeghi, Ph.D.
Senior Geotechnical Engineer
Katahira & Engineers International
Tokyo, Japan

8th Australian Small Bridges Conference
27-28 November 2017, Surfers Paradise Marriott Queensland, Australia

Bohol Island

Seismicity of The Philippines

The Philippine Islands lie within a broad zone of deformation between the subducting Eurasian and Philippines Sea Plate. This deformation is manifested by a high level of seismicity, faulting, and volcanism.

Distribution of Active Faults and Trenches in the Philippine Islands

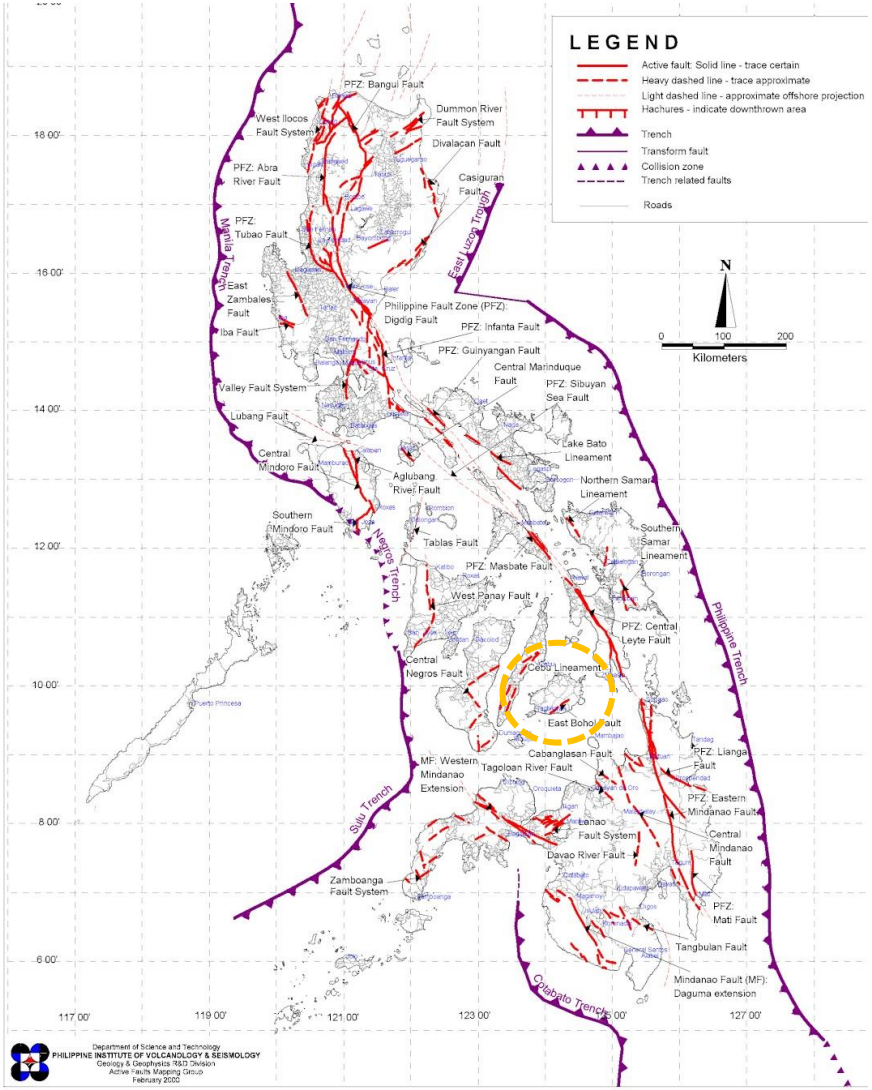

Seismic Hazards of Bohol Island

Bohol earthquake occurred on 15 October 2013 at 8:12 in Bohol, Philippines. The magnitude of the earthquake was recorded at Mw 7.2 and its depth of focus was 12 kilometers (7.5 mi). It affected the whole Central Visayas region, particularly Bohol and Cebu.

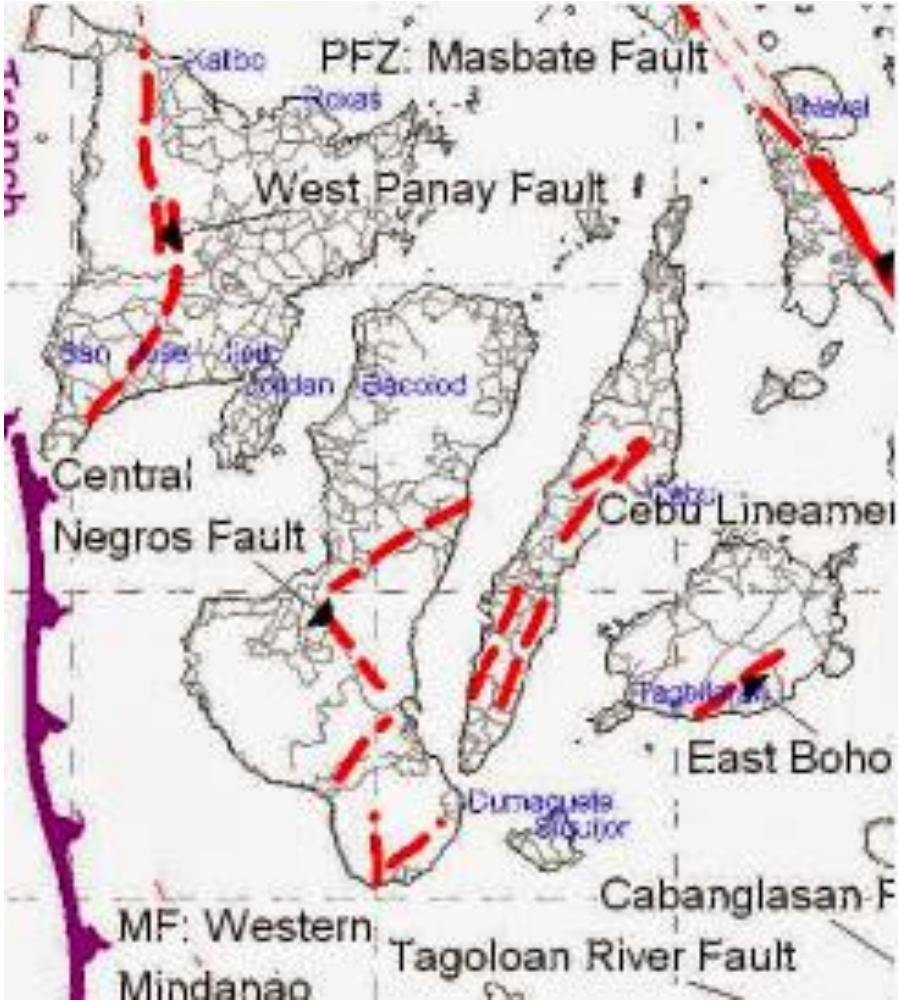

Distribution of Active Faults and Trenches in Bohol Island

Damaged Infrastructure

Liquefaction

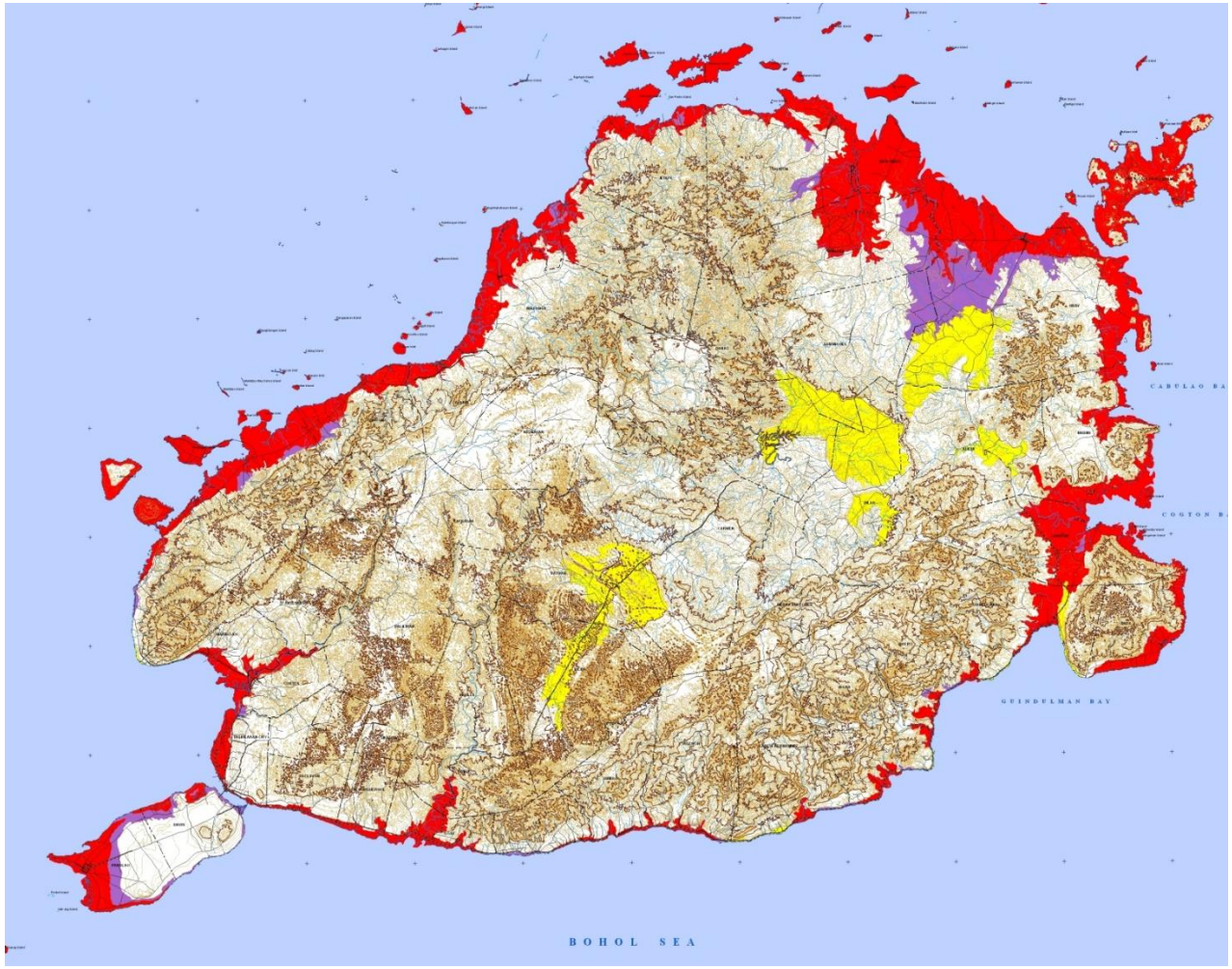

Liquefaction Hazard Map of Bohol Island

Anislag Bridge

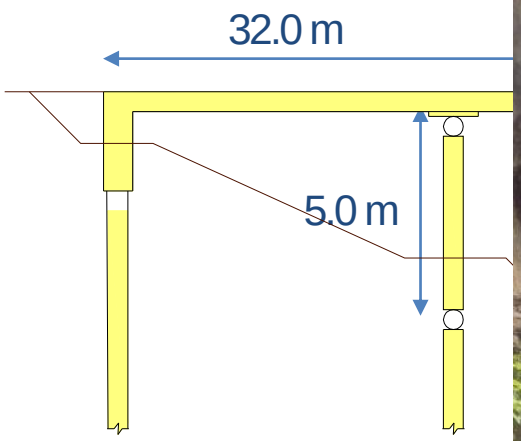

- *Deck Type: Flat slab continuous frame*
- *Pier head fixity: Pinned*
- *Abutment Type: Close End, Monolithic*
- *Abutment Shear Components: Wing walls*
- *Transverse shear keys: No*

- *Pier heads pinned or slightly fixed to the deck.*
- *Pier feet, based on standard drawings, pinned to the piles.*
- *Columns did not show enough rigidity in longitudinal* direction.

Approach Embankment

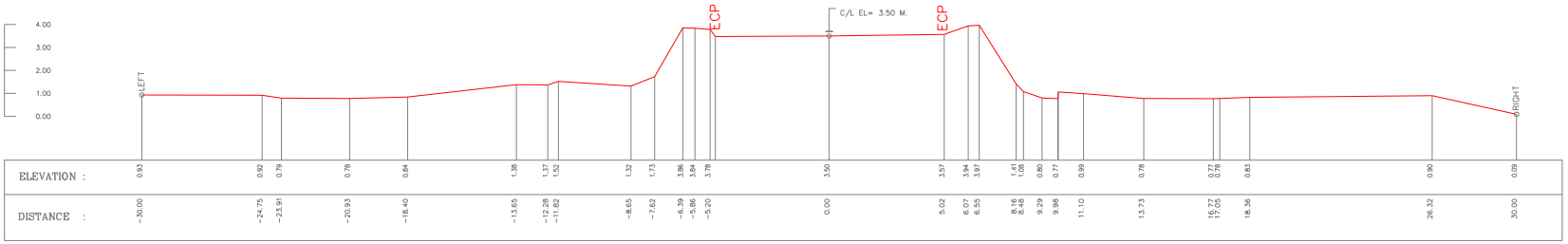

82+880

Western Approach

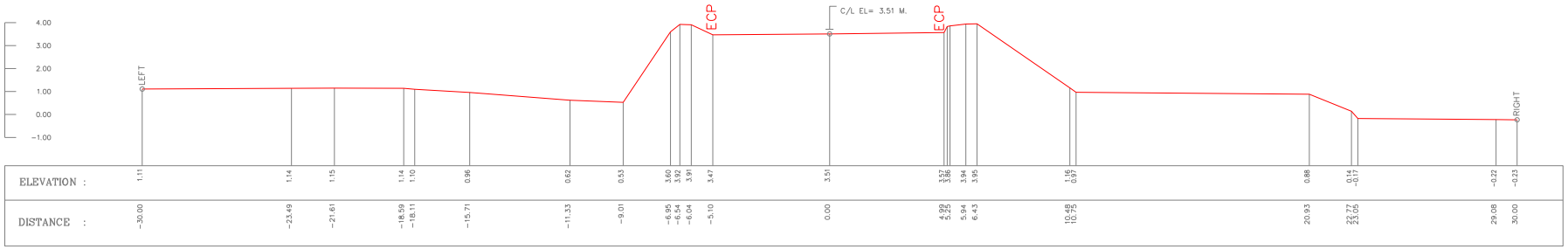

82+940

Eastern Approach

SUB-STRUCTURE / BACKFILL

Subsidence of the road embankment

Settlement of road rail post

- *Backfill has had severe settlement*
- *The backfill soil did not have the required engineering properties and compaction.*
- *Gravel backfill filter, necessary to facilitate drainage behind the walls is missing.*

- *Backfill has not been able to support the superstructure against the excitations.*
- *The abutment has not have enough shear components in longitudinal direction.*
- *There wasn't efficient drainage in the backfill.*

Abutment & Piers

New Design

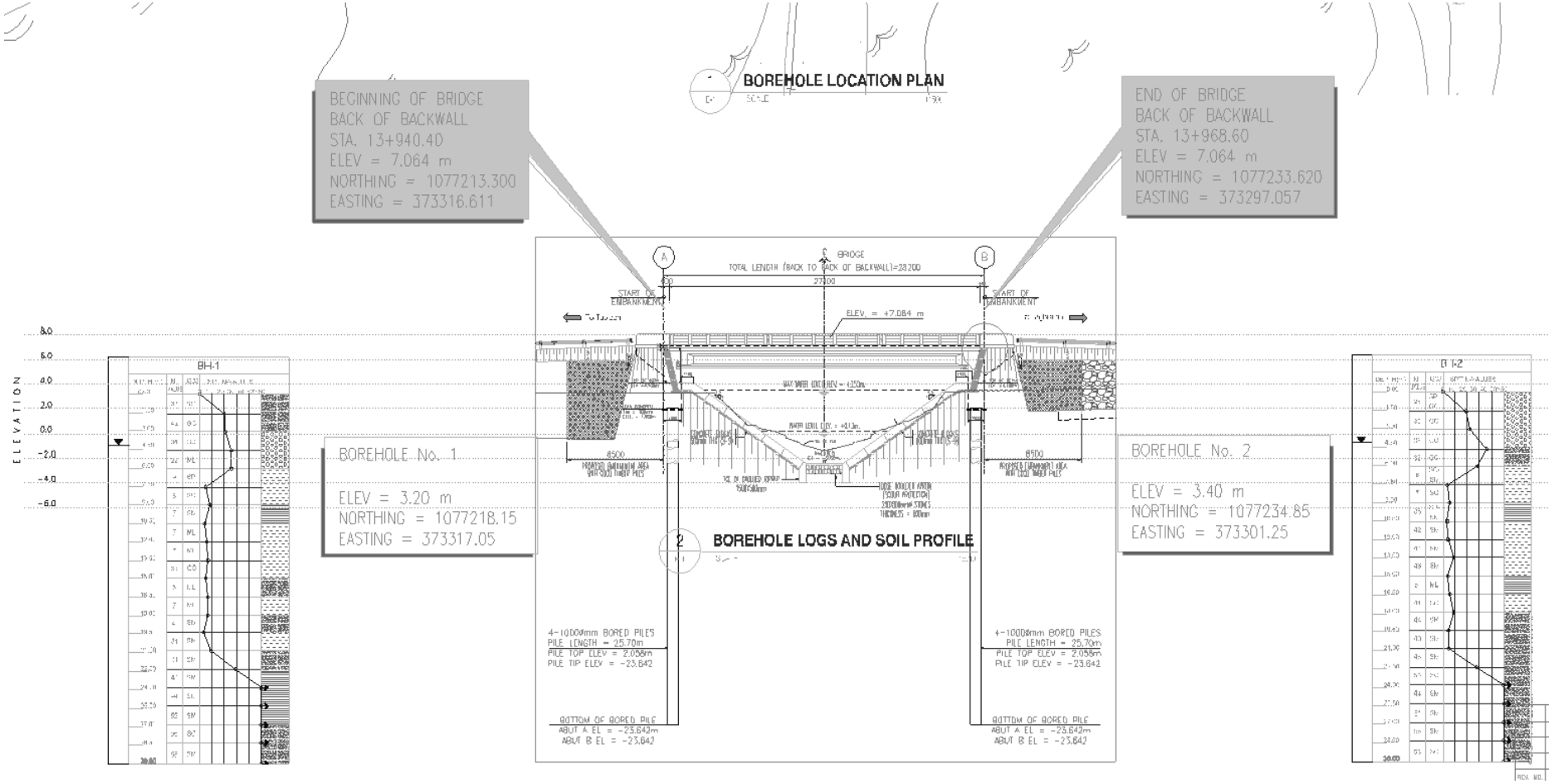

Single Span, integral Abutment Bridge

New Design

- AASHTO Girders
- Integral Abutment
- Single Row of Piles
- 4 piles D1.0m
- Pile Length 25.0m
- Approach Slab 5.0m
- Liquefaction Protection…

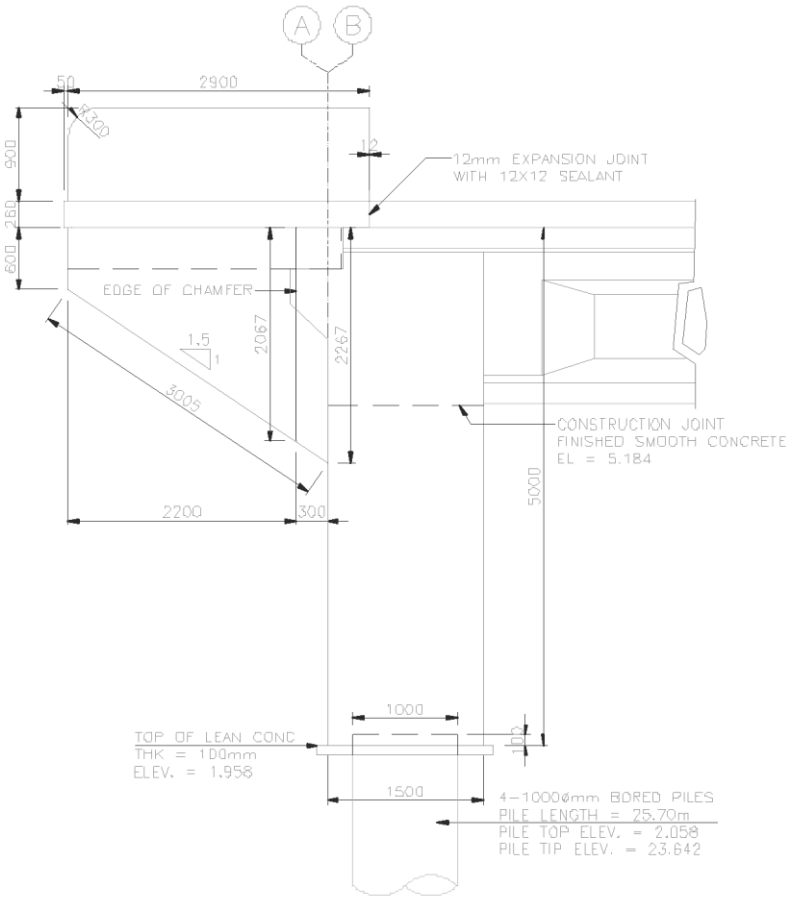

Pile Net System (パイルネット)

Timber Pile Net [昭和マテリアル]

Sources of Coconut Timber

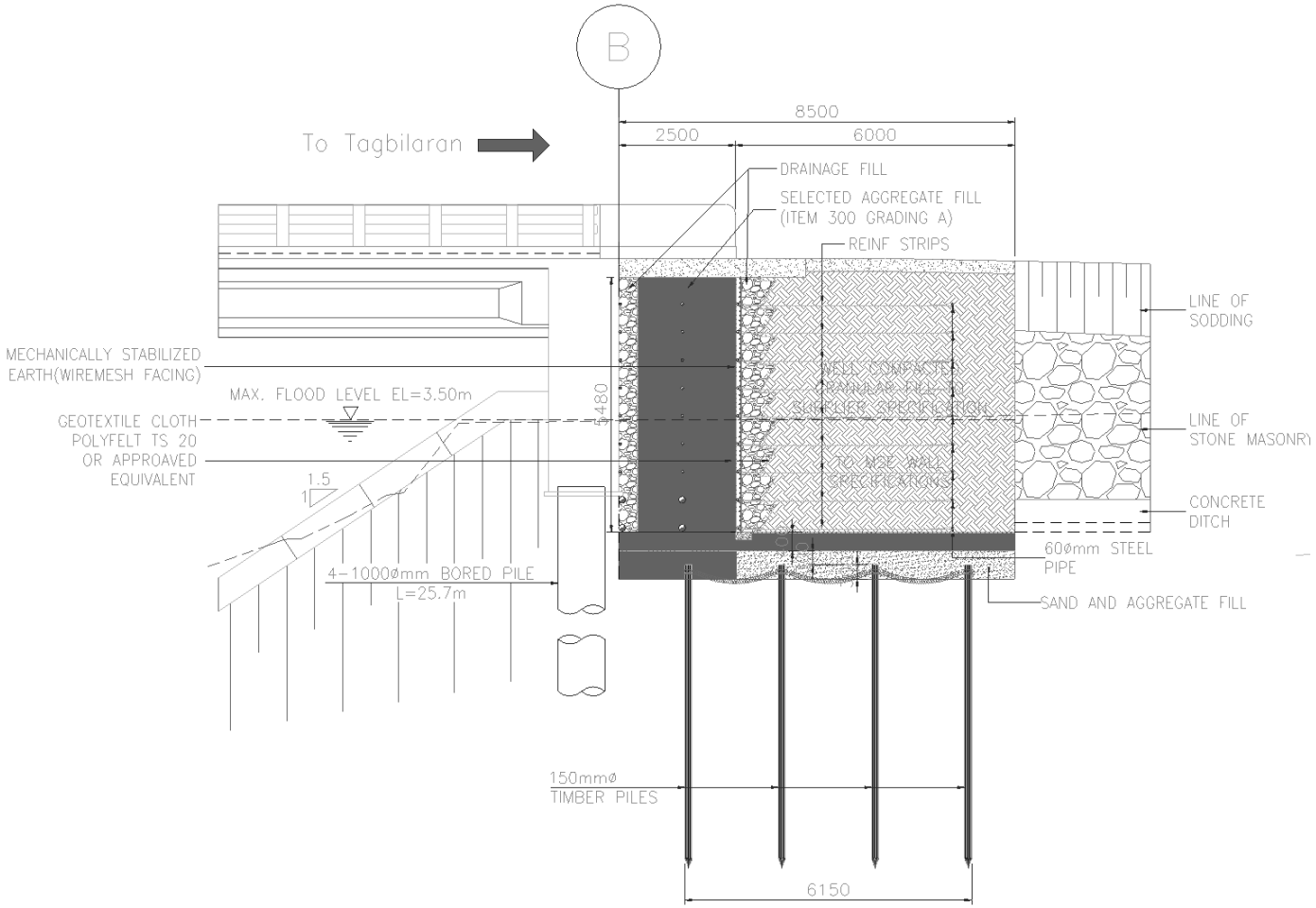

Elevation of the New Abutment

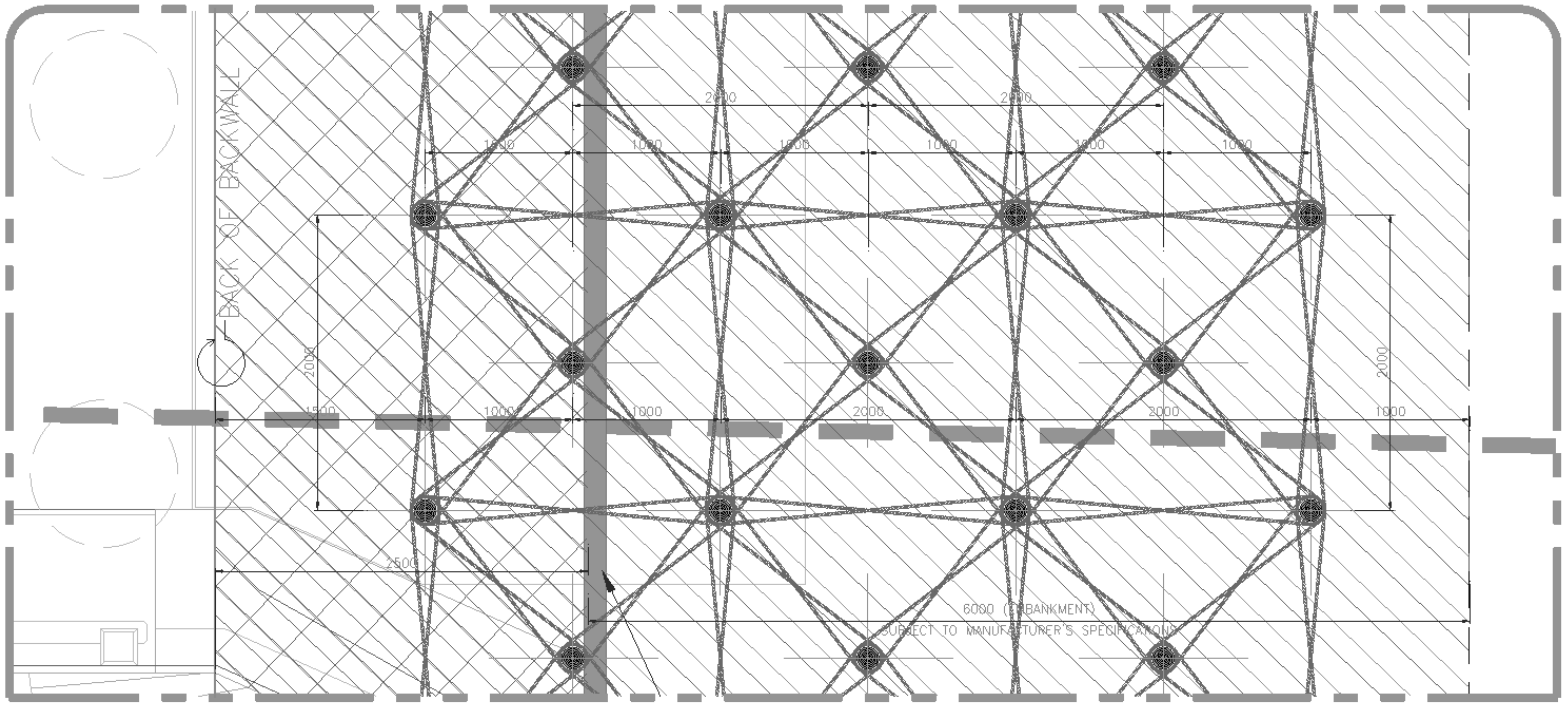

Plan of Timber Pile Net

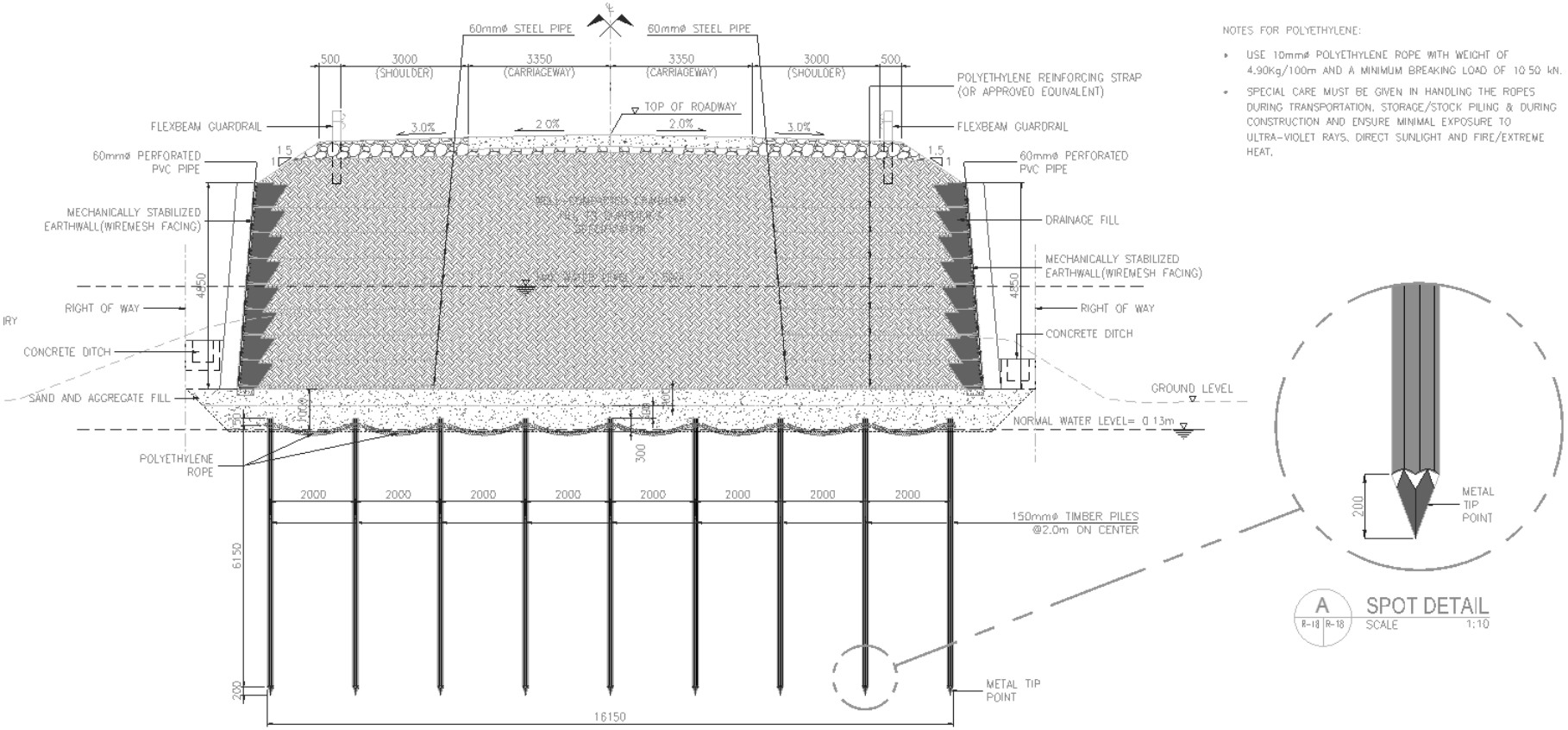

Section of the New Abutment

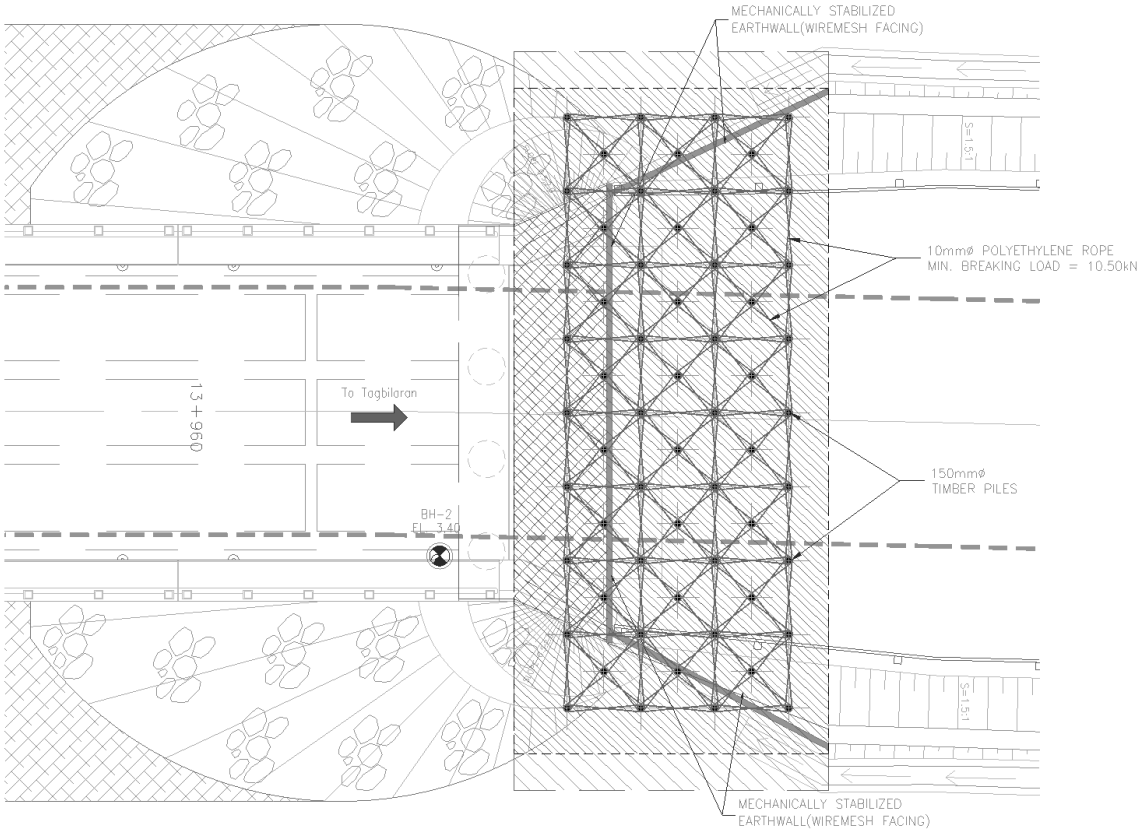

Final Arrangement of the Abutment

Numerical Simulation

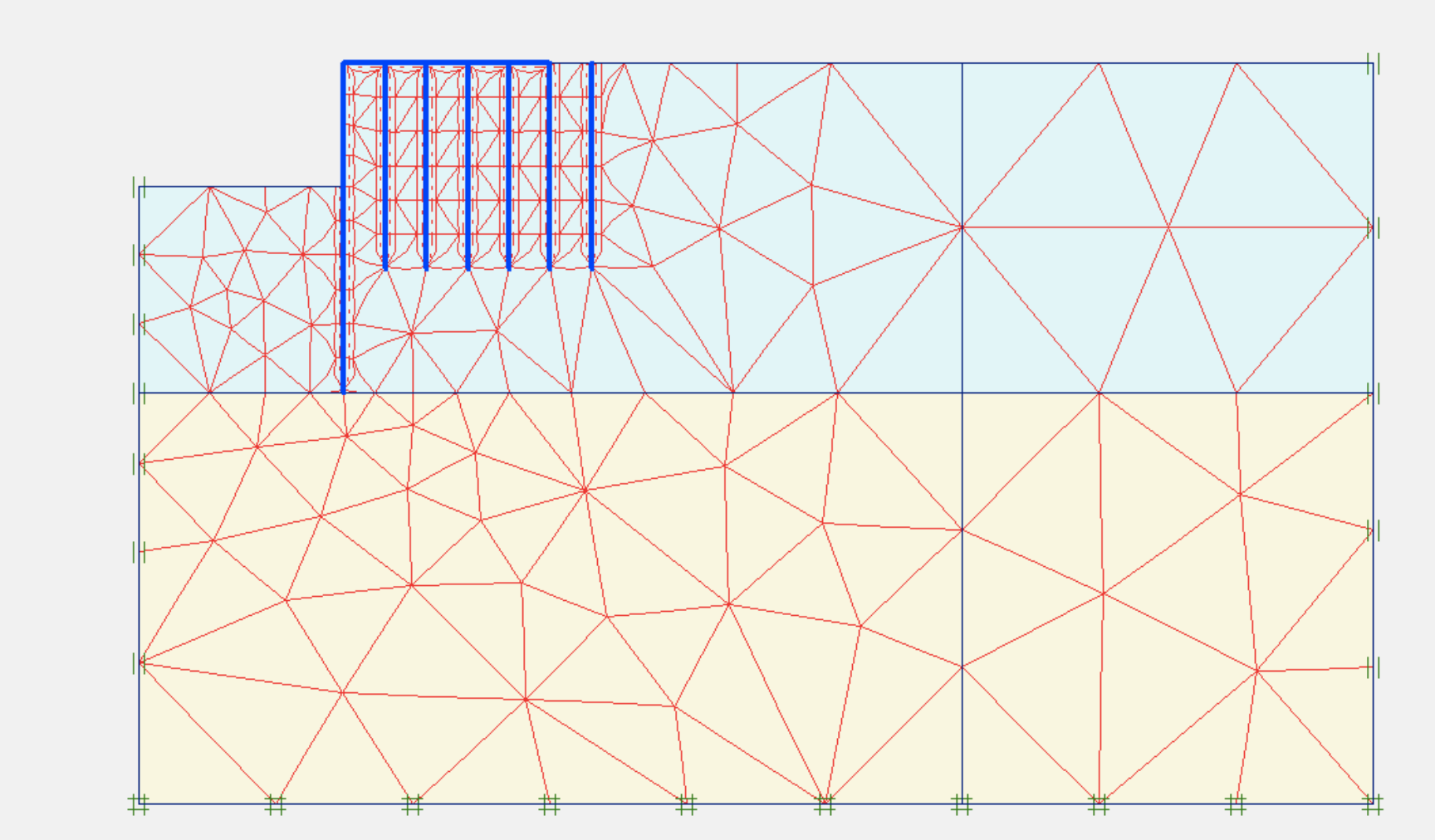

Finite Element Model

Usage of Timber Piles is because it is:

Natural
Timber is one of the few natural building material. This has a lot of advantages. Generally, timber is not toxic, does not leak chemical vapor into the environment and is safe to handle and touch. It also means that as timber ages, it does so naturally and doesn't break down into environmentally damaging materials.

Renewable
Timber has been used for structures for thousands of years. Timber is continually being grown in our forests and plantations. As long as new trees are planted to replace those harvested, timber will continue to be available.

Low in production energy
It takes very little energy to convert the wood in trees to the timber used in structures. This means that the embodied energy in timber is very low, the lowest of almost all common building materials.

A store for carbon
Timber is made from carbon drawn from the atmosphere. This carbon would otherwise be adding to the greenhouse effect. Using timber in buildings stores the carbon for as long as the building stands or the timber is used.

Readily available
Timber is milled all over many places of the world and is often used close to where it is produced. This promotes local economies and reduces the energy needed to transport materials long distances.

Easy to work
Timber is versatile and can be used in a wide variety of ways. Being light, it is easy to install and can be worked with simple equipment. This reduces the energy needed for construction.

Thanks for Your Attention!