Relion® 615 Series

Feeder Protection and Control REF615 ANSI

Application Manual

Power and productivity
for a better world™

Document ID: 1MAC109554-MB
Issued: 3/7/2011
Revision: D
Product version: 4.0

Copyright

Trademarks

ABB and Relion are registered trademarks of ABB Group. All other brand or product names mentioned in this document may be trademarks or registered trademarks of their respective holders.

Warranty

Please inquire about the terms of warranty from your nearest ABB representative.

ABB Inc.
Distribution Automation
4300 Coral Ridge Drive
Coral Springs, FL 33065, USA
Toll-free: 1 (800) 523-2620
Phone: +1 954-752-6700
Fax: +1 954 345-5329
http://www.abb.com/substationautomation

Disclaimer

The data, examples and diagrams in this manual are included solely for the concept or product description and are not to be deemed as a statement of guaranteed properties. All persons responsible for applying the equipment addressed in this manual must satisfy themselves that each intended application is suitable and acceptable, including that any applicable safety or other operational requirements are complied with. In particular, any risks in applications where a system failure and/or product failure would create a risk for harm to property or persons (including but not limited to personal injuries or death) shall be the sole responsibility of the person or entity applying the equipment, and those so responsible are hereby requested to ensure that all measures are taken to exclude or mitigate such risks.

This document has been carefully checked by ABB but deviations cannot be completely ruled out. In case any errors are detected, the reader is kindly requested to notify the manufacturer. Other than under explicit contractual commitments, in no event shall ABB be responsible or liable for any loss or damage resulting from the use of this manual or the application of the equipment.

Conformity

This product complies with the directive of the Council of the European Communities on the approximation of the laws of the Member States relating to electromagnetic compatibility (EMC Directive 2004/108/EC) and concerning electrical equipment for use within specified voltage limits (Low-voltage directive 2006/95/EC). This conformity is the result of tests conducted by ABB in accordance with the product standards EN 50263 and EN 60255-26 for the EMC directive, and with the product standards EN 60255-6 and EN 60255-27 for the low voltage directive. The IED is designed in accordance with the international standards of the IEC 60255 series and ANSI C37.90. This IED complies with the UL 508 certification.

Section 1 Introduction

1.1 This manual

The application manual contains application descriptions and setting guidelines sorted per function. The manual can be used to find out when and for what purpose a typical protection function can be used. The manual can also be used when calculating settings.

1.2 Intended audience

This manual addresses the protection and control engineer responsible for planning, pre-engineering and engineering.

The protection and control engineer must be experienced in electrical power engineering and have knowledge of related technology, such as communication and protocols.

1.3 Product documentation

1.3.1 Product documentation set

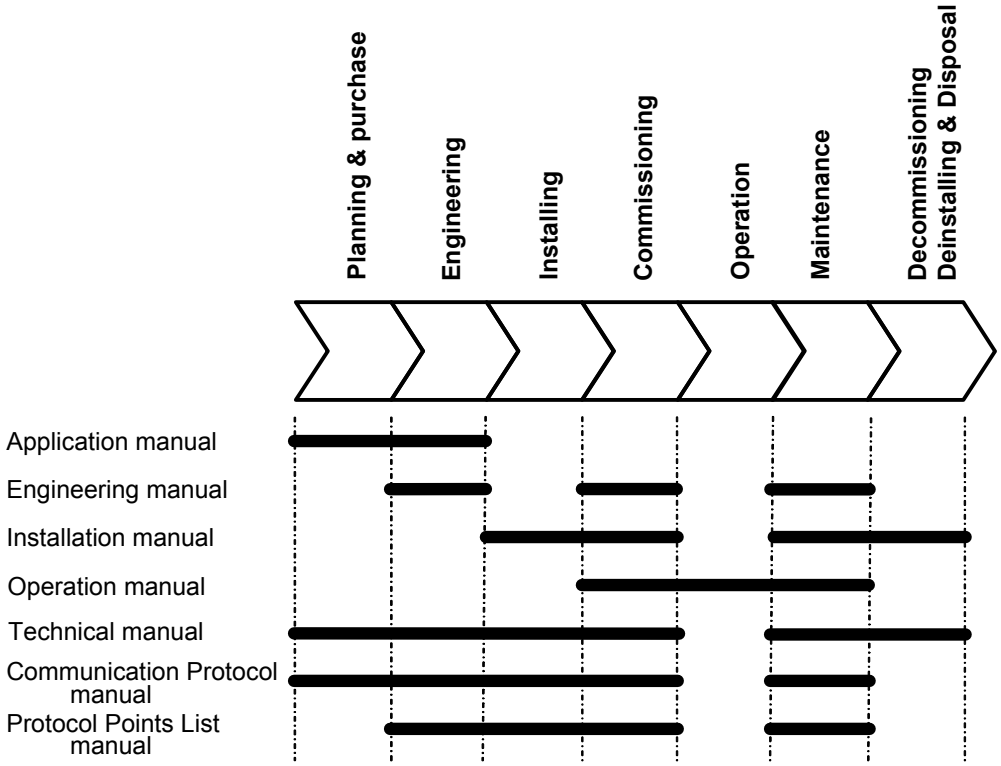

Figure 1: The intended use of manuals in different life cycles

The engineering manual contains instructions on how to engineer the IEDs using the different tools in PCM600. The manual provides instructions on how to set up a PCM600 project and insert IEDs to the project structure. The manual also recommends a sequence for engineering of protection and control functions, LHMI functions as well as communication engineering for IEC 61850 and DNP3.

The installation manual contains instructions on how to install the IED. The manual provides procedures for mechanical and electrical installation. The chapters are organized in chronological order in which the IED should be installed.

The operation manual contains instructions on how to operate the IED once it has been commissioned. The manual provides instructions for monitoring, controlling and setting the IED. The manual also describes how to identify disturbances and how to view calculated and measured power grid data to determine the cause of a fault.

The application manual contains application descriptions and setting guidelines sorted per function. The manual can be used to find out when and for what purpose a typical protection function can be used. The manual can also be used when calculating settings.

The technical manual contains application and functionality descriptions and lists function blocks, logic diagrams, input and output signals, setting parameters and technical data

sorted per function. The manual can be used as a technical reference during the engineering phase, installation and commissioning phase, and during normal service.

The communication protocol manual describes a communication protocol supported by the IED. The manual concentrates on vendor-specific implementations. The point list manual describes the outlook and properties of the data points specific to the IED. The manual should be used in conjunction with the corresponding communication protocol manual.

1.3.2 Document revision history

Document revision/date	Product version	History
A/03/28/2008	1.0.1	First release
B/12/22/2008	1.1	Content updated to correspond to the product version
C/01/20/2010	2.0	Content updated to correspond to the product version
D/12/31/2010	4.0	Content updated to correspond to the product version

Download the latest documents from the ABB web site http://www.abb.com/substation automation.

1.3.3 Related documentation

Name of the document	Document ID
Modbus Communication Protocol Manual	1MAC052634-MB
DNP3 Communication Protocol Manual	1MAC052460-MB
IEC 61850 Engineering Guide	1MAC106231-MB
Installation Manual	1MAC051065-MB
Operation Manual	1MAC050592-MB
Technical Manual	1MAC050144-MB

1.4 Symbols and conventions

1.4.1 Safety indication symbols

The electrical warning icon indicates the presence of a hazard which could result in electrical shock.

The warning icon indicates the presence of a hazard which could result in personal injury.

The caution icon indicates important information or warning related to the concept discussed in the text. It might indicate the presence of a hazard which could result in corruption of software or damage to equipment or property.

The information icon alerts the reader to important facts and conditions.

The tip icon indicates advice on, for example, how to design your project or how to use a certain function.

Although warning hazards are related to personal injury, it should be understood that operation of damaged equipment could, under certain operational conditions, result in degraded process performance leading to personal injury or death. Therefore, comply fully with all warning and caution notices.

1.4.2 Manual conventions

Conventions used in IED manuals. A particular convention may not be used in this manual.

- Abbreviations and acronyms in this manual are spelled out in the glossary. The glossary also contains definitions of important terms.
- Push button navigation in the LHMI menu structure is presented by using the push button icons, for example:

  To navigate between the options, use ↑ and ↓.
- HMI menu paths are presented in bold, for example:

  Select **Main menu > Settings**.
- LHMI messages are shown in Courier font, for example:

  To save the changes in non-volatile memory, select `Yes` and press ↵.
- Parameter names are shown in italics, for example:

  The function can be enabled and disabled with the *Operation* setting.
- Parameter values are indicated with quotation marks, for example:

  The corresponding parameter values are "Enabled" and "Disabled".
- IED input/output messages and monitored data names are shown in Courier font, for example:

  When the function picks up, the `PICKUP` output is set to TRUE.
- Dimensions are provided both in inches and mm. If it is not specifically mentioned then the dimension is in mm.

1.4.3 Functions, codes and symbols

All available functions are listed in the table. All of them may not be applicable to all products.

Table 1: Functions included in standard configurations

Function	IEC61850	ANSI/C37.2	IEC60617
Protection			
Three-phase non-directional overcurrent protection, low stage, instance 1	PHLPTOC1	51P-1	3I> (1)
Three-phase non-directional overcurrent protection, low stage, instance 2	PHLPTOC2	51P-2	3I> (2)
Three-phase non-directional overcurrent protection, high stage, instance 1	PHHPTOC1	50P-1	3I>> (1)
Three-phase non-directional overcurrent protection, high stage, instance 2	PHHPTOC2	50P-2	3I>> (2)
Three-phase non-directional overcurrent protection, high stage, instance 3	PHHPTOC3	50P-4	3I>> (3)
Three-phase non-directional overcurrent protection, high stage, instance 4	PHHPTOC4	50P-5	3I>> (4)
Three-phase non-directional overcurrent protection, instantaneous stage, instance 1	PHIPTOC1	50P-3	3I>>> (1)
Three-phase non-directional long time overcurrent protection, low stage, instance 1	PHLTPTOC1	51LT	3I> (3)
Three-phase directional overcurrent protection, low stage, instance 1	DPHLPDOC1	67/51P	3I> -> (1)
Three-phase directional overcurrent protection, high stage, instance 1	DPHHPDOC1	67/50P-1	3I>> -> (1)
Three-phase directional overcurrent protection, high stage, instance 2	DPHHPDOC2	67/50P-2	3I>> -> (2)
Non-directional ground-fault protection, low stage, instance 1	EFLPTOC1	51G	Io> (1)
Non-directional ground-fault protection, low stage, instance 2	EFLPTOC2	51N-1	Io> (2)
Non-directional ground-fault protection, low stage, instance 3	EFLPTOC3	51N-2	Io> (3)
Non-directional ground-fault protection, low stage, instance 4	EFLPTOC4	50SEF	Io> (4)
Non-directional ground-fault protection, high stage, instance 1	EFHPTOC1	50G-1	Io>> (1)
Non-directional ground-fault protection, high stage, instance 2	EFHPTOC2	50G-2	Io>> (2)
Non-directional ground-fault protection, high stage, instance 3	EFHPTOC3	50N-1	Io>> (3)
Non-directional ground-fault protection, high stage, instance 4	EFHPTOC4	50N-2	Io>> (4)
Non-directional ground-fault protection, high stage, instance 5	EFHPTOC5	50N-4	Io>> (5)
Non-directional ground-fault protection, high stage, instance 6	EFHPTOC6	50N-5	Io>> (6)
Non-directional ground-fault protection, instantaneous stage, instance 1	EFIPTOC1	50G-3	Io>>> (1)

Function	IEC61850	ANSI/C37.2	IEC60617
Non-directional ground-fault protection, instantaneous stage, instance 2	EFIPTOC2	50N-3	Io>>> (2)
Directional ground-fault protection, low stage, instance 1	DEFLPDEF1	67/51N	Io> -> (1)
Directional ground-fault protection, high stage, instance 1	DEFHPDEF1	67/50N-1	Io>> -> (1)
Directional ground-fault protection, high stage, instance 2	DEFHPDEF2	67/50N-2	Io>> -> (2)
Three phase directional power protection, instance 1	DPSRDIR1	32P-1	I1-> (1)
Three phase directional power protection, instance 2	DPSRDIR2	32P-2	I1-> (2)
Ground directional power protection, instance 1	DNZSRDIR1	32N-1	I2 ->, Io-> (1)
Ground directional power protection, instance 2	DNZSRDIR2	32N-2	I2 ->, Io-> (2)
Negative-sequence overcurrent protection, instance 1	NSPTOC1	46-1	I2> (1)
Negative-sequence overcurrent protection, instance 2	NSPTOC2	46-2	I2> (2)
Phase discontinuity protection	PDNSPTOC1	46PD	I2/I1>
Residual overvoltage protection, instance 1	ROVPTOV1	59G	Uo> (1)
Residual overvoltage protection, instance 2	ROVPTOV2	59N-1	Uo> (2)
Residual overvoltage protection, instance 3	ROVPTOV3	59N-2	Uo> (3)
Three-phase undervoltage protection, instance 1	PHPTUV1	27-1	3U< (1)
Three-phase undervoltage protection, instance 2	PHPTUV2	27-2	3U< (2)
Three-phase overvoltage protection, instance 1	PHPTOV1	59-1	3U> (1)
Three-phase overvoltage protection, instance 2	PHPTOV2	59-2	3U> (2)
Negative-sequence overvoltage protection, instance 1	NSPTOV1	47-1	U2> (1)
Negative-sequence overvoltage protection, instance 2	NSPTOV2	47-2	U2> (2)
Frequency protection, instance 1	FRPFRQ1	81-1	f>/f<,df/dt (1)
Frequency protection, instance 2	FRPFRQ2	81-2	f>/f<,df/dt (2)
Voltage per hertz protection, instance 1	OEPVPH1	24	U/f> (1)
Three-phase thermal protection for feeders, cables and distribution transformers, Instance 1	T1PTTR1	49F-1	3Ith>F (1)
Three-phase thermal protection for feeders, cables and distribution transformers, Instance 2	T1PTTR2	49F-2	3Ith>F (2)
Numerical stabilized low impedance restricted ground-fault protection	LREFPNDF1	87LOZREF	dIoLo>
Circuit breaker failure protection, instance 1	CCBRBRF1	50BF-1	3I>/Io>BF (1)
Circuit breaker failure protection, instance 2	CCBRBRF2	50BF-2	3I>/Io>BF (2)
Three-phase inrush detector, instance 1	INRPHAR1	INR-1	3I2f> (1)
Three-phase inrush detector, instance 2	INRPHAR2	INR-2	3I2f> (2)

Function	IEC61850	ANSI/C37.2	IEC60617
Master trip, instance 1	TRPPTRC1	86/94-1	Master Trip (1)
Master trip, instance 2	TRPPTRC2	86/94-2	Master Trip (2)
Arc protection, instance 1	ARCSARC1	AFD-1	ARC (1)
Arc protection, instance 2	ARCSARC2	AFD-2	ARC (2)
Arc protection, instance 3	ARCSARC3	AFD-3	ARC (3)
High impedance fault detection	PHIZ1	HIZ	PHIZ1
Load shedding and restoration, instance 1	LSHDPFRQ1	81LSH-1	UFLS/R (1)
Load shedding and restoration, instance 2	LSHDPFRQ2	81LSH-2	UFLS/R (2)
Loss of phase, instance 1	PHPTUC1	37-1	3I< (1)
Loss of phase, instance 2	PHPTUC2	37-2	3I< (2)
Control			
Circuit-breaker control, instance 1	CBXCBR1	52-1	I <-> O CB (1)
Circuit-breaker control, instance 2	CBXCBR2	52-2	I <-> O CB (2)
Auto-reclosing	DARREC1	79	O -> I
Synchronism and energizing check	SECRSYN1	25	SYNC
Condition Monitoring			
Circuit-breaker condition monitoring, instance 1	SSCBR1	52CM-1	CBCM (1)
Circuit-breaker condition monitoring, instance 2	SSCBR2	52CM-2	CBCM (2)
Trip circuit supervision, instance 1	TCSSCBR1	TCM-1	TCS (1)
Trip circuit supervision, instance 2	TCSSCBR2	TCM-2	TCS (2)
Current circuit supervision	CCRDIF1	CCM	MCS 3I
Fuse failure supervision, instance 1	SEQRFUF1	60-1	FUSEF (1)
Fuse failure supervision, instance 2	SEQRFUF2	60-2	FUSEF (2)
Cable fault detection	RCFD1	CFD	RCFD1
Measurement			
Three-phase current measurement, instance 1	CMMXU1	IA, IB, IC	3I
Three-phase current measurement, instance 2	CMMXU2	IA, IB, IC (2)	3I(B)
Sequence current measurement, instance 1	CSMSQI1	I1, I2, I0	I1, I2, I0
Sequence current measurement, instance 2	CSMSQI2	I1, I2, I0 (2)	I1, I2, I0(B)
Residual current measurement, instance 1	RESCMMXU1	IG	Io
Three-phase voltage measurement, instance 1	VMMXU1	VA, VB, VC	3U
Three-phase voltage measurement, instance 2	VMMXU2	VA, VB, VC (2)	3U(B)

Function	IEC61850	ANSI/C37.2	IEC60617
Residual voltage measurement	RESVMMXU1	VG	Uo
Sequence voltage measurement, instance 1	VSMSQI1	V1, V2, V0	U1, U2, U0
Sequence voltage measurement, instance 2	VSMSQI2	V1, V2, V0 (2)	U1, U2, U0(B)
Single-phase power and energy measurement, instance 1	SPEMMXU1	SP, SE-1	SP, SE
Single-phase power and energy measurement, instance 2	SPEMMXU2	SP, SE-2	SP, SE(B)
Three-phase power and energy measurement, instance 1	PEMMXU1	P, E-1	P, E
Three-phase power and energy measurement, instance 2	PEMMXU2	P, E-2	P, E(B)
Current total demand distortion, instance 1	CMHAI1	PQI-1	PQM3I
Current total demand distortion, instance 2	CMHAI2	PQI-2	PQM3I(B)
Voltage total harmonic distortion, instance 1	VMHAI1	PQVPH-1	PQM3U
Voltage total harmonic distortion, instance 2	VMHAI2	PQVPH-2	PQM3U(B)
Voltage variation, instance 1	PHQVVR1	PQSS-1	PQ 3U<>
Voltage variation, instance 2	PHQVVR2	PQSS-2	PQ 3U<>(B)
Load profile	LDPMSTA1	LoadProf	-
Frequency measurement	FMMXU1	f	f
Recorder			
Disturbance recorder	RDRE1	DFR	-
Fault recorder	FLTMSTA1	FR	-
Sequence event recorder	SER	SER	-
Other Functions			
Minimum pulse timer (2 pcs), instance 1	TPGAPC1	TP 1	TP (1)
Minimum pulse timer (2 pcs), instance 2	TPGAPC2	TP 2	TP (2)
Minimum pulse timer (2 pcs), instance 3	TPGAPC3	TP 3	TP (3)
Minimum pulse timer (2 pcs), instance 4	TPGAPC4	TP 4	TP (4)
Minimum pulse timer (2 pcs, second resolution), instance 1	TPSGAPC1	62CLD-1	TPS (1)
Minimum pulse timer (2 pcs, second resolution), instance 2	TPSGAPC2	62CLD-3	TPS (2)
Minimum pulse timer (2 pcs, minute resolution), instance 1	TPMGAPC1	62CLD-2	TPM (1)
Minimum pulse timer (2 pcs, minute resolution), instance 2	TPMGAPC2	62CLD-4	TPM (2)
Pulse timer (8 pcs), instance 1	PTGAPC1	PT-1	PT (1)
Pulse timer (8 pcs), instance 2	PTGAPC2	PT-2	PT (2)
Time delay off (8 pcs), instance 1	TOFGAPC1	TOF-1	TOF (1)
Time delay off (8 pcs), instance 2	TOFGAPC2	TOF-2	TOF (2)
Time delay on (8 pcs), instance 1	TONGAPC1	TON -1	TON (1)

Function	IEC61850	ANSI/C37.2	IEC60617
Time delay on (8 pcs), instance 2	TONGAPC2	TON -2	TON (2)
Set reset (8 pcs), instance 1	SRGAPC1	SR-1	SR (1)
Set reset (8 pcs), instance 2	SRGAPC2	SR-2	SR (2)
Move (8 pcs), instance 1	MVGAPC1	MV-1	MV (1)
Move (8 pcs), instance 2	MVGAPC2	MV-2	MV (2)

Section 2 REF615 overview

2.1 Overview

REF615 is a dedicated feeder IED (intelligent electronic device) designed for the protection, control, measurement and supervision of utility substations and industrial power systems. REF615 is a member of ABB's Relion® product family and part of its 615 protection and control product series. The 615 series IEDs are characterized by their compactness and withdrawable design.

Re-engineered from the ground up, the 615 series has been designed to unleash the full potential of the IEC 61850 standard for communication and interoperability between substation automation devices.

The IED provides main protection for overhead lines and cable feeders in distribution networks. The IED is also used as back-up protection in applications, where an independent and redundant protection system is required.

Depending on the chosen standard configuration, the IED is adapted for the protection of overhead line and cable feeders in isolated neutral, resistance grounded, compensated and solidly grounded networks. Once the standard configuration IED has been given the application-specific settings, it can directly be put into service.

The 615 series IEDs support a range of communication protocols including IEC 61850 with GOOSE messaging, IEC 60870-5-103, Modbus® and DNP3.

2.1.1 Product version history

Product version	Product history
1.0.1	Product released
1.1	• Circuit breaker condition monitoring • Replaced EFIPTOC3 with EFLPTOC3 • New communication modules COMB11A, COMB12A, COMB13A and COMB14A • IRIG-B • CB interlocking functionality enhanced • TCS functionality in HW enhanced • Non-volatile memory added • Serial communications
2.0	• Support for DNP3 serial or TCP/IP • Voltage measurement and protection • Power and energy measurement • Disturbance recorder upload via WHMI • Fuse failure supervision
4.0	• "User programming through Application Configuration tool • "Frequency measurement protection • "Load shedding and restoration • "Single phase power and energy measurement • "Load profile recorder

2.1.2 PCM600 and IED connectivity package version

- Protection and Control IED Manager PCM600 2.3 (plus PCM600 Rollup 20110126 2.3) or later
- IED Connectivity Package REF615 Ver. 4.0 ANSI
  - Parameter Setting
  - Application Configuration
  - Firmware Update
  - Disturbance Handling
  - Signal Monitoring
  - Lifecycle Traceability
  - Signal Matrix
  - Communication Management
  - Configuration Wizard
  - Label Printing
  - IED User Management
  - IED Users

Download connectivity packages from the ABB web site
http://www.abb.com/substationautomation

2.2 Operation functionality

2.2.1 Optional features

- High speed BIO cards
  - The regular binary cards (8BI+4BO) can be replaced with optional binary cards with high speed output (8BI+3HSO). These cards will be replaced at the X110 slot.
- Additional BIOs, 6BI+3BO
  - Additional binary cards can be used if needed at the X130 slot (See table 2)

2.3 Physical hardware

The IED consists of two main parts: plug-in unit and case. The plug-in unit content depends on the ordered functionality.

Table 2: Plug-in unit and case

Main unit	Slot ID	Module ID	Content options	
Plug-in unit	-	DISxxxx	HMI	128/128 LCD large display with text and graphics)
	X100	PSMxxxx	Auxiliary power/BO module	48-250V DC/ 80-240V AC; or 24-60V DC 2 normally-open PO contacts 2 normally-closed SO contacts 2 double-pole PO contacts with TCS 1 dedicated internal fault output contact
	X110	BIOxxxx	BI/O module	Optional with configuration A, Part of standard configuration B, C, D, E 8 Binary Inputs 4 Binary Outputs Can be replaced with optional high-speed BIO card for all configurations. 8 Binary Inputs 3 High speed SO contacts
	X120	AIMxxxx	AI/BI module	With Configuration A and D, 4 Binary Inputs 4 Current Inputs with Io
				With Configuration B and E, 7 Current Inputs
				With Configuration C 3 Voltage Inputs 4 Current Inputs with Io
Case	X130	AIMxxxx	Optional BI/O module	With Configuration D, 4 Binary Outputs 5 Voltage Inputs
			AI/BI module	With Configuration E, 3 Binary Inputs 6 Voltage Inputs
				Optional BIO(6BI + 3BO) card can be used for other configurations
	X000		Optional communication module	See technical manual for details about different type of communication modules.

The rated input levels are selected in the IED software for phase current and ground current. The binary input thresholds 18...176 V DC are selected by adjusting the IED's parameter settings.

The optional BIO module can be added in the IED to all standard configurations.

The connection diagrams of different hardware modules are presented in this manual.

See the installation manual for more information about the case and the plug-in unit.

Table 3: Number of physical connections in standard configurations

Conf.	Analog channels		Binary channels	
	CT	VT	BI	BO
A	4	0	Min - 4 Max - 10	Min - 4 Max - 10
B	7	0	Min - 8 Max - 14	Min - 10 Max - 13
C	4	3	Min - 4 Max - 10	Min - 10 Max - 13
D	4	5	12	10
E	7	6	11	10

2.4 Local HMI

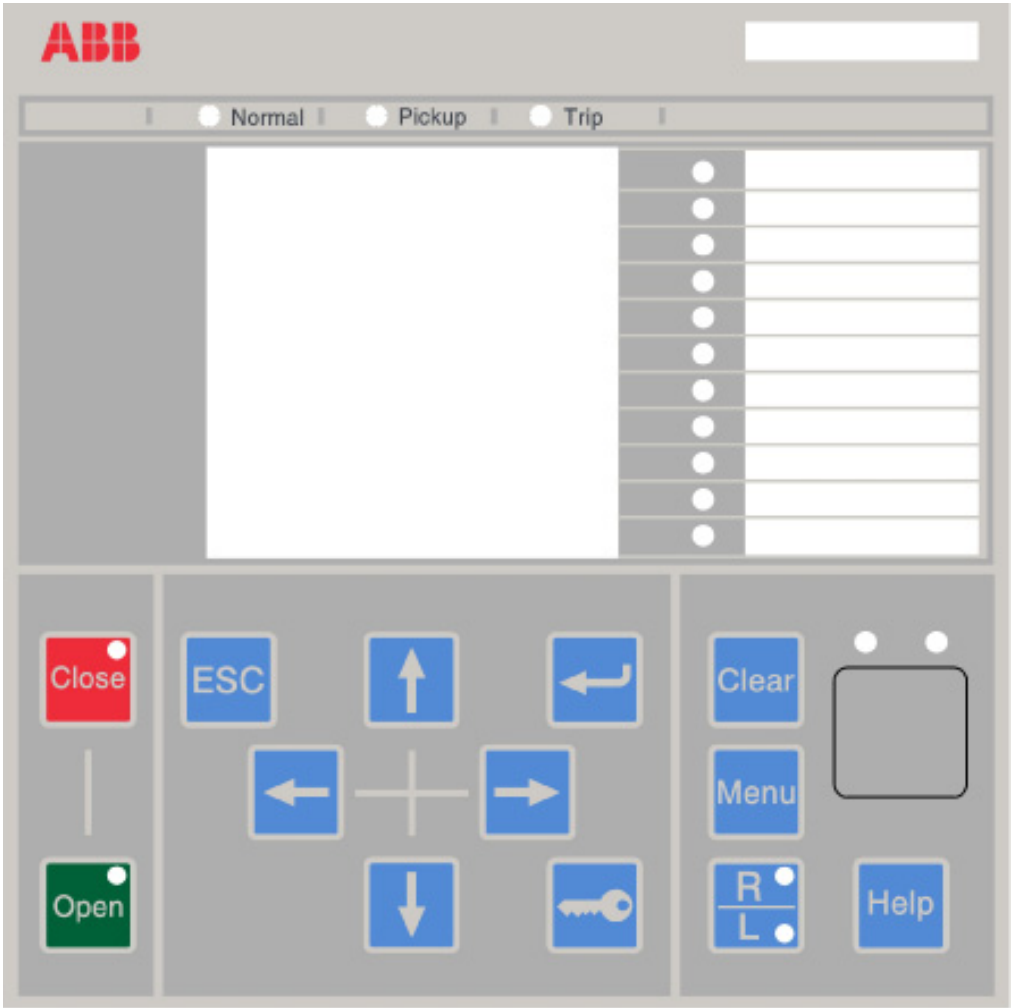

Figure 2: LHMI

The LHMI of the IED contains the following elements:

- Display
- Buttons
- LED indicators
- Communication port

The LHMI is used for setting, monitoring and controlling.

2.4.1 LCD

The LHMI includes a graphical LCD that supports two character sizes. The character size depends on the selected language.

Table 4: Characters and rows on the view

Character size	Rows in view	Characters on row
Large, variable width (13x14 pixels)	10 rows 8 rows with large screen	min 8

The display view is divided into four basic areas.

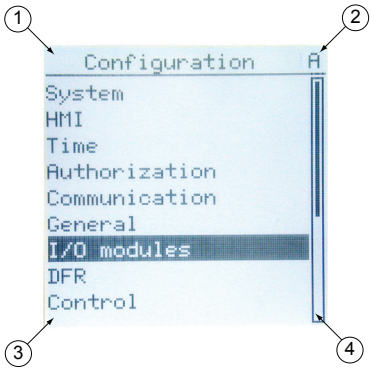

Figure 3: Display layout

1 Header

2 Icon

3 Content

4 Scroll bar (displayed when needed)

2.4.2 LEDs

The LHMI includes three protection indicators above the display: Normal, Pickup and Trip.

There are also 11 matrix programmable alarm LEDs on front of the LHMI. The LEDs can be configured with PCM600 and the operation mode can be selected with the LHMI, WHMI or PCM600.

e are two additional LEDs which are embedded into the control buttons 

and . They represent the status of the circuit breaker.

2.4.3 Keypad

The LHMI keypad contains push-buttons which are used to navigate in different views or menus. With the push-buttons you can give open or close commands to one primary object, for example, a circuit breaker, disconnector or switch. The push-buttons are also used to acknowledge alarms, reset indications, provide help and switch between local and remote control mode.

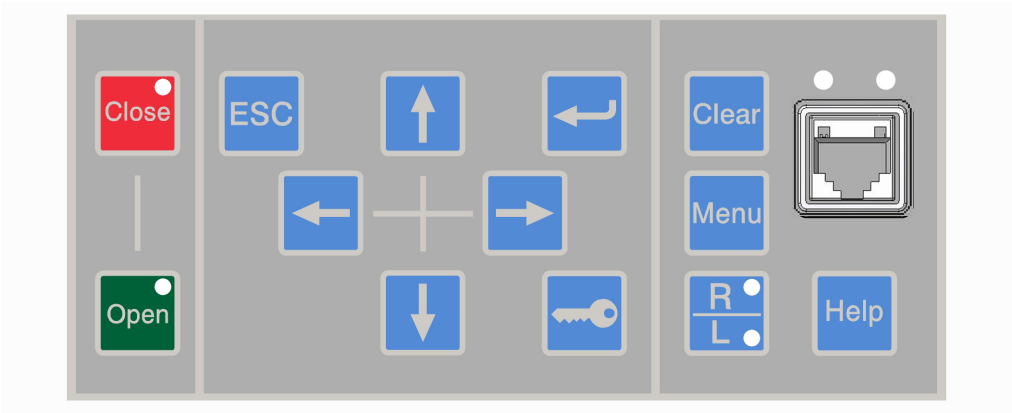

Figure 4: LHMI keypad with object control, navigation and command push-buttons and RJ-45 communication port

2.5 Web HMI

The WHMI enables the user to access the IED via a web browser. The supported web browser version is Internet Explorer 7.0 or later.

WHMI is enabled by default.

WHMI offers several functions.

- Alarm indications and event lists
- System supervision
- Parameter settings
- Measurement display
- Oscillographic records
- Phasor diagram

The menu tree structure on the WHMI is almost identical to the one on the LHMI.

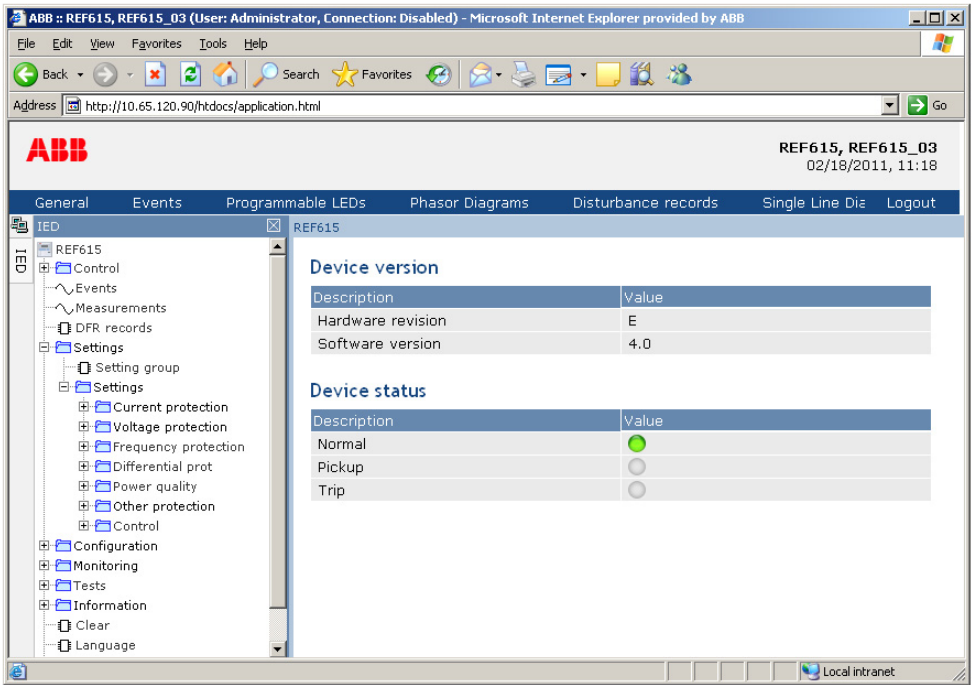

Figure 5: Example view of the WHMI

The WHMI can be accessed locally and remotely.

- Locally by connecting your laptop to the IED via the front communication port.
- Remotely over LAN/WAN.

2.6 Authorization

The user categories have been predefined for the LHMI and the WHMI, each with different rights and default passwords.

The default passwords can be changed with Administrator user rights.

User authorization is disabled by default but WHMI always uses authorization.

Table 5: Predefined user categories

User name	User rights
VIEWER	Read only access
OPERATOR	• Selecting remote or local state with (only locally) • Changing setting groups • Controlling • Clearing alarm and indication LEDs and textual indications
ENGINEER	• Changing settings • Clearing event list • Clearing DFRs • Changing system settings such as IP address, serial baud rate or DFR settings • Setting the IED to test mode • Selecting language
ADMINISTRATOR	• All listed above • Changing password • Factory default activation

For user authorization for PCM600, see PCM600 documentation.

2.7 Communication

The IED supports different communication protocols: IEC 61850, Modbus® and DNP 3.0 Level 2 - all using TCP/IP. DNP3 and Modbus also support serial communication. Operational information and controls are available through these protocols. However, some communication functionality, for example, horizontal peer-to-peer communication between the IEDs and parameters setting, is only enabled by the IEC 61850 communication protocol.

The IEC 61850 communication implementation supports all monitoring and control functions. Additionally, parameter setting and DFR records can be accessed using the IEC 61850 protocol. Oscillographic files are available to any Ethernet-based application in the standard COMTRADE format. Further, the IED can send and receive binary signals from other IEDs (so called horizontal communication) using the IEC61850-8-1 GOOSE profile, where the highest performance class with a total transmission time of 3 ms is supported. Also, the IED supports sending and receiving of analog values using GOOSE messaging. The IED meets the GOOSE performance requirements for tripping applications in distribution substations, as defined by the IEC 61850 standard. The IED can simultaneously report events to five different clients on the station bus.

All communication connectors, except for the front port connector, are placed on integrated optional communication modules. The IED can be connected to Ethernet-based communication systems via the RJ-45 connector (100BASE-TX) or the fiber-optic LC connector (100BASE-FX). An optional serial interface is available for RS-232/RS-485 communication.

Section 3 REF615 Configurations

3.1 REF615 variant list

REF615 is intended for protection and control mainly in MV feeder applications. The product has five standard configurations covering a wide range of primary circuit configurations in distribution networks based on different system grounding methods.

Some of the functions included in the IED's standard configurations are optional at the time of placing the order. The description of standard configurations covers the full functionality including options, presenting the functionality, flexibility and external connections of REF615 with a specific configuration as delivered from the factory.

3.2 Presentation of standard configurations

Functional diagrams

The functional diagrams describe the IED's functionality from the protection, measuring, condition monitoring, recording, control and interlocking perspective. Diagrams show the default functionality with simple symbol logics forming principle diagrams. The external connections to primary devices are also shown, stating the default connections to measuring transformers. The positive measuring direction is towards the outgoing feeder, away from the bus bar.

The functional diagrams are divided into sections with each section constituting one functional entity. The external connections are also divided into sections. Only the relevant connections for a particular functional entity are presented in each section.

Protection function blocks are part of the functional diagram. They are identified based on their ANSI function number/acronym, but the IEC based symbol and the IEC 61850 names are also included. Some function blocks are used several times in the configuration. To separate the blocks from each other, the IEC 61850 name and ANSI function number are appended with a running number, that is an instance number, from one upwards. The IED’s internal functionality and the external connections are separated with a dashed line presenting the IED’s physical casing.

Signal Matrix

With Signal Matrix in PCM600 the user can modify the standard configuration according to the actual needs. The IED is delivered from the factory with default connections described in the functional diagrams for BI's, BO's, function to function connections and alarm LEDs. Signal Matrix has a number of different page views, designated as follows:

- Binary input
- Binary output
- Functions

There are four IED variant-specific setting groups. Parameters can be set independently for each setting group.

The active setting group (1...6) can be changed with a parameter. The active setting group can also be changed via a binary input if the binary input is enabled for this. To enable the change of the active setting group via a binary input, connect a free binary input with PCM600 to the BI_SG_x input of the Protection block.

Table 6: Binary input states and corresponding active setting groups

BI state	Active setting group
OFF	1
ON	2

The active setting group defined by a parameter is overridden when a binary input is enabled for changing the active setting group.

3.2.1 Standard configurations

The feeder protection IED REF615 is available with two alternative standard configurations.

Table 7: Standard configurations

Description	Functional application configuration
Non-directional phase and ground over-current protection for single breaker.	A
Non-directional phase and ground over-current protection for two breakers.	B
Directional phase and ground over-current, voltage and frequency protection and power system metering for one breaker.	C
Directional phase and ground over-current, voltage and frequency protection, synch check and power system metering for one breaker.	D
Non-directional phase and ground over-current, voltage and power directional protection and power system metering for two breakers.	E

Table 8: Supported functions

Standard configuration functionality	Std config. A			Std config. B	Std config. C				Std config. D		Std config. E	ANSI/C37.2 - 2008
	AA	AB	AC	BA	CA	CB	CC	CD	DA	DB	EA	REF
Protection												
Three-phase non-directional overcurrent protection, low stage, instance 1	●	●	●	●	●	●	●	●	●	●	●	51P-1
Three-phase non-directional overcurrent protection, low stage, instance 2	-	-	-	●	-	-	-	-	-	-	●	51P-2
Three-phase non-directional overcurrent protection, high stage, instance 1	●	●	●	●	●	●	●	●	●	●	●	50P-1
Three-phase non-directional overcurrent protection, high stage, instance 2	●	●	●	●	●	●	●	●	●	●	●	50P-2
Three-phase non-directional overcurrent protection, high stage, instance 3	-	-	-	●	-	-	-	-	-	-	●	50P-4
Three-phase non-directional overcurrent protection, high stage, instance 4	-	-	-	●	-	-	-	-	-	-	●	50P-5
Three-phase non-directional overcurrent protection, instantaneous stage, instance 1	●	●	●	-	●	●	●	●	●	●	-	50P-3
Three-phase non-directional long time overcurrent protection, low stage, instance 1	●	●	●	-	●	●	●	●	●	●	-	51LT
Three-phase directional overcurrent protection, low stage, instance 1	-	-	-	-	-	-	●	●	●	●	-	67/51P
Three-phase directional overcurrent protection, high stage, instance 1	-	-	-	-	-	-	●	●	●	●	-	67/50P-1
Three-phase directional overcurrent protection, high stage, instance 2	-	-	-	-	-	-	●	●	●	●	-	67/50P-2
Non-directional ground-fault protection, low stage, instance 1	-	●	-	●	●	-	●	-	●	-	●	51G
Non-directional ground-fault protection, low stage, instance 2	●	●	●	●	●	●	●	●	●	●	●	51N-1
Non-directional ground-fault protection, low stage, instance 3	-	-	-	●	-	-	-	-	-	-	●	51N-2
Non-directional ground-fault protection, low stage, instance 4	-	-	●	-	-	●	-	●	-	●	-	50SEF
Non-directional ground-fault protection, high stage, instance 1	-	●	-	●	●	-	●	-	●	-	●	50G-1
Non-directional ground-fault protection, high stage, instance 2	-	●	-	-	●	-	●	-	●	-	-	50G-2
Non-directional ground-fault protection, high stage, instance 3	●	●	●	●	●	●	●	●	●	●	●	50N-1
Non-directional ground-fault protection, high stage, instance 4	●	●	●	●	●	●	●	●	●	●	●	50N-2
Non-directional ground-fault protection, high stage, instance 5	-	-	-	●	-	-	-	-	-	-	●	50N-4
Non-directional ground-fault protection, high stage, instance 6	-	-	-	●	-	-	-	-	-	-	●	50N-5
Non-directional ground-fault protection, instantaneous stage, instance 1	-	●	-	-	●	-	●	-	●	-	-	50G-3
Non-directional ground-fault protection, instantaneous stage, instance 2	●	●	●	-	●	●	●	●	●	●	-	50N-3

Standard configuration functionality	Std config. A			Std config. B	Std config. C				Std config. D		Std config. E	ANSI/C37.2 - 2008
	AA	AB	AC	BA	CA	CB	CC	CD	DA	DB	EA	REF
Directional ground-fault protection, low stage, instance 1	-	-	-	-	-	-	● 1,3)	● 1,3)	● 1,3)	● 1,3)	-	67/51N
Directional ground-fault protection, high stage, instance 1	-	-	-	-	-	-	● 1,3)	● 1,3)	● 1,3)	● 1,3)	-	67/50N-1
Directional ground-fault protection, high stage, instance 2	-	-	-	-	-	-	● 1,3)	● 1,3)	● 1,3)	● 1,3)	-	67/50N-2
Three phase directional power protection, instance 1	-	-	-	-	-	-	●	●	●	●	●	32P-1
Three phase directional power protection, instance 2	-	-	-	-	-	-	-	-	-	-	●	32P-2
Ground directional power protection, instance 1	-	-	-	-	-	-	● 1,3)	● 1,3)	● 1,3)	● 1,3)	● 1,3)	32N-1
Ground directional power protection, instance 2	-	-	-	-	-	-	-	-	-	-	● 1,3)	32N-2
Negative-sequence overcurrent protection, instance 1	●	●	●	●	●	●	●	●	●	●	●	46-1
Negative-sequence overcurrent protection, instance 2	●	●	●	●	●	●	●	●	●	●	●	46-2
Phase discontinuity protection	●	●	●	-	●	●	●	●	●	●	-	46PD
Residual overvoltage protection, instance 1	-	-	-	-	-	-	-	-	●	●	-	59G
Residual overvoltage protection, instance 2	-	-	-	-	-	-	●	●	●	●	● 4)	59N-1
Residual overvoltage protection, instance 3	-	-	-	-	-	-	-	-	-	-	● 4)	59N-2
Three-phase undervoltage protection, instance 1	-	-	-	-	-	-	●	●	●	●	●	27-1
Three-phase undervoltage protection, instance 2	-	-	-	-	-	-	●	●	●	●	●	27-2
Three-phase overvoltage protection, instance 1	-	-	-	-	-	-	●	●	●	●	●	59-1
Three-phase overvoltage protection, instance 2	-	-	-	-	-	-	●	●	●	●	●	59-2
Negative-sequence overvoltage protection, instance 1	-	-	-	-	-	-	●	●	●	●	●	47-1
Negative-sequence overvoltage protection, instance 2	-	-	-	-	-	-	●	●	●	●	●	47-2
Frequency protection, instance 1	-	-	-	-	-	-	●	●	●	●	-	81-1
Frequency protection, instance 2	-	-	-	-	-	-	●	●	●	●	-	81-2
Voltage per hertz protection, instance 1	-	-	-	-	-	-	●	-	-	-	●	24
Three-phase thermal protection for feeders, cables and distribution transformers, Instance 1	●	●	●	●	●	●	●	●	●	●	●	49F-1
Three-phase thermal protection for feeders, cables and distribution transformers, Instance 2	-	-	-	●	-	-	-	-	-	-	●	49F-2
Numerical stabilized low impedance restricted ground-fault protection	-	●	-	-	●	-	●	-	●	-	-	87LOZREF
Circuit breaker failure protection, instance 1	●	●	●	● 2)	●	●	●	●	●	●	● 2)	50BF-1
Circuit breaker failure protection, instance 2	-	-	-	● 2)	-	-	-	-	-	-	● 2)	50BF-2
Three-phase inrush detector, instance 1	●	●	●	●	●	●	●	●	●	●	●	INR-1

Standard configuration functionality	Std config. A			Std config. B	Std config. C				Std config. D		Std config. E	ANSI/C37.2 - 2008
	AA	AB	AC	BA	CA	CB	CC	CD	DA	DB	EA	REF
Three-phase inrush detector, instance 2	-	-	-	●	-	-	-	-	-	-	●	INR-2
Master trip, instance 1	●	●	●	●	●	●	●	●	●	●	●	86/94-1
Master trip, instance 2	●	●	●	●	●	●	●	●	●	●	●	86/94-2
Arc protection, instance 1	●	●	●	●	●	●	●	●	●	●	●	AFD-1
Arc protection, instance 2	●	●	●	●	●	●	●	●	●	●	●	AFD-2
Arc protection, instance 3	●	●	●	●	●	●	●	●	●	●	●	AFD-3
High impedance fault detection	-	-	●	-	-	●	-	●	-	●	-	HIZ
Load shedding and restoration, instance 1	-	-	-	-	-	-	●	●	●	●	-	81LSH-1
Load shedding and restoration, instance 2	-	-	-	-	-	-	●	●	●	●	-	81LSH-2
Loss of phase, instance 1	●	●	●	●	●	●	●	●	●	●	●	37-1
Loss of phase, instance 2	-	-	-	●	-	-	-	-	-	-	●	37-2
Control												
Circuit-breaker control, instance 1	●	●	●	●	●	●	●	●	●	●	●	52-1
Circuit-breaker control, instance 2	-	-	-	●	-	-	-	-	-	-	●	52-2
Auto-reclosing	●	●	●	-	●	●	●	●	●	●	-	79
Tap changer position indication	-	-	-	-	-	-	-	-	-	-	-	25
Synchronism and energizing check	-	-	-	-	-	-	-	-	●	●	-	52-1
Condition Monitoring												
Circuit-breaker condition monitoring, instance 1	●	●	●	●	●	●	●	●	●	●	●	52CM-1
Circuit-breaker condition monitoring, instance 2	-	-	-	●	-	-	-	-	-	-	●	52CM-2
Trip circuit supervision, instance 1	●	●	●	●	●	●	●	●	●	●	●	TCM-1
Trip circuit supervision, instance 2	●	●	●	●	●	●	●	●	●	●	●	TCM-2
Current circuit supervision	●	●	●		●	●	●	●	●	●		CCM
Fuse failure supervision, instance 1	-	-	-	-	-	-	●	●	●	●	●	60-1
Fuse failure supervision, instance 2	-	-	-	-	-	-	-	-	-	-	●	60-2
Cable fault detection	●	●	●	-	●	●	●	●	●	●	-	CFD
Measurement												
Three-phase current measurement, instance 1	●	●	●	●	●	●	●	●	●	●	●	IA, IB, IC
Three-phase current measurement, instance 2	-	-	-	●	-	-	-	-	-	-	●	IA, IB, IC (2)
Sequence current measurement, instance 1	●	●	●	●	●	●	●	●	●	●	●	I1, I2, I0
Sequence current measurement, instance 2	-	-	-	●	-	-	-	-	-	-	●	I1, I2, I0 (2)
Residual current measurement, instance 1	-	●	●	●	●	●	●	●	●	●	●	IG
Three-phase voltage measurement, instance 1	-	-	-	-	●	●	●	●	●	●	●	VA, VB, VC

Standard configuration functionality	Std config. A			Std config . B	Std config. C				Std config. D		Std config . E	ANSI/C37.2 - 2008
	AA	AB	AC	BA	CA	CB	CC	CD	DA	DB	EA	REF
Three-phase voltage measurement, instance 2	-	-	-	-	-	-	-	-	-	-	●	VA, VB, VC (2)
Residual voltage measurement, instance 1	-	-	-	-	-	-	-	-	●	●	-	VG
Sequence voltage measurement, instance 1	-	-	-	-	●	●	●	●	●	●	●	VG
Sequence voltage measurement, instance 2	-	-	-	-	-	-	-	-	-	-	●	V1, V2, V0
Single-phase power and energy measurement, instance 1	-	-	-	-	●	●	●	●	●	●	●	V1, V2, V0 (2)
Single-phase power and energy measurement, instance 2	-	-	-	-	-	-	-	-	-	-	●	SP, SE-1
Three-phase power and energy measurement, instance 1	-	-	-	-	●	●	●	●	●	●	●	SP, SE-2
Three-phase power and energy measurement, instance 2	-	-	-	-	-	-	-	-	-	-	●	P, E-1
Current total demand distortion, instance 1	●	●	●	●	●	●	●	●	●	●	●	P, E-2
Current total demand distortion, instance 2	-	-	-	●	-	-	-	-	-	-	●	PQI-1
Voltage total harmonic distortion, instance 1	-	-	-	-	●	●	●	●	●	●	●	PQI-2
Voltage total harmonic distortion, instance 2	-	-	-	-	-	-	-	-	-	-	●	PQVPH-1
Voltage variation, instance 1	-	-	-	-	●	●	●	●	●	●	●	PQVPH-2
Voltage variation, instance 2	-	-	-	-	-	-	-	-	-	-	●	PQSS-1
Load profile	●	●	●	-	●	●	●	●	●	●		PQSS-2
Frequency measurement, instance 1	-	-	-	-	●	●	●	●	●	●	●	LoadProf
Other functions												
Minimum pulse timer (2 pcs), instance 1	●	●	●	●	●	●	●	●	●	●	●	TP 1
Minimum pulse timer (2 pcs), instance 2	●	●	●	●	●	●	●	●	●	●	●	TP 2
Minimum pulse timer (2 pcs), instance 3	●	●	●	●	●	●	●	●	●	●	●	TP 3
Minimum pulse timer (2 pcs), instance 4	●	●	●	●	●	●	●	●	●	●	●	TP 4
Minimum pulse timer (2 pcs, second resolution), instance 1	●	●	●	●	●	●	●	●	●	●	●	62CLD-1
Minimum pulse timer (2 pcs, second resolution), instance 2	-	-	-	●	-	-	-	-	-	-	●	62CLD-3
Minimum pulse timer (2 pcs, minute resolution), instance 1	●	●	●	●	●	●	●	●	●	●	●	62CLD-2
Minimum pulse timer (2 pcs, minute resolution), instance 2	-	-	-	●	-	-	-	-	-	-	●	62CLD-4
Pulse timer (8 pcs), instance 1	●	●	●	●	●	●	●	●	●	●	●	PT-1
Pulse timer (8 pcs), instance 2	●	●	●	●	●	●	●	●	●	●	●	PT-2
Time delay off (8 pcs), instance 1	●	●	●	●	●	●	●	●	●	●	●	TOF-1
Time delay off (8 pcs), instance 2	●	●	●	●	●	●	●	●	●	●	●	TOF-2
Time delay on (8 pcs), instance 1	●	●	●	●	●	●	●	●	●	●	●	TON -1

Standard configuration functionality	Std config. A			Std config. B	Std config. C				Std config. D		Std config. E	ANSI/C37.2 - 2008
	AA	AB	AC	BA	CA	CB	CC	CD	DA	DB	EA	REF
Time delay on (8 pcs), instance 2	●	●	●	●	●	●	●	●	●	●	●	TON -2
Set reset (8 pcs), instance 1	●	●	●	●	●	●	●	●	●	●	●	SR-1
Set reset (8 pcs), instance 2	●	●	●	●	●	●	●	●	●	●	●	SR-2
Move (8 pcs), instance 1	●	●	●	●	●	●	●	●	●	●	●	MV-1
Move (8 pcs), instance 2	●	●	●	●	●	●	●	●	●	●	●	MV-2
Disturbance recorder	●	●	●	●	●	●	●	●	●	●	●	TP 1
Fault recorder	●	●	●	●	●	●	●	●	●	●	●	TP 2
Sequence event recorder	●	●	●	●	●	●	●	●	●	●	●	TP 3
Fault location	-	-	-	-	●	●	●	●	●	●	-	TP 4
Logging functions												
Disturbance recorder	●	●	●	●	●	●	●	●	●	●	●	DFR
Fault recorder	●	●	●	●	●	●	●	●	●	●	●	FR
Sequence event recorder	●	●	●	●	●	●	●	●	●	●	●	SER
Fault location	-	-	-	-	●	●	●	●	●	●	-	FLO

1) Io selectable by parameter, **I2** as default

2) Calculated neutral current is always used

3) Vo calculated and negative sequence voltage selectable by parameter, V2 as default

4) Vo calculated is always used

3.3 Standard Configuration for Order Code Functional Applications A

3.3.1 Applications

This standard configuration is mainly intended for distribution feeders and a single breaker. With the numerous non-directional phase and ground overcurrent elements, this configuration can also be applied for bus overcurrent and high-side or low-side transformer backup protection.

The IED with this standard configuration is delivered from the factory with default settings and parameters. The end-user flexibility for incoming, outgoing and internal signal designation within the IED enable this configuration to be further adapted to different primary power system layouts and the related functionality needs by modifying the internal functionality using PCM600.

3.3.2 Functions

Table 9: Functions included in the REF615 standard configuration

Software Configuration				A		
Function	IEC 61850	ANSI C37.2-2008	EC 60617	AA	AB	AC
Protection						
Three-phase non-directional overcurrent protection, low stage, instance 1	PHLPTOC1	51P-1	3I> (1)	●	●	●
Three-phase non-directional overcurrent protection, high stage, instance 1	PHHPTOC1	50P-1	3I>> (1)	●	●	●
Three-phase non-directional overcurrent protection, high stage, instance 2	PHHPTOC2	50P-2	3I>> (2)	●	●	●
Three-phase non-directional overcurrent protection, instantaneous stage, instance 1	PHIPTOC1	50P-3	3I>>> (1)	●	●	●
Three-phase non-directional long time overcurrent protection, low stage, instance 1	PHLTPTOC1	51LT	3I> (3)	●	●	●
Non-directional ground-fault protection, low stage, instance 1	EFLPTOC1	51G	Io> (1)	-	●	-
Non-directional ground-fault protection, low stage, instance 2	EFLPTOC2	51N-1	Io> (2)	●	●	●
Non-directional ground-fault protection, low stage, instance 4	EFLPTOC4	50SEF	Io> (4)	-	-	●
Non-directional ground-fault protection, high stage, instance 1	EFHPTOC1	50G-1	Io>> (1)	-	●	-
Non-directional ground-fault protection, high stage, instance 2	EFHPTOC2	50G-2	Io>> (2)	-	●	-
Non-directional ground-fault protection, high stage, instance 3	EFHPTOC3	50N-1	Io>> (3)	●	●	●
Non-directional ground-fault protection, high stage, instance 4	EFHPTOC4	50N-2	Io>> (4)	●	●	●
Non-directional ground-fault protection, instantaneous stage, instance 1	EFIPTOC1	50G-3	Io>>> (1)	-	●	-
Non-directional ground-fault protection, instantaneous stage, instance 2	EFIPTOC2	50N-3	Io>>> (2)	●	●	●
Negative-sequence overcurrent protection, instance 1	NSPTOC1	46-1	I2> (1)	●	●	●
Negative-sequence overcurrent protection, instance 2	NSPTOC2	46-2	I2> (2)	●	●	●
Phase discontinuity protection	PDNSPTOC 1	46PD	I2/I1>	●	●	●
Three-phase thermal protection for feeders, cables and distribution transformers, Instance 1	T1PTTR1	49F-1	3Ith>F (1)	●	●	●
Numerical stabilized low impedance restricted ground-fault protection	LREFPNDF1	87LOZREF	dIoLo>	-	●	-
Circuit breaker failure protection, instance 1	CCBRBRF1	50BF-1	3I>/Io>BF (1)	●	●	●
Three-phase inrush detector, instance 1	INRPHAR1	INR-1	3I2f> (1)	●	●	●
Master trip, instance 1	TRPPTRC1	86/94-1	Master Trip (1)	●	●	●

Software Configuration				A		
Function	IEC 61850	ANSI C37.2-2008	EC 60617	AA	AB	AC
Master trip, instance 2	TRPPTRC2	86/94-2	Master Trip (2)	●	●	●
Arc protection, instance 1	ARCSARC1	AFD-1	ARC (1)	●	●	●
Arc protection, instance 2	ARCSARC2	AFD-2	ARC (2)	●	●	●
Arc protection, instance 3	ARCSARC3	AFD-3	ARC (3)	●	●	●
High impedance fault detection	PHIZ1	HIZ	PHIZ1	-	-	●
Loss of phase, instance 1	PHPTUC1	37-1	3I< (1)	●	●	●
Control						
Circuit-breaker control, instance 1	CBXCBR1	52-1	I <-> O CB (1)	●	●	●
Auto-reclosing	DARREC1	79	O -> I	●	●	●
Condition Monitoring						
Circuit-breaker condition monitoring, instance 1	SSCBR1	52CM-1	CBCM (1)	●	●	●
Trip circuit supervision, instance 1	TCSSCBR1	TCM-1	TCS (1)	●	●	●
Trip circuit supervision, instance 2	TCSSCBR2	TCM-2	TCS (2)	●	●	●
Current circuit supervision	CCRDIF1	CCM	MCS 3I	●	●	●
Cable fault detection	RCFD1	CFD	RCFD1	●	●	●
Measurement						
Three-phase current measurement, instance 1	CMMXU1	IA, IB, IC	3I	●	●	●
Sequence current measurement, instance 1	CSMSQI1	I1, I2, I0	I1, I2, I0	●	●	●
Residual current measurement, instance 1	RESCMMXU 1	IG	Io	-	●	●
Current total demand distortion, instance 1	CMHAI1	PQI-1	PQM3I	●	●	●
Load profile	LDPMSTA1	LoadProf	-	●	●	●
Other functions						
Minimum pulse timer (2 pcs), instance 1	TPGAPC1	TP 1	TP (1)	●	●	●
Minimum pulse timer (2 pcs), instance 2	TPGAPC2	TP 2	TP (2)	●	●	●
Minimum pulse timer (2 pcs), instance 3	TPGAPC3	TP 3	TP (3)	●	●	●
Minimum pulse timer (2 pcs), instance 4	TPGAPC4	TP 4	TP (4)	●	●	●
Minimum pulse timer (2 pcs, second resolution), instance 1	TPSGAPC1	62CLD-1	TPS (1)	●	●	●
Minimum pulse timer (2 pcs, minute resolution), instance 1	TPMGAPC1	62CLD-2	TPM (1)	●	●	●
Pulse timer (8 pcs), instance 1	PTGAPC1	PT-1	PT (1)	●	●	●
Pulse timer (8 pcs), instance 2	PTGAPC2	PT-2	PT (2)	●	●	●
Time delay off (8 pcs), instance 1	TOFGAPC1	TOF-1	TOF (1)	●	●	●

Software Configuration				A		
Function	IEC 61850	ANSI C37.2-2008	EC 60617	AA	AB	AC
Time delay off (8 pcs), instance 2	TOFGAPC2	TOF-2	TOF (2)	•	•	•
Time delay on (8 pcs), instance 1	TONGAPC1	TON -1	TON (1)	•	•	•
Time delay on (8 pcs), instance 2	TONGAPC2	TON -2	TON (2)	•	•	•
Set reset (8 pcs), instance 1	SRGAPC1	SR-1	SR (1)	•	•	•
Set reset (8 pcs), instance 2	SRGAPC2	SR-2	SR (2)	•	•	•
Move (8 pcs), instance 1	MVGAPC1	MV-1	MV (1)	•	•	•
Move (8 pcs), instance 2	MVGAPC2	MV-2	MV (2)	•	•	•
Logging functions						
Disturbance recorder	RDRE1	DFR	-	•	•	•
Fault recorder	FLMSTA1	FR	-	•	•	•
Sequence event recorder	SER	SER	-	•	•	•

3.3.3 DEFAULT Input/Output (I/O) assignments

Table 10: Default connections for analog inputs

Analog input	Default usage	Connector pins
IA	Phase A current	X120-7, 8
IB	Phase B current	X120-9, 10
IC	Phase C current	X120-11, 12
IG	Ground current	X120-13,14

Table 11: Default connections for binary inputs

Binary input	Default usage	Connector pins
X120-BI1	Ground blocking	X120-1, 2
X120-BI2	Circuit breaker closed position	X120-3, 2
X120-BI3	Circuit breaker open position	X120-4, 2
X120-BI4	Autoreclose blocking	X120-5,6

Table 12: Default connections for binary outputs

Binary output	Default usage	Connector pins
X100-PO1	Close circuit breaker	X100 – 6,7
X100-PO2	Breaker failure backup trip to upstream breaker	X100 – 8,9
X100-SO1		
X100-SO2		
X100-PO3	Open circuit breaker / Master Trip -1	X100 – 15,16,17,18,19
X100-PO4	Open circuit breaker / Master Trip -2	X100 – 20,21,22,23,24
X110-SO1		X110-14,15,16
X110-SO2		X110-17,18,19
X110-SO3		X110-20,21,22
X110-SO4		X110-23,24

*Table 13: High speed binary output connections**

Binary output	Default usage	Connector pins
X110-HSO1	Open circuit breaker / Master Trip -1	X110 – 15,16
X110-HSO2	Trip from ARC-2 protection	X110 – 19,20
X110-HSO3	Trip from ARC-3 protection	X110 – 23,24
*Available only if IED has been ordered with High speed binary output (HSO) card		

Table 14: Default connections for LEDs

LED	LED label
LED 1	Phase A
LED 2	Phase B
LED 3	Phase C
LED 4	Neutral, Neutral / Ground, Neutral / SEF
LED 5	Time
LED 6	Instantaneous
LED 7	Recloser lockout
LED 8	Breaker Failure/Alarm
LED 9	Overload Alarm/Trip
LED 10	Arc Flash Detection
LED 11	HIZ Detection

Some of the alarm led channel connections in the standard configuration depends on the optional functionality and are available according to order code

3.3.4 Typical connection diagrams

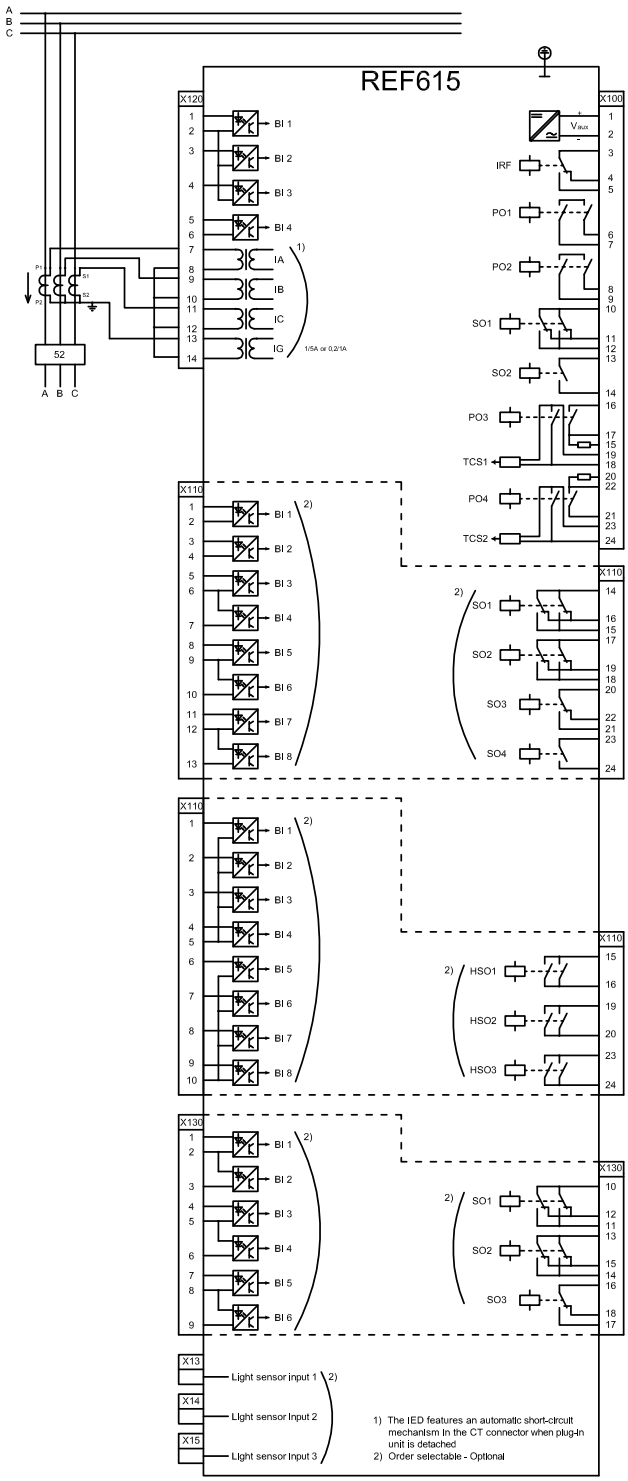

3.3.5 Functional diagrams

The functional diagrams describe the default input, output, alarm LED and function-to-function connections. The default connections can be viewed with and changed with PCM 600 according to the application requirements, if necessary.

The analog channels, measurements from CTs, have fixed connections to the different function blocks inside the IED's standard configuration.

The signal marked with IA, IB and IC represents the three phase currents. The signal IG represents the measured ground current.

REF615 offers six different settings group which the user can set based on individual needs. Each group can then, be activated/ deactivated by using the setting group settings available in REF615.

3.3.6 Functional diagrams for protection

The functional diagrams describe the IED's protection functionality in detail and according to the factory set default connections.

Five overcurrent stages totally are offered for non directional overcurrent and short-circuit protection. The non directional high stage (50P-1) will be blocked by cold load detection logic. The cold load detection logic starts from closing of the circuit breaker and is active during set time. The cold load detection logic's active time can be set in a resolution of minutes or seconds to the functions TPSGAPC and TPMGAPC.

The inrush detection block's (INR-1) output BLK2H offers the possibility to either block the function or multiply the active settings for any of the shown protection function blocks.

All trip signals are connected to the Master Trip and also to the alarm LEDs. Alarm LEDs 1, 2 and 3 are used for phase segregated information of current based faults. The alarm LED5 is used to indicate time delayed trips and the alarm LED6 instantaneous trips of the current based protection functions.

The pickup information of all overcurrent functions is collected to the variable OC_PICKUP_ALARM and connected to the disturbance recorder. This signal can be mapped to the signal outputs depending on the application needs.

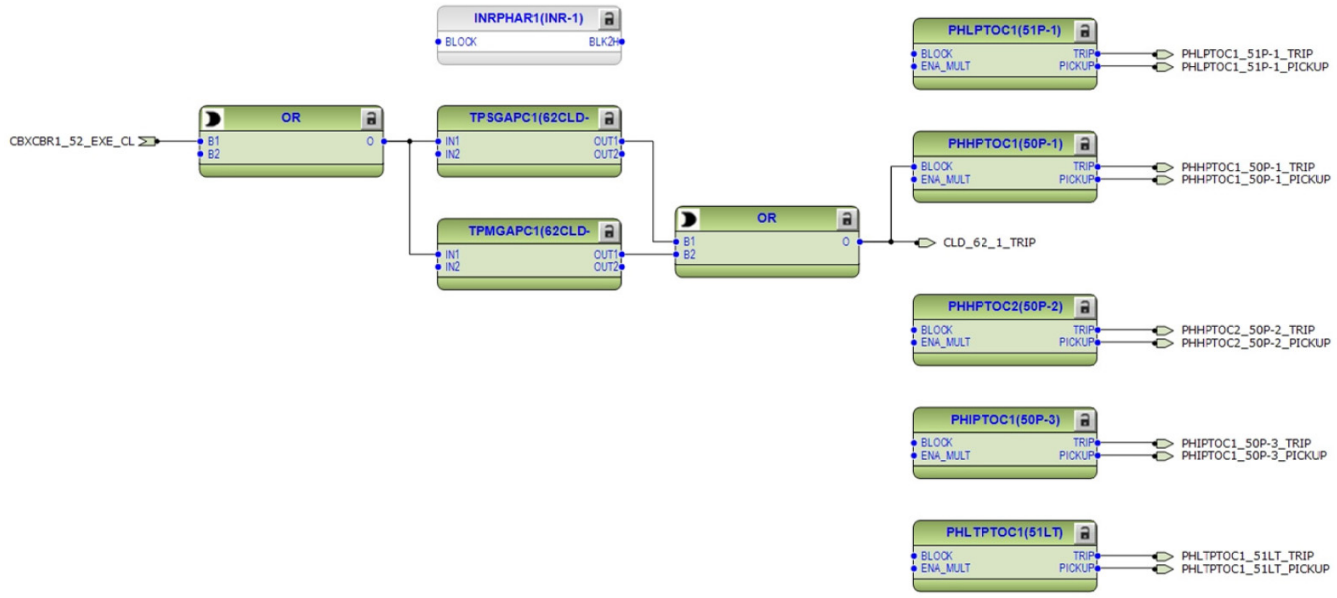

Figure 6: Three phase overcurrent protection

Four stages are provided to non-directional neutral overcurrent protection. Additionally depending on order option, one stage is offered as a sensitive ground fault protection. The neutral overcurrent protection uses calculated residual current component.

The operation of 51N, 51N-1, 51N-2 and 50SEF will be blocked if GROUND_BLOCKING input is active. The 50N-1 will also be blocked if the cold load detection logic is activated. The operation of neutral overcurrent protection functions is connected to alarm LED 4.

The alarm LED5 is used to indicate time delayed trips and the alarm LED6 instantaneous trips of the current based protection functions.

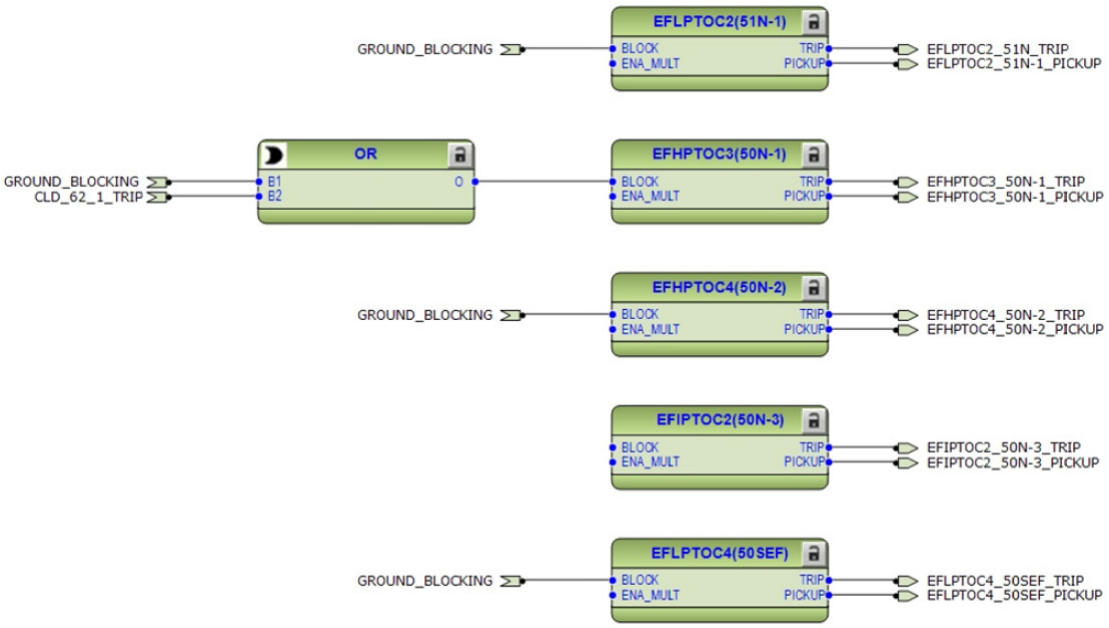

Figure 7: Non-directional neutral overcurrent protection

SEF and HIZ functions are included if sensitive SEF/HIZ measuring option is used.

Four stages are provided to non-directional ground fault protection. Additionally depending on order option, one stage is offered as a sensitive ground fault protection. The ground fault protection uses measured residual current component.

The operation of 51G, 51G-1 and 51G-2 will be blocked if GROUND_BLOCKING input is active. The 50G-1 will also be blocked if the cold load detection logic is activated. The operation of neutral overcurrent protection functions is connected to alarm LED 4.

The alarm LED5 is used to indicate time delayed trips and the alarm LED6 instantaneous trips of the current based protection functions.

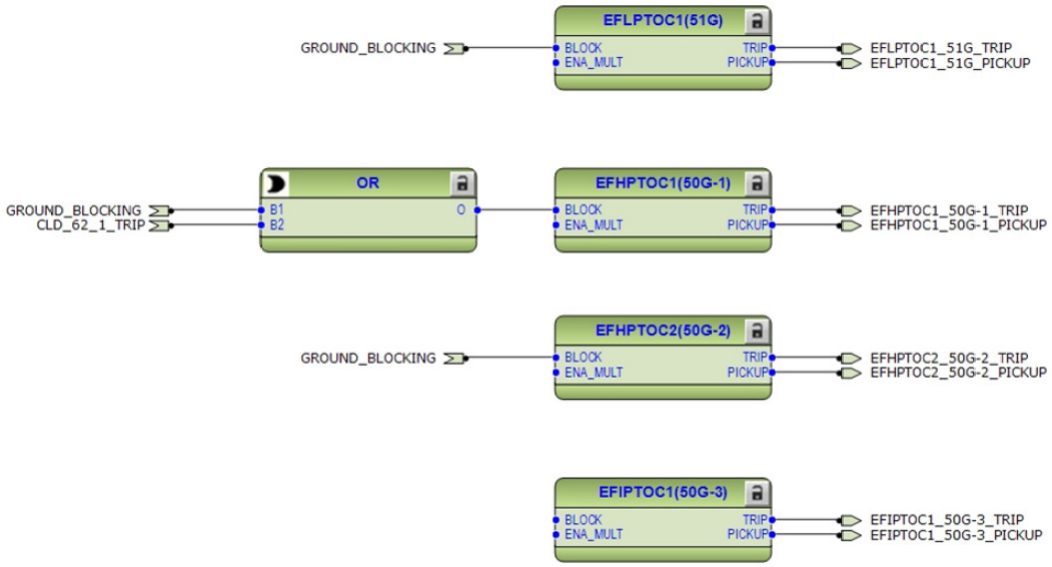

Figure 8: Non-directional neutral overcurrent protection

51G, 50G-1, 50G-2 and 50G-3 are included if ground measuring option is used.

Two negative-sequence overcurrent protection (46-1 and 46-2) stages are provided for phase unbalance protection. These functions are used to protect the feeder against phase unbalance.

The phase discontinuity protection (46PD) provides protection for interruptions in the normal three-phase load supply, like in downed conductor situations.

The operation of 46-1, 46-2 and 46PD is not blocked as default by any functionality. The operation of these protection functions is connected to alarm LED 5. The pickup signals are connected to OC_PICKUP_ALARM variable in logic.

The undercurrent protection function (37-1) is offered for protection against loss of phase situations. The trip signal is connected to the disturbance recorder only by default.

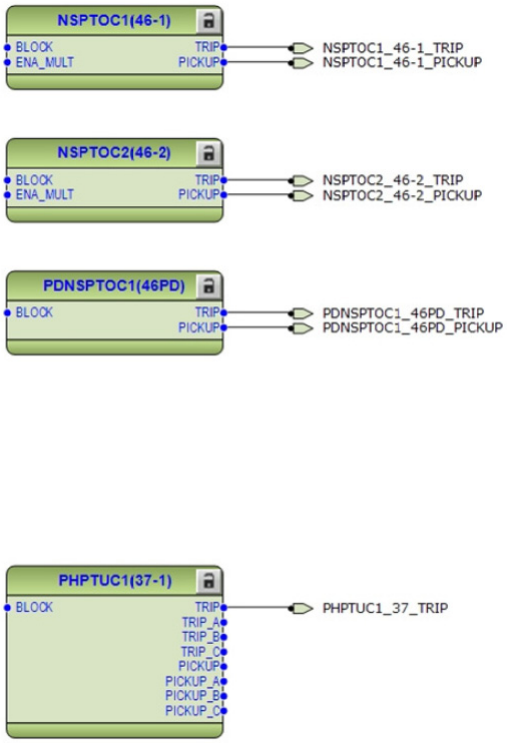

Figure 9: Negative sequence, phase discontinuity and undercurrent protection

All overcurrent pickup signals are merged together as variable OC_PICKUP_ALARM. This alarm is by default connected to disturbance recorder channel. It can be mapped also e.g. for alarming or blocking purposes to the binary output relays.

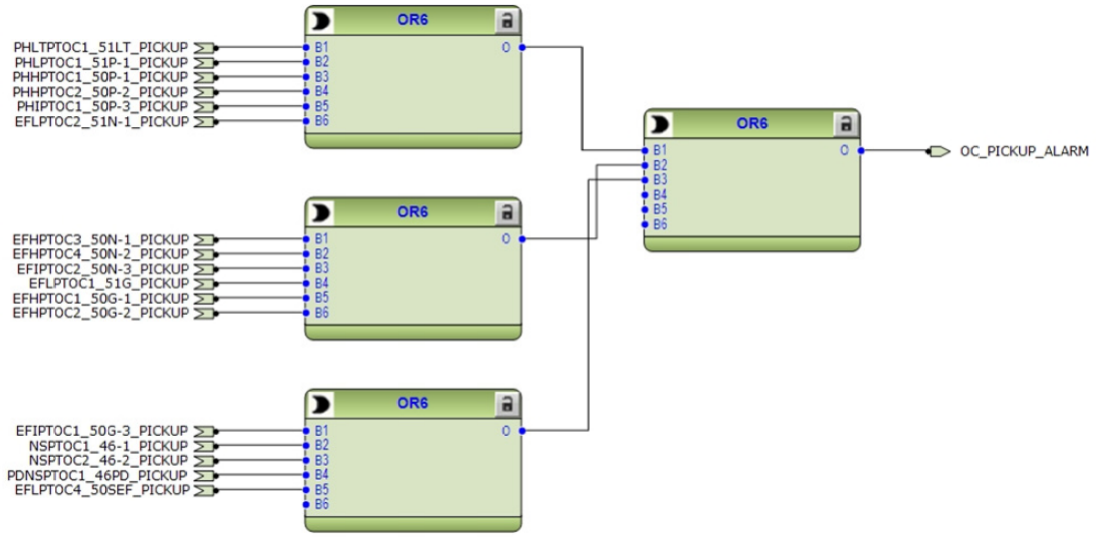

Figure 10: *Overcurrent pickup alarm*

The thermal overload protection function (49F-1) detects short and long term overloads under varying load conditions.

The trip of the thermal overload protection function is connected to the Master Trip1. The alarm and trip signals are connected to alarm LED 9.

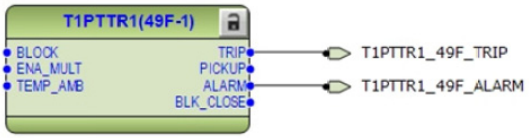

Figure 11: *Thermal overload protection*

According to the order code the configuration includes restricted low-impedance ground-fault protection function (87LOZREF). The function is available with functional application AB.

The numerical differential current stage operates exclusively on ground faults occurring in the protected area, that is, in the area between the phase and ground current transformers. An ground fault in this area appears as a differential current between the residual current of the phase currents and the neutral current of the conductor between the star-point of the transformer and ground.

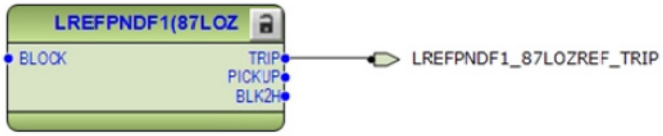

Figure 12: Low impedance restricted ground fault protection

The circuit-breaker failure protection (50BF) is initiated via the PICKUP input by a functions connected to the Master Trip 1 and by opening command of the circuit breaker. 50BF offers different operating modes associated with the circuit-breaker position and the measured phase and residual currents.

50BF has two operating outputs: TRRET and TRBU. The TRBU output can be used to give a backup trip to the circuit breaker feeding upstream. In the configuration the TRBU output signal is connected to the output PO2 (X100: 8-9).

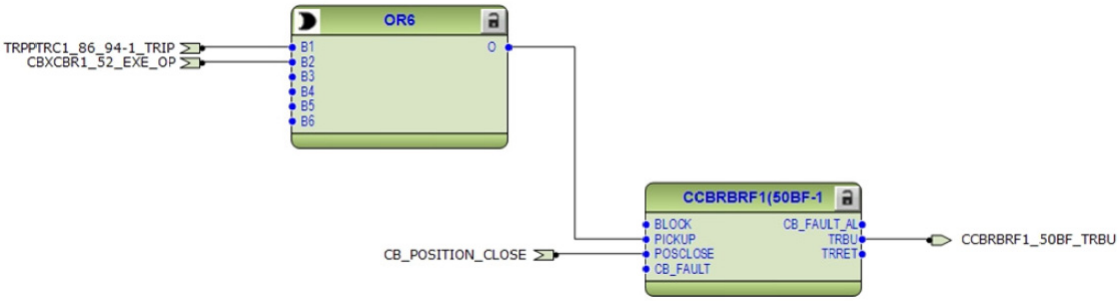

Figure 13: Circuit breaker failure protection

The TRRET operate output can be used for retripping its own circuit breaker through the Master Trip again. However this is not connected in present configuration.

Three arc protection (AFD-1, AFD-2 and AFD-3) stages are included as an optional function. The arc protection offers individual function blocks for three ARC sensors that can be connected to the IED. Each arc protection function block has two different operation modes, with or without the phase and residual current check.

Trip signal from AFD-1 is connected to Master trip 1, available at PO3 (X100: 15-19). Whereas the trip signal from AFD-2 and AFD-3 is connected to master trip 2, available at PO4 (X100: 20-24). The operation of these protection functions is connected to alarm LED 11.

If the IED has been ordered with high speed binary outputs, then trip signal from AFD-2 and AFD-3 are connected directly to high speed output HSO2 (X110:19-20) and HS03(X110:23-24) respectively.

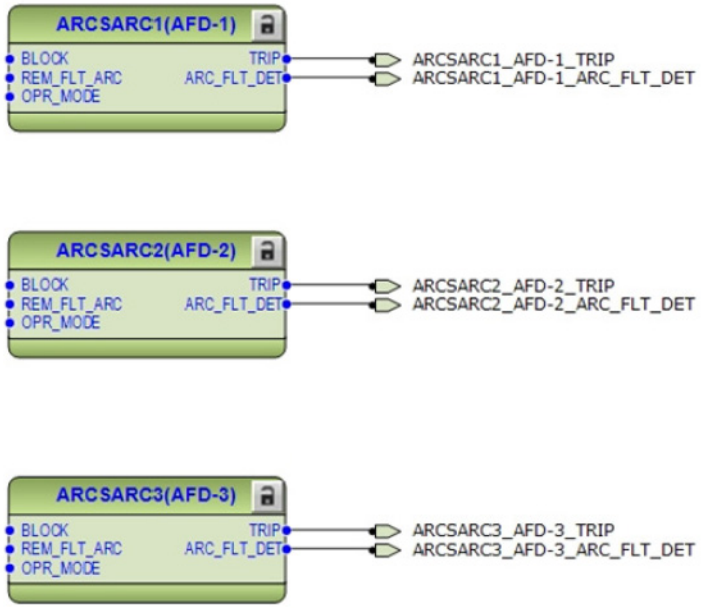

Figure 14: Arc protection

According to the order code the configuration includes high impedance fault protection function (HIZ). The function is available with functional application AC. The trip of the high impedance protection function is connected to the disturbance recorder and to the alarm LED 11.

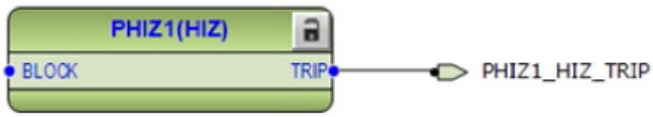

Figure 15: High impedance fault protection

Two master trip logics (86/94-1 and 86/94-2) are provided as a trip command collector. 86/94-1 collects the trip signals from 46, 46PD, 49F, 50P, 50N, 50G, 51LT, 51P, 51N, 51G, 87LOZREF, AFD-1 and SEF protection functions and is connected to trip output contact PO3 (X100:16-19) and also to high speed output HS01 (X110:15-16) for IEDs ordered with high speed binary output cards.

Open control commands to the circuit breaker from the local or remote is also connected directly to the output PO3 (X100:16-19) from circuit breaker control (52) function block.

86/94-2 collects the trip signals from AFD-2 and AFD-3 protection functions and is connected to trip output contact PO4 (X100:20-24).

86/94-1 and 86/94-2 provides the lockout/latching function, event generation and the trip signal duration setting. If the lockout operation mode is selected, one binary input can be reassigned to the RST_LKOUT input of the Master Trip to enable external reset with a push button.

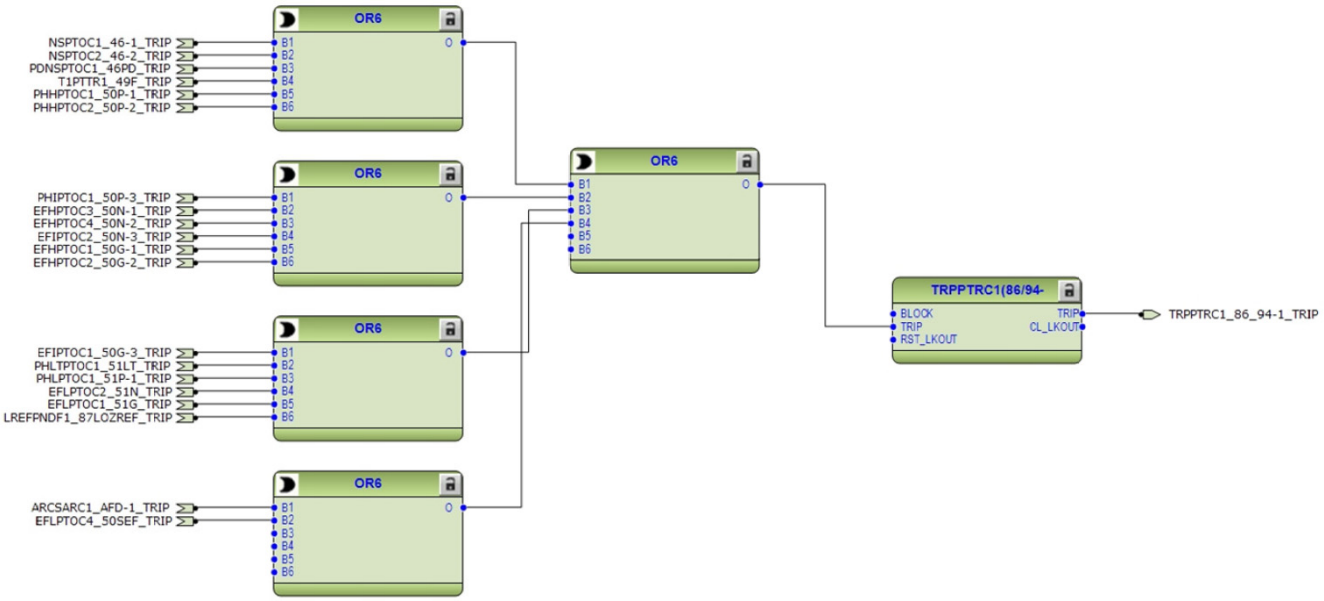

Figure 16: *Master trip logic 1*

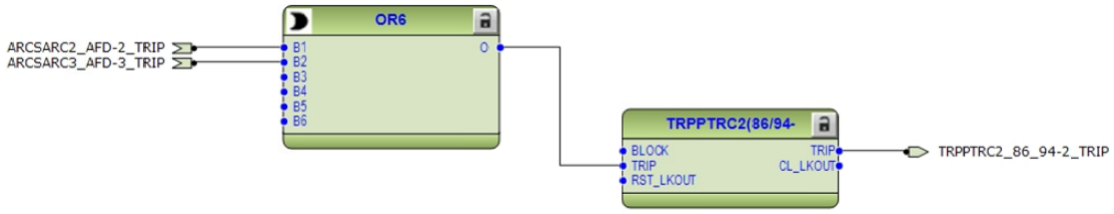

Figure 17: *Master trip logic 2*

3.3.7 Functional diagrams for control functions

The circuit breaker closing is enabled when the ENA_CLOSE input is activated. The input can be activated by the configuration logic, which is e.g. a combination of the disconnector or breaker truck and ground switch position status and the status of the Master Trip logics and gas pressure alarm and circuit-breaker spring charging. With the present configuration, the activation of ENA_CLOSE input is configured using only Master Trip logic 86/94-1 and 86/94-2 i.e. the circuit breaker cannot be closed in case master trip is active.

The ITL_BYPASS input can be used, for example, to always enable the closing of the circuit breaker when the circuit breaker truck is in the test position, despite of the interlocking conditions being active when the circuit breaker truck is closed in service position.

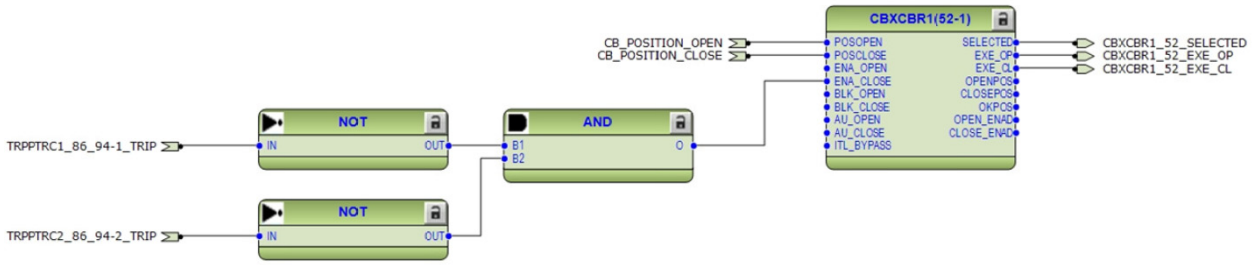

Figure 18: Circuit breaker control

If the ENA_CLOSE and BLK_CLOSE signals are completely removed from the breaker control function block 52 with PCM600, the function assumes that the breaker close commands are allowed continuously.

The autorecloser functionality (79) is configured to be initiated by operate signals from a number of protection stages through the INIT1...5 inputs. It is possible to create individual autoreclose sequences for each input.

The autoreclose function can be blocked with the INHIBIT_RECL input. By default, the operation of selected protection functions is connected to this input. A control command to the circuit breaker, either local or remote, also blocks the autoreclose function via the CBXCBR-selected signal. The circuit breaker availability for the autoreclosure sequence is expressed with the CB_READY input in DARREC1. In the configuration, this signal is not connected to any of the binary inputs. As a result, the function assumes that the breaker is available all the time.

The autoreclose locked status is connected to the alarm LED 7. The unsuccessful autoreclosing UNSUC_RECL is connected to the disturbance recorder.

The autoreclosing function is optional functionality and is included into configuration according to the order code

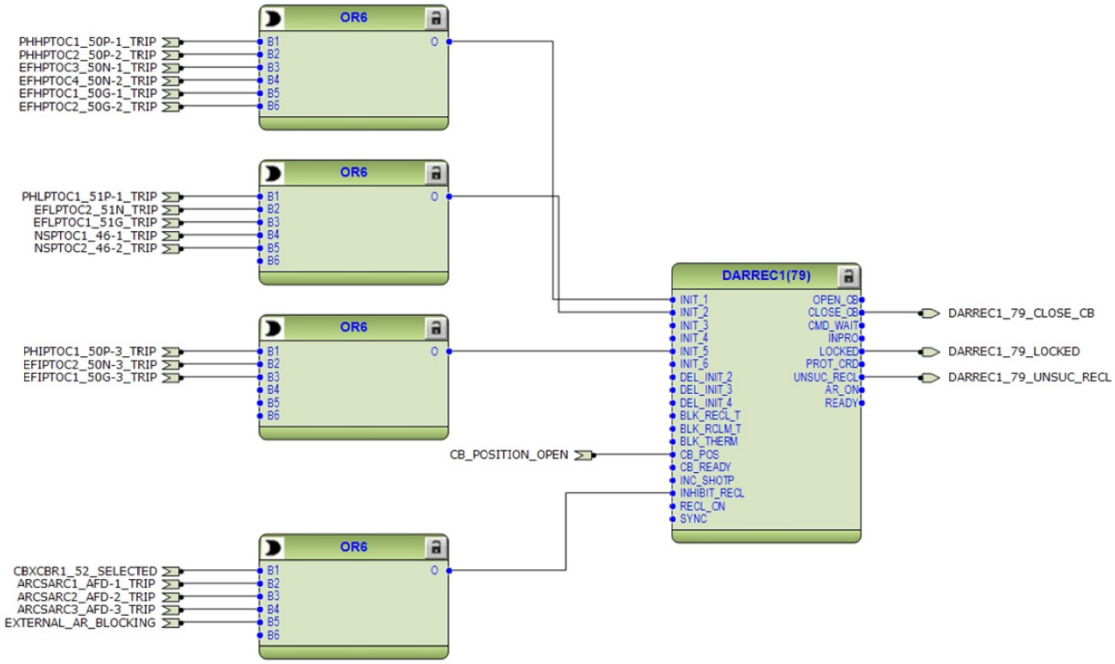

Figure 19: *Autoreclosing*

3.3.8 Functional diagrams for condition monitoring

Two trip circuit monitoring (TCM-1 and TCM-2) stages are provided to supervise the trip circuit of the circuit breaker connected at PO3 (X100:15-19) and PO4 (X100:20-24).

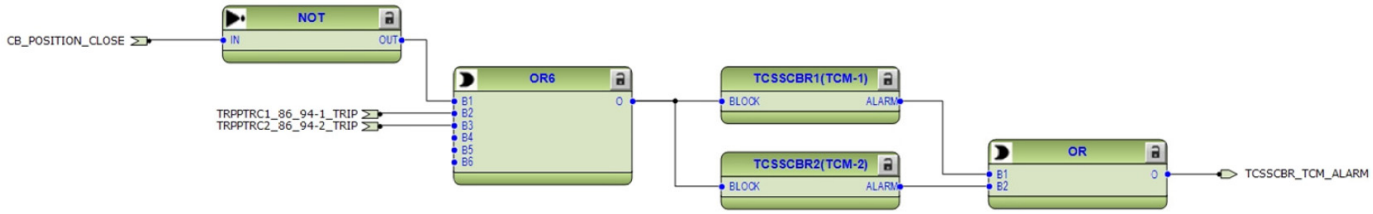

Figure 20: *Trip circuit monitoring*

The TCM-1 and TCM-2 functions are blocked by 86/94-1, 86/94-2 and when the circuit-breaker is not in closed position.

By default it is expected that there is no external resistor in the circuit breaker tripping/closing coil circuit connected parallel with circuit breaker normally open/closed auxiliary contact.

A failure in current measuring circuits is detected by current circuit supervision function (CCM). When a failure is detected, function activates and can be used to block protection functions which operates using calculated sequence component currents for example 46, thus avoiding mal-operation.

Figure 21: Current circuit supervision

By default the FAIL output from CCM function is only connected to disturbance recorder

The circuit breaker condition monitoring function (52CM) supervises the circuit breaker status based on the binary input information connected and measured current levels. The function introduces various supervision alarms.

The collective alarm output is connected to the alarm LED 8.

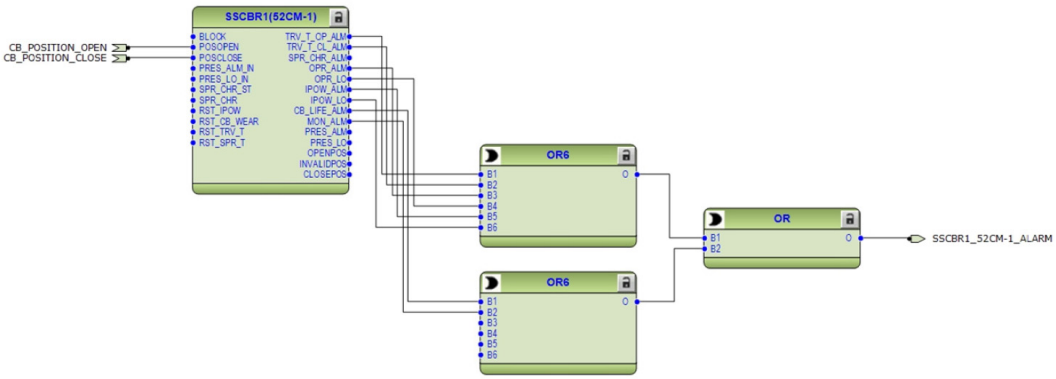

Figure 22: Circuit breaker condition monitoring

Cable fault detector (CFD) is offered for detecting self clearing in the feeder. The cable fault detector function is optional functionality and is included into configuration according to the ordercode.

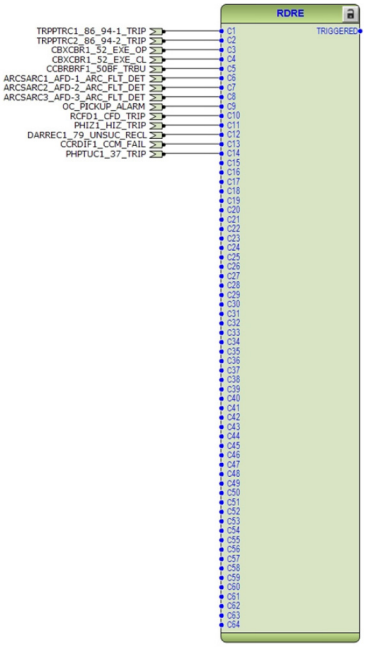

Figure 23: *DFR (Disturbance recorder)*

By default the TRIP output from CFD function is only connected to disturbance recorder

3.3.9 Functional diagrams for Measurements

The phase current inputs to the IED are measured by three-phase current measurement (IA, IB, IC) function block. The current input is connected to the X120 card in the back panel. Similarly the sequence and residual current are measured by sequence current measurement (I1, I2, I0) and residual current measurement (IG) function blocks respectively.

The measurements can be seen from the LHMI and is available using the measurement option in the menu selection. Based on the settings, IA, IB, IC and IG function blocks can generate low alarm/warning, high alarm/warning signals for the measured current values.

The power quality function (PQI-1) is used to measure the harmonic contents of the phase current. This functionality is included according to ordercode selection.

The load profile (LoadProf) function is also included into measurements sheet. The load profile function offers ability to observe the history of the loading of the corresponding feeder.

Figure 24: Current measurements and load profile function

3.3.10 Functional diagrams for other functions

Configuration also includes other miscellaneous basic functions which are not configured, but can be used for creating general purpose logics. These functions include:

- Four instance of Minimum Pulse Timer TP-1, TP-2, TP-3 and TP-4,
- Two instance of Pulse Timer PT-1 and PT-2,
- Two instance of Time delay off TOF-1 and TOF-2,
- Two instance of Time delay on TON-1 and TON-2,
- Two instance of Set reset logic SR-1 and SR-2 and
- Two instance of Move logic MV-1 and MV-2

3.3.11 Functional diagrams for logging functions

The disturbance recorder DFR consists of 64 channels. However as default few channel are connected to trigger the digital fault recorder are as shown in Figure 25. More connection can be made as per individual need. Also when disturbance recorder is triggered the analog values available at the analog inputs are recorded by fault recorder FR.

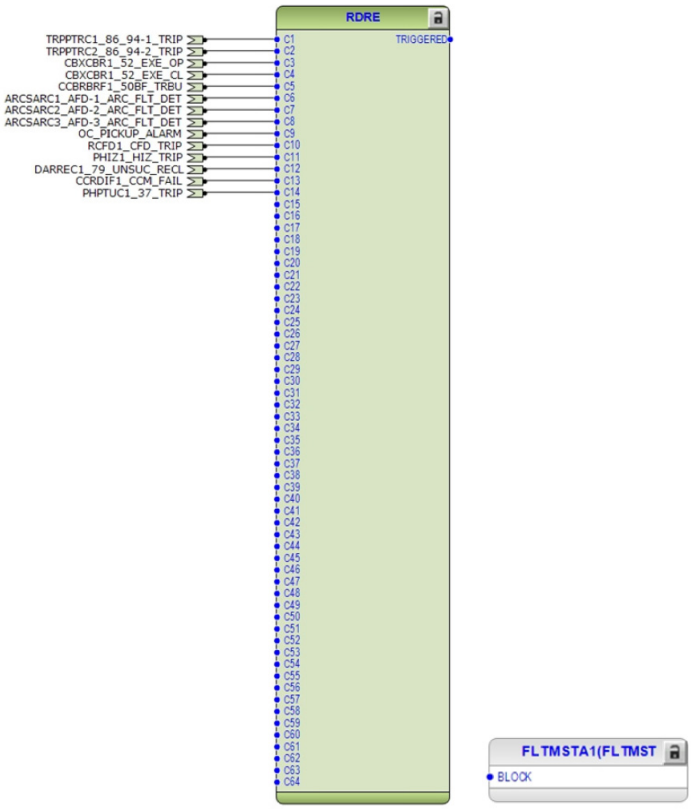

Figure 25: *64 channel Disturbance and fault recorder*

3.3.12 Functional diagrams for I/O and Alarm LEDs

The default binary I/O connected in the configuration and Alarm LEDs are indicated in Figure 26 to Figure 29 titled: Binary inputs, Binary outputs, Alarm LEDs 1 – 5, and Alarm LEDs 6 – 11

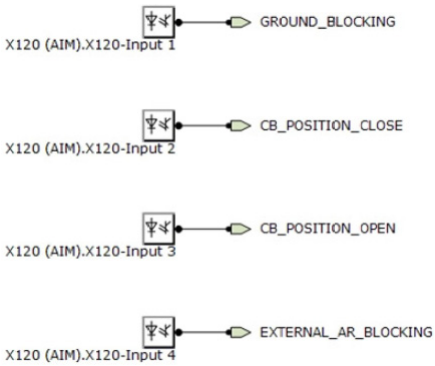

Figure 26: *Binary inputs*

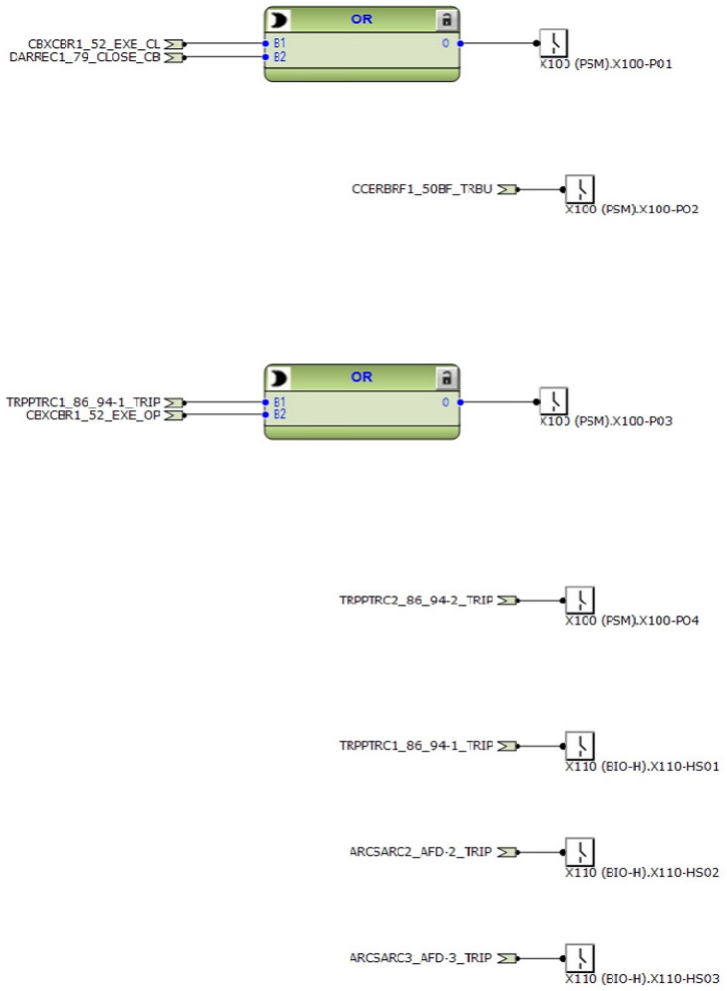

Figure 27: Binary outputs

High speed binary outputs (HSO) are available only if IED with High speed binary card has been ordered.

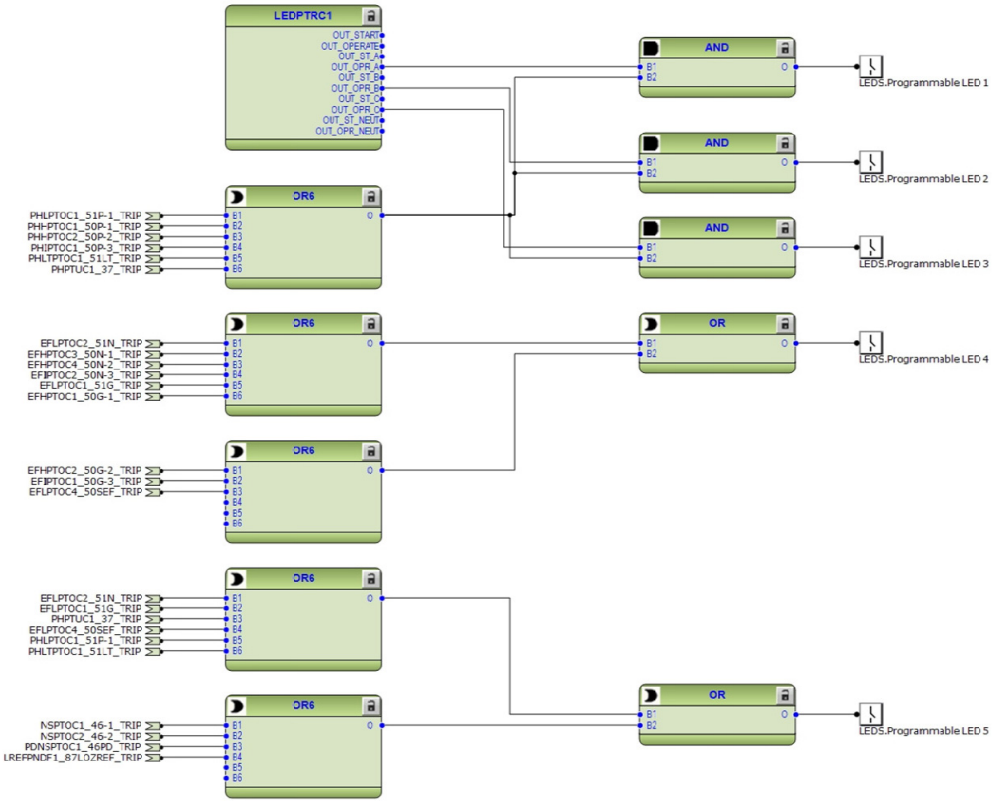

Figure 28: *Alarm LEDs 1 – 5*

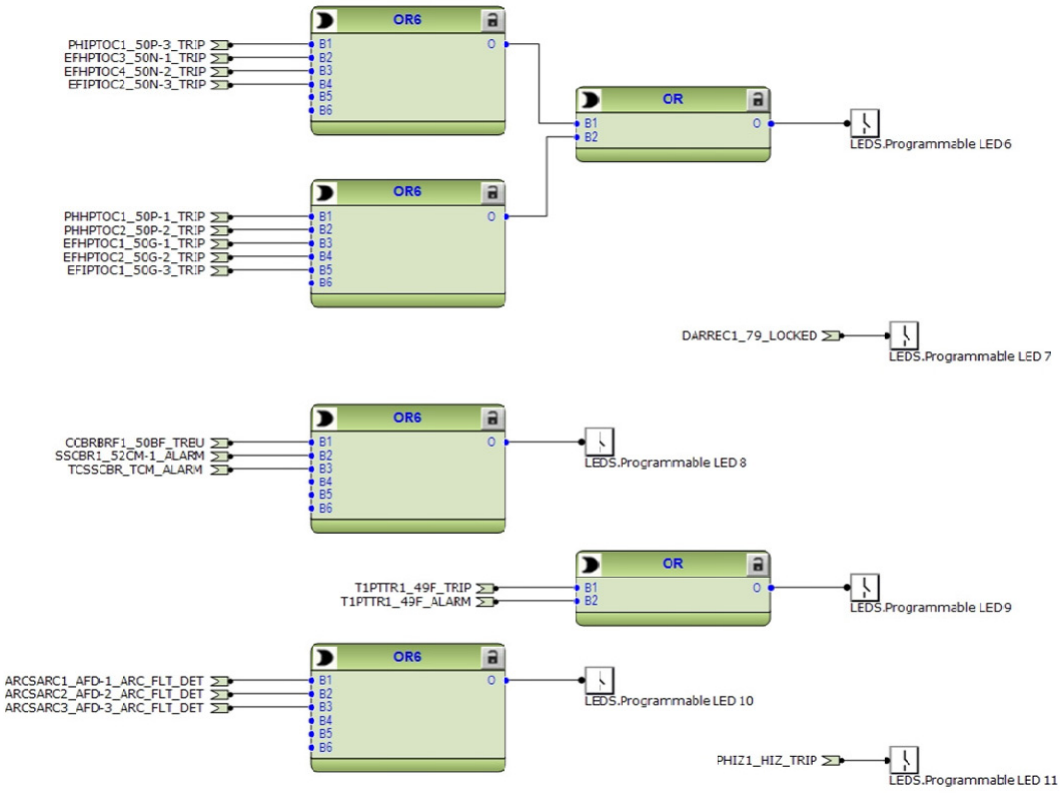

Figure 29: *Alarm LEDs 6 – 11*

3.4 Standard Configuration for Order Code Functional Applications B

3.4.1 Applications

This standard configuration is mainly intended for two distribution feeders and two breakers. With the numerous non-directional phase and ground overcurrent elements, this configuration can also be applied for high-side and low-side transformer backup protection and automatic bus transfer schemes.

The IED with this standard configuration is delivered from the factory with default settings and parameters. The end-user flexibility for incoming, outgoing and internal signal designation within the IED enable this configuration to be further adapted to different primary power system layouts and the related functionality needs by modifying the internal functionality using PCM600.

3.4.2 Functions

Table 15: Functions included in the REF615 standard configuration

Software Configuration				B
Function	IEC 61850	ANSI C37.2-2008	IEC 60617	BA
Protection				
Three-phase non-directional overcurrent protection, low stage, instance 1	PHLPTOC1	51P-1	3I> (1)	●
Three-phase non-directional overcurrent protection, low stage, instance 2	PHLPTOC2	51P-2	3I> (2)	●
Three-phase non-directional overcurrent protection, high stage, instance 1	PHHPTOC1	50P-1	3I>> (1)	●
Three-phase non-directional overcurrent protection, high stage, instance 2	PHHPTOC2	50P-2	3I>> (2)	●
Three-phase non-directional overcurrent protection, high stage, instance 3	PHHPTOC3	50P-4	3I>> (3)	●
Three-phase non-directional overcurrent protection, high stage, instance 4	PHHPTOC4	50P-5	3I>> (4)	●
Non-directional ground-fault protection, low stage, instance 1	EFLPTOC1	51G	Io> (1)	●
Non-directional ground-fault protection, low stage, instance 2	EFLPTOC2	51N-1	Io> (2)	●
Non-directional ground-fault protection, low stage, instance 3	EFLPTOC3	51N-2	Io> (3)	●
Non-directional ground-fault protection, high stage, instance 1	EFHPTOC1	50G-1	Io>> (1)	●
Non-directional ground-fault protection, high stage, instance 3	EFHPTOC3	50N-1	Io>> (3)	●
Non-directional ground-fault protection, high stage, instance 4	EFHPTOC4	50N-2	Io>> (4)	●
Non-directional ground-fault protection, high stage, instance 5	EFHPTOC5	50N-4	Io>> (5)	●
Non-directional ground-fault protection, high stage, instance 6	EFHPTOC6	50N-5	Io>> (6)	●
Negative-sequence overcurrent protection, instance 1	NSPTOC1	46-1	I2> (1)	●
Negative-sequence overcurrent protection, instance 2	NSPTOC2	46-2	I2> (2)	●
Three-phase thermal protection for feeders, cables and distribution transformers, Instance 1	T1PTTR1	49F-1	3Ith>F (1)	●
Three-phase thermal protection for feeders, cables and distribution transformers, Instance 2	T1PTTR2	49F-2	3Ith>F (2)	●
Circuit breaker failure protection, instance 1	CCBRBRF1	50BF-1	3I>/Io>BF (1)	● 1)
Circuit breaker failure protection, instance 2	CCBRBRF2	50BF-2	3I>/Io>BF (2)	● 1)
Three-phase inrush detector, instance 1	INRPHAR1	INR-1	3I2f> (1)	●
Three-phase inrush detector, instance 2	INRPHAR2	INR-2	3I2f> (2)	●
Master trip, instance 1	TRPPTRC1	86/94-1	Master Trip (1)	●

Software Configuration				B
Function	IEC 61850	ANSI C37.2-2008	IEC 60617	BA
Master trip, instance 2	TRPPTRC2	86/94-2	Master Trip (2)	•
Arc protection, instance 1	ARCSARC1	AFD-1	ARC (1)	•
Arc protection, instance 2	ARCSARC2	AFD-2	ARC (2)	•
Arc protection, instance 3	ARCSARC3	AFD-3	ARC (3)	•
Loss of phase, instance 1	PHPTUC1	37-1	3I< (1)	•
Loss of phase, instance 2	PHPTUC2	37-2	3I< (2)	•
Control				
Circuit-breaker control, instance 1	CBXCBR1	52-1	I <-> O CB (1)	•
Circuit-breaker control, instance 2	CBXCBR2	52-2	I <-> O CB (2)	•
Condition Monitoring				
Circuit-breaker condition monitoring, instance 1	SSCBR1	52CM-1	CBCM (1)	•
Circuit-breaker condition monitoring, instance 2	SSCBR2	52CM-2	CBCM (2)	•
Trip circuit supervision, instance 1	TCSSCBR1	TCM-1	TCS (1)	•
Trip circuit supervision, instance 2	TCSSCBR2	TCM-2	TCS (2)	•
Measurement				
Three-phase current measurement, instance 1	CMMXU1	IA, IB, IC	3I	•
Three-phase current measurement, instance 2	CMMXU2	IA, IB, IC (2)	3I(B)	•
Sequence current measurement, instance 1	CSMSQI1	I1, I2, I0	I1, I2, I0	•
Sequence current measurement, instance 2	CSMSQI2	I1, I2, I0 (2)	I1, I2, I0(B)	•
Residual current measurement, instance 1	RESCMMXU1	IG	Io	•
Current total demand distortion, instance 1	CMHAI1	PQI-1	PQM3I	•
Current total demand distortion, instance 2	CMHAI2	PQI-2	PQM3I(B)	•
Other functions				
Minimum pulse timer (2 pcs), instance 1	TPGAPC1	TP 1	TP (1)	•
Minimum pulse timer (2 pcs), instance 2	TPGAPC2	TP 2	TP (2)	•
Minimum pulse timer (2 pcs), instance 3	TPGAPC3	TP 3	TP (3)	•
Minimum pulse timer (2 pcs), instance 4	TPGAPC4	TP 4	TP (4)	•
Minimum pulse timer (2 pcs, second resolution), instance 1	TPSGAPC1	62CLD-1	TPS (1)	•
Minimum pulse timer (2 pcs, second resolution), instance 2	TPSGAPC2	62CLD-3	TPS (2)	•
Minimum pulse timer (2 pcs, minute resolution), instance 1	TPMGAPC1	62CLD-2	TPM (1)	•
Minimum pulse timer (2 pcs, minute resolution), instance 2	TPMGAPC2	62CLD-4	TPM (2)	•

Software Configuration				B
Function	IEC 61850	ANSI C37.2-2008	IEC 60617	BA
Pulse timer (8 pcs), instance 1	PTGAPC1	PT-1	PT (1)	•
Pulse timer (8 pcs), instance 2	PTGAPC2	PT-2	PT (2)	•
Time delay off (8 pcs), instance 1	TOFGAPC1	TOF-1	TOF (1)	•
Time delay off (8 pcs), instance 2	TOFGAPC2	TOF-2	TOF (2)	•
Time delay on (8 pcs), instance 1	TONGAPC1	TON -1	TON (1)	•
Time delay on (8 pcs), instance 2	TONGAPC2	TON -2	TON (2)	•
Set reset (8 pcs), instance 1	SRGAPC1	SR-1	SR (1)	•
Set reset (8 pcs), instance 2	SRGAPC2	SR-2	SR (2)	•
Move (8 pcs), instance 1	MVGAPC1	MV-1	MV (1)	•
Move (8 pcs), instance 2	MVGAPC2	MV-2	MV (2)	•
Logging functions				
Disturbance recorder	RDRE1	DFR	-	•
Fault recorder	FLMSTA1	FR	-	•
Sequence event recorder	SER	SER	-	•

1) Calculated neutral current is always used

3.4.3 Default I/O connections

Table 16: Default connections for binary inputs

Binary input	Default usage	Connector pins
X110-BI1		X110-1,2
X110-BI2		X110-3,4
X110-BI3		X110-5,6
X110-BI4		X110-7,6
X110-BI5	Circuit Breaker 2 close status	X110-8,9
X110-BI6	Circuit Breaker 2 open status	X110-10,9
X110-BI7	Circuit Breaker 1 close status	X110-11,12
X110-BI8	Circuit Breaker 1 open status	X110-13,12

Table 17: Default connections for binary outputs

Binary output	Default usage	Connector pins
X100-PO1	Close circuit breaker (1)	X100 – 6,7
X100-PO2	Close circuit breaker (2)	X100 – 8,9
X100-SO1	Breaker failure backup trip (1) and (2) to upstream breaker	
X100-SO2		
X100-PO3	Open circuit breaker(1) / Breaker Trip (1)	X100 – 15,16,17,18,19
X100-PO4	Open circuit breaker(2) / Breaker Trip (2)	X100 – 20,21,22,23,24
X110-SO1		X110-14,15,16
X110-SO2		X110-17,18,19
X110-SO3		X110-20,21,22
X110-SO4		X110-23,24

*Table 18: High speed binary output connections**

Binary output	Default usage	Connector pins
X110-HSO1	Open circuit breaker (1) / Breaker Trip (1)	X110 – 15,16
X110-HSO2	Open circuit breaker (2) / Breaker Trip (2)	X110 – 19,20
X110-HSO3	Trip from ARC-3 protection	X110 – 23,24
*Available only if IED has been ordered with High speed binary output (HSO) card		

Table 19: Default connections for LEDs

LED	LED label
LED 1	Phase A
LED 2	Phase B
LED 3	Phase C
LED 4	Neutral / Ground
LED 5	Time
LED 6	Instantaneous
LED 7	Breaker 1 Failure/Alarm
LED 8	Breaker 2 Failure/Alarm
LED 9	Overload Alarm/Trip
LED 10	Arc Flash Detection
LED 11	Undercurrent

Some of the alarm led channel connections in the standard configuration depends on the optional functionality and are available according to ordercode.

3.4.4 Typical connection diagrams

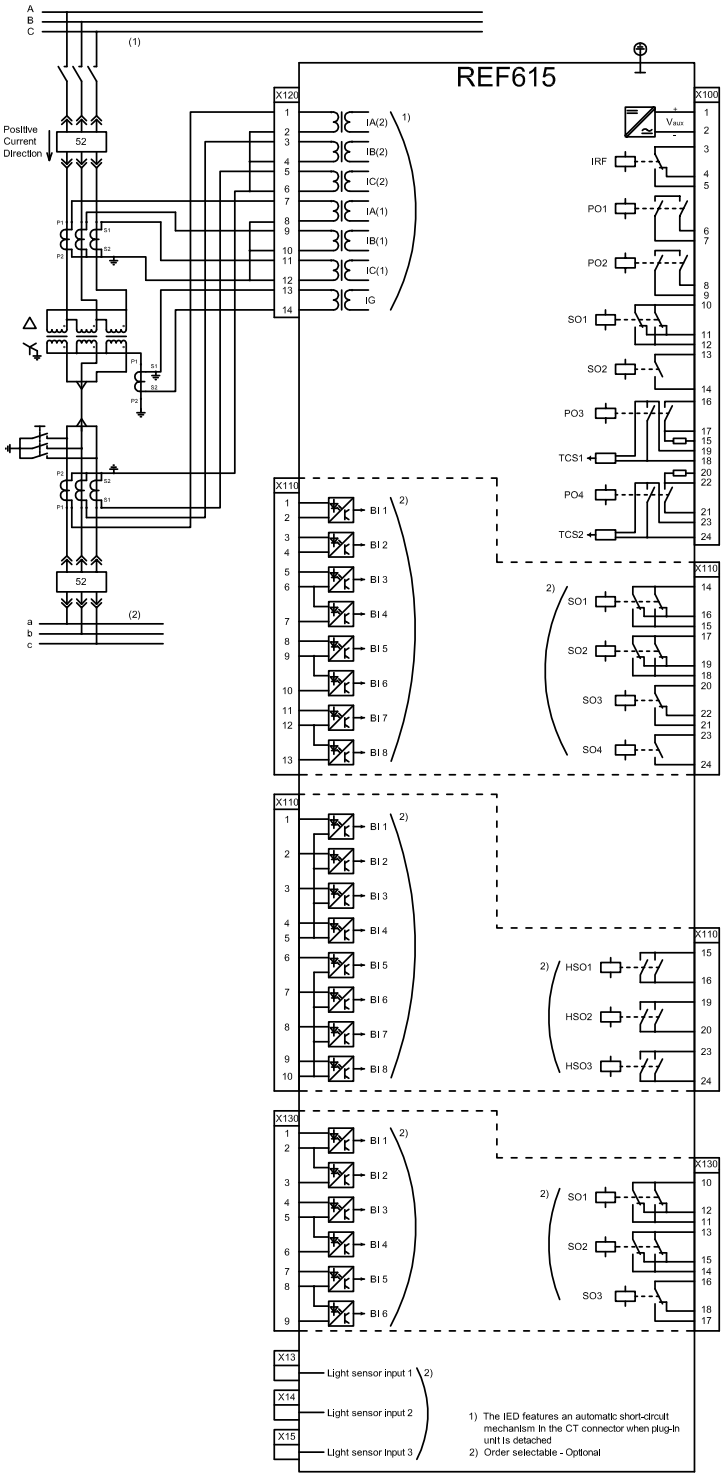

3.4.5 Functional diagrams

The functional diagrams describe the default input, output, alarm LED and function-to-function connections. The default connections can be viewed with and changed with PCM 600 according to the application requirements, if necessary.

The analog channels, measurements from CTs, have fixed connections to the different function blocks inside the IED's standard configuration.

The signal marked with IA, IB and IC represents the three phase currents. The signal IG represents the measured ground current.

The signal marked with (1) and (2) represents the voltage levels e.g. in transformer application or in the dual feeder system it represents the name of the feeder.

REF615 offers six different settings group which the user can set based on individual needs. Each group can then, be activated/ deactivated by using the setting group settings available in REF615.

3.4.6 Functional diagrams for protection

The functional diagrams describe the IED's protection functionality in detail and according to the factory set default connections.

Three stages of three-phase overcurrent protection (51P-1, 50P-1 and 50P-2) functions are provided for overcurrent and short-circuit protection of feeder (1) and respectively (51P-2, 50P-4 and 50P-5) functions for feeder (2). The non directional high stage (50P-1) or (50P-4) will be blocked by cold load detection logic according to the feeder to be protected. The cold load detection logic starts from closing of the corresponding feeder circuit breaker and is active during set time. The cold load detection logic´s active time can be set in a resolution of minutes or seconds to the functions TPSGAPC and TPMGAPC.

The inrush detection block's (INR-1) output BLK2H offers the possibility to either block the function or multiply the active settings for any of the shown protection function blocks.

Preselected trip signals are connected to the Breaker Trip of the corresponding feeder and also to the alarm LEDs. Alarm LEDs 1, 2 and 3 are used for phase segregated information of current based faults. The alarm LED5 is used to indicate time delayed trips and the alarm LED6 instantaneous trips of the current based protection functions.

The pickup information of all overcurrent functions is collected to the variable OC_PICKUP_ALARM and connected to the disturbance recorder. This signal can be mapped to the signal outputs depending on the application needs.

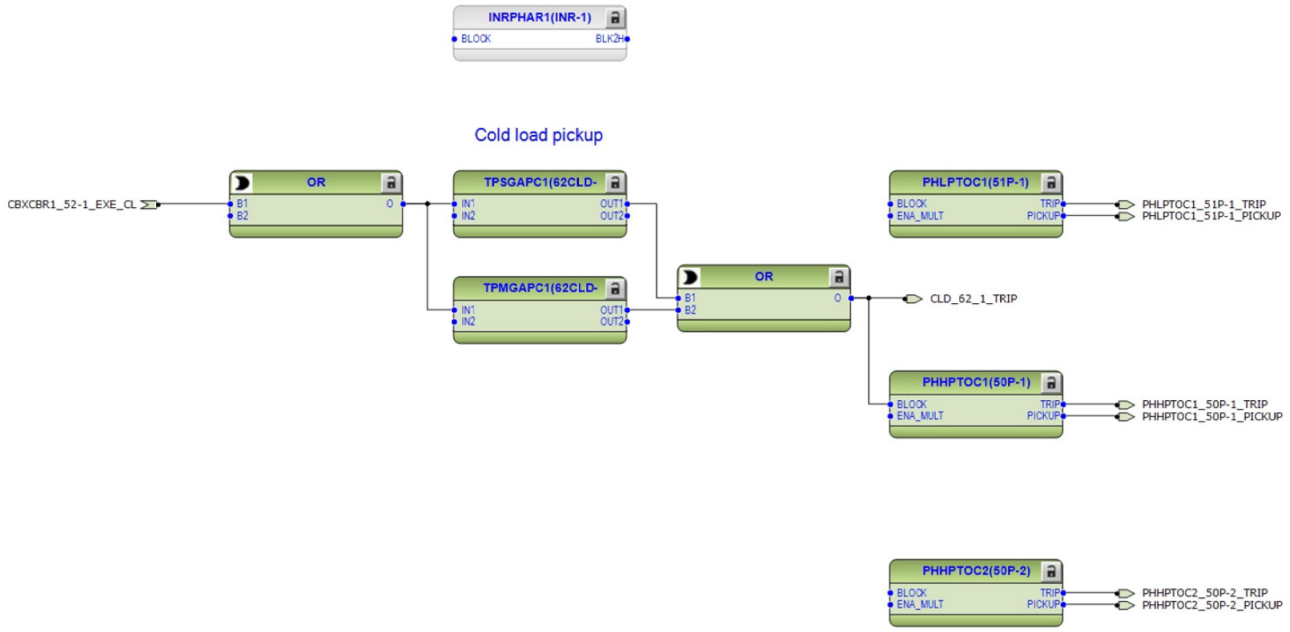

Figure 30: *Three phase overcurrent protection and cold load detection for feeder (1)*

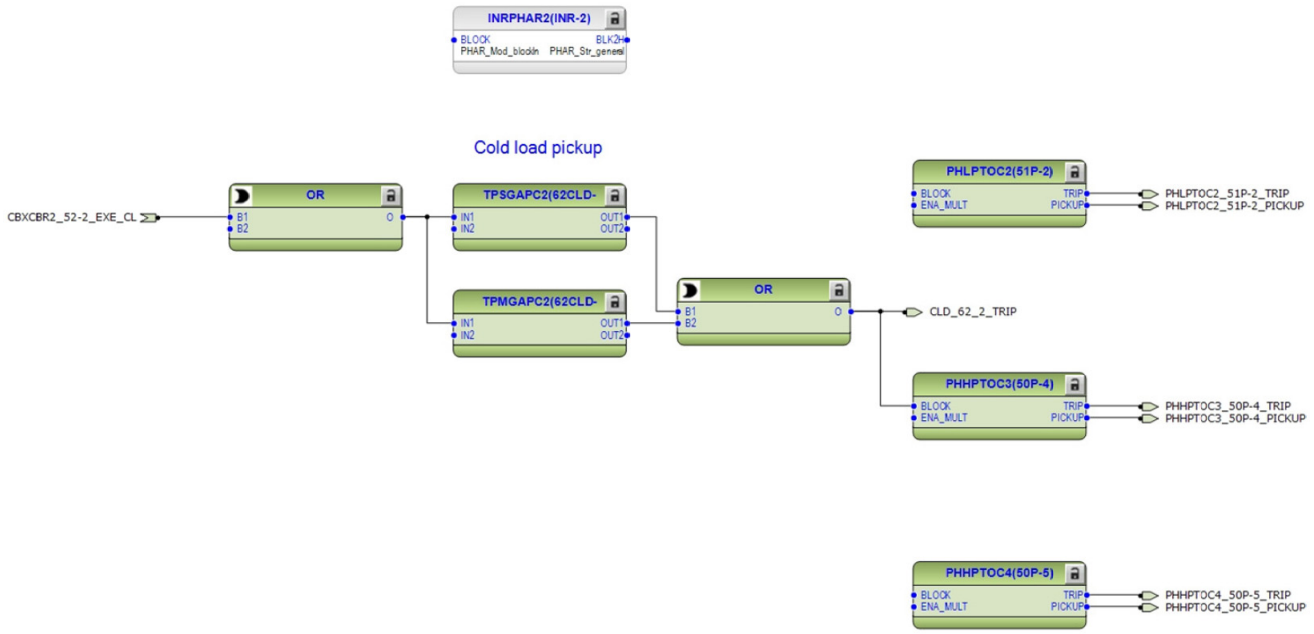

Figure 31: *Three phase overcurrent protection and cold load detection for feeder (2)*

The undercurrent protection functions (37-1 and 37-2) are offered for protection against loss of phase situations. The trip signal is connected to the disturbance recorder only by default.

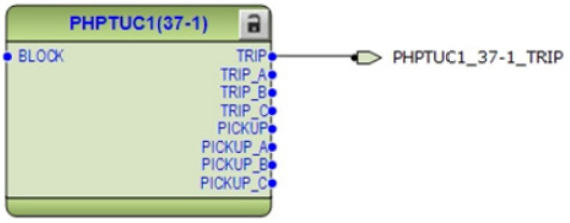

Figure 32: *Undercurrent protection for feeder (1)*

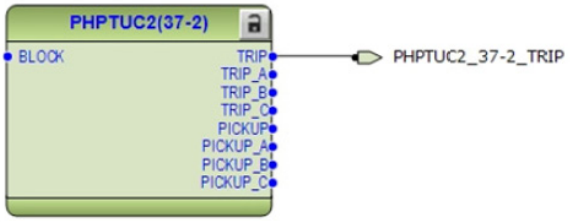

Figure 33: *Undercurrent protection for feeder (2)*

Three stages are provided to non-directional neutral overcurrent protection. The neutral overcurrent protection uses calculated residual current component. Functions 51N-1, 50N-1 and 50N-2 are intended for the protection of the feeder (1) and functions 51N-2, 50N-4 and 50N-5 for the protection of the feeder (2)

The operation of 51N-1, 51N-2, 50N-2 and 51N-5 will not be blocked as a default. The 50N-1 and 50N-4 will be blocked if the corresponding cold load detection logic is activated. The operation of neutral overcurrent protection functions is connected to alarm LED 4.

The alarm LED5 is used to indicate time delayed trips and the alarm LED6 instantaneous trips of the current based protection functions.

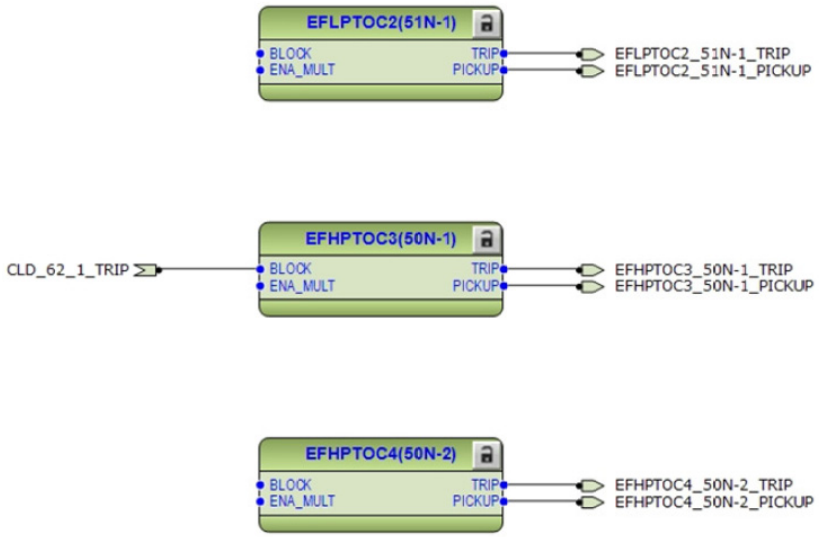

Figure 34: Non-directional neutral overcurrent protection for feeder (1)

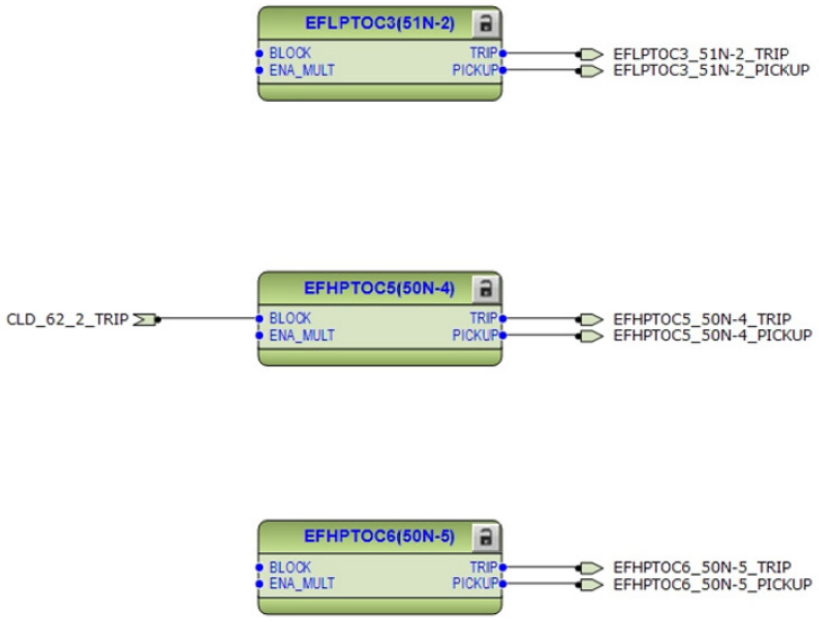

Figure 35: Non-directional neutral overcurrent protection for feeder (2)

Two non-directional ground-fault protection (51G and 50G-1) stages are provided to detect phase to-ground faults that may be a result of, for example, insulation ageing or sudden failure of insulation.

The operation of 51G is not blocked as default by any functionality. However the operation of the 50G-1 is blocked by the cold load detection of the sides (1) or (2). The operation of ground-fault protection functions is connected to alarm LED 4.

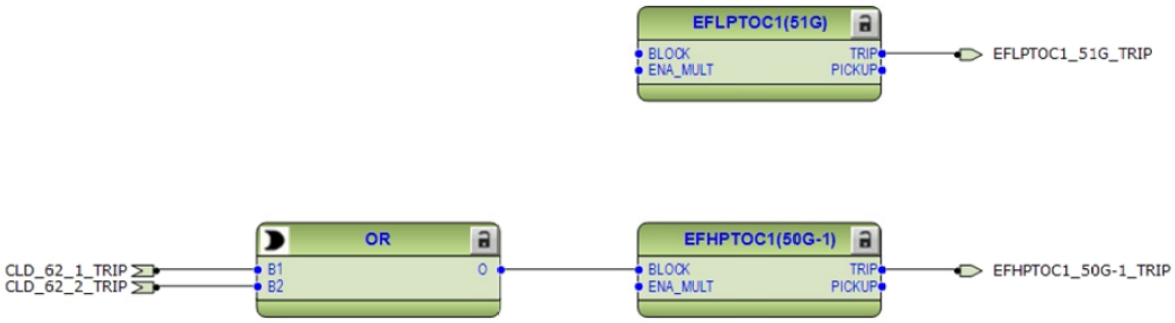

Figure 36: Non-directional ground fault protection

Negative-sequence overcurrent protection (46-1 and 46-2) stages are provided for phase unbalance protection. These functions are used to protect the feeders against phase unbalance caused by, for example, a broken conductor.

The operation of 46-1 and 46-2 are not blocked as default by any functionality. The operation of these protection functions is connected to alarm LED 5.

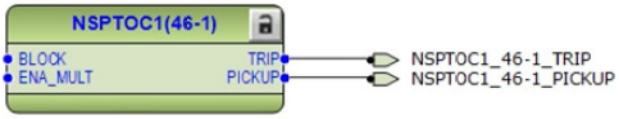

Figure 37: Negative sequence protection for feeder (1)

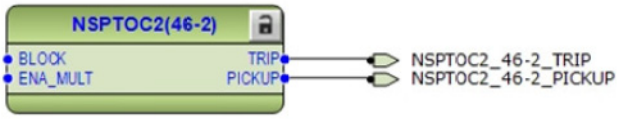

Figure 38: Negative sequence protection for feeder (2)

All overcurrent pickup signals are merged together as variable OC_PICKUP_ALARM(1) and (2) according to the protected feeder. These alarms are by default connected to disturbance recorder channel. Those can be mapped also e.g. for alarming or blocking purposes to the binary output relays.

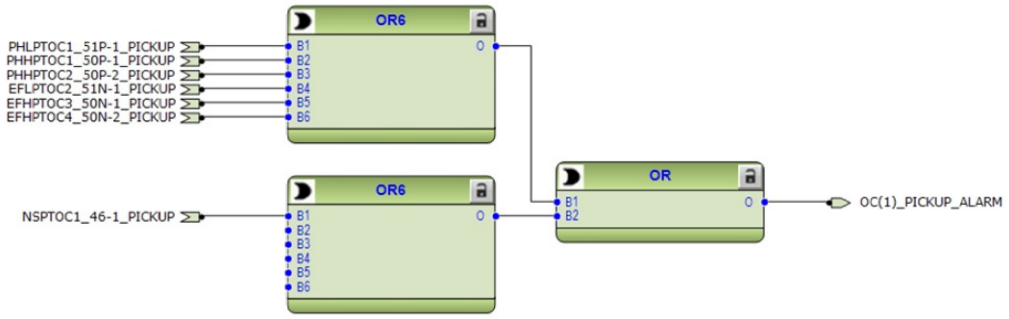

Figure 39: *Overcurrent pickup alarm for feeder (1)*

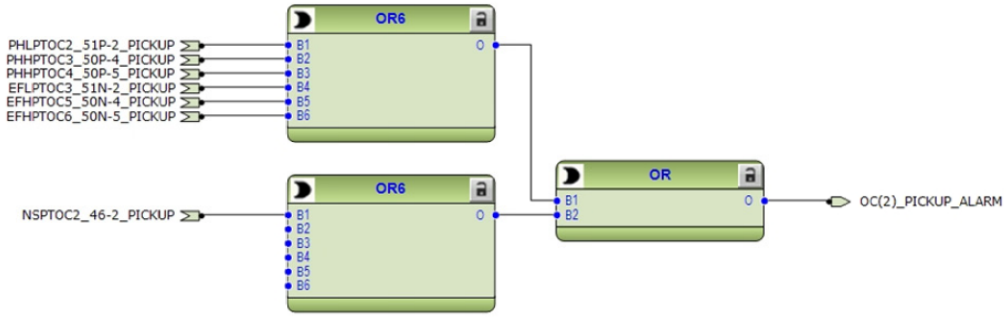

Figure 40: *Overcurrent pickup alarm for feeder (2)*

The thermal overload protection functions (49F-1) and (49F-2) detects short and long term overloads under varying load conditions.

The trip of the thermal overload protection functions are connected to the Breaker Trip1 and 2 according to the protected feeder. The alarm and trip signals are connected to alarm LED 9.

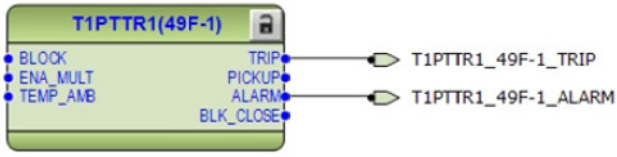

Figure 41: *Thermal overload protection for feeder (1)*

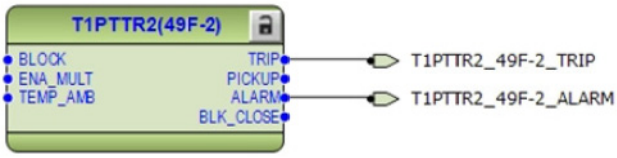

Figure 42: *Thermal overload protection for feeder (2)*

Two instances of the circuit breaker failure protection are offered as per protected feeder. The circuit-breaker failure protection (50BF) is initiated via the PICKUP input by a number of different protection functions in the IED. 50BF offers different operating modes associated with the circuit-breaker position and the measured phase and residual currents.

50BF has two operating outputs: TRRET and TRBU. The TRBU output is used to give a backup trip to the circuit breaker feeding upstream. For this purpose, the TRBU operate output signal is connected to the output PO2 (X100: 8-9).

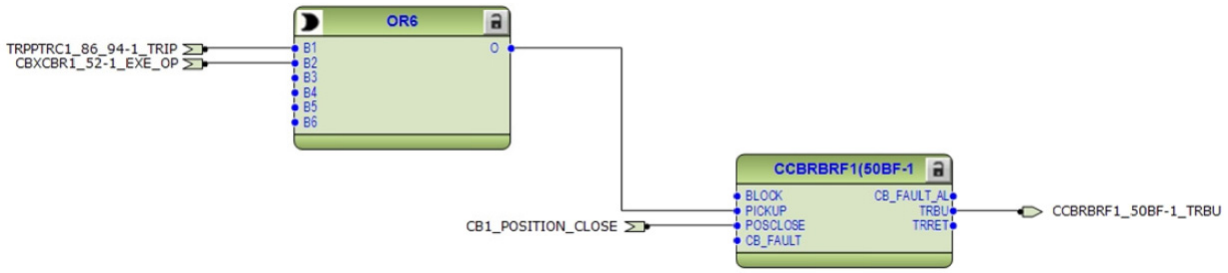

Figure 43: Circuit breaker failure protection for feeder (1)

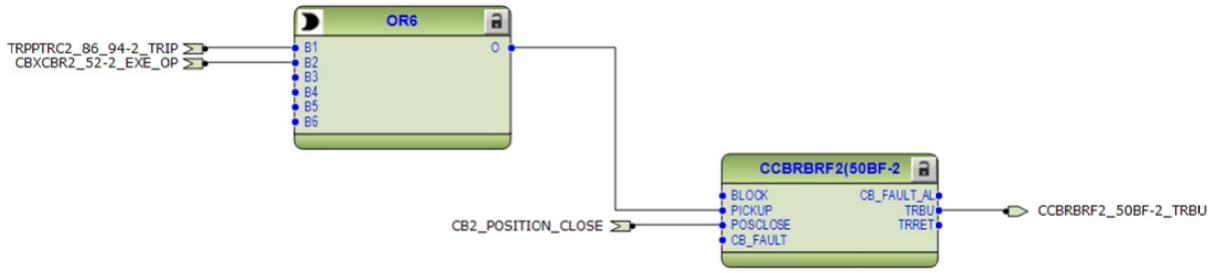

Figure 44: Circuit breaker failure protection for feeder (2)

The TRRET operate output can be used for retripping its own circuit breaker through the Breaker Trip again. However this is not connected in present configuration.

Three arc protection (AFD-1, AFD-2 and AFD-3) stages are included as an optional function. The arc protection offers individual function blocks for three ARC sensors that can be connected to the IED. Each arc protection function block has two different operation modes, with or without the phase and residual current check.

Trip signal from AFD-1 is connected to Breaker trip 1, available at PO3 (X100: 15-19). Whereas the trip signal from AFD-2 is connected to Breaker trip 2, available at PO4 (X100: 20-24). The fault detection of these protection functions is connected to alarm LED 10.

If the IED has been ordered with high speed binary outputs, then trip signal from AFD-1 and AFD-2 are connected to high speed output HSO1 (X110:15-16) and HSO2(X110:19-20) respectively and AFD-3 is connected directly to high speed output HSO3 (X110:23-24).

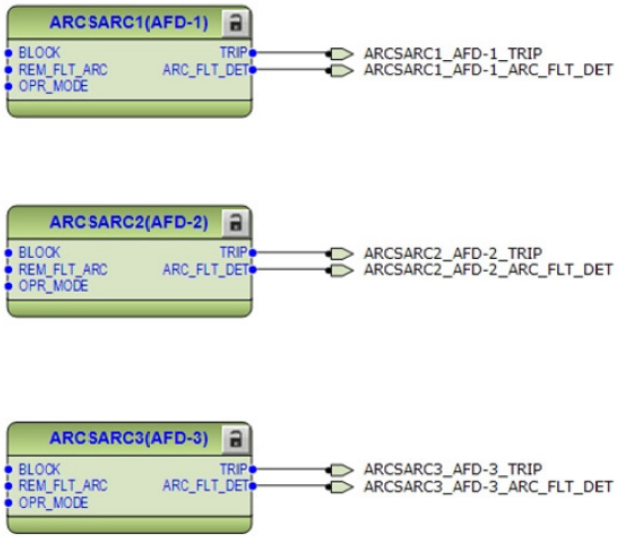

Figure 45: Arc protection

Two master trip logics (86/94-1 and 86/94-2) are provided as a merging unit of trip commands. 86/94-1 collects the trip signals from 46-1, 49F-1, 50P-1, 50P-2, 50N-1, 50N-2, 50G-1, 51P-1, 51N-1, 51G and AFD-1 protection functions and is connected to trip output contact PO3 (X100:16-19) and also to high speed output HS01 (X110:15-16) for IEDs ordered with high speed binary output cards.

Open control commands to the circuit breaker from the local or remote is also connected directly to the output PO3 (X100:16-19) from circuit breaker control (52) function block.

86/94-2 collects the trip signals from 46-2, 49F-2, 50P-4, 50P-5, 50N-4, 50N-5, 50G-1, 51P-2, 51N-2, 51G and AFD-2 protection functions and is connected to trip output contact PO4 (X100:20-24) and also to high speed output HS02 (X110:19-20) for IEDs ordered with high speed binary output cards.

86/94-1 and 86/94-2 provides the lockout/latching function, event generation and the trip signal duration setting. If the lockout operation mode is selected, one binary input can be reassigned to the RST_LKOUT input of the Master Trip to enable external reset with a push button.

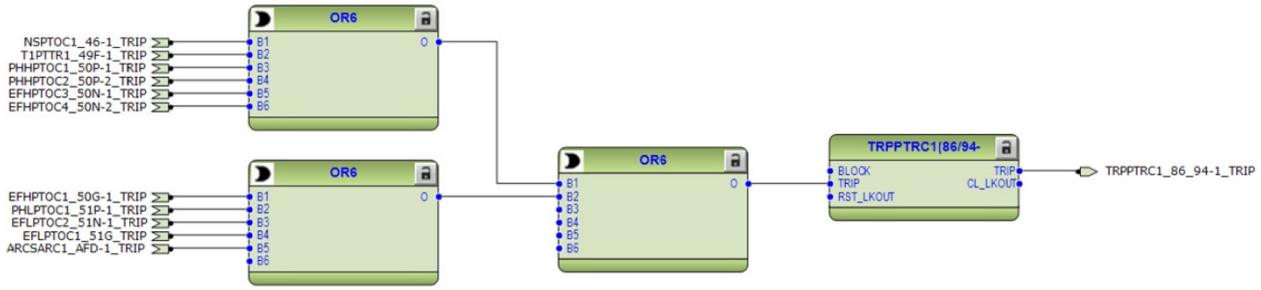

Figure 46: *Trip logic for breaker 1*

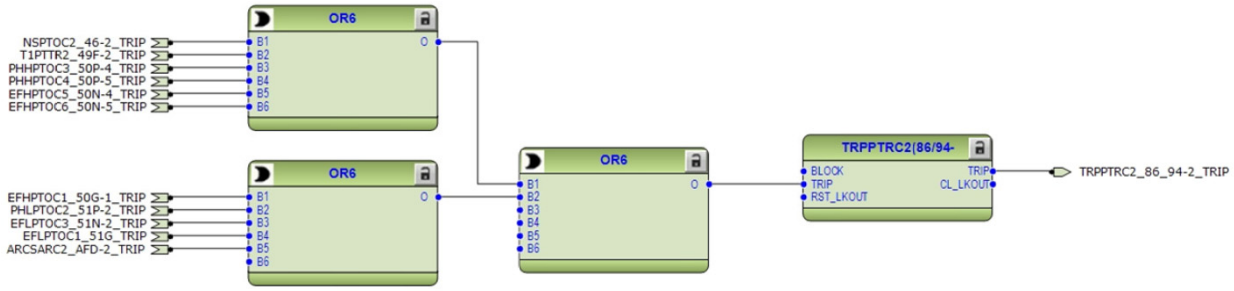

Figure 47: *Trip logic for breaker 2*

3.4.7 Functional diagrams for control functions

The circuit breaker closing is enabled when the ENA_CLOSE input is activated. The input can be activated by the configuration logic, which is e.g. a combination of the disconnector or breaker truck and ground switch position status and the status of the Breaker Trip logic and gas pressure alarm and circuit-breaker spring charging. With the present configuration, the activation of ENA_CLOSE input is configured using only Breaker Trip logic 86/94-1 or 86/94-2 according to the breaker of the feeder to be operated. By this way the circuit breaker cannot be closed in case the trip is active.

The ITL_BYPASS input can be used, for example, to always enable the closing of the circuit breaker when the circuit breaker truck is in the test position, despite of the interlocking conditions being active when the circuit breaker truck is closed in service position.

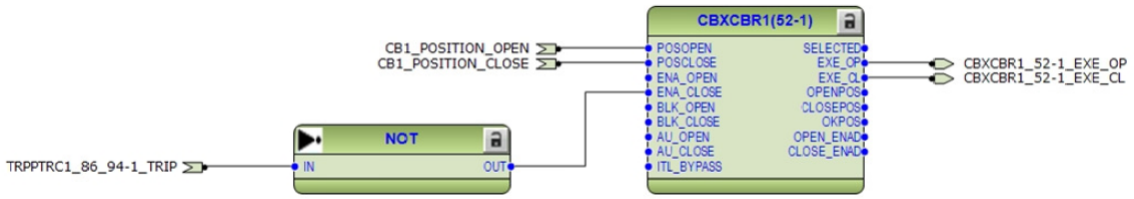

Figure 48: *Circuit breaker (1) control*

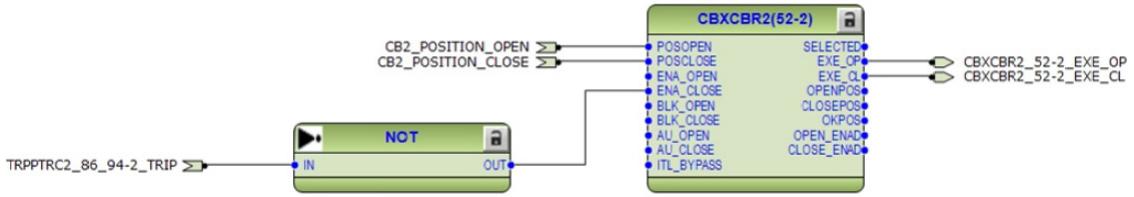

Figure 49: *Circuit breaker (2) control*

If the ENA_CLOSE and BLK_CLOSE signals are completely removed from the breaker control function block 52 with PCM600, the function assumes that the breaker close commands are allowed continuously.

3.4.8 Functional diagrams for condition monitoring

Two trip circuit monitoring (TCM-1 and TCM-2) stages are provided to supervise the trip circuit of the circuit breaker connected at PO3 (X100:15-19) and PO4 (X100:20-24).

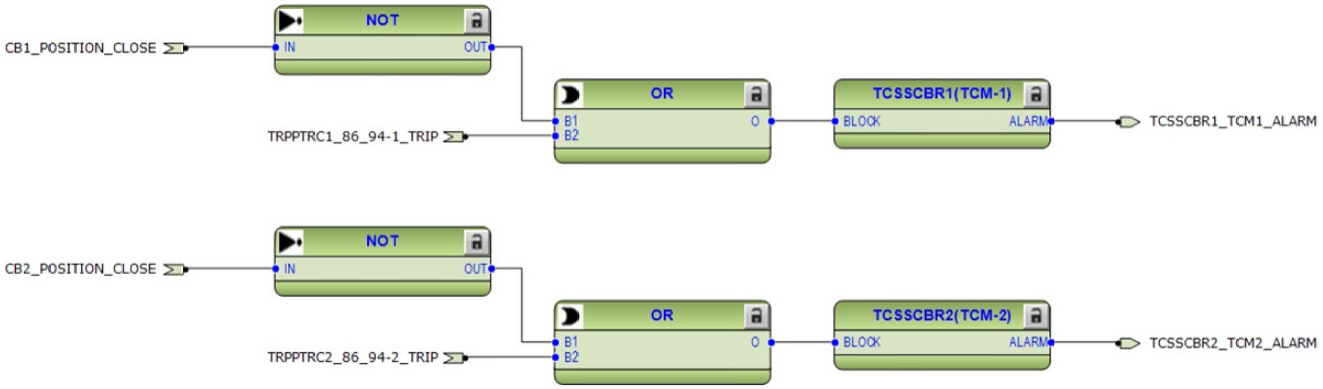

Figure 50: *Trip circuit monitoring*

The TCM-1 function is blocked by 86/94-1 and the circuit-breaker open position signal. The TCM-2 function is blocked respectively by 86/94-2 and the circuit-breaker open position signal.

By default it is expected that there is no external resistor in the circuit breaker tripping/closing coil circuit connected parallel with circuit breaker normally open/closed auxiliary contact.

The circuit breaker condition monitoring functions (52CM-1 and 52CM-2) supervises the circuit breaker status based on the binary input information connected and measured current levels. The function introduces various supervision alarms. The 52CM-1 is intended for the circuit breaker of the feeder (1) and the 52CM-2 is respectively for circuit breaker of the feeder (2). Collective alarm outputs of the functions are connected to alarm LED7.

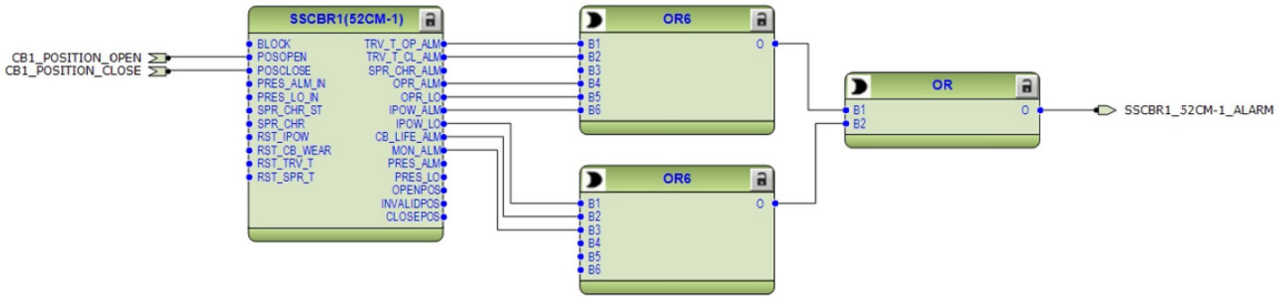

Figure 51: *Circuit breaker (1) condition monitoring*

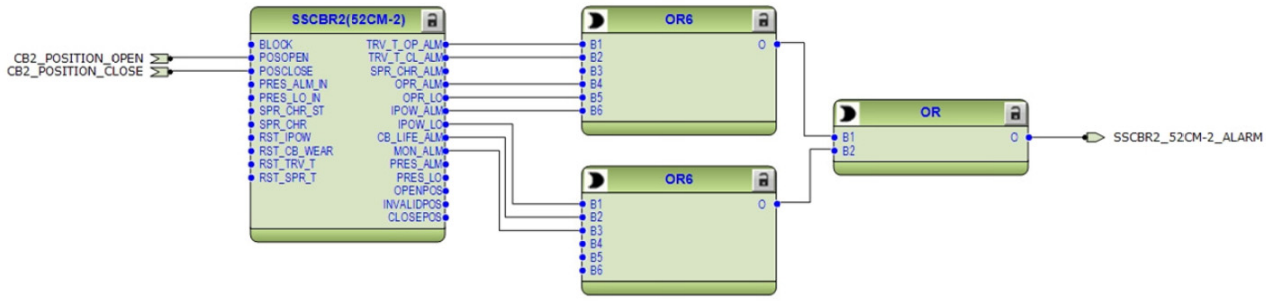

Figure 52: *Circuit breaker (2) condition monitoring*

3.4.9 Functional diagrams for Measurements

The phase current inputs to the IED are measured by three-phase current measurement (IA, IB, IC) function block respectively for both feeders (1) and (2). The current input is

connected to the X120 card in the back panel. Similarly the sequence and residual current are measured by sequence current measurement (I1, I2, I0) and ground current measurement (IG) function blocks.

The measurements can be seen from the LHMI and is available using the measurement option in the menu selection. Based on the settings, IA, IB, IC and IG function blocks can generate low alarm/warning, high alarm/warning signals for the measured current values.

The power quality function (PQI-1) is used to measure the harmonic contents of the phase current. This functionality is included according to ordercode selection.

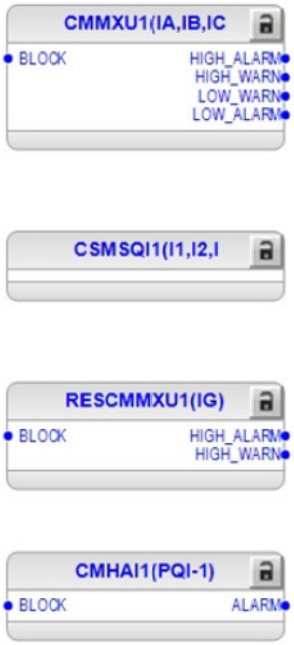

Figure 53: Current measurements for feeder (1)

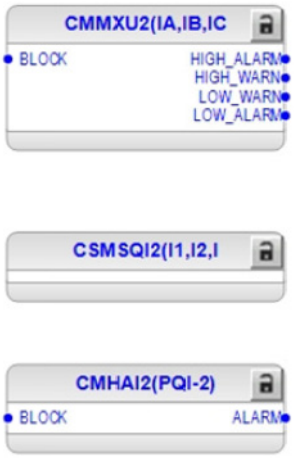

Figure 54: Current measurements for feeder (2)

3.4.10 Functional diagrams for other functions

Configuration also includes other miscellaneous basic functions which are not configured, but can be used for creating general purpose logics. These functions include:

- Four instance of Minimum Pulse Timer TP-1, TP-2, TP-3 and TP-4,
- Two instance of Pulse Timer PT-1 and PT-2,
- Two instance of Time delay off TOF-1 and TOF-2,
- Two instance of Time delay on TON-1 and TON-2,
- Two instance of Set reset logic SR-1 and SR-2 and
- Two instance of Move logic MV-1 and MV-2

3.4.11 Functional diagrams for logging functions

The disturbance recorder DFR consists of 64 channels. However as default few channel are connected to trigger the digital fault recorder are as shown in Figure 55. More connection can be made as per individual need. Also when disturbance recorder is trigger the analog values available at the analog inputs are recorded by fault recorder FR.

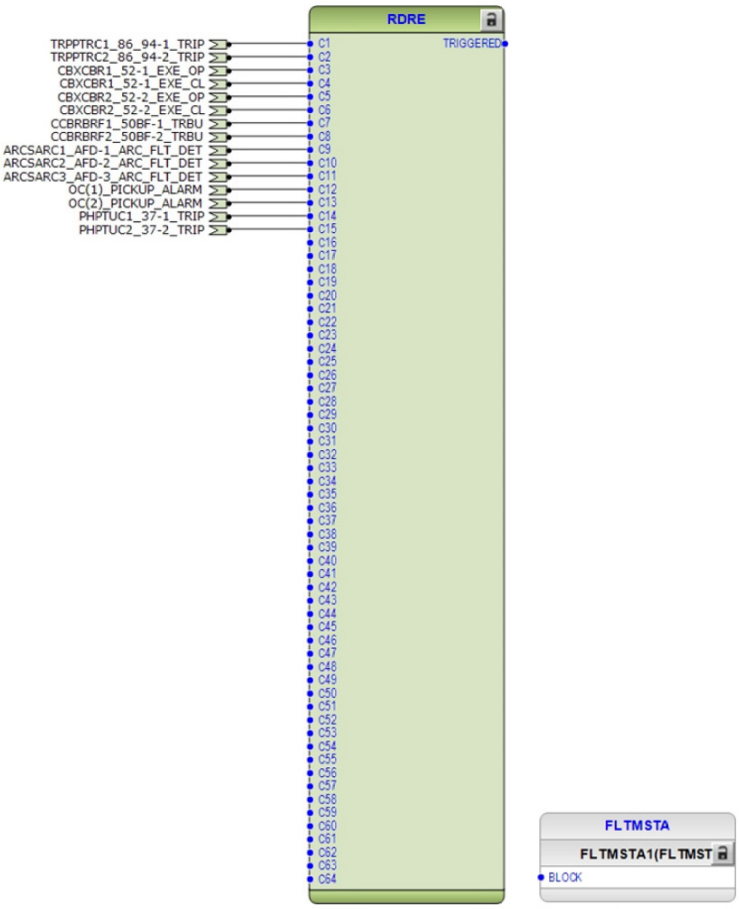

Figure 55: 64 channel Disturbance and fault recorder

3.4.12 Functional diagrams for I/O and Alarm LEDs

The default binary I/O connected in the configuration and Alarm LEDs are indicated in Figure 56 to Figure 59.

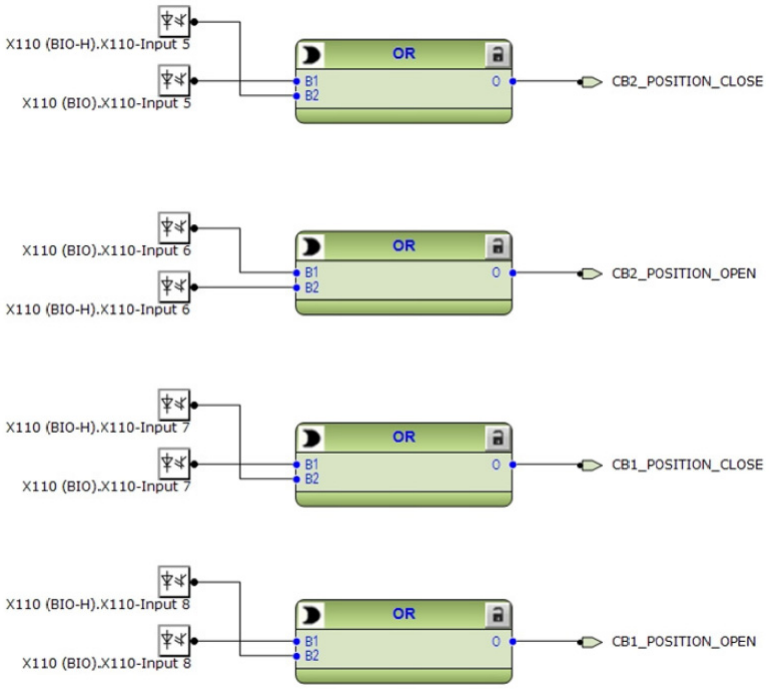

Figure 56: Binary inputs

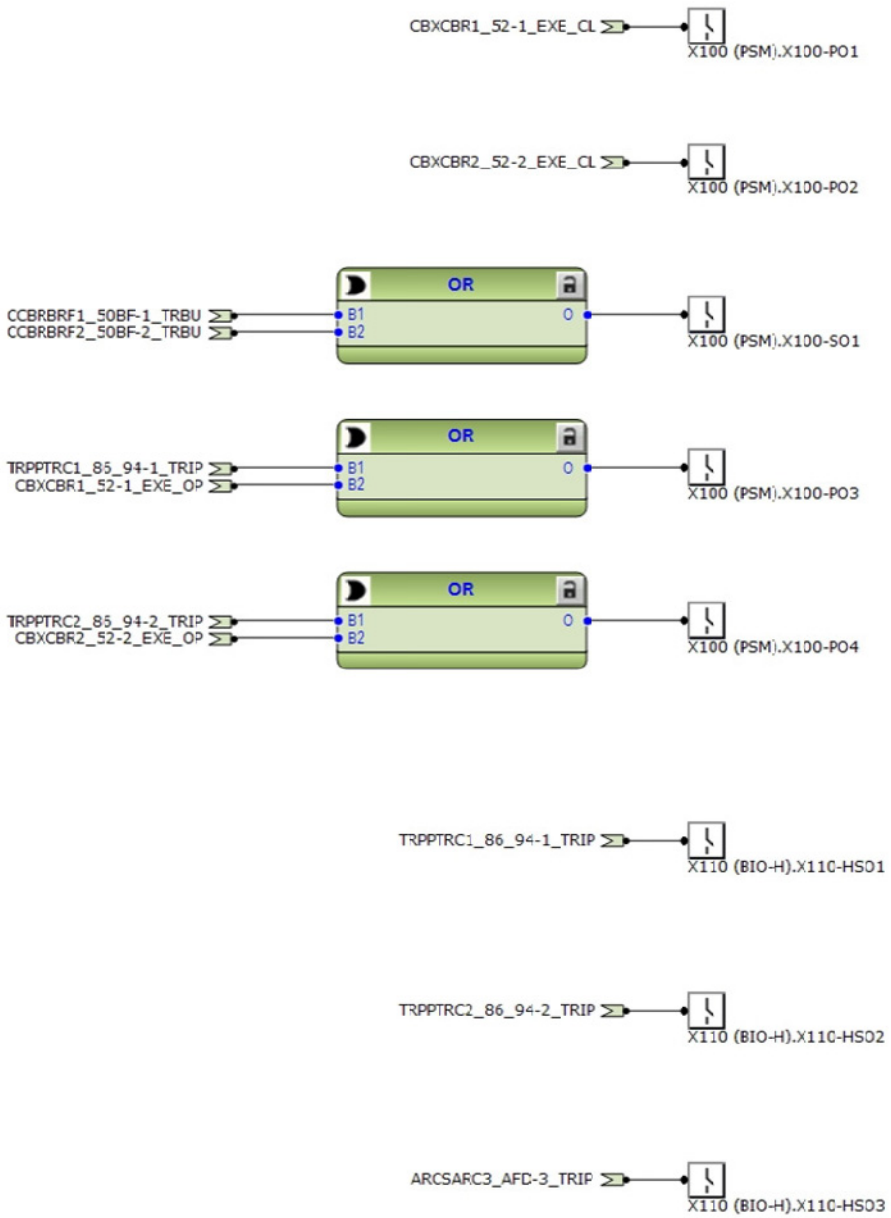

Figure 57: Binary outputs

High speed binary outputs (HSO) are available only if IED with High speed binary card has been ordered.

Figure 58: *Alarm LEDs 1 – 5*

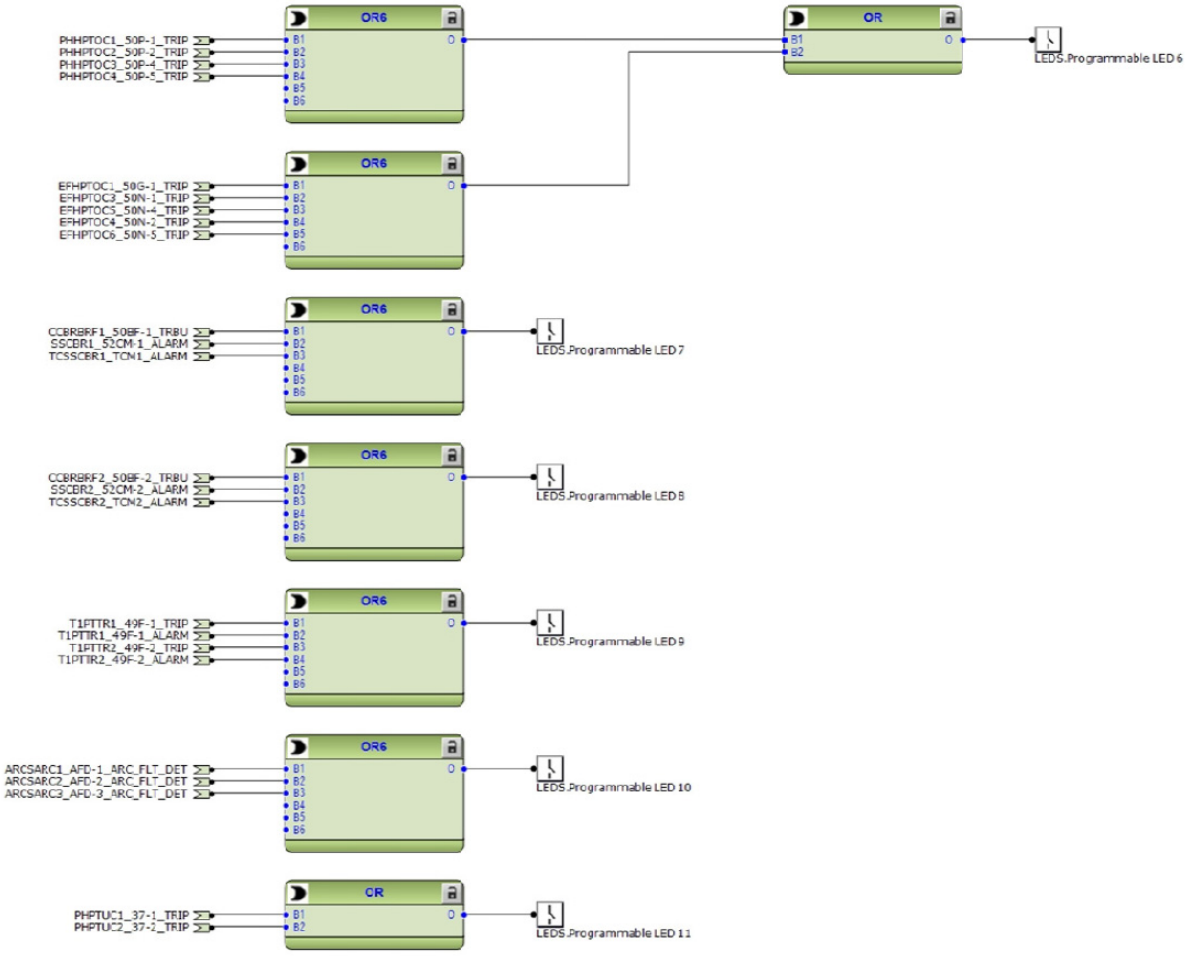

Figure 59: *Alarm LEDs 6 – 11*

3.5 Standard Configuration for Order Code Functional Applications C

3.5.1 Applications

This standard configuration is mainly intended for distribution feeders and a single breaker with power and energy metering provided standard. This configuration includes a 'voltage protection' ordering option with directional phase and ground overcurrent, voltage and frequency protection, and can also be applied for bus protection and automatic bus transfer schemes.

The IED with this standard configuration is delivered from the factory with default settings and parameters. The end-user flexibility for incoming, outgoing and internal signal

designation within the IED enable this configuration to be further adapted to different primary power system layouts and the related functionality needs by modifying the internal functionality using PCM600.

3.5.2 Functions

Table 20: Functions included in the REF615 standard configuration

Software Configuration				C			
Function	IEC 61850	ANSI C37.2-2008	IEC 60617	CA	CB	CC	CD
Protection							
Three-phase non-directional overcurrent protection, low stage, instance 1	PHLPTOC1	51P-1	3I> (1)	●	●	●	●
Three-phase non-directional overcurrent protection, high stage, instance 1	PHHPTOC1	50P-1	3I>> (1)	●	●	●	●
Three-phase non-directional overcurrent protection, high stage, instance 2	PHHPTOC2	50P-2	3I>> (2)	●	●	●	●
Three-phase non-directional overcurrent protection, instantaneous stage, instance 1	PHIPTOC1	50P-3	3I>>> (1)	●	●	●	●
Three-phase non-directional long time overcurrent protection, low stage, instance 1	PHLTPTOC1	51LT	3I> (3)	●	●	●	●
Three-phase directional overcurrent protection, low stage, instance 1	DPHLPDOC1	67/51P	3I> -> (1)	-	-	●	●
Three-phase directional overcurrent protection, high stage, instance 1	DPHHPDOC1	67/50P-1	3I>> -> (1)	-	-	●	●
Three-phase directional overcurrent protection, high stage, instance 2	DPHHPDOC2	67/50P-2	3I>> -> (2)	-	-	●	●
Non-directional ground-fault protection, low stage, instance 1	EFLPTOC1	51G	Io> (1)	●	-	●	-
Non-directional ground-fault protection, low stage, instance 2	EFLPTOC2	51N-1	Io> (2)	●	●	●	●
Non-directional ground-fault protection, low stage, instance 4	EFLPTOC4	50SEF	Io> (4)	-	●	-	●
Non-directional ground-fault protection, high stage, instance 1	EFHPTOC1	50G-1	Io>> (1)	●	-	●	-
Non-directional ground-fault protection, high stage, instance 2	EFHPTOC2	50G-2	Io>> (2)	●	-	●	-
Non-directional ground-fault protection, high stage, instance 3	EFHPTOC3	50N-1	Io>> (3)	●	●	●	●
Non-directional ground-fault protection, high stage, instance 4	EFHPTOC4	50N-2	Io>> (4)	●	●	●	●
Non-directional ground-fault protection, instantaneous stage, instance 1	EFIPTOC1	50G-3	Io>>> (1)	●	-	●	-
Non-directional ground-fault protection, instantaneous stage, instance 2	EFIPTOC2	50N-3	Io>>> (2)	●	●	●	●
Directional ground-fault protection, low stage, instance 1	DEFLPDEF1	67/51N	Io> -> (1)	-	-	● 1,2)	● 1,2)
Directional ground-fault protection, high stage, instance 1	DEFHPDEF1	67/50N-1	Io>> -> (1)	-	-	● 1,2)	● 1,2)
Directional ground-fault protection, high stage, instance 2	DEFHPDEF2	67/50N-2	Io>> -> (2)	-	-	● 1,2	● 1,2)

Software Configuration				C			
Function	IEC 61850	ANSI C37.2-2008	IEC 60617	CA	CB	CC	CD
Three phase directional power protection, instance 1	DPSRDIR1	32P-1	I1-> (1)	-	-	●	●
Ground directional power protection, instance 1	DNZSRDIR1	32N-1	I2 ->, Io-> (1)	-	-	● 1,2)	● 1,2)
Negative-sequence overcurrent protection, instance 1	NSPTOC1	46-1	I2> (1)	●	●	●	●
Negative-sequence overcurrent protection, instance 2	NSPTOC2	46-2	I2> (2)	●	●	●	●
Phase discontinuity protection	PDNSPTOC1	46PD	I2/I1>	●	●	●	●
Residual overvoltage protection, instance 2	ROVPTOV2	59N-1	Uo> (2)	-	-	●	●
Three-phase undervoltage protection, instance 1	PHPTUV1	27-1	3U< (1)	-	-	●	●
Three-phase undervoltage protection, instance 2	PHPTUV2	27-2	3U< (2)	-	-	●	●
Three-phase overvoltage protection, instance 1	PHPTOV1	59-1	3U> (1)	-	-	●	●
Three-phase overvoltage protection, instance 2	PHPTOV2	59-2	3U> (2)	-	-	●	●
Negative-sequence overvoltage protection, instance 1	NSPTOV1	47-1	U2> (1)	-	-	●	●
Negative-sequence overvoltage protection, instance 2	NSPTOV2	47-2	U2> (2)	-	-	●	●
Frequency protection, instance 1	FRPFRQ1	81-1	f>/f<,df/dt (1)	-	-	●	●
Frequency protection, instance 2	FRPFRQ2	81-2	f>/f<,df/dt (2)	-	-	●	●
Voltage per hertz protection, instance 1	OEPVPH1	24	U/f> (1)	-	-	●	-
Three-phase thermal protection for feeders, cables and distribution transformers, Instance 1	T1PTTR1	49F-1	3Ith>F (1)	●	●	●	●
Numerical stabilized low impedance restricted ground-fault protection	LREFPNDF1	87LOZREF	dIoLo>	●	-	●	-
Circuit breaker failure protection, instance 1	CCBRBRF1	50BF-1	3I>/Io>BF (1)	●	●	●	●
Three-phase inrush detector, instance 1	INRPHAR1	INR-1	3I2f> (1)	●	●	●	●
Master trip, instance 1	TRPPTRC1	86/94-1	Master Trip (1)	●	●	●	●
Master trip, instance 2	TRPPTRC2	86/94-2	Master Trip (2)	●	●	●	●
Arc protection, instance 1	ARCSARC1	AFD-1	ARC (1)	●	●	●	●
Arc protection, instance 2	ARCSARC2	AFD-2	ARC (2)	●	●	●	●
Arc protection, instance 3	ARCSARC3	AFD-3	ARC (3)	●	●	●	●
High impedance fault detection	PHIZ1	HIZ	PHIZ1	-	●	-	●
Load shedding and restoration, instance 1	LSHDPFRQ1	81LSH-1	UFLS/R (1)	-		●	●
Load shedding and restoration, instance 2	LSHDPFRQ2	81LSH-2	UFLS/R (2)	-	-	●	●
Loss of phase, instance 1	PHPTUC1	37-1	3I< (1)	●	●	●	●
Control							
Circuit-breaker control, instance 1	CBXCBR1	52-1	I <-> O CB (1)	●	●	●	●
Auto-reclosing	DARREC1	79	O -> I	●	●	●	●
Condition Monitoring							

Software Configuration				C			
Function	IEC 61850	ANSI C37.2-2008	IEC 60617	CA	CB	CC	CD
Circuit-breaker condition monitoring, instance 1	SSCBR1	52CM-1	CBCM (1)	●	●	●	●
Trip circuit supervision, instance 1	TCSSCBR1	TCM-1	TCS (1)	●	●	●	●
Trip circuit supervision, instance 2	TCSSCBR2	TCM-2	TCS (2)	●	●	●	●
Current circuit supervision	CCRDIF1	CCM	MCS 3I	●	●	●	●
Fuse failure supervision, instance 1	SEQRFUF1	60-1	FUSEF (1)	-	-	●	●
Cable fault detection	RCFD1	CFD	RCFD1	●	●	●	●
Measurement							
Three-phase current measurement, instance 1	CMMXU1	IA, IB, IC	3I	●	●	●	●
Sequence current measurement, instance 1	CSMSQI1	I1, I2, I0	I1, I2, I0	●	●	●	●
Residual current measurement, instance 1	RESCMMXU1	IG	Io	●	●	●	●
Three-phase voltage measurement, instance 1	VMMXU1	VA, VB, VC	3U	●	●	●	●
Sequence voltage measurement, instance 1	VSMSQI1	V1, V2, V0	U1, U2, U0	●	●	●	●
Single-phase power and energy measurement, instance 1	SPEMMXU1	SP, SE-1	SP, SE	●	●	●	●
Three-phase power and energy measurement, instance 1	PEMMXU1	P, E-1	P, E	●	●	●	●
Current total demand distortion, instance 1	CMHAI1	PQI-1	PQM3I	●	●	●	●
Voltage total harmonic distortion, instance 1	VMHAI1	PQVPH-1	PQM3U	●	●	●	●
Voltage variation, instance 1	PHQVVR1	PQSS-1	PQ 3U<>	●	●	●	●
Load profile	LDPMSTA1	LoadProf	-	●	●	●	●
Frequency measurement, instance 1	FMMXU1	f	f	●	●	●	●
Other functions							
Minimum pulse timer (2 pcs), instance 1	TPGAPC1	TP 1	TP (1)	●	●	●	●
Minimum pulse timer (2 pcs), instance 2	TPGAPC2	TP 2	TP (2)	●	●	●	●
Minimum pulse timer (2 pcs), instance 3	TPGAPC3	TP 3	TP (3)	●	●	●	●
Minimum pulse timer (2 pcs), instance 4	TPGAPC4	TP 4	TP (4)	●	●	●	●
Minimum pulse timer (2 pcs, second resolution), instance 1	TPSGAPC1	62CLD-1	TPS (1)	●	●	●	●
Minimum pulse timer (2 pcs, minute resolution), instance 1	TPMGAPC1	62CLD-2	TPM (1)	●	●	●	●
Pulse timer (8 pcs), instance 1	PTGAPC1	PT-1	PT (1)	●	●	●	●
Pulse timer (8 pcs), instance 2	PTGAPC2	PT-2	PT (2)	●	●	●	●
Time delay off (8 pcs), instance 1	TOFGAPC1	TOF-1	TOF (1)	●	●	●	●
Time delay off (8 pcs), instance 2	TOFGAPC2	TOF-2	TOF (2)	●	●	●	●
Time delay on (8 pcs), instance 1	TONGAPC1	TON -1	TON (1)	●	●	●	●

Software Configuration				C			
Function	IEC 61850	ANSI C37.2-2008	IEC 60617	CA	CB	CC	CD
Time delay on (8 pcs), instance 2	TONGAPC2	TON -2	TON (2)	●	●	●	●
Set reset (8 pcs), instance 1	SRGAPC1	SR-1	SR (1)	●	●	●	●
Set reset (8 pcs), instance 2	SRGAPC2	SR-2	SR (2)	●	●	●	●
Move (8 pcs), instance 1	MVGAPC1	MV-1	MV (1)	●	●	●	●
Move (8 pcs), instance 2	MVGAPC2	MV-2	MV (2)	●	●	●	●
Logging functions							
Disturbance recorder	RDRE1	DFR	-	●	●	●	●
Fault recorder	FLMSTA1	FR	-	●	●	●	●
Sequence event recorder	SER	SER	-	●	●	●	●
Fault location	DRFLO1	FLO	FLO	●	●	●	●

1) Io selectable by parameter, **I2** as default

2) Vo calculated and negative sequence voltage selectable by parameter, V2 as default

3.5.3 Default I/O connections

Table 21: Default connections for binary inputs

Binary input	Default usage	Connector pins
X110-BI1		X110-1,2
X110-BI2		X110-3,4
X110-BI3		X110-5,6
X110-BI4		X110-7,6
X110-BI5	Ground blocking	X110-8,9
X110-BI6	Circuit Breaker 1 close status	X110-10,9
X110-BI7	Circuit Breaker 1 open status	X110-11,12
X110-BI8	AR blocking	X110-13,12

Table 22: Default connections for binary outputs

Binary output	Default usage	Connector pins
X100-PO1	Close circuit breaker	X100 – 6,7
X100-PO2	Breaker failure backup trip to upstream breaker	X100 – 8,9
X100-SO1		
X100-SO2		
X100-PO3	Open circuit breaker / Master Trip (1)	X100 – 15,16,17,18,19
X100-PO4	Open circuit breaker / Master Trip (2)	X100 – 20,21,22,23,24
X110-SO1		X110-14,15,16
X110-SO2		X110-17,18,19
X110-SO3		X110-20,21,22
X110-SO4		X110-23,24
X110-HSO1	Master Trip (1) / Trip from ARC-1 protection	X110 – 15,16
X110-HSO2	Trip from ARC-2 protection	X110 – 19,20
X110-HSO3	Trip from ARC-3 protection	X110 – 23,24

Table 23: Default connections for LEDs

LED	LED label
LED 1	Phase A
LED 2	Phase B
LED 3	Phase C
LED 4	Neutral / Ground, Neutral / SEF
LED 5	Time
LED 6	Instantaneous
LED 7	Recloser lockout
LED 8	Voltage / Frequency
LED 9	Overload Alarm/Trip
LED 10	Arc Flash Detection
LED 11	HIZ Detection

3.5.4 Typical connection diagrams

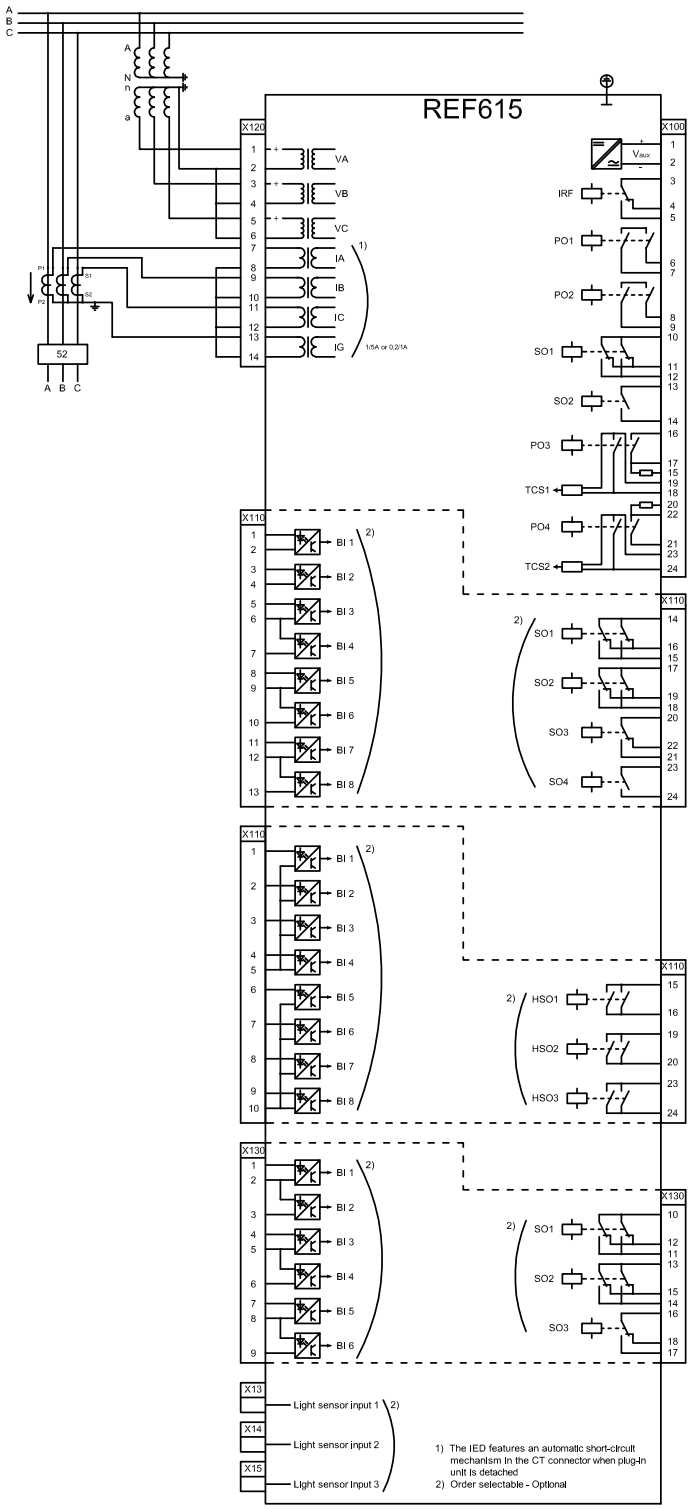

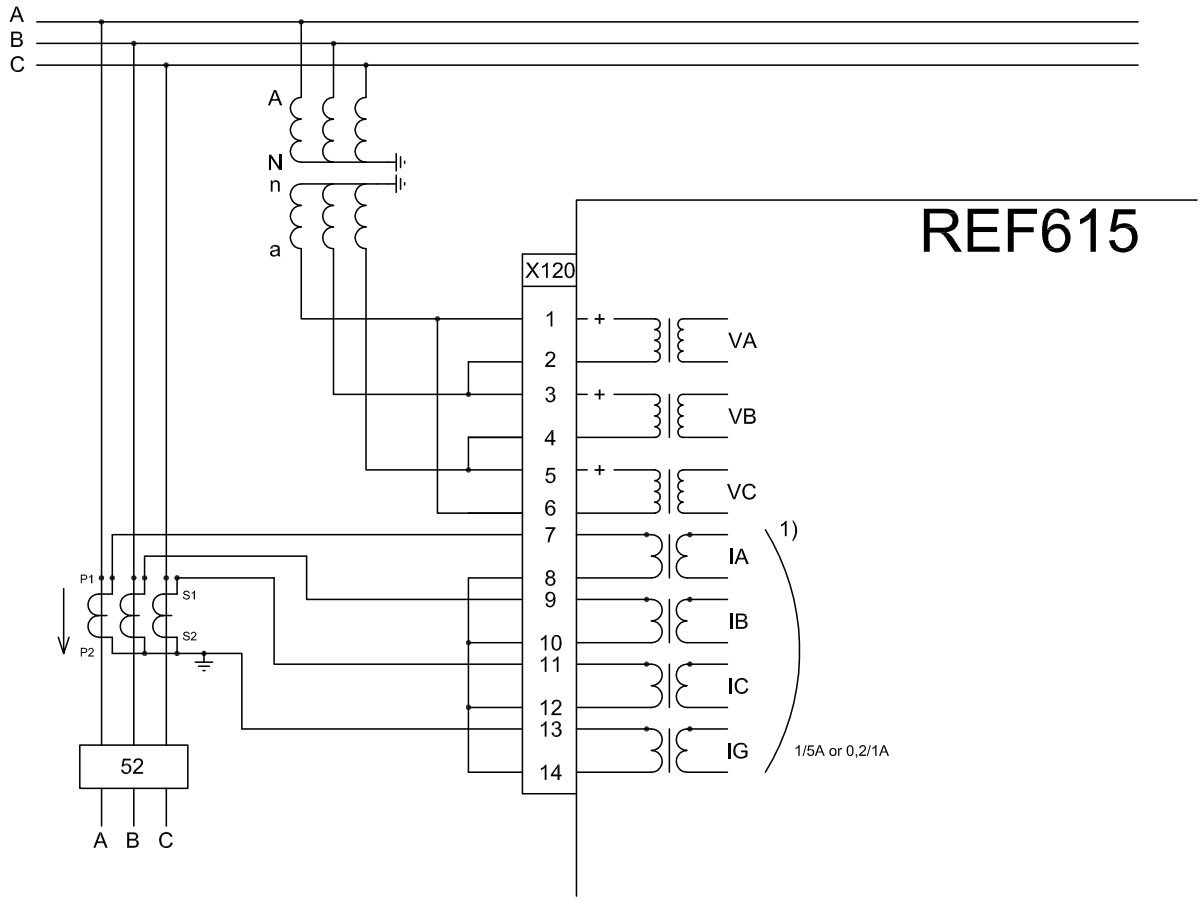
A
B
C
A
N
n
a
REF615
X120
1
2
3
4
5
6
7
8
9
10
11
12
13
14
+
+
+
VA
VB
VC
IA
IB
IC
IG
1)
1/5A or 0,2/1A
P1
P2
S1
S2
52
A B C

3.5.5 Functional diagrams

The functional diagrams describe the default input, output, alarm LED and function-to-function connections. The default connections can be viewed with and changed with PCM 600 according to the application requirements, if necessary.

The analog channels, measurements from CTs, have fixed connections to the different function blocks inside the IED's standard configuration.

The signal marked with IA, IB and IC represents the three phase currents. The signal IG represents the measured ground current.

The signal marked with VA, VB and VC represents the three phase currents. The signal VG represents the measured ground current.

REF615 offers six different settings group which the user can set based on individual needs. Each group can then, be activated/ deactivated by using the setting group settings available in REF615.

3.5.6 Functional diagrams for protection

Collects the functional diagrams describe the IED's protection functionality in detail and according to the factory set default connections.

Eight overcurrent stages totally are offered for overcurrent and short-circuit protection. Three of them include directional functionality. The non directional high stage (50P-1) and directional high stage (67/50P-1) will be blocked by cold load detection logic. The cold load detection logic starts from closing of the circuit breaker and is active during set time. The cold load detection logic´s active time can be set in a resolution of minutes or seconds to the functions TPSGAPC and TPMGAPC.

The directional overcurrent and short circuit protection will be blocked by default also if the fuse failure situation is detected.

The inrush detection block's (INR-1) output BLK2H offers the possibility to either block the function or multiply the active settings for any of the shown protection function blocks.

All trip signals are connected to the Master Trip and also to the alarm LEDs. Alarm LEDs 1, 2 and 3 are used for phase segregated information of current based faults. The alarm LED5 is used to indicate time delayed trips and the alarm LED6 instantaneous trips of the current based protection functions.

The pickup information of all overcurrent functions is collected to the variable OC_PICKUP_ALARM and connected to the disturbance recorder. This signal can be mapped to the signal outputs depending on the application needs.

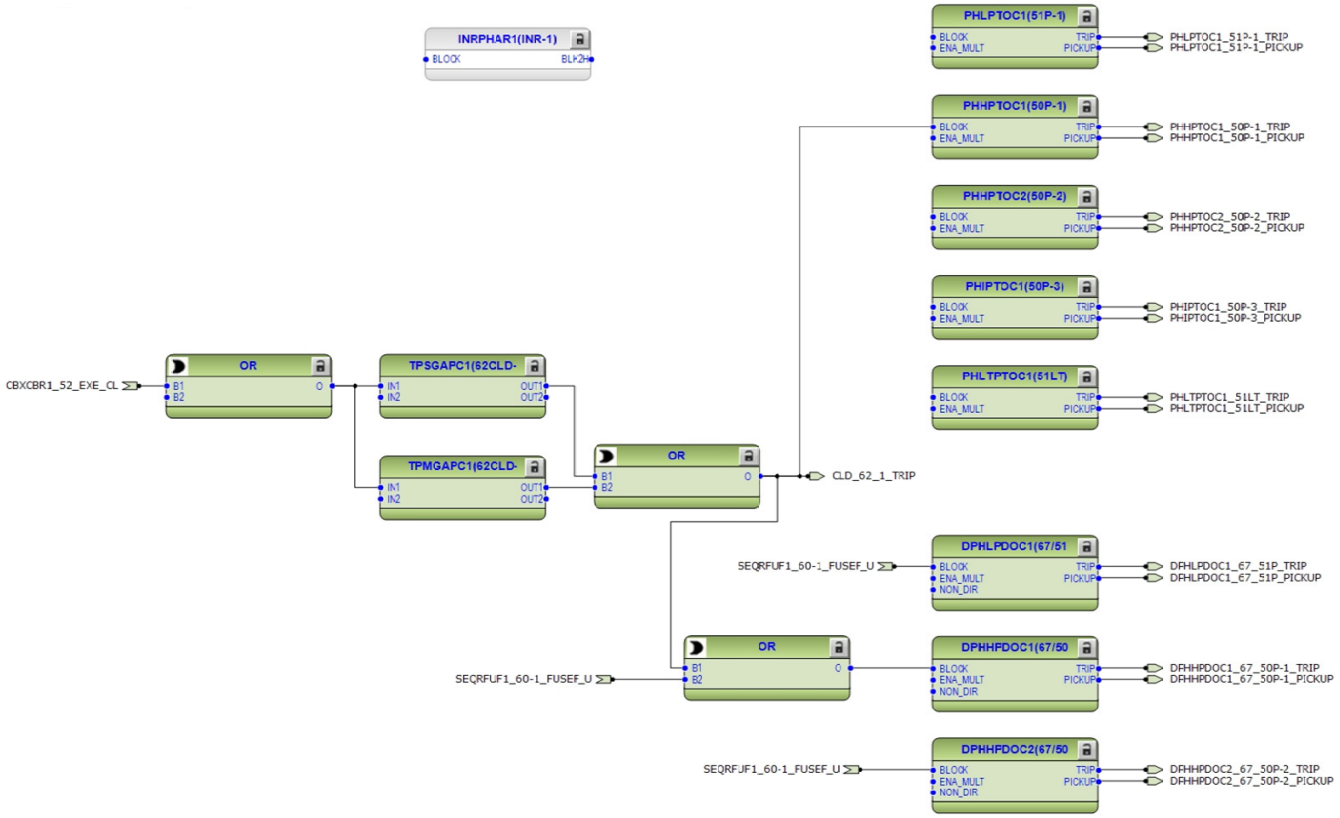

Figure 60: Three phase overcurrent protection

Four stages are provided to non-directional neutral overcurrent protection. Additionally depending on order option, one stage is offered as a sensitive ground fault protection. The neutral overcurrent protection uses calculated residual current component.

The operation of 51N, 51N-1, 51N-2 and 50SEF will be blocked if GROUND_BLOCKING input is active. The 50N-1 will also be blocked if the cold load detection logic is activated. The operation of neutral overcurrent protection functions is connected to alarm LED 4.

The alarm LED5 is used to indicate time delayed trips and the alarm LED6 instantaneous trips of the current based protection functions.

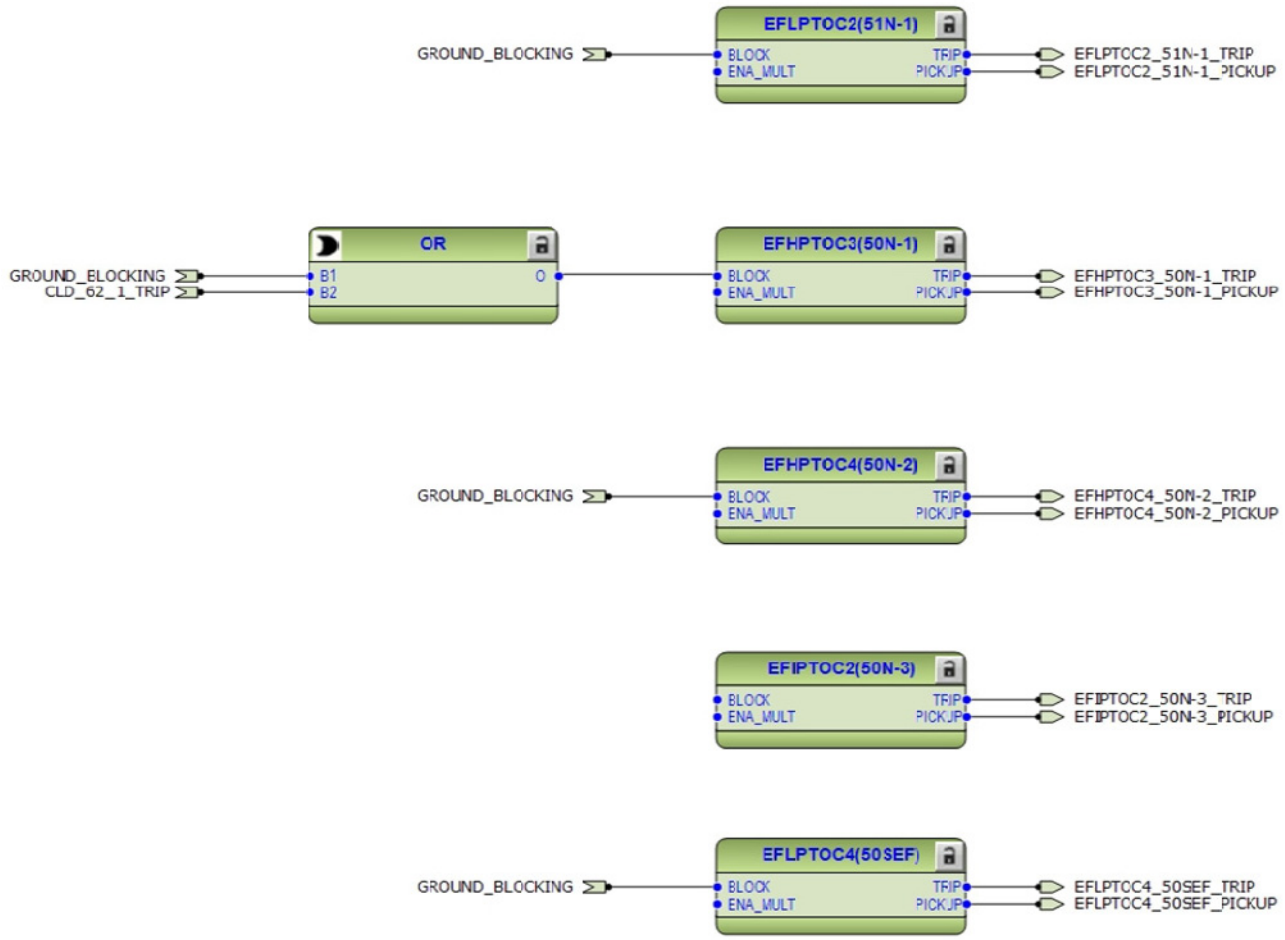

Figure 61: Non-directional neutral overcurrent protection

SEF and HIZ functions are included if sensitive SEF/HIZ measuring option is used.

Four stages are provided to non-directional ground fault protection. Additionally depending on order option, one stage is offered as a sensitive ground fault protection. The ground fault protection uses measured residual current component.

The operation of 51G, 51G-1 and 51G-2 will be blocked if GROUND_BLOCKING input is active. The 50G-1 will also be blocked if the cold load detection logic is activated. The operation of neutral overcurrent protection functions is connected to alarm LED 4.

The alarm LED5 is used to indicate time delayed trips and the alarm LED6 instantaneous trips of the current based protection functions.

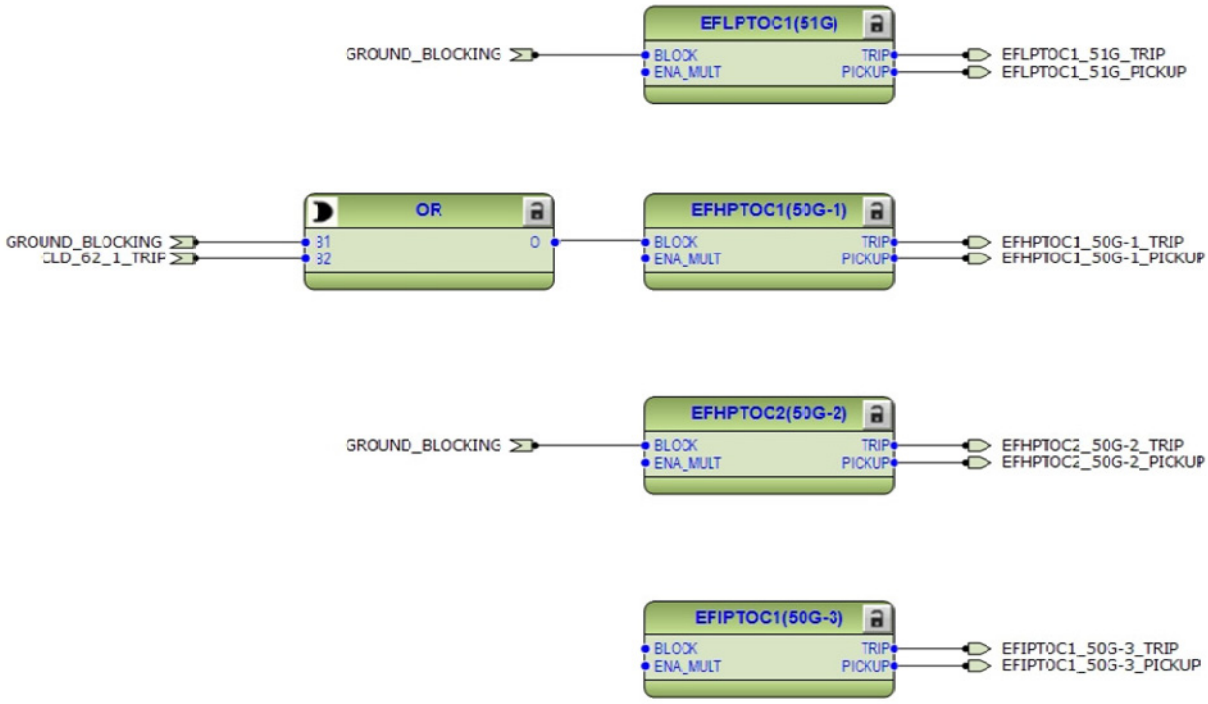

Figure 62: Non-directional neutral overcurrent protection

51G, 50G-1, 50G-2 and 50G-3 are included if ground measuring option is used.

Three stages are offered for directional ground-fault protection. By default the stages (67/51N) and (67/50N-1) will be blocked by activating the GROUND_BLOCKING input. If the cold load situation is detected the (67/50N-1) function will be blocked. Also if the fuse failure situation is detected all directional ground-fault protection functions will be blocked.

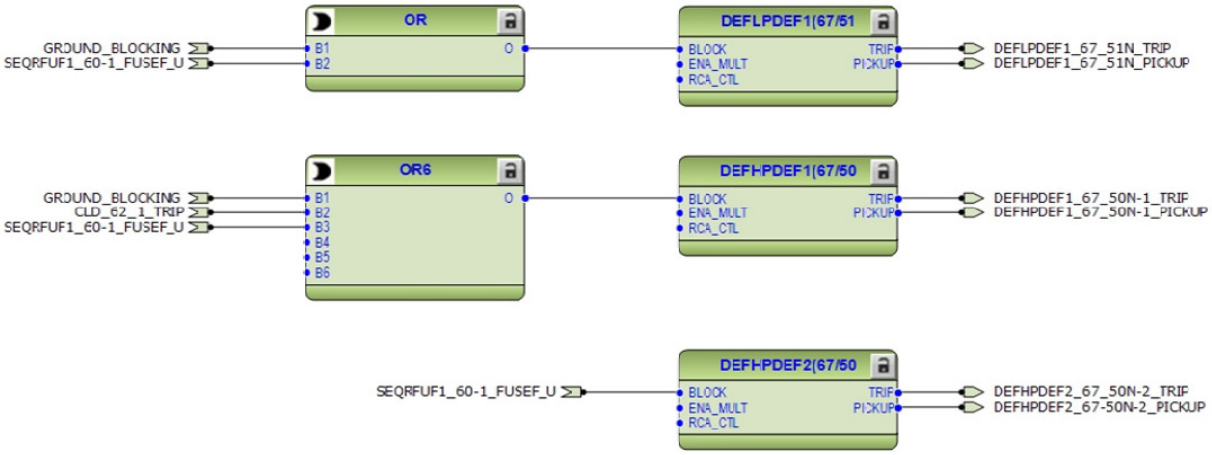

Figure 63: Directional neutral overcurrent protection

67/51P, 67/51P -1 and 67/51P-2 are included if CC and CD analog option is used.

Two negative-sequence overcurrent protection (46-1 and 46-2) stages are provided for phase unbalance protection. These functions are used to protect the feeder against phase unbalance.

The phase discontinuity protection (46PD) provides protection for interruptions in the normal three-phase load supply, like in downed conductor situations.

The operation of 46-1, 46-2 and 46PD is not blocked as default by any functionality. The operation of these protection functions is connected to alarm LED 5. The pickup signals are connected to OC_PICKUP_ALARM variable in logic.

The undercurrent protection function (37-1) is offered for protection against loss of phase situations. The trip signal is connected to the disturbance recorder only by default.

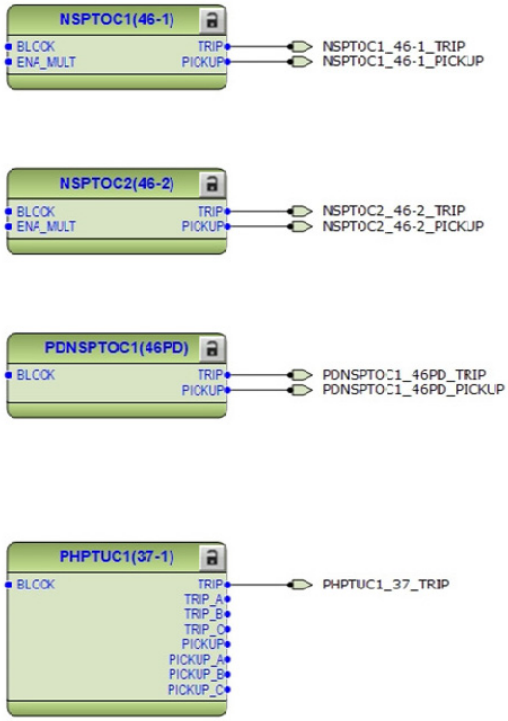

Figure 64: Negative sequence, phase discontinuity and undercurrent protection

All overcurrent pickup signals are merged together as variable OC_PICKUP_ALARM. This alarm is by default connected to disturbance recorder channel. It can be mapped also e.g. for alarming or blocking purposes to the binary output relays.

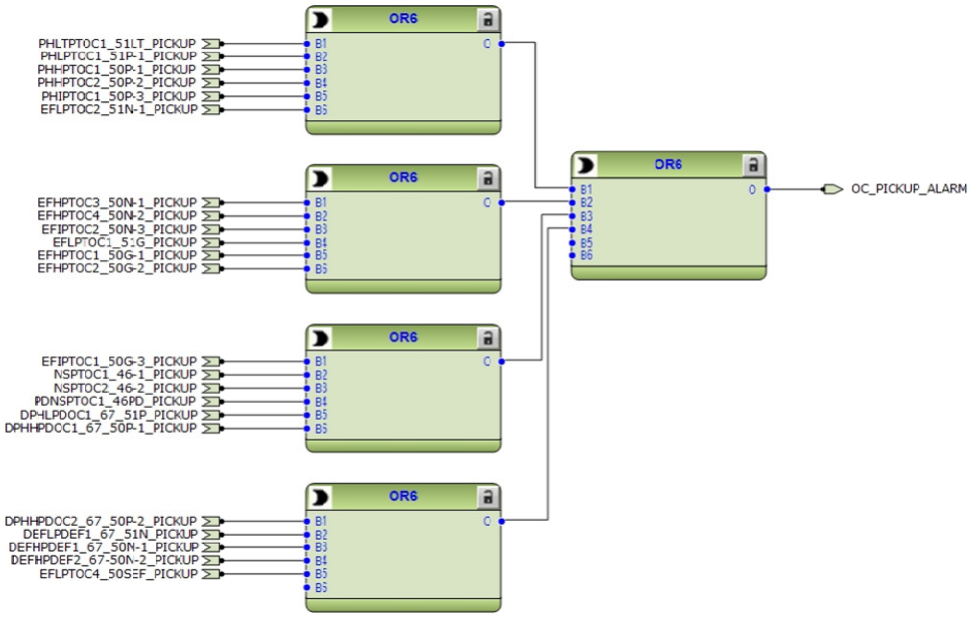

Figure 65: Overcurrent pickup alarm

The directional positive sequence over power protection (32P-1) and directional negative sequence over power protection (32N-1) are offered in configuration. The output information of these functions can be used e.g. releasing or blocking purposes but by the default those are not connected. Directional power protection functions are blocked by default configuration connection if fuse failure is detected.

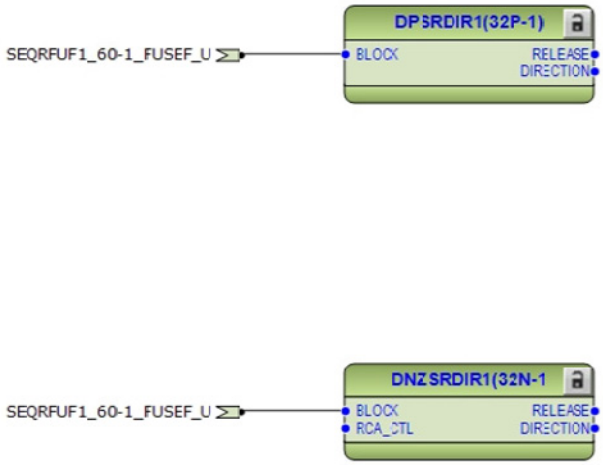

Figure 66: Directional power protection

Two overvoltage and undervoltage protection stages (27-1, 27-2 and 59-1, 59-2) offer protection against abnormal phase voltage conditions. The operation of voltage functions is connected to alarm LED8. A failure in the voltage measuring circuit is detected by the fuse failure function and the activation is connected to undervoltage protection functions to avoid faulty undervoltage tripping.

Negative-sequence overvoltage (47-1 and 47-2) protection functions enable voltage-based unbalance protection. The operation signals of voltage-sequence functions are connected to alarm LED8, which is a combined voltage protection alarm LED.

The residual overvoltage protection (59N-1) provides ground-fault protection by detecting abnormal level of residual voltage. It can be used, for example, as a nonselective backup protection for the selective directional ground-fault functionality. The operation signal is connected to alarm LED8.

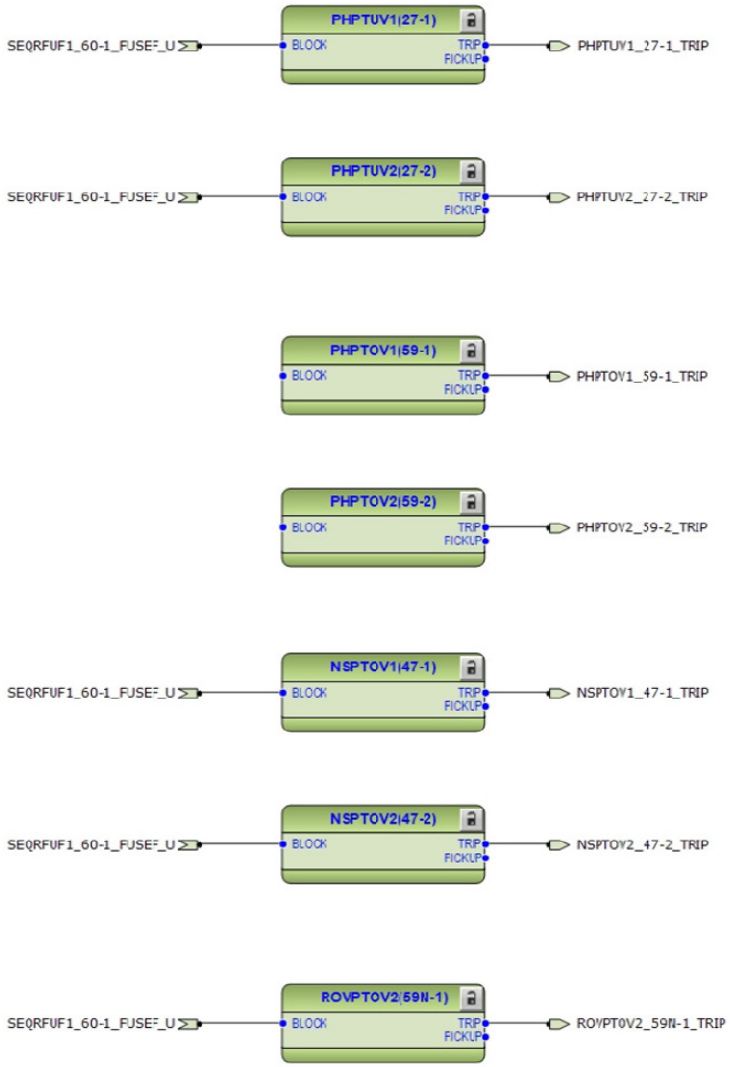

Figure 67: Voltage protection functions

The over excitation protection function (24) is offered according to the order code. By the default the TRIP output is connected only to alarm LED8.

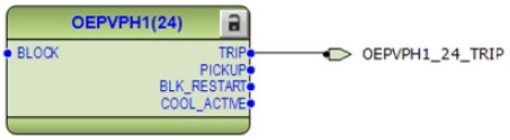

Figure 68: Over excitation protection

The thermal overload protection function (49F-1) detects short and long term overloads under varying load conditions.

The trip of the thermal overload protection function is connected to the Master Trip1. The alarm and trip signals are connected to alarm LED 9.

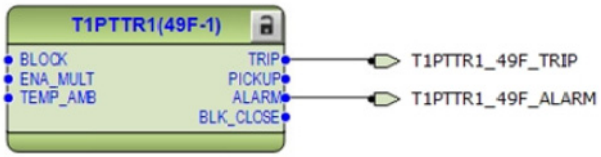

Figure 69: Thermal overload protection

According to the order code the configuration includes restricted low-impedance ground-fault protection function (87LOZREF). The function is available with functional application AB.

The numerical differential current stage operates exclusively on ground faults occurring in the protected area, that is, in the area between the phase and ground current transformers. An ground fault in this area appears as a differential current between the residual current of the phase currents and the neutral current of the conductor between the star-point of the transformer and ground.

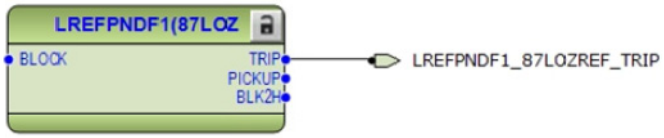

Figure 70: Low impedance restricted ground fault protection

The circuit-breaker failure protection (50BF) is initiated via the PICKUP input by a functions connected to the Master Trip 1 and by opening command of the circuit breaker. 50BF offers different operating modes associated with the circuit-breaker position and the measured phase and residual currents.

50BF has two operating outputs: TRRET and TRBU. The TRBU output can be used to give a backup trip to the circuit breaker feeding upstream. In the configuration the TRBU output signal is connected to the output PO2 (X100: 8-9).

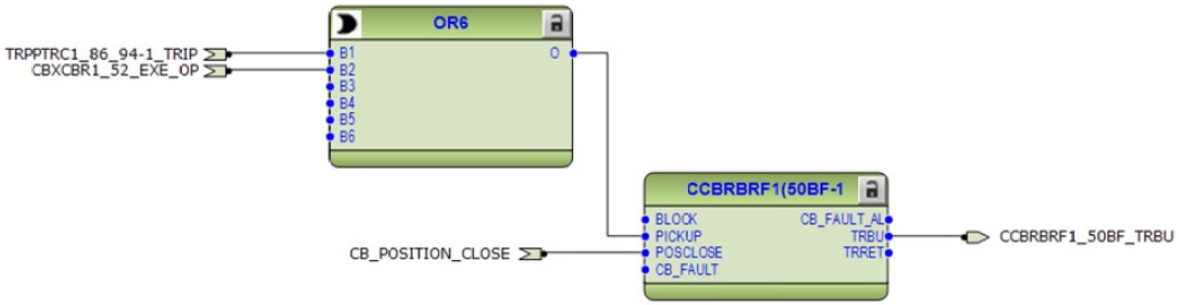

Figure 71: Circuit breaker failure protection

The TRRET operate output can be used for retripping its own circuit breaker through the Master Trip again. However this is not connected in present configuration.

Three arc protection (AFD-1, AFD-2 and AFD-3) stages are included as an optional function. The arc protection offers individual function blocks for three ARC sensors that can be connected to the IED. Each arc protection function block has two different operation modes, with or without the phase and residual current check.

Trip signal from AFD-1 is connected to Master trip 1, available at PO3 (X100: 15-19). Whereas the trip signal from AFD-2 and AFD-3 is connected to master trip 2, available at PO4 (X100: 20-24). The operation of these protection functions is connected to alarm LED 11.

If the IED has been ordered with high speed binary outputs, then trip signal from AFD-2 and AFD-3 are connected directly to high speed output HSO2 (X110:19-20) and HS03(X110:23-24) respectively.

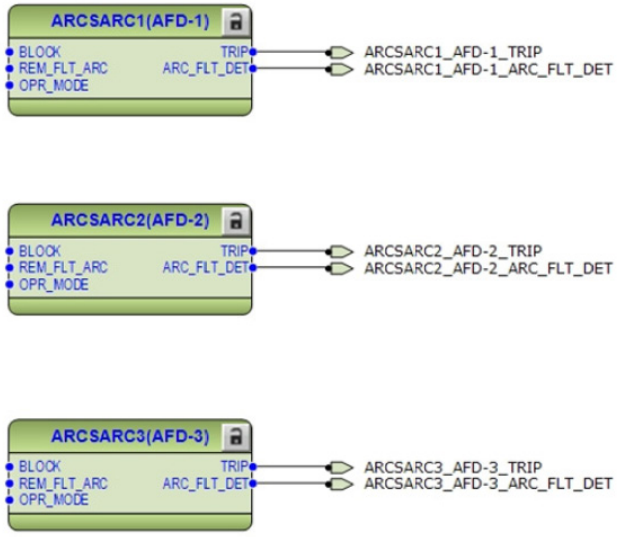

Figure 72: Arc protection

According to the order code the configuration includes high impedance fault protection function (HIZ). The function is available with functional application AC. The trip of the high impedance protection function is connected to the disturbance recorder and to the alarm LED 11.

Figure 73: High impedance fault protection

The selectable under frequency or over frequency protection (81-1 and 81-2) prevents damage to network components under unwanted frequency conditions.

Both functions contain a selectable rate of change of the frequency (gradient) protection to detect an increase or decrease in the fast power system frequency at an early stage. This can be used as an early indication of a disturbance in the system. The operation signals are connected to alarm LED8.

Two load shedding and restoration stages are offered in the standard configuration.

The load shedding and restoration function (81LSH-1 and 81LSH-2) is capable of shedding load based on under frequency and the rate of change of the frequency. The load that is shed during the frequency disturbance can be restored once the frequency is stabilized to the normal level. Also manual restore commands can be given via binary inputs but by the default it is not connected. The operation signal is connected to the alarm LED 8.

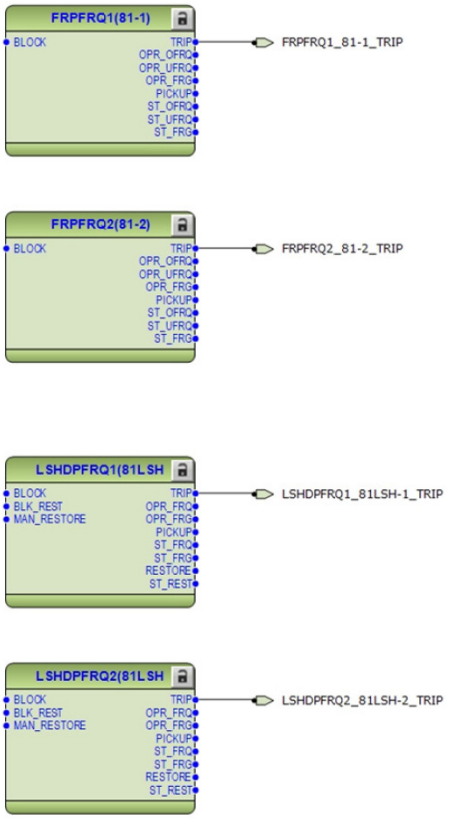

Figure 74: Frequency and Load shedding functions

Two master trip logics (86/94-1 and 86/94-2) are provided as a trip command collector. 86/94-1 collects the trip signals from 46, 46PD, 49F, 50P, 50N, 50G, 51LT, 51P, 51N, 51G, 67P, 67N, 81LSH-1, 87LOZREF, AFD-1 and SEF protection functions and is connected to trip output contact PO3 (X100:16-19) and also to high speed output HS01 (X110:15-16) for IEDs ordered with high speed binary output cards.

Open control commands to the circuit breaker from the local or remote is also connected directly to the output PO3 (X100:16-19) from circuit breaker control (52) function block.

86/94-2 collects the trip signals from AFD-2 and AFD-3 protection functions and is connected to trip output contact PO4 (X100:20-24).

86/94-1 and 86/94-2 provides the lockout/latching function, event generation and the trip signal duration setting. If the lockout operation mode is selected, one binary input can be reassigned to the RST_LKOUT input of the Master Trip to enable external reset with a push button.

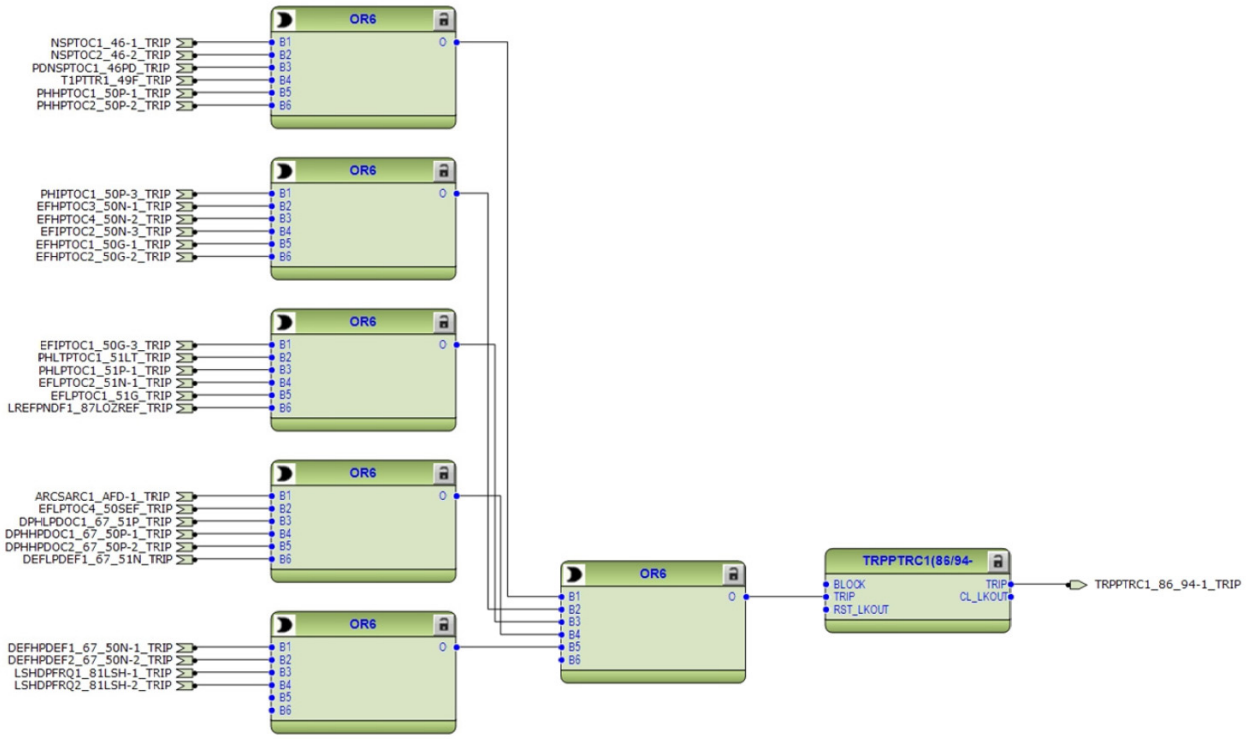

Figure 75: *Master trip logic 1*

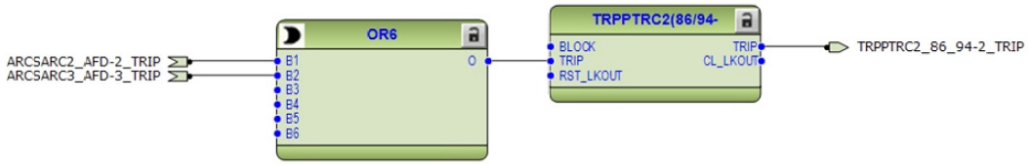

Figure 76: *Master trip logic 2*

3.5.7 Functional diagrams for control functions

The circuit breaker closing is enabled when the ENA_CLOSE input is activated. The input can be activated by the configuration logic, which is e.g. a combination of the disconnector or breaker truck and ground switch position status and the status of the Master Trip logics and gas pressure alarm and circuit-breaker spring charging. With the present configuration, the activation of ENA_CLOSE input is configured using only Master Trip logic 86/94-1 and 86/94-2 i.e. the circuit breaker cannot be closed in case master trip is active.

The ITL_BYPASS input can be used, for example, to always enable the closing of the circuit breaker when the circuit breaker truck is in the test position, despite of the interlocking conditions being active when the circuit breaker truck is closed in service position.

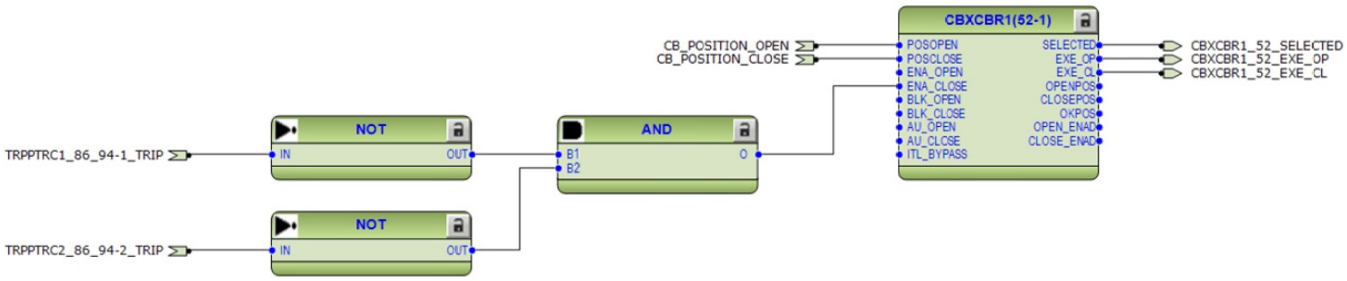

Figure 77: Circuit breaker control

If the ENA_CLOSE and BLK_CLOSE signals are completely removed from the breaker control function block 52 with PCM600, the function assumes that the breaker close commands are allowed continuously.

The autorecloser functionality (79) is configured to be initiated by operate signals from a number of protection stages through the INIT1...5 inputs. It is possible to create individual autoreclose sequences for each input.

The autoreclose function can be blocked with the INHIBIT_RECL input. By default, the operation of selected protection functions is connected to this input. A control command to the circuit breaker, either local or remote, also blocks the autoreclose function via the CBXCBR-selected signal. The circuit breaker availability for the autoreclosure sequence is expressed with the CB_READY input in DARREC1. In the configuration, this signal is not connected to any of the binary inputs. As a result, the function assumes that the breaker is available all the time.

The autoreclose locked status is connected to the alarm LED 7. The unsuccessful autoreclosing UNSUC_RECL is connected to the disturbance recorder.

The autoreclosing function is optional functionality and is included into configuration according to the ordercode.

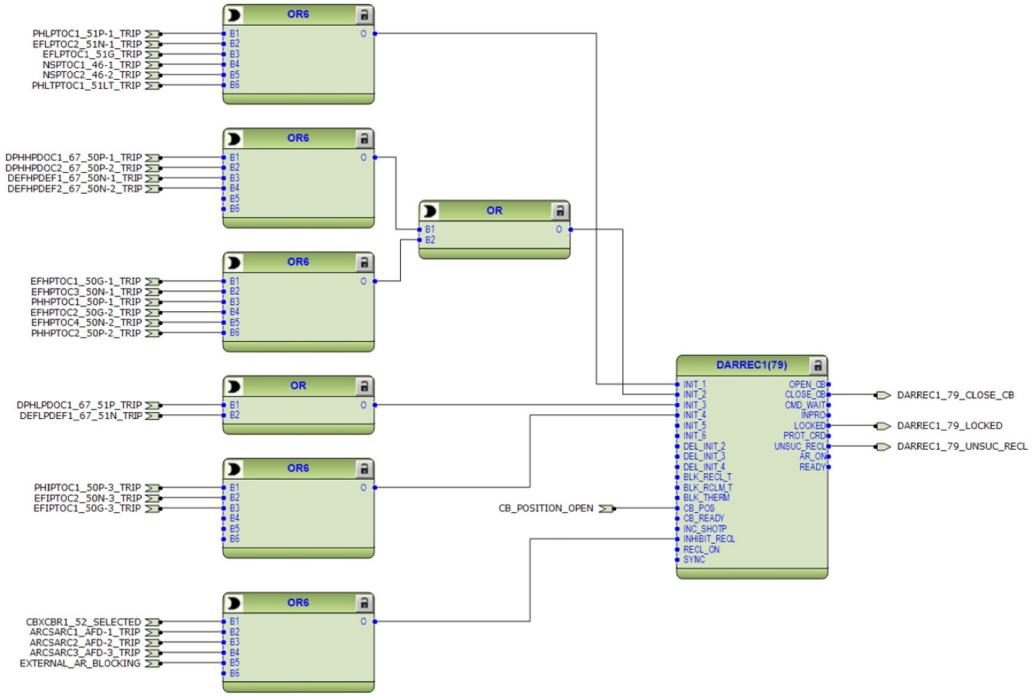

Figure 78: *Autoreclosing*

3.5.8 Functional diagrams for condition monitoring

Two trip circuit monitoring (TCM-1 and TCM-2) stages are provided to supervise the trip circuit of the circuit breaker connected at PO3 (X100:15-19) and PO4 (X100:20-24).

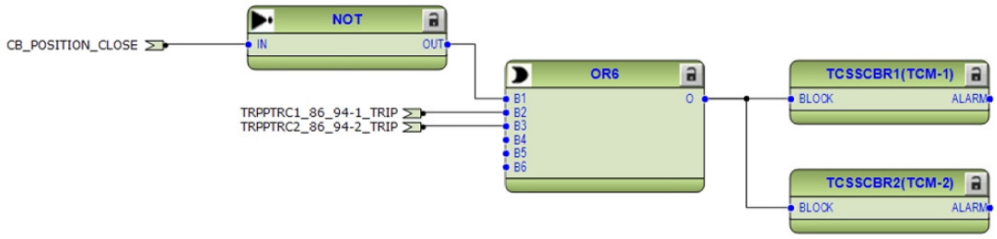

Figure 79: *Trip circuit monitoring*

The TCM-1 and TCM-2 functions are blocked by 86/94-1, 86/94-2 and when the circuit-breaker is not in closed position.

By default it is expected that there is no external resistor in the circuit breaker tripping/closing coil circuit connected parallel with circuit breaker normally open/closed auxiliary contact.

A failure in current measuring circuits is detected by current circuit supervision function (CCM). When a failure is detected, function activates and can be used to block protection functions which operates using calculated sequence component currents for example 46, thus avoiding mal-operation.

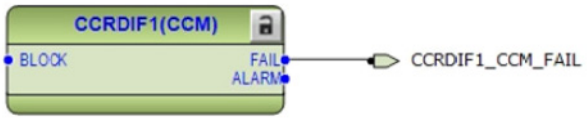

Figure 80: Current circuit supervision

By default the FAIL output from CCM function is only connected to disturbance recorder

The fuse failure supervision SEQRFUF1 detects failures in voltage measurement circuits. Failures, such as an open miniature circuit breaker, are detected and the alarm is connected to the few voltage based protection functions to avoid misoperation

Figure 81: Fuse failure monitoring

The circuit breaker condition monitoring function (52CM) supervises the circuit breaker status based on the binary input information connected and measured current levels. The function introduces various supervision alarms.

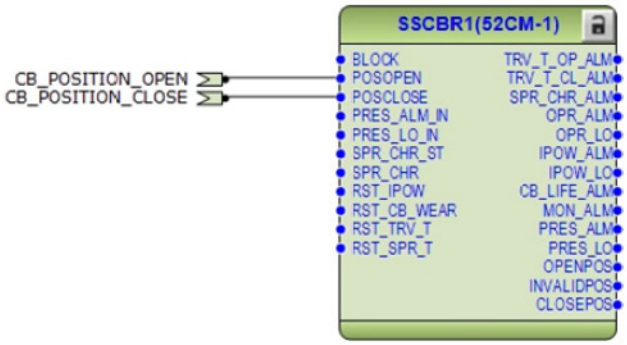

Figure 82: Circuit breaker condition monitoring

Cable fault detector (CFD) is offered for detecting self clearing in the feeder. The cable fault detector function is optional functionality and is included into configuration according to the ordercode.

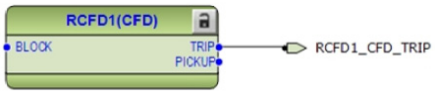

Figure 83: Cable fault detector

By default the TRIP output from CFD function is only connected to disturbance recorder

3.5.9 Functional diagrams for Measurements

The phase current inputs to the IED are measured by three-phase current measurement (IA, IB, IC) function block. The current input is connected to the X120 card in the back panel. Similarly the sequence and residual current are measured by sequence current measurement (I1, I2, I0) and residual current measurement (IG) function blocks respectively.

The phase voltage input is connected to the X130 card in the back panel. The voltages are measured by (VA,VB,VC) function block. Similarly the sequence voltages are measured by sequence voltage measurement (V1, V2, V0) function block respectively.

The measurements can be seen from the LHMI and is available using the measurement option in the menu selection. Based on the settings, function blocks can generate low alarm/warning, high alarm/warning signals for the measured current values.

The frequency measurement of the power system (f) is available. Also single (SPEMMXU1) and three phase (PEMXXU1) power measurements are available.

The power quality function (PQI-1) is used to measure the harmonic contents of the phase current. This functionality is included according to ordercode selection.

The power quality function (PQVPH-1) is used to measure the harmonic contents of the phase voltages. This functionality is included according to ordercode selection.

The power quality function (PQSS-1) is used to measure the voltage variation i.e. sags and swells. This functionality is included according to ordercode selection.

The load profile (LoadProf) function is also included into measurements sheet. The load profile function offers ability to observe the history of the loading of the corresponding feeder.

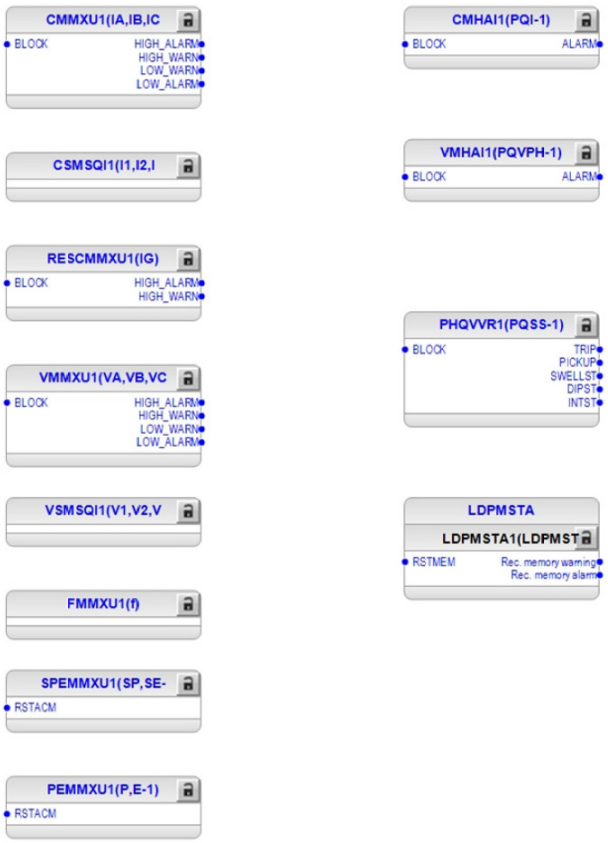

Figure 84: Current measurements and load profile function

3.5.10 Functional diagrams for other functions

Configuration also includes other miscellaneous basic functions which are not configured, but can be used for creating general purpose logics. These functions include:

- Four instance of Minimum Pulse Timer TP-1, TP-2, TP-3 and TP-4,
- Two instance of Pulse Timer PT-1 and PT-2,
- Two instance of Time delay off TOF-1 and TOF-2,
- Two instance of Time delay on TON-1 and TON-2,
- Two instance of Set reset logic SR-1 and SR-2 and
- Two instance of Move logic MV-1 and MV-2

3.5.11 Functional diagrams for logging functions

The disturbance recorder DFR consists of 64 channels. However as default few channel are connected to trigger the digital fault recorder are as shown in Figure 85. More connection can be made as per individual need. Also when disturbance recorder is triggered the analog values available at the analog inputs are recorded by fault recorder FR.

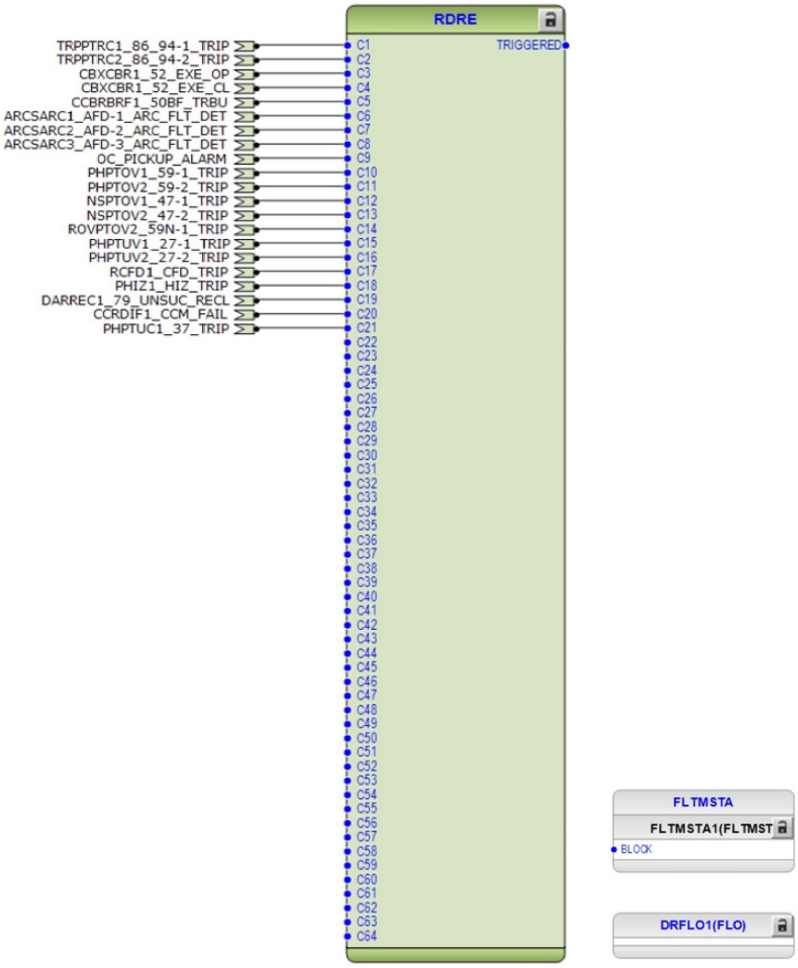

Figure 85: 64 channel Disturbance and fault recorder

3.5.12 Functional diagrams for I/O and Alarm LEDs

The default binary I/O connected in the configuration and Alarm LEDs are indicated in Figure 86 to Figure 89.

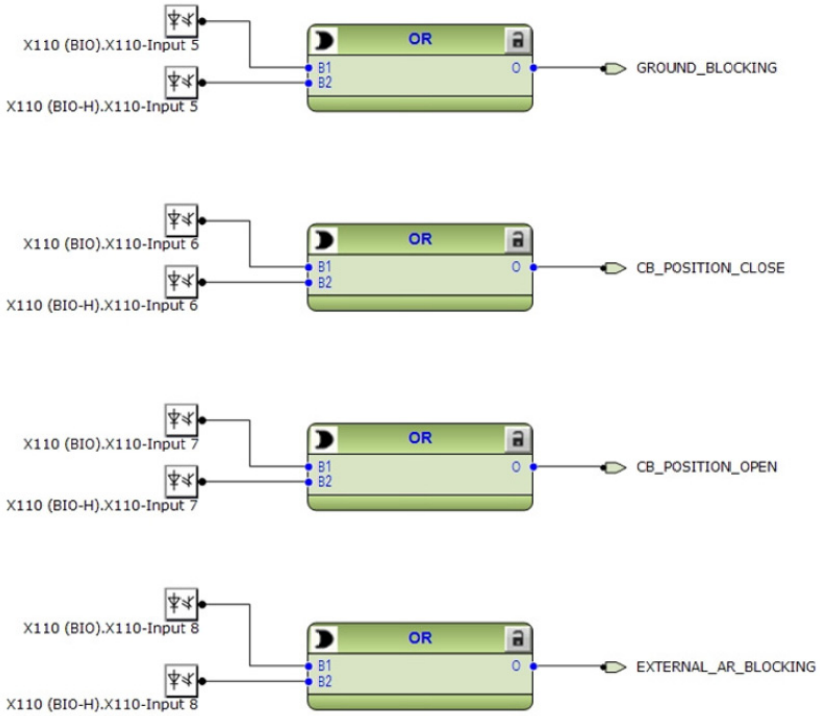

Figure 86: Binary inputs

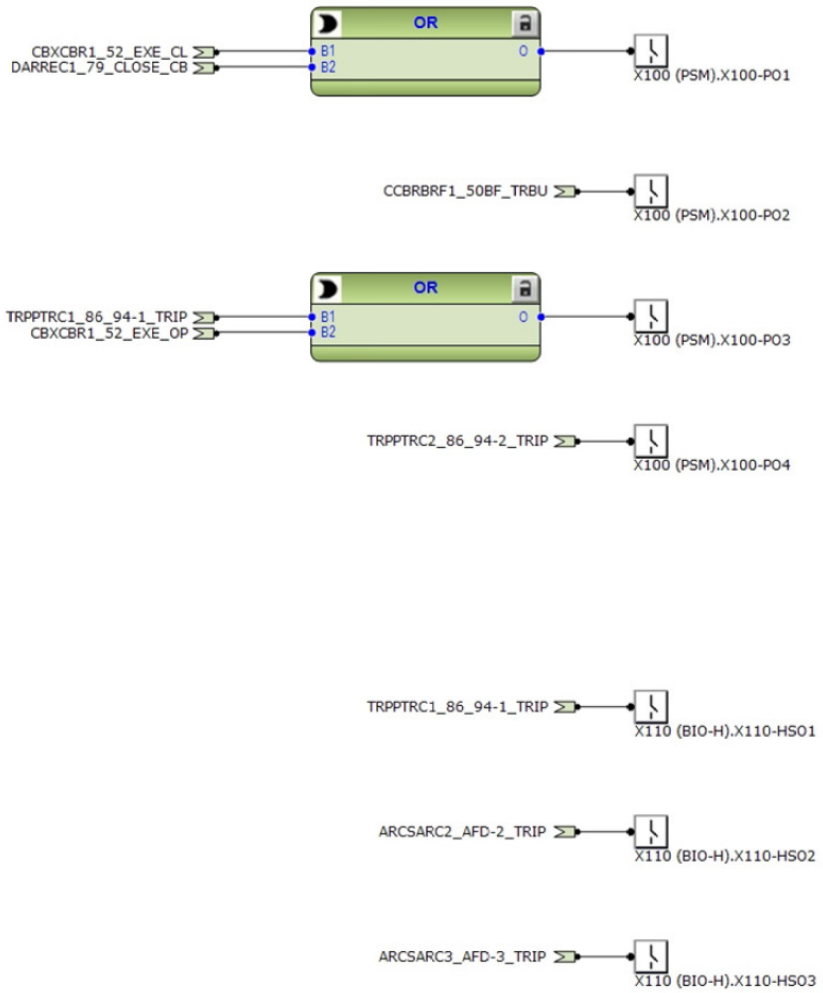

Figure 87: Binary outputs

High speed binary outputs (HSO) are available only if IED with High speed binary card has been ordered.

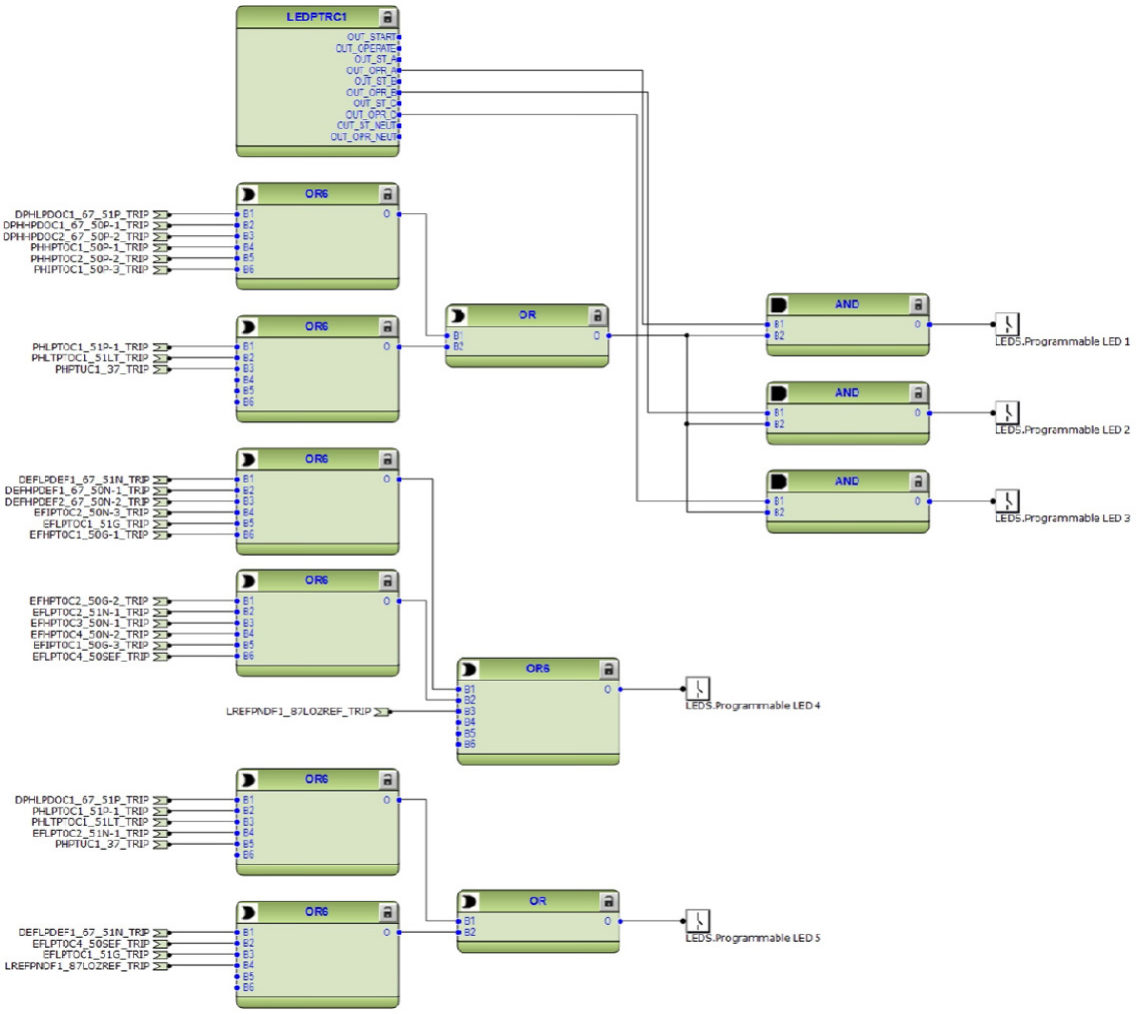

Figure 88: *Alarm LEDs 1 – 5*

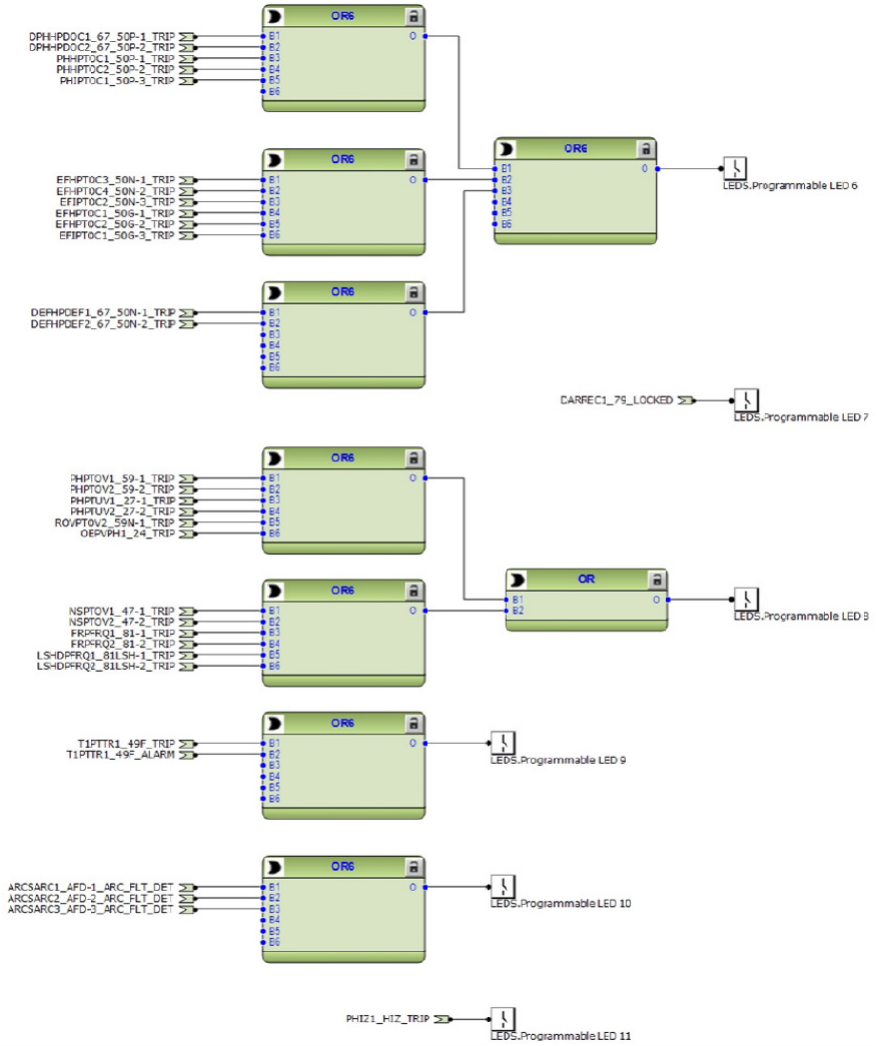

Figure 89: *Alarm LEDs 6 – 11*

3.6 Standard Configuration for Order Code Functional Applications D

3.6.1 Applications

This standard configuration is mainly intended for distribution feeders and a single breaker. With the directional phase and ground overcurrent, voltage and frequency protection, synch check and power system metering, this configuration can be applied for radial and loop feeders and intertie connections. It can also be applied for bus protection and automatic bus transfer schemes.

The IED with this standard configuration is delivered from the factory with default settings and parameters. The end-user flexibility for incoming, outgoing and internal signal designation within the IED enable this configuration to be further adapted to different primary power system layouts and the related functionality needs by modifying the internal functionality using PCM600.

3.6.2 Functions

Table 24: Functions included in the REF615 standard configuration

Software Configuration				D	
Function	IEC 61850	REF615	IEC 60617	DA	DB
Protection					
Three-phase non-directional overcurrent protection, low stage, instance 1	PHLPTOC1	51P-1	3I> (1)	●	●
Three-phase non-directional overcurrent protection, high stage, instance 1	PHHPTOC1	50P-1	3I>> (1)	●	●
Three-phase non-directional overcurrent protection, high stage, instance 2	PHHPTOC2	50P-2	3I>> (2)	●	●
Three-phase non-directional overcurrent protection, instantaneous stage, instance 1	PHIPTOC1	50P-3	3I>>> (1)	●	●
Three-phase non-directional long time overcurrent protection, low stage, instance 1	PHLTPTOC1	51LT	3I> (3)	●	●
Three-phase directional overcurrent protection, low stage, instance 1	DPHLPDOC 1	67/51P	3I> -> (1)	●	●
Three-phase directional overcurrent protection, high stage, instance 1	DPHHPDOC 1	67/50P-1	3I>> -> (1)	●	●
Three-phase directional overcurrent protection, high stage, instance 2	DPHHPDOC 2	67/50P-2	3I>> -> (2)	●	●
Non-directional ground-fault protection, low stage, instance 1	EFLPTOC1	51G	Io> (1)	●	-
Non-directional ground-fault protection, low stage, instance 2	EFLPTOC2	51N-1	Io> (2)	●	●
Non-directional ground-fault protection, low stage, instance 4	EFLPTOC4	50SEF	Io> (4)	-	●
Non-directional ground-fault protection, high stage, instance 1	EFHPTOC1	50G-1	Io>> (1)	●	-
Non-directional ground-fault protection, high stage, instance 2	EFHPTOC2	50G-2	Io>> (2)	●	-
Non-directional ground-fault protection, high stage, instance 3	EFHPTOC3	50N-1	Io>> (3)	●	●
Non-directional ground-fault protection, high stage, instance 4	EFHPTOC4	50N-2	Io>> (4)	●	●
Non-directional ground-fault protection, instantaneous stage, instance 1	EFIPTOC1	50G-3	Io>>> (1)	●	-
Non-directional ground-fault protection, instantaneous stage, instance 2	EFIPTOC2	50N-3	Io>>> (2)	●	●
Directional ground-fault protection, low stage, instance 1	DEFLPDEF1	67/51N	Io> -> (1)	● 1,2)	● 1,2)
Directional ground-fault protection, high stage, instance 1	DEFHPDEF1	67/50N-1	Io>> -> (1)	● 1,2)	● 1,2)
Directional ground-fault protection, high stage, instance 2	DEFHPDEF2	67/50N-2	Io>> -> (2)	● 1,2)	● 1,2)
Three phase directional power protection, instance 1	DPSRDIR1	32P-1	I1-> (1)	● -	● -
Ground directional power protection, instance 1	DNZSRDIR1	32N-1	I2 ->, Io-> (1)	● 1,2)	● 1,2)

Software Configuration				D	
Function	IEC 61850	REF615	IEC 60617	DA	DB
Negative-sequence overcurrent protection, instance 1	NSPTOC1	46-1	I2> (1)	•	•
Negative-sequence overcurrent protection, instance 2	NSPTOC2	46-2	I2> (2)	•	•
Phase discontinuity protection	PDNSPTOC 1	46PD	I2/I1>	•	•
Residual overvoltage protection, instance 1	ROVPTOV1	59G	Uo> (1)	•	•
Residual overvoltage protection, instance 2	ROVPTOV2	59N-1	Uo> (2)	•	•
Three-phase undervoltage protection, instance 1	PHPTUV1	27-1	3U< (1)	•	•
Three-phase undervoltage protection, instance 2	PHPTUV2	27-2	3U< (2)	•	•
Three-phase overvoltage protection, instance 1	PHPTOV1	59-1	3U> (1)	•	•
Three-phase overvoltage protection, instance 2	PHPTOV2	59-2	3U> (2)	•	•
Negative-sequence overvoltage protection, instance 1	NSPTOV1	47-1	U2> (1)	•	•
Negative-sequence overvoltage protection, instance 2	NSPTOV2	47-2	U2> (2)	•	•
Frequency protection, instance 1	FRPFRQ1	81-1	f>/f<,df/dt (1)	•	•
Frequency protection, instance 2	FRPFRQ2	81-2	f>/f<,df/dt (2)	•	•
Three-phase thermal protection for feeders, cables and distribution transformers, Instance 1	T1PTTR1	49F-1	3Ith>F (1)	•	•
Numerical stabilized low impedance restricted ground-fault protection	LREFPNDF1	87LOZREF	dIoLo>	•	-
Circuit breaker failure protection, instance 1	CCBRBRF1	50BF-1	3I>/Io>BF (1)	•	•
Three-phase inrush detector, instance 1	INRPHAR1	INR-1	3I2f> (1)	•	•
Master trip, instance 1	TRPPTRC1	86/94-1	Master Trip (1)	•	•
Master trip, instance 2	TRPPTRC2	86/94-2	Master Trip (2)	•	•
Arc protection, instance 1	ARCSARC1	AFD-1	ARC (1)	•	•
Arc protection, instance 2	ARCSARC2	AFD-2	ARC (2)	•	•
Arc protection, instance 3	ARCSARC3	AFD-3	ARC (3)	•	•
High impedance fault detection	PHIZ1	HIZ	PHIZ1	-	•
Load shedding and restoration, instance 1	LSHDPFRQ1	81LSH-1	UFLS/R (1)	•	•
Load shedding and restoration, instance 2	LSHDPFRQ2	81LSH-2	UFLS/R (2)	•	•
Loss of phase, instance 1	PHPTUC1	37-1	3I< (1)	•	•

Software Configuration				D	
Function	IEC 61850	REF615	IEC 60617	DA	DB
Control					
Circuit-breaker control, instance 1	CBXCBR1	52-1	I <-> O CB (1)	●	●
Auto-reclosing	DARREC1	79	O -> I	●	●
Synchronism and energizing check	SECRSYN1	25	SYNC	●	●
Condition Monitoring					
Circuit-breaker condition monitoring, instance 1	SSCBR1	52CM-1	CBCM (1)	●	●
Trip circuit supervision, instance 1	TCSSCBR1	TCM-1	TCS (1)	●	●
Trip circuit supervision, instance 2	TCSSCBR2	TCM-2	TCS (2)	●	●
Current circuit supervision	CCRDIF1	CCM	MCS 3I	●	●
Fuse failure supervision, instance 1	SEQRFUF1	60-1	FUSEF (1)	●	●
Cable fault detection	RCFD1	CFD	RCFD1	●	●
Measurement					
Three-phase current measurement, instance 1	CMMXU1	IA, IB, IC	3I	●	●
Sequence current measurement, instance 1	CSMSQI1	I1, I2, I0	I1, I2, I0	●	●
Residual current measurement, instance 1	RESCMMXU 1	IG	Io	●	●
Three-phase voltage measurement, instance 1	VMMXU1	VA, VB, VC	3U	●	●
Residual voltage measurement, instance 1	RESVMMXU 1	VG	Uo	●	●
Sequence voltage measurement, instance 1	VSMSQI1	V1, V2, V0	U1, U2, U0	●	●
Single-phase power and energy measurement, instance 1	SPEMMXU1	SP, SE-1	SP, SE	●	●
Three-phase power and energy measurement, instance 1	PEMMXU1	P, E-1	P, E	●	●
Current total demand distortion, instance 1	CMHAI1	PQI-1	PQM3I	●	●
Voltage total harmonic distortion, instance 1	VMHAI1	PQVPH-1	PQM3U	●	●
Voltage variation, instance 1	PHQVVR1	PQSS-1	PQ 3U<>	●	●
Load profile	LDPMSTA1	LoadProf	-	●	●
Frequency measurement, instance 1	FMMXU1	f	f	●	●
Other functions					
Minimum pulse timer (2 pcs), instance 1	TPGAPC1	TP 1	TP (1)	●	●
Minimum pulse timer (2 pcs), instance 2	TPGAPC2	TP 2	TP (2)	●	●
Minimum pulse timer (2 pcs), instance 3	TPGAPC3	TP 3	TP (3)	●	●
Minimum pulse timer (2 pcs), instance 4	TPGAPC4	TP 4	TP (4)	●	●

Software Configuration				D	
Function	**IEC 61850**	**REF615**	**IEC 60617**	**DA**	**DB**
Minimum pulse timer (2 pcs, second resolution), instance 1	TPSGAPC1	62CLD-1	TPS (1)	•	•
Minimum pulse timer (2 pcs, minute resolution), instance 1	TPMGAPC1	62CLD-2	TPM (1)	•	•
Pulse timer (8 pcs), instance 1	PTGAPC1	PT-1	PT (1)	•	•
Pulse timer (8 pcs), instance 2	PTGAPC2	PT-2	PT (2)	•	•
Time delay off (8 pcs), instance 1	TOFGAPC1	TOF-1	TOF (1)	•	•
Time delay off (8 pcs), instance 2	TOFGAPC2	TOF-2	TOF (2)	•	•
Time delay on (8 pcs), instance 1	TONGAPC1	TON -1	TON (1)	•	•
Time delay on (8 pcs), instance 2	TONGAPC2	TON -2	TON (2)	•	•
Set reset (8 pcs), instance 1	SRGAPC1	SR-1	SR (1)	•	•
Set reset (8 pcs), instance 2	SRGAPC2	SR-2	SR (2)	•	•
Move (8 pcs), instance 1	MVGAPC1	MV-1	MV (1)	•	•
Move (8 pcs), instance 2	MVGAPC2	MV-2	MV (2)	•	•
Logging functions					
Disturbance recorder	RDRE1	DFR	-	•	•
Fault recorder	FLMSTA1	FR	-	•	•
Sequence event recorder	SER	SER	-	•	•
Fault location	DRFLO1	FLO	FLO	•	•

1) Io selectable by parameter, **I2** as default

2) Vo calculated and negative sequence voltage selectable by parameter, V2 as default

3.6.3 Default I/O connections

Table 25: Default connections for binary inputs

Binary input	Default usage	Connector pins
X110-BI1		X110-1,2
X110-BI2		X110-3,4
X110-BI3		X110-5,6
X110-BI4		X110-7,6
X110-BI5	Ground blocking	X110-8,9
X110-BI6	Circuit Breaker 1 close status	X110-10,9
X110-BI7	Circuit Breaker 1 open status	X110-11,12
X110-BI8	AR blocking	X110-13,12
X120-BI1		X120-1,2
X120-BI2		X120-3,2
X120-BI3		X120-4,2
X120-BI4		X120-5,6
X130-BI1		X130-1,2
X130-BI2		X130-3,4
X130-BI3		X130-5,6
X130-BI4		X130-7,8

Table 26: Default connections for binary outputs

Binary output	Default usage	Connector pins
X100-PO1	Close circuit breaker	X100 – 6,7
X100-PO2	Breaker failure backup trip to upstream breaker	X100 – 8,9
X100-SO1		
X100-SO2		
X100-PO3	Open circuit breaker / Master Trip (1)	X100 – 15,16,17,18,19
X100-PO4	Open circuit breaker / Master Trip (2)	X100 – 20,21,22,23,24
X110-SO1		X110-14,15,16
X110-SO2		X110-17,18,19
X110-SO3		X110-20,21,22
X110-SO4		X110-23,24
X110-HSO1	Master Trip (1) / Trip from ARC-1 protection	X110 – 15,16
X110-HSO2	Trip from ARC-2 protection	X110 – 19,20
X110-HSO3	Trip from ARC-3 protection	X110 – 23,24

Table 27: Default connections for LEDs

LED	LED label
LED 1	Phase A
LED 2	Phase B
LED 3	Phase C
LED 4	Neutral / Ground, Neutral / SEF
LED 5	Time
LED 6	Instantaneous
LED 7	Recloser lockout
LED 8	Voltage / Frequency
LED 9	Synchronism
LED 10	Arc Flash Detection
LED 11	HIZ Detection

3.6.4 Typical connection diagrams

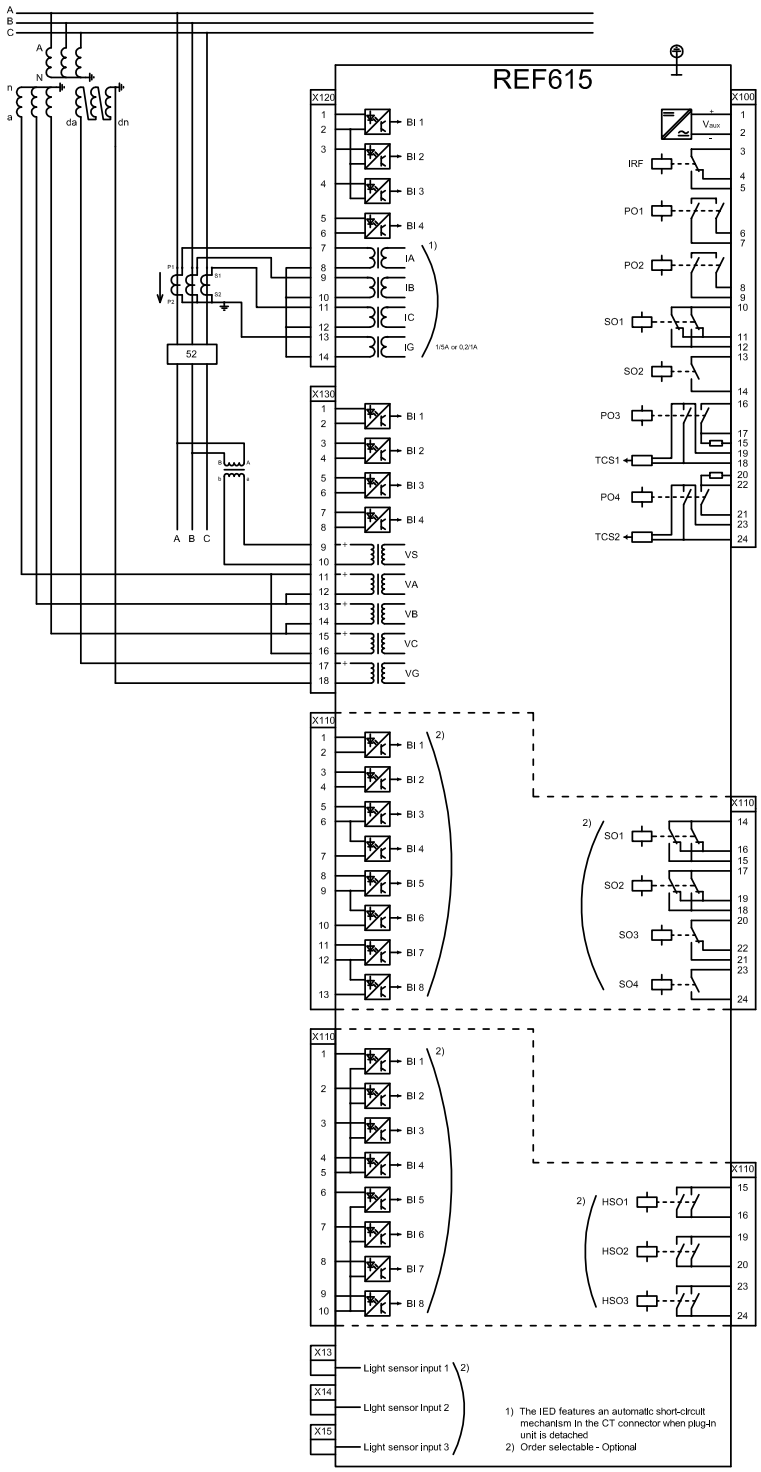

3.6.5 Functional diagrams

The functional diagrams describe the default input, output, alarm LED and function-to-function connections. The default connections can be viewed with and changed with PCM 600 according to the application requirements, if necessary.

The analog channels, measurements from CTs, have fixed connections to the different function blocks inside the IED's standard configuration.

The signal marked with IA, IB and IC represents the three phase currents. The signal IG represents the measured ground current.

The signal marked with VA, VB and VC represents the three phase voltages. The signal VG represents the measured ground voltage.

REF615 offers six different settings group which the user can set based on individual needs. Each group can then, be activated/ deactivated by using the setting group settings available in REF615.

3.6.6 Functional diagrams for protection

The functional diagrams describe the IED's protection functionality in detail and according to the factory set default connections.

Eight overcurrent stages totally are offered for overcurrent and short-circuit protection. Three of them include directional functionality. The non directional high stage (50P-1) and directional high stage (67/50P-1) will be blocked by cold load detection logic. The cold load detection logic starts from closing of the circuit breaker and is active during set time. The cold load detection logic´s active time can be set in a resolution of minutes or seconds to the functions TPSGAPC and TPMGAPC.

The directional overcurrent and short circuit protection will be blocked by default also if the fuse failure situation is detected.

The inrush detection block's (INR-1) output BLK2H offers the possibility to either block the function or multiply the active settings for any of the shown protection function blocks.

All trip signals are connected to the Master Trip and also to the alarm LEDs. Alarm LEDs 1, 2 and 3 are used for phase segregated information of current based faults. The alarm LED5 is used to indicate time delayed trips and the alarm LED6 instantaneous trips of the current based protection functions.

The pickup information of all overcurrent functions is collected to the variable OC_PICKUP_ALARM and connected to the disturbance recorder. This signal can be mapped to the signal outputs depending on the application needs.

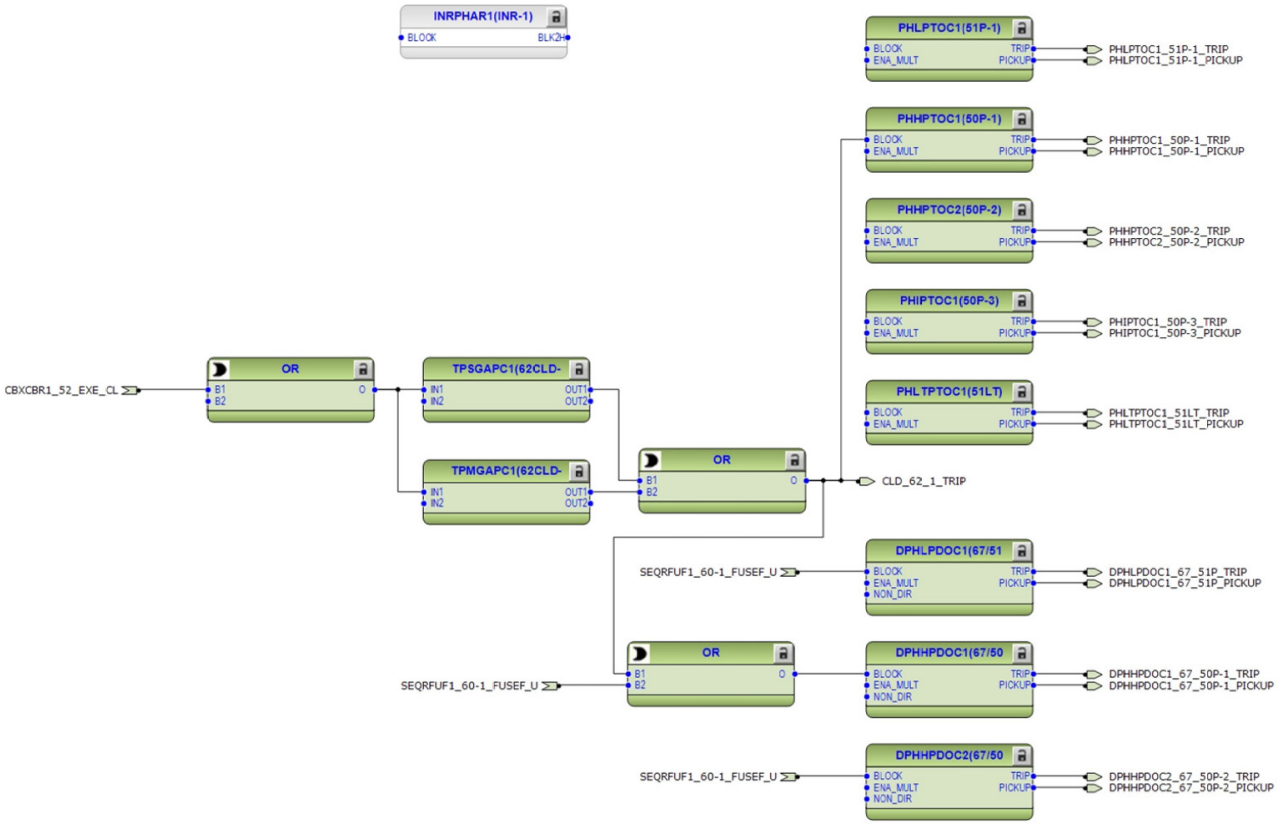

Figure 90: Three phase overcurrent protection

Four stages are provided to non-directional neutral overcurrent protection. Additionally depending on order option, one stage is offered as a sensitive ground fault protection. The neutral overcurrent protection uses calculated residual current component.

The operation of 51N, 51N-1, 51N-2 and 50SEF will be blocked if GROUND_BLOCKING input is active. The 50N-1 will also be blocked if the cold load detection logic is activated. The operation of neutral overcurrent protection functions is connected to alarm LED 4.

The alarm LED5 is used to indicate time delayed trips and the alarm LED6 instantaneous trips of the current based protection functions.

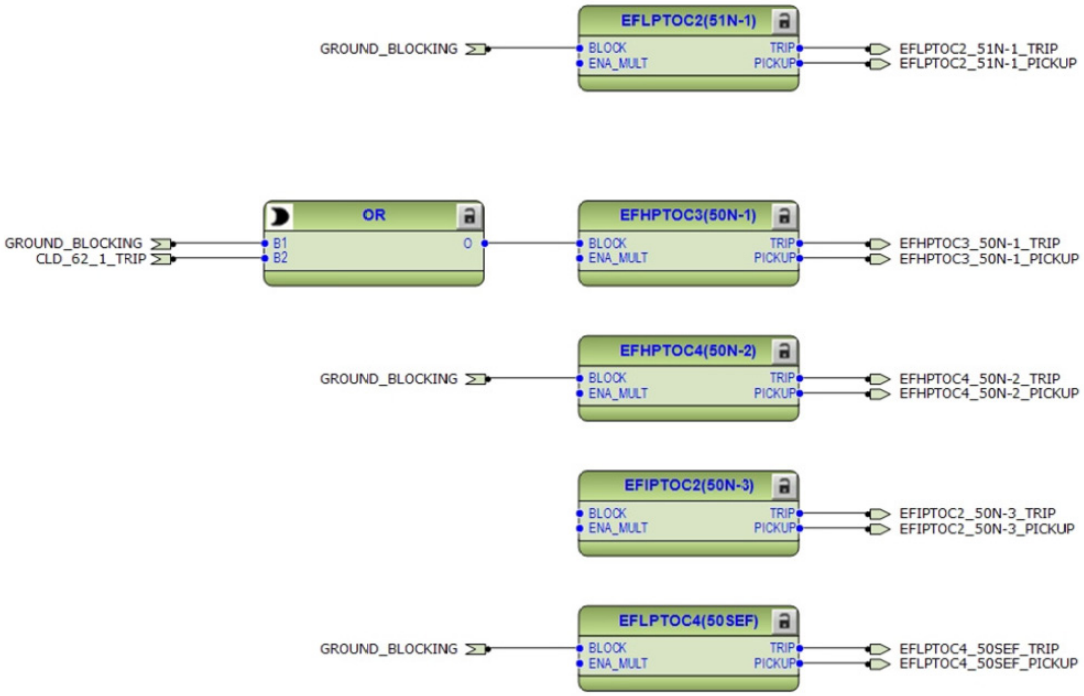

Figure 91: Non-directional neutral overcurrent protection

SEF and HIZ functions are included if sensitive SEF/HIZ measuring option is used.

Four stages are provided to non-directional ground fault protection. Additionally depending on order option, one stage is offered as a sensitive ground fault protection. The ground fault protection uses measured residual current component.

The operation of 51G, 51G-1 and 51G-2 will be blocked if GROUND_BLOCKING input is active. The 50G-1 will also be blocked if the cold load detection logic is activated. The operation of neutral overcurrent protection functions is connected to alarm LED 4.

The alarm LED5 is used to indicate time delayed trips and the alarm LED6 instantaneous trips of the current based protection functions.

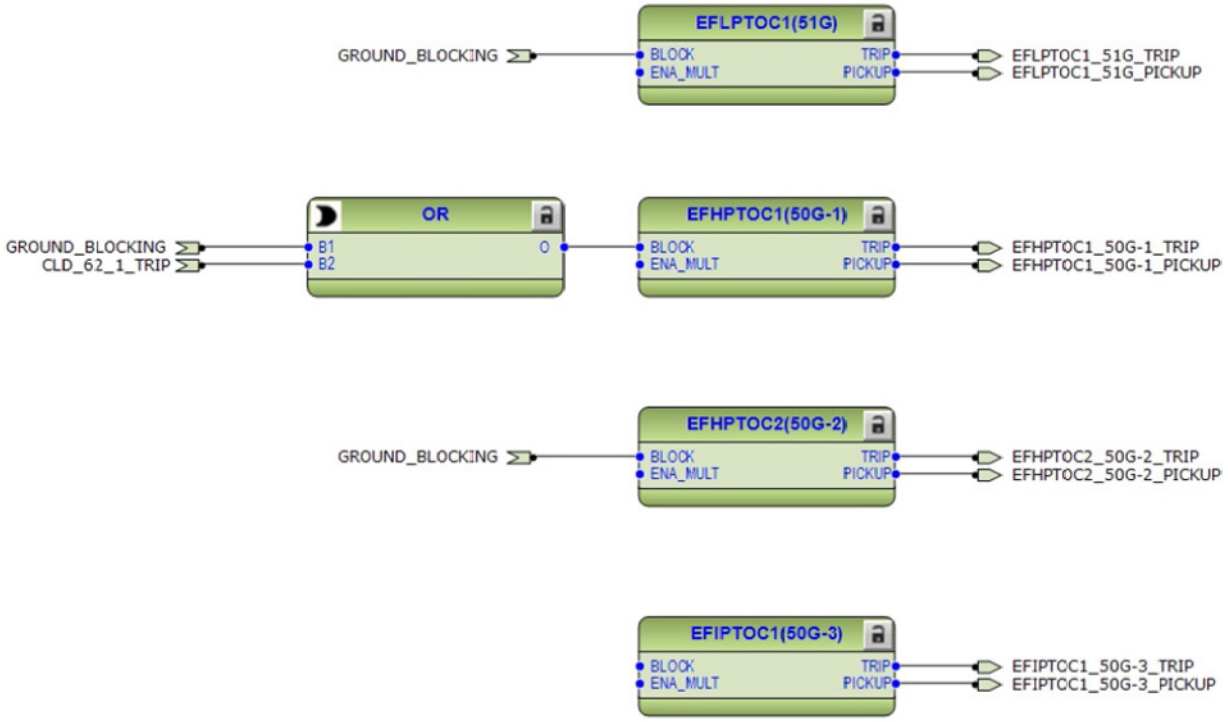

Figure 92: Non-directional neutral overcurrent protection

51G, 50G-1, 50G-2 and 50G-3 are included if ground measuring option is used.

Three stages are offered for directional ground-fault protection. By default the stages (67/51N) and (67/50N-1) will be blocked by activating the GROUND_BLOCKING input. If the cold load situation is detected the (67/50N-1) function will be blocked. Also if the fuse failure situation is detected all directional ground-fault protection functions will be blocked.

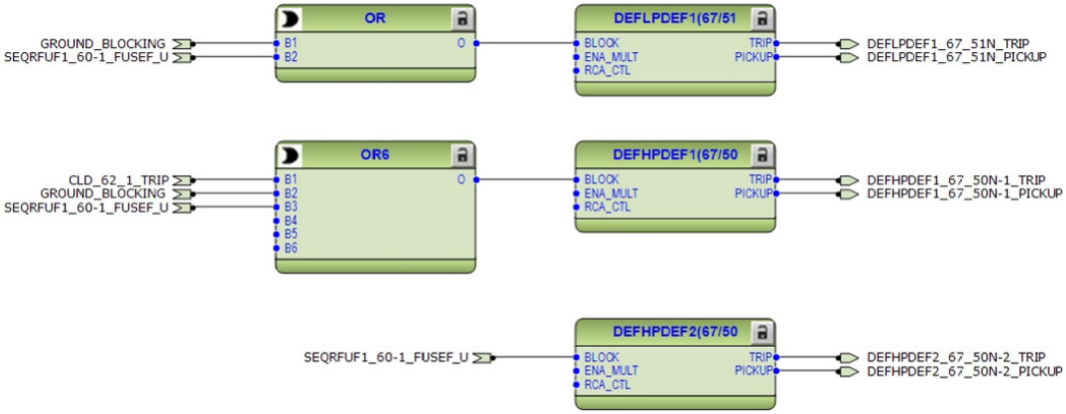

Figure 93: Directional neutral overcurrent protection

Two negative-sequence overcurrent protection (46-1 and 46-2) stages are provided for phase unbalance protection. These functions are used to protect the feeder against phase unbalance.

The phase discontinuity protection (46PD) provides protection for interruptions in the normal three-phase load supply, like in downed conductor situations.

The operation of 46-1, 46-2 and 46PD is not blocked as default by any functionality. The operation of these protection functions is connected to alarm LED 5. The pickup signals are connected to OC_PICKUP_ALARM variable in logic.

The undercurrent protection function (37-1) is offered for protection against loss of phase situations. The trip signal is connected to the disturbance recorder only by default.

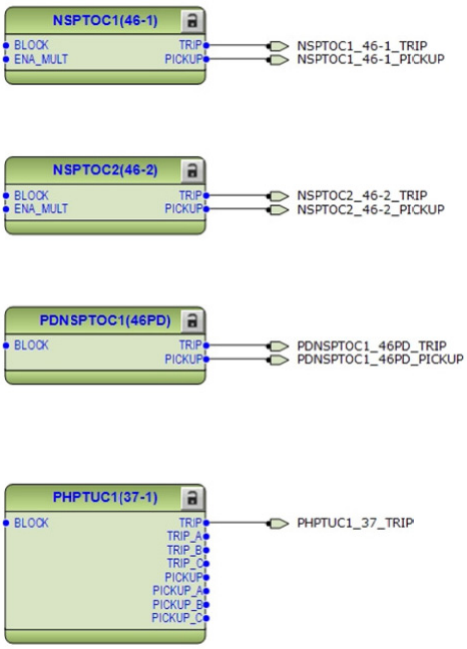

Figure 94: *Negative sequence, phase discontinuity and undercurrent protection*

All overcurrent pickup signals are merged together as variable OC_PICKUP_ALARM. This alarm is by default connected to disturbance recorder channel. It can be mapped also e.g. for alarming or blocking purposes to the binary output relays.

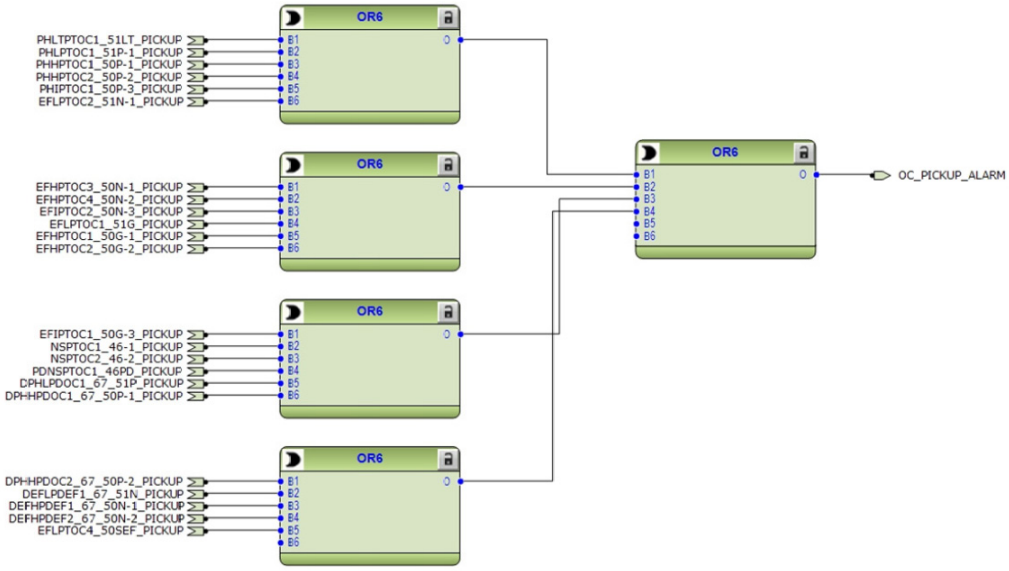

Figure 95: *Overcurrent pickup alarm*

The directional positive sequence over power protection (32P-1) and directional negative sequence over power protection (32N-1) are offered in configuration. The output information of these functions can be used e.g. releasing or blocking purposes but by the default those are not connected. Directional power protection functions are blocked by default configuration connection if fuse failure is detected.

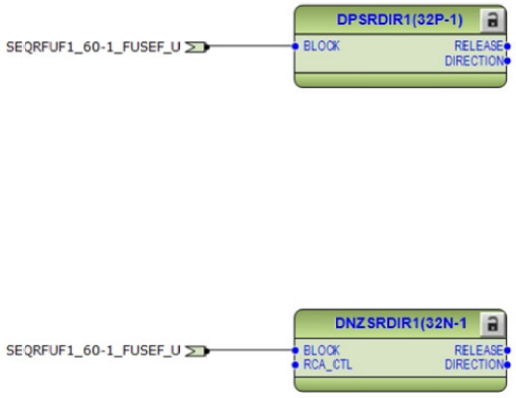

Figure 96: Directional power protection

Two overvoltage and undervoltage protection stages (27-1, 27-2 and 59-1, 59-2) offer protection against abnormal phase voltage conditions. The operation of voltage functions is connected to alarm LED8. A failure in the voltage measuring circuit is detected by the fuse failure function and the activation is connected to undervoltage protection functions to avoid faulty undervoltage tripping.

Negative-sequence overvoltage (47-1 and 47-2) protection functions enable voltage-based unbalance protection. The operation signals of voltage-sequence functions are connected to alarm LED8, which is a combined voltage protection alarm LED.

The residual overvoltage protection (59N-1) provides ground-fault protection by detecting abnormal level of residual voltage. It can be used, for example, as a nonselective backup protection for the selective directional ground-fault functionality. The operation signal is connected to alarm LED8.

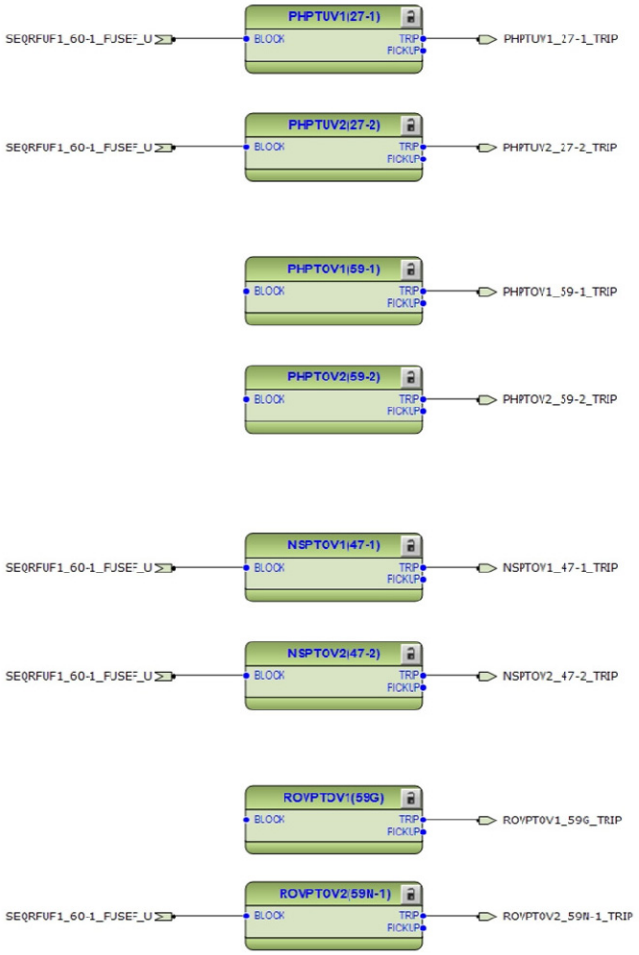

Figure 97: *Voltage protection functions*

The thermal overload protection function (49F-1) detects short and long term overloads under varying load conditions.

The trip of the thermal overload protection function is connected to the Master Trip1 and to alarm LED 9.

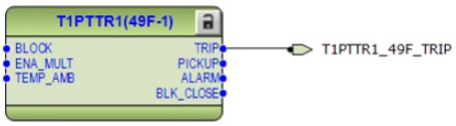

Figure 98: *Thermal overload protection*

According to the order code the configuration includes restricted low-impedance ground-fault protection function (87LOZREF). The function is available with functional application DA.

The numerical differential current stage operates exclusively on ground faults occurring in the protected area, that is, in the area between the phase and ground current transformers. An ground fault in this area appears as a differential current between the residual current of the phase currents and the neutral current of the conductor between the star-point of the transformer and ground.

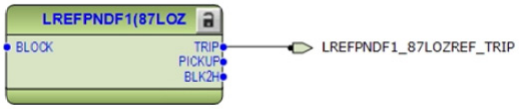

Figure 99: Low impedance restricted ground fault protection

The circuit-breaker failure protection (50BF) is initiated via the PICKUP input by a functions connected to the Master Trip 1 and by opening command of the circuit breaker. 50BF offers different operating modes associated with the circuit-breaker position and the measured phase and residual currents.

50BF has two operating outputs: TRRET and TRBU. The TRBU output can be used to give a backup trip to the circuit breaker feeding upstream. In the configuration the TRBU output signal is connected to the output PO2 (X100: 8-9).

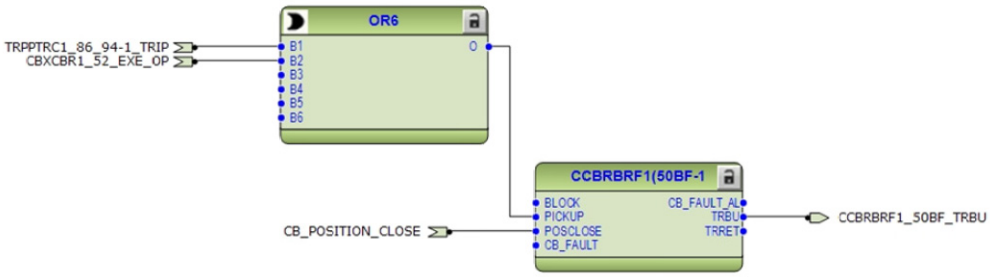

Figure 100: Circuit breaker failure protection

The TRRET operate output can be used for retripping its own circuit breaker through the Master Trip again. However this is not connected in present configuration.

Three arc protection (AFD-1, AFD-2 and AFD-3) stages are included as an optional function. The arc protection offers individual function blocks for three ARC sensors that can be connected to the IED. Each arc protection function block has two different operation modes, with or without the phase and residual current check.

Trip signal from AFD-1 is connected to Master trip 1, available at PO3 (X100: 15-19). Whereas the trip signal from AFD-2 and AFD-3 is connected to master trip 2, available at PO4 (X100: 20-24). The operation of these protection functions is connected to alarm LED 11.

If the IED has been ordered with high speed binary outputs, then trip signal from AFD-2 and AFD-3 are connected directly to high speed output HSO2 (X110:19-20) and HS03(X110:23-24) respectively.

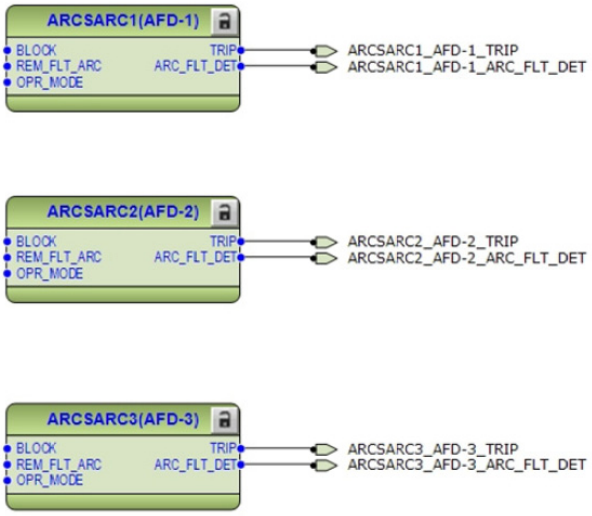

Figure 101: Arc protection

According to the order code the configuration includes high impedance fault protection function (HIZ). The function is available with functional application AC. The trip of the high impedance protection function is connected to the disturbance recorder and to the alarm LED 11.

Figure 102: High impedance fault protection

The selectable under frequency or over frequency protection (81-1 and 81-2) prevents damage to network components under unwanted frequency conditions.

Both functions contain a selectable rate of change of the frequency (gradient) protection to detect an increase or decrease in the fast power system frequency at an early stage. This can be used as an early indication of a disturbance in the system. The operation signals are connected to alarm LED8.

Two load shedding and restoration stages are offered in the standard configuration. The load shedding and restoration function (81LSH-1 and 81LSH-2) is capable of shedding load based on under frequency and the rate of change of the frequency. The load that is shed during the frequency disturbance can be restored once the frequency is stabilized to the normal level. Also manual restore commands can be given via binary inputs but by the default it is not connected. The operation signal is connected to the alarm LED 8.

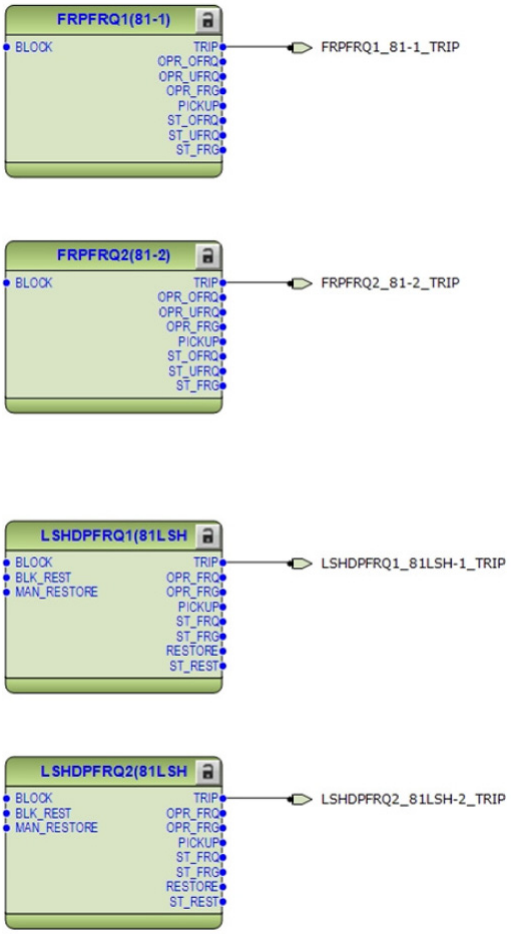

Figure 103: Frequency and Load shedding functions

Two master trip logics (86/94-1 and 86/94-2) are provided as a trip command collector. 86/94-1 collects the trip signals from 46, 46PD, 49F, 50P, 50N, 50G, 51LT, 51P, 51N, 51G, 67P, 67N, 81LSH-1, 87LOZREF, AFD-1 and SEF protection functions and is connected to trip output contact PO3 (X100:16-19) and also to high speed output HS01 (X110:15-16) for IEDs ordered with high speed binary output cards.

Open control commands to the circuit breaker from the local or remote is also connected directly to the output PO3 (X100:16-19) from circuit breaker control (52) function block.

86/94-2 collects the trip signals from AFD-2 and AFD-3 protection functions and is connected to trip output contact PO4 (X100:20-24).

86/94-1 and 86/94-2 provides the lockout/latching function, event generation and the trip signal duration setting. If the lockout operation mode is selected, one binary input can be reassigned to the RST_LKOUT input of the Master Trip to enable external reset with a push button.

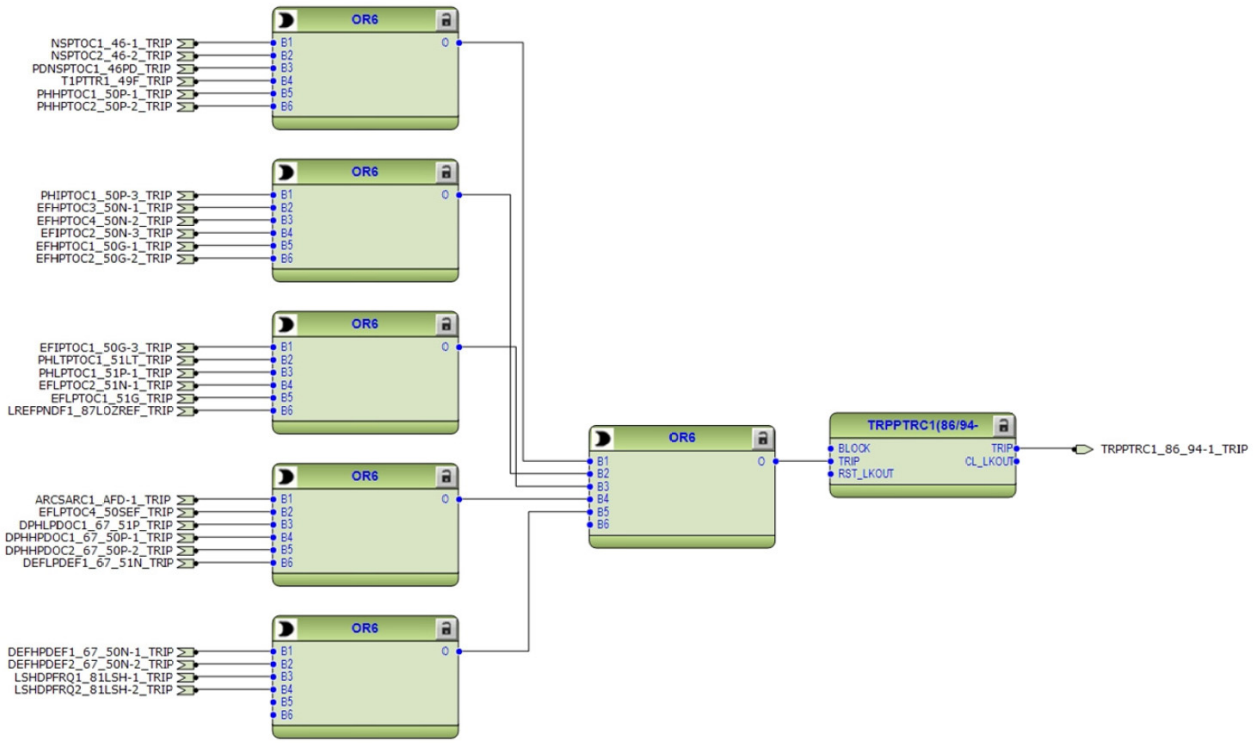

Figure 104: *Master trip logic 1*

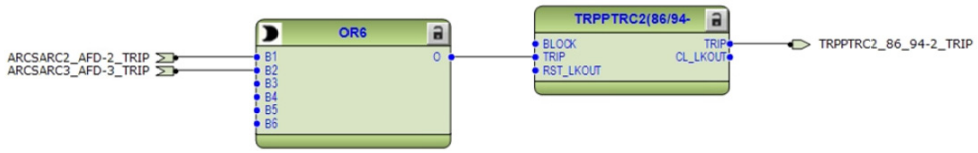

Figure 105: *Master trip logic 2*

3.6.7 Functional diagrams for control functions

The circuit breaker closing is enabled when the ENA_CLOSE input is activated. The input can be activated by the configuration logic, which is e.g. a combination of the disconnector or breaker truck and ground switch position status and the status of the Master Trip logics

and gas pressure alarm and circuit-breaker spring charging. With the present configuration, the activation of ENA_CLOSE input is configured using only Master Trip logic 86/94-1 and 86/94-2 i.e. the circuit breaker cannot be closed in case master trip is active.

The ITL_BYPASS input can be used, for example, to always enable the closing of the circuit breaker when the circuit breaker truck is in the test position, despite of the interlocking conditions being active when the circuit breaker truck is closed in service position.

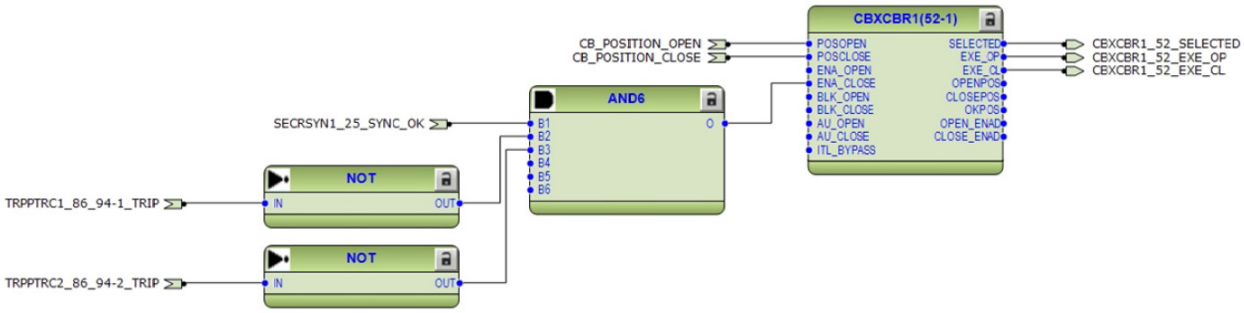

Figure 106: Circuit breaker control

If the ENA_CLOSE and BLK_CLOSE signals are completely removed from the breaker control function block 52 with PCM600, the function assumes that the breaker close commands are allowed continuously.

The autorecloser functionality (79) is configured to be initiated by operate signals from a number of protection stages through the INIT1...5 inputs. It is possible to create individual autoreclose sequences for each input.

The autoreclose function can be blocked with the INHIBIT_RECL input. By default, the operation of selected protection functions is connected to this input. A control command to the circuit breaker, either local or remote, also blocks the autoreclose function via the CBXCBR-selected signal. The circuit breaker availability for the autoreclosure sequence is expressed with the CB_READY input in DARREC1. In the configuration, this signal is not connected to any of the binary inputs. As a result, the function assumes that the breaker is available all the time.

The autoreclose locked status is connected to the alarm LED 7. The unsuccessful autoreclosing UNSUC_RECL is connected to the disturbance recorder.

The autoreclosing function is optional functionality and is included into configuration according to the ordercode.

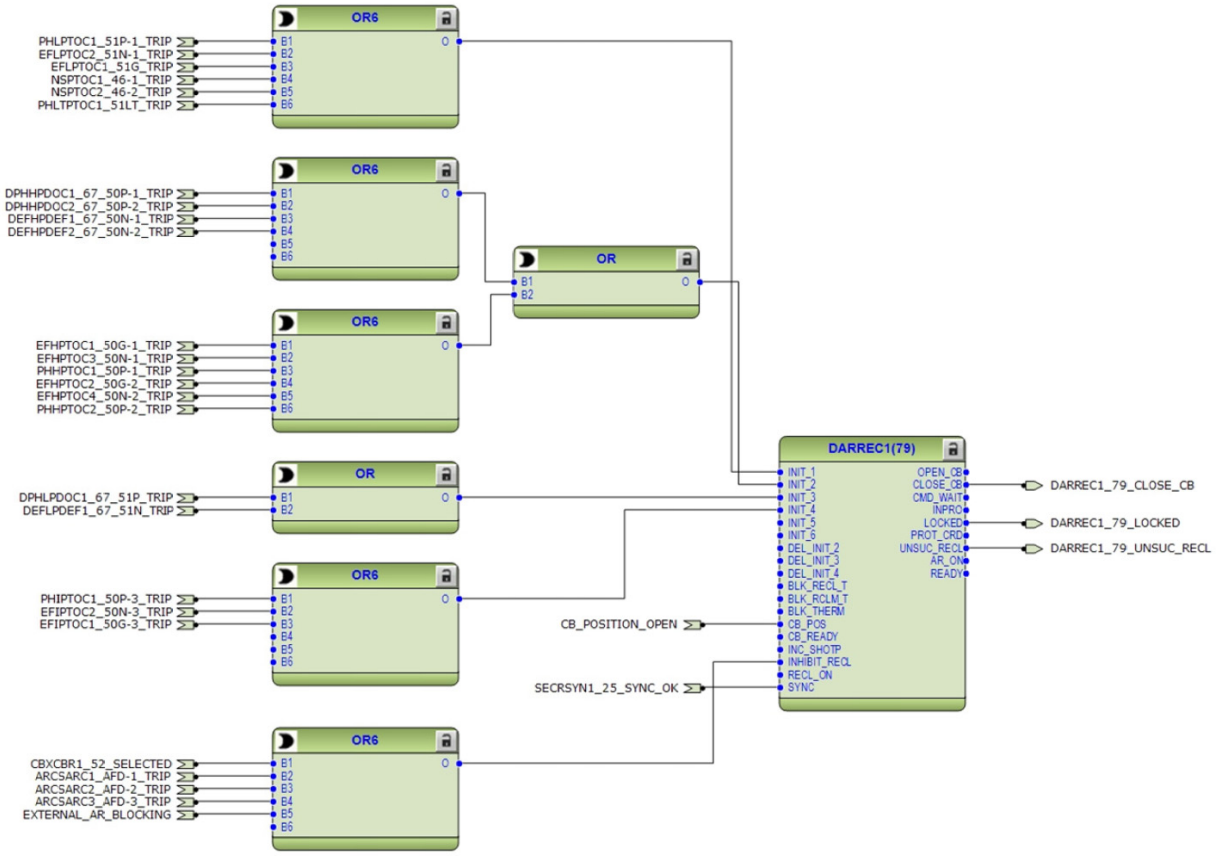

Figure 107: Autoreclosing

The synchro check function (25) is provided in standard configuration. The main purpose of the synchronism and energizing check is to provide control over the closing of the circuit breakers in power networks to prevent the closing if the conditions for synchronism are not detected. The energizing function allows closing, for example, when one side of the breaker is dead.

The synchro check function measures the bus and line voltages and compares them to set conditions. When all the measured quantities are within set limits, the output SYNC_OK is activated for allowing closing of the circuit breaker. The SYNC_OK output signal of (25) is connected to ENA_CLOSE input of (52-1) and to the SYNC input of the autoreclosing function (79) through control logic. Also the alarm LED9 will be activated by the SYNC_OK signal.

Figure 108: Synchro check function

3.6.8 Functional diagrams for condition monitoring

Two trip circuit monitoring (TCM-1 and TCM-2) stages are provided to supervise the trip circuit of the circuit breaker connected at PO3 (X100:15-19) and PO4 (X100:20-24).

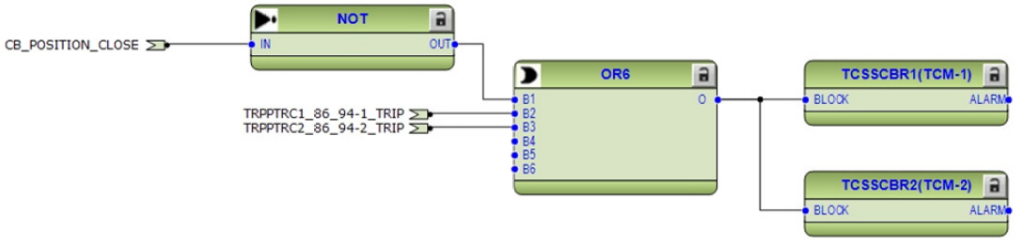

Figure 109: Trip circuit monitoring

The TCM-1 and TCM-2 functions are blocked by 86/94-1, 86/94-2 and when the circuit-breaker is not in closed position.

By default it is expected that there is no external resistor in the circuit breaker tripping/closing coil circuit connected parallel with circuit breaker normally open/closed auxiliary contact.

A failure in current measuring circuits is detected by current circuit supervision function (CCM). When a failure is detected, function activates and can be used to block protection functions which operates using calculated sequence component currents for example 46, thus avoiding mal-operation.

Figure 110: Current circuit supervision

By default the FAIL output from CCM function is only connected to disturbance recorder

The fuse failure supervision SEQRFUF1 detects failures in voltage measurement circuits. Failures, such as an open miniature circuit breaker, are detected and the alarm is connected to the few voltage based protection functions to avoid misoperation

Figure 111: Fuse failure monitoring

The circuit breaker condition monitoring function (52CM) supervises the circuit breaker status based on the binary input information connected and measured current levels. The function introduces various supervision alarms.

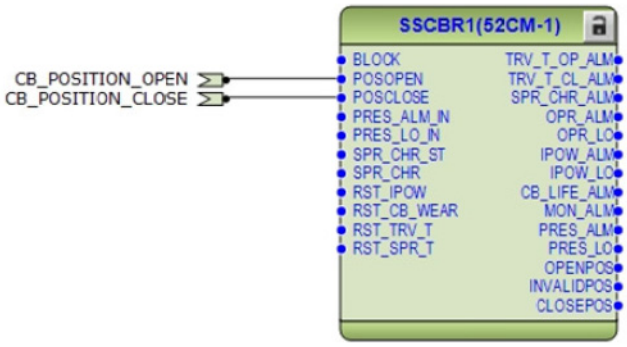

Figure 112: Circuit breaker condition monitoring

Cable fault detector (CFD) is offered for detecting self clearing in the feeder. The cable fault detector function is optional functionality and is included into configuration according to the ordercode.

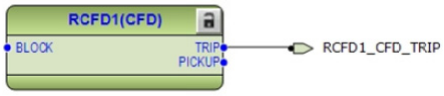

Figure 113: Cable fault detector

By default the TRIP output from CFD function is only connected to disturbance recorder

3.6.9 Functional diagrams for Measurements

The phase current inputs to the IED are measured by three-phase current measurement (IA, IB, IC) function block. The current input is connected to the X120 card in the back panel. Similarly the sequence and residual current are measured by sequence current measurement (I1, I2, I0) and residual current measurement (IG) function blocks respectively.

The phase voltage input is connected to the X130 card in the back panel. The voltages are measured by (VA,VB,VC) function block. Similarly the sequence and residual voltages are measured by sequence voltage measurement (V1, V2, V0) and residual current measurement (VG) function blocks respectively.

The measurements can be seen from the LHMI and is available using the measurement option in the menu selection. Based on the settings, function blocks can generate low alarm/warning, high alarm/warning signals for the measured current values.

The frequency measurement of the power system (f) is available. Also single (SPEMMXU1) and three phase (PEMXXU1) power measurements are available.

The power quality function (PQI-1) is used to measure the harmonic contents of the phase current. This functionality is included according to ordercode selection.

The power quality function (PQVPH-1) is used to measure the harmonic contents of the phase voltages. This functionality is included according to ordercode selection.

The power quality function (PQSS-1) is used to measure the voltage variation i.e. sags and swells. This functionality is included according to ordercode selection.

The load profile (LoadProf) function is also included into measurements sheet. The load profile function offers ability to observe the history of the loading of the corresponding feeder.

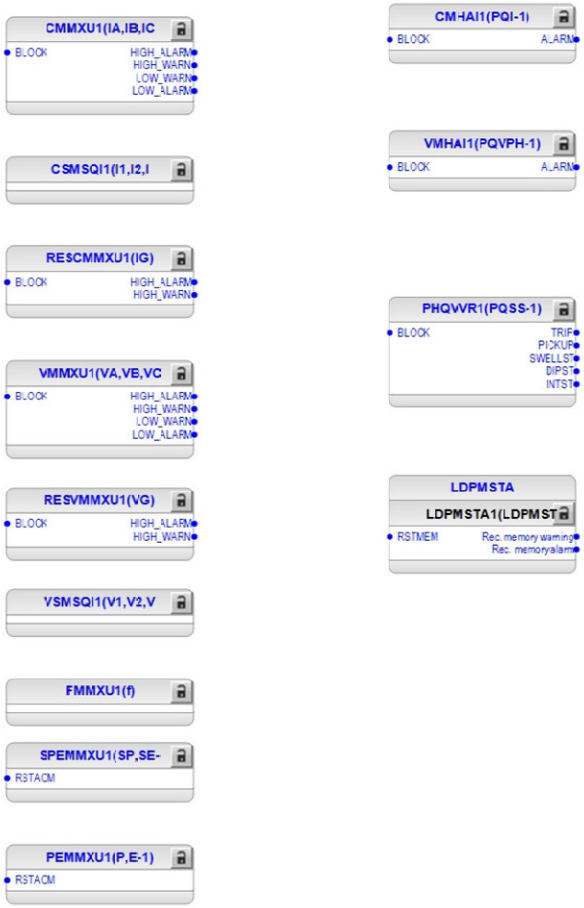

Figure 114: Current measurements and load profile function

3.6.10 Functional diagrams for other functions

Configuration also includes other miscellaneous basic functions which are not configured, but can be used for creating general purpose logics. These functions include:

- Four instance of Minimum Pulse Timer TP-1, TP-2, TP-3 and TP-4,
- Two instance of Pulse Timer PT-1 and PT-2,
- Two instance of Time delay off TOF-1 and TOF-2,
- Two instance of Time delay on TON-1 and TON-2,
- Two instance of Set reset logic SR-1 and SR-2 and
- Two instance of Move logic MV-1 and MV-2

3.6.11 Functional diagrams for logging functions

The disturbance recorder DFR consists of 64 channels. However as default few channel are connected to trigger the digital fault recorder are as shown in Figure 115. More connection can be made as per individual need. Also when disturbance recorder is triggered the analog values available at the analog inputs are recorded by fault recorder FR.

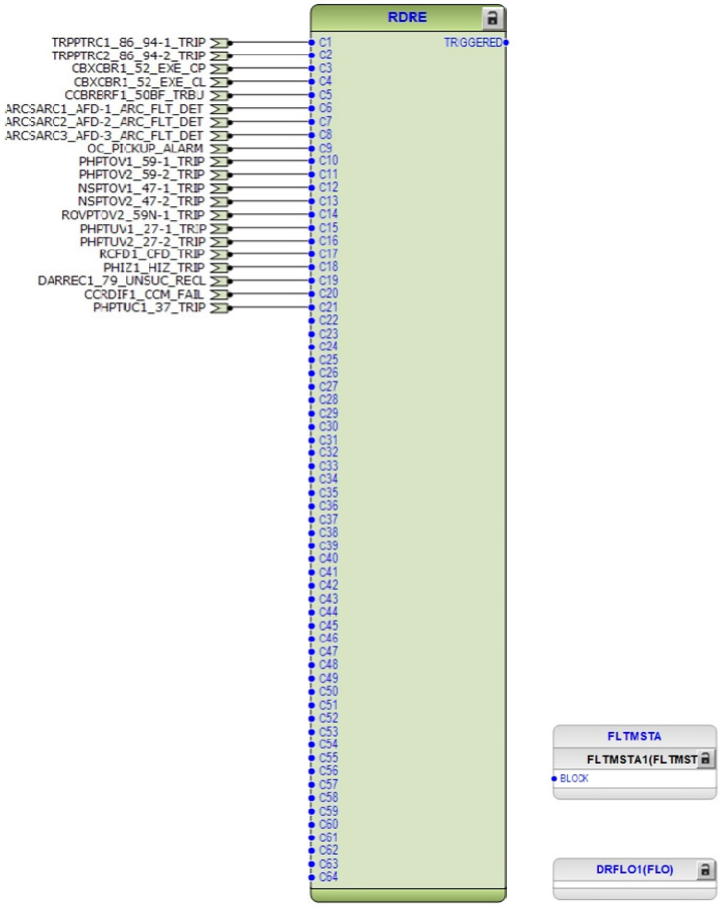

Figure 115: 64 channel Disturbance and fault recorder

3.6.12 Functional diagrams for I/O and Alarm LEDs

The default binary I/O connected in the configuration and Alarm LEDs are indicated in Figure 116 to Figure 119.

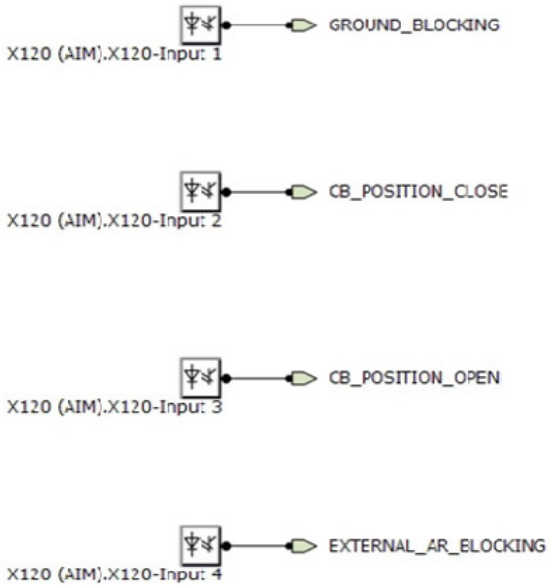

Figure 116: Binary inputs

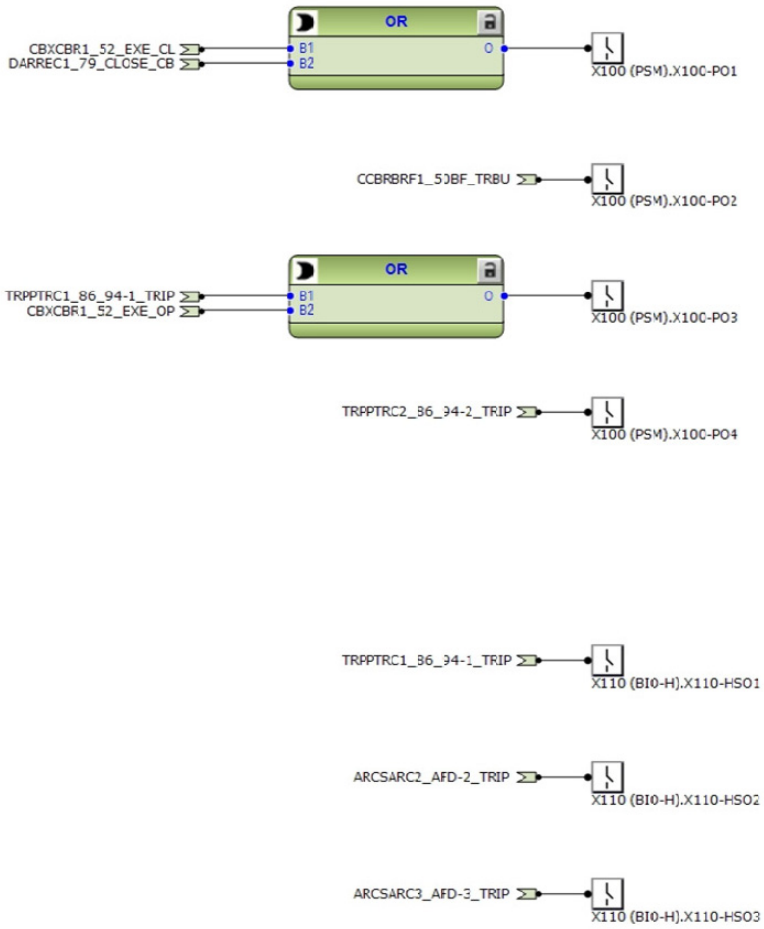

Figure 117: Binary outputs

High speed binary outputs (HSO) are available only if IED with High speed binary card has been ordered.

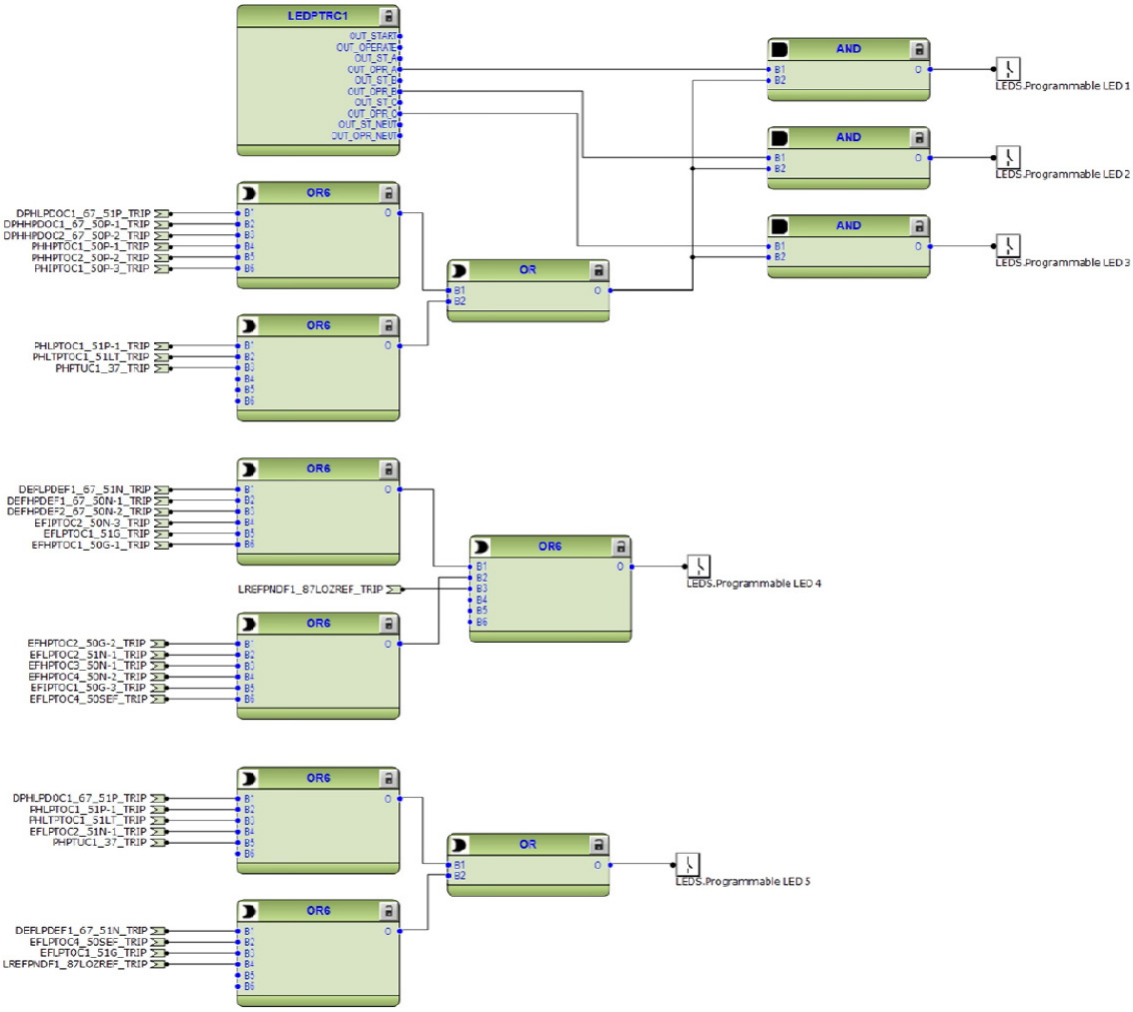

Figure 118: *Alarm LEDs 1 – 5*

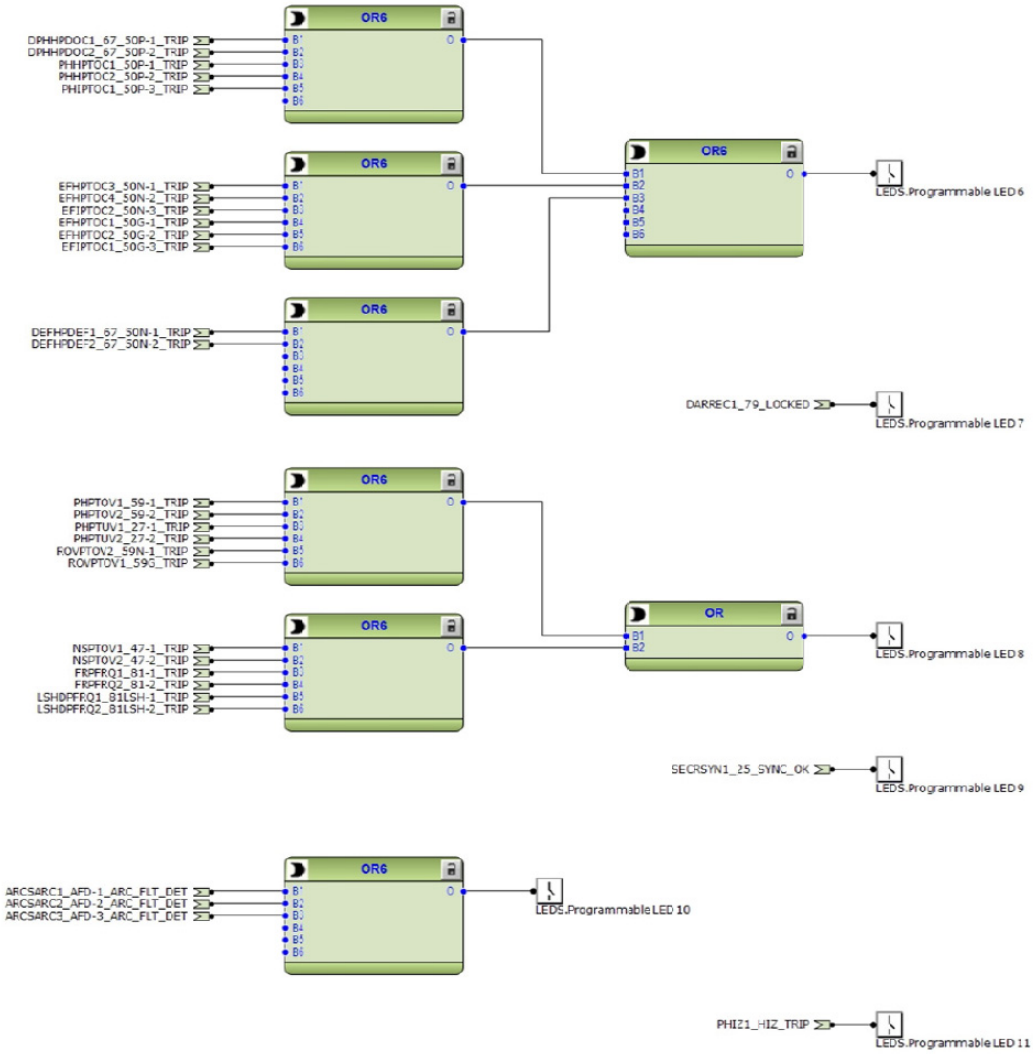

Figure 119: *Alarm LEDs 6 – 11*

3.7 Standard Configuration for Order Code Functional Applications E

3.7.1 Applications

This standard configuration is mainly intended for two distribution feeders and two breakers. With the numerous non-directional phase and ground overcurrent and voltage protection elements, this configuration can be applied for two radial feeders and, with the additional phase and ground power directional elements, for reverse power disconnects of two feeders. This configuration can also be applied for high-side and low-side transformer backup protection and automatic bus transfer schemes.

The IED with this standard configuration is delivered from the factory with default settings and parameters. The end-user flexibility for incoming, outgoing and internal signal designation within the IED enable this configuration to be further adapted to different primary power system layouts and the related functionality needs by modifying the internal functionality using PCM600.

3.7.2 Functions

Table 28: Functions included in the REF615 standard configuration

Software Configuration				E
Function	IEC 61850	ANSI C37.2-2008	IEC 60617	EA
Protection				
Three-phase non-directional overcurrent protection, low stage, instance 1	PHLPTOC1	51P-1	3I> (1)	● ●
Three-phase non-directional overcurrent protection, low stage, instance 2	PHLPTOC2	51P-2	3I> (2)	●
Three-phase non-directional overcurrent protection, high stage, instance 1	PHHPTOC1	50P-1	3I>> (1)	●
Three-phase non-directional overcurrent protection, high stage, instance 2	PHHPTOC2	50P-2	3I>> (2)	●
Three-phase non-directional overcurrent protection, high stage, instance 3	PHHPTOC3	50P-4	3I>> (3)	●
Three-phase non-directional overcurrent protection, high stage, instance 4	PHHPTOC4	50P-5	3I>> (4)	●
Non-directional ground-fault protection, low stage, instance 1	EFLPTOC1	51G	Io> (1)	●
Non-directional ground-fault protection, low stage, instance 2	EFLPTOC2	51N-1	Io> (2)	●
Non-directional ground-fault protection, low stage, instance 3	EFLPTOC3	51N-2	Io> (3)	●
Non-directional ground-fault protection, high stage, instance 1	EFHPTOC1	50G-1	Io>> (1)	●
Non-directional ground-fault protection, high stage, instance 3	EFHPTOC3	50N-1	Io>> (3)	●
Non-directional ground-fault protection, high stage, instance 4	EFHPTOC4	50N-2	Io>> (4)	●
Non-directional ground-fault protection, high stage, instance 5	EFHPTOC5	50N-4	Io>> (5)	●
Non-directional ground-fault protection, high stage, instance 6	EFHPTOC6	50N-5	Io>> (6)	●
Three phase directional power protection, instance 1	DPSRDIR1	32P-1	I1-> (1)	●
Three phase directional power protection, instance 2	DPSRDIR2	32P-2	I1-> (2)	●
Ground directional power protection, instance 1	DNZSRDIR1	32N-1	I2 ->, Io-> (1)	● 1,3)
Ground directional power protection, instance 2	DNZSRDIR2	32N-2	I2 ->, Io-> (2)	● 1,3)
Negative-sequence overcurrent protection, instance 1	NSPTOC1	46-1	I2> (1)	●
Negative-sequence overcurrent protection, instance 2	NSPTOC2	46-2	I2> (2)	●
Residual overvoltage protection, instance 2	ROVPTOV2	59N-1	Uo> (2)	● 4)
Residual overvoltage protection, instance 3	ROVPTOV3	59N-2	Uo> (3)	● 4)

Software Configuration				E
Function	IEC 61850	ANSI C37.2-2008	IEC 60617	EA
Three-phase undervoltage protection, instance 1	PHPTUV1	27-1	3U< (1)	•
Three-phase undervoltage protection, instance 2	PHPTUV2	27-2	3U< (2)	•
Three-phase overvoltage protection, instance 1	PHPTOV1	59-1	3U> (1)	•
Three-phase overvoltage protection, instance 2	PHPTOV2	59-2	3U> (2)	•
Negative-sequence overvoltage protection, instance 1	NSPTOV1	47-1	U2> (1)	•
Negative-sequence overvoltage protection, instance 2	NSPTOV2	47-2	U2> (2)	•
Voltage per hertz protection, instance 1	OEPVPH1	24	U/f> (1)	•
Three-phase thermal protection for feeders, cables and distribution transformers, Instance 1	T1PTTR1	49F-1	3Ith>F (1)	•
Three-phase thermal protection for feeders, cables and distribution transformers, Instance 2	T1PTTR2	49F-2	3Ith>F (2)	•
Circuit breaker failure protection, instance 1	CCBRBRF1	50BF-1	3I>/Io>BF (1)	• 2)
Circuit breaker failure protection, instance 2	CCBRBRF2	50BF-2	3I>/Io>BF (2)	• 2)
Three-phase inrush detector, instance 1	INRPHAR1	INR-1	3I2f> (1)	•
Three-phase inrush detector, instance 2	INRPHAR2	INR-2	3I2f> (2)	•
Master trip, instance 1	TRPPTRC1	86/94-1	Master Trip (1)	•
Master trip, instance 2	TRPPTRC2	86/94-2	Master Trip (2)	•
Arc protection, instance 1	ARCSARC1	AFD-1	ARC (1)	•
Arc protection, instance 2	ARCSARC2	AFD-2	ARC (2)	•
Arc protection, instance 3	ARCSARC3	AFD-3	ARC (3)	•
Loss of phase, instance 1	PHPTUC1	37-1	3I< (1)	•
Loss of phase, instance 2	PHPTUC2	37-2	3I< (2)	•
Control				
Circuit-breaker control, instance 1	CBXCBR1	52-1	I <-> O CB (1)	•
Circuit-breaker control, instance 2	CBXCBR2	52-2	I <-> O CB (2)	•
Condition Monitoring				
Circuit-breaker condition monitoring, instance 1	SSCBR1	52CM-1	CBCM (1)	•
Circuit-breaker condition monitoring, instance 2	SSCBR2	52CM-2	CBCM (2)	•
Trip circuit supervision, instance 1	TCSSCBR1	TCM-1	TCS (1)	•
Trip circuit supervision, instance 2	TCSSCBR2	TCM-2	TCS (2)	•
Fuse failure supervision, instance 1	SEQRFUF1	60-1	FUSEF (1)	•

Software Configuration				E
Function	IEC 61850	ANSI C37.2-2008	IEC 60617	EA
Fuse failure supervision, instance 2	SEQRFUF2	60-2	FUSEF (2)	•
Measurement				
Three-phase current measurement, instance 1	CMMXU1	IA, IB, IC	3I	•
Three-phase current measurement, instance 2	CMMXU2	IA, IB, IC (2)	3I(B)	•
Sequence current measurement, instance 1	CSMSQI1	I1, I2, I0	I1, I2, I0	•
Sequence current measurement, instance 2	CSMSQI2	I1, I2, I0 (2)	I1, I2, I0(B)	•
Residual current measurement, instance 1	RESCMMXU1	IG	Io	•
Three-phase voltage measurement, instance 1	VMMXU1	VA, VB, VC	3U	•
Three-phase voltage measurement, instance 2	VMMXU2	VA, VB, VC (2)	3U(B)	•
Sequence voltage measurement, instance 1	VSMSQI1	V1, V2, V0	U1, U2, U0	•
Sequence voltage measurement, instance 2	VSMSQI2	V1, V2, V0 (2)	U1, U2, U0(B)	•
Single-phase power and energy measurement, instance 1	SPEMMXU1	SP, SE-1	SP, SE	•
Single-phase power and energy measurement, instance 2	SPEMMXU2	SP, SE-2	SP, SE(B)	•
Three-phase power and energy measurement, instance 1	PEMMXU1	P, E-1	P, E	•
Three-phase power and energy measurement, instance 2	PEMMXU2	P, E-2	P, E(B)	•
Current total demand distortion, instance 1	CMHAI1	PQI-1	PQM3I	•
Current total demand distortion, instance 2	CMHAI2	PQI-2	PQM3I(B)	•
Voltage total harmonic distortion, instance 1	VMHAI1	PQVPH-1	PQM3U	•
Voltage total harmonic distortion, instance 2	VMHAI2	PQVPH-2	PQM3U(B)	•
Voltage variation, instance 1	PHQVVR1	PQSS-1	PQ 3U<>	•
Voltage variation, instance 2	PHQVVR2	PQSS-2	PQ 3U<>(B)	•
Frequency measurement, instance 1	FMMXU1	f	f	•
Other functions				
Minimum pulse timer (2 pcs), instance 1	TPGAPC1	TP 1	TP (1)	•
Minimum pulse timer (2 pcs), instance 2	TPGAPC2	TP 2	TP (2)	•
Minimum pulse timer (2 pcs), instance 3	TPGAPC3	TP 3	TP (3)	•
Minimum pulse timer (2 pcs), instance 4	TPGAPC4	TP 4	TP (4)	•
Minimum pulse timer (2 pcs, second resolution), instance 1	TPSGAPC1	62CLD-1	TPS (1)	•
Minimum pulse timer (2 pcs, second resolution), instance 2	TPSGAPC2	62CLD-3	TPS (2)	•

Software Configuration				E
Function	IEC 61850	ANSI C37.2-2008	IEC 60617	EA
Minimum pulse timer (2 pcs, minute resolution), instance 1	TPMGAPC1	62CLD-2	TPM (1)	•
Minimum pulse timer (2 pcs, minute resolution), instance 2	TPMGAPC2	62CLD-4	TPM (2)	•
Pulse timer (8 pcs), instance 1	PTGAPC1	PT-1	PT (1)	•
Pulse timer (8 pcs), instance 2	PTGAPC2	PT-2	PT (2)	•
Time delay off (8 pcs), instance 1	TOFGAPC1	TOF-1	TOF (1)	•
Time delay off (8 pcs), instance 2	TOFGAPC2	TOF-2	TOF (2)	•
Time delay on (8 pcs), instance 1	TONGAPC1	TON -1	TON (1)	•
Time delay on (8 pcs), instance 2	TONGAPC2	TON -2	TON (2)	•
Set reset (8 pcs), instance 1	SRGAPC1	SR-1	SR (1)	•
Set reset (8 pcs), instance 2	SRGAPC2	SR-2	SR (2)	•
Move (8 pcs), instance 1	MVGAPC1	MV-1	MV (1)	•
Move (8 pcs), instance 2	MVGAPC2	MV-2	MV (2)	•
Logging functions				
Disturbance recorder	RDRE1	DFR	-	•
Fault recorder	FLMSTA1	FR	-	•
Sequence event recorder	SER	SER	-	•

1) Io selectable by parameter, I2 as default
2) Calculated neutral current is always used
3) Vo calculated and negative sequence voltage selectable by parameter, V2 as default
4) Vo calculated is always used

3.7.3 Default I/O connections

Table 29: Default connections for binary inputs

Binary input	Default usage	Connector pins
X110-BI1		X110-1,2
X110-BI2		X110-3,4
X110-BI3		X110-5,6
X110-BI4		X110-7,6
X110-BI5	Circuit Breaker 2 close status	X110-8,9
X110-BI6	Circuit Breaker 2 open status	X110-10,9
X110-BI7	Circuit Breaker 1 close status	X110-11,12
X110-BI8	Circuit Breaker 1 open status	X110-13,12
X130-BI1		X130-1,2
X130-BI2		X130-3,4
X130-BI3		X130-5,6

Table 30: Default connections for binary outputs

Binary output	Default usage	Connector pins
X100-PO1	Close circuit breaker (1)	X100 – 6,7
X100-PO2	Close circuit breaker (2)	X100 – 8,9
X100-SO1	Breaker failure backup trip(1) and (2) to upstream breaker	
X100-SO2		
X100-PO3	Open circuit breaker(1) / Breaker Trip (1)	X100 – 15,16,17,18,19
X100-PO4	Open circuit breaker(2) / Breaker Trip (2)	X100 – 20,21,22,23,24
X110-SO1		X110-14,15,16
X110-SO2		X110-17,18,19
X110-SO3		X110-20,21,22
X110-SO4		X110-23,24
X110-HSO1	Open circuit breaker(1) / Breaker Trip (1)	X110 – 15,16
X110-HSO2	Open circuit breaker(2) / Breaker Trip (2)	X110 – 19,20
X110-HSO3	Trip from ARC-3 protection	X110 – 23,24

Table 31: Default connections for LEDs

LED	LED label
LED 1	Phase A
LED 2	Phase B
LED 3	Phase C
LED 4	Neutral / Ground
LED 5	Time
LED 6	Instantaneous
LED 7	Breaker 1 Failure/Alarm
LED 8	Breaker 2 Failure/Alarm
LED 9	Overload Alarm/Trip
LED 10	Arc Flash Detection
LED 11	Voltage

3.7.4 Typical connection diagrams

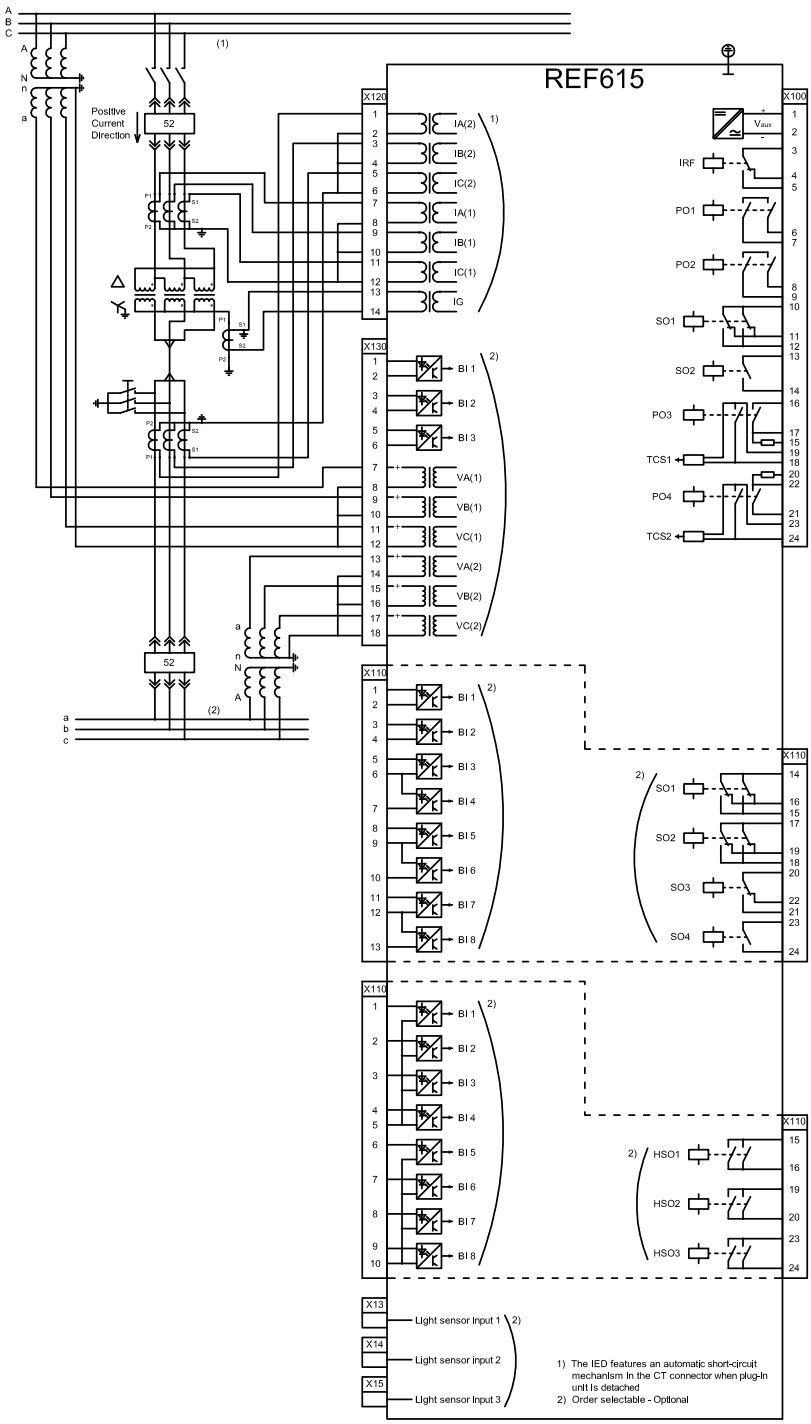

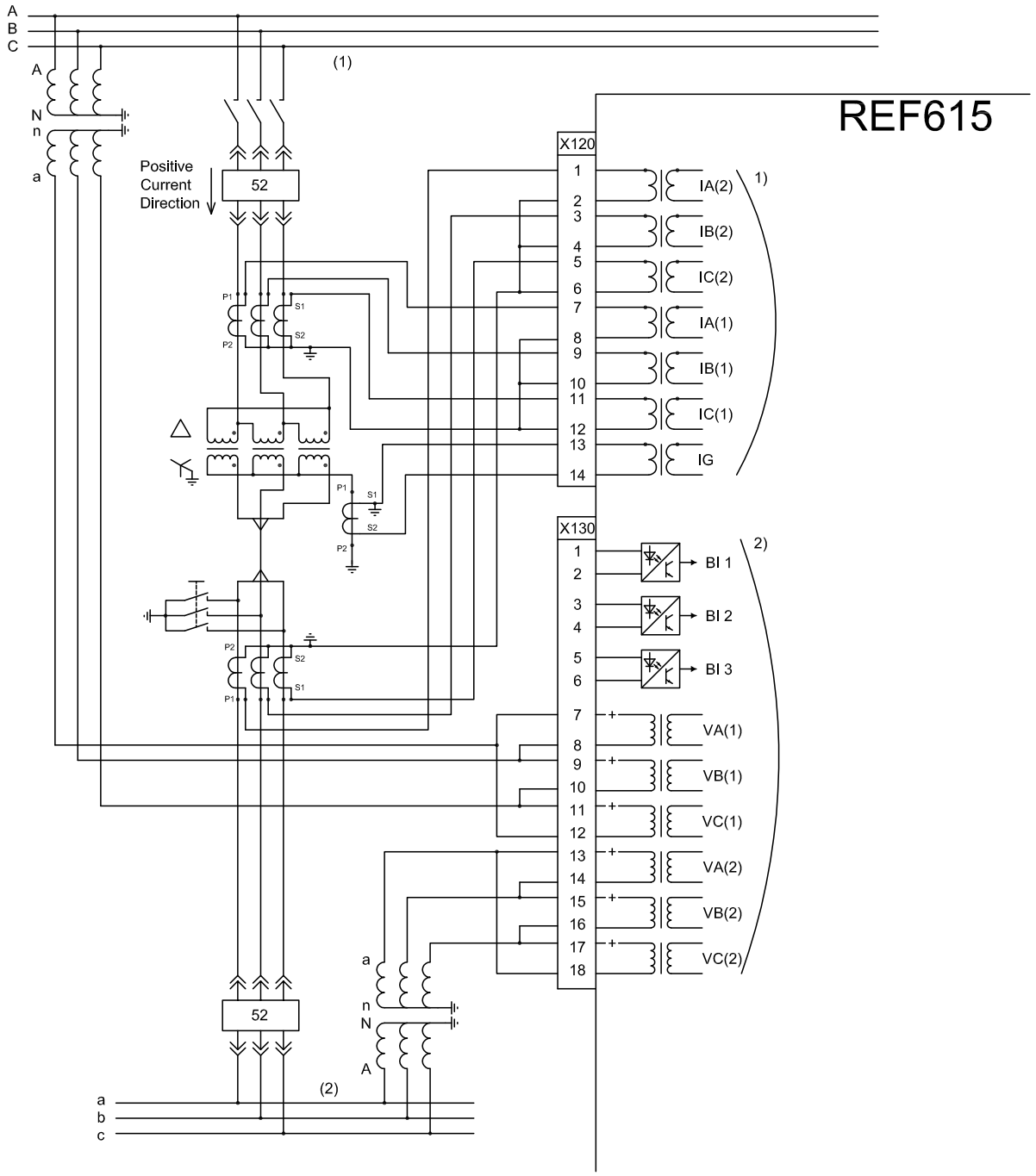
A
B
C
(1)
A
N
n
a
Positive
Current
Direction
52
P1
S1
P2
S2
REF615
X120
1
2
3
4
5
6
7
8
9
10
11
12
13
14
IA(2)
IB(2)
IC(2)
IA(1)
IB(1)
IC(1)
IG
1)
X130
BI 1
BI 2
BI 3
VA(1)
VB(1)
VC(1)
VA(2)
VB(2)
VC(2)
2)
52
a
n
N
A
(2)
a
b
c

3.7.5 Functional diagrams

The functional diagrams describe the default input, output, alarm LED and function-to-function connections. The default connections can be viewed with and changed with PCM 600 according to the application requirements, if necessary.

The analog channels, measurements from CTs, have fixed connections to the different function blocks inside the IED's standard configuration.

The signal marked with IA, IB and IC represents the three phase currents. The signal IG represents the measured ground current.

The signal marked with VA, VB and VC represents the three phase voltages. The signal VG represents the measured ground voltage.

The signal marked with (1) and (2) represents the voltage levels e.g. in transformer application or in the dual feeder system it represents the name of the feeder.

REF615 offers six different settings group which the user can set based on individual needs. Each group can then, be activated/ deactivated by using the setting group settings available in REF615.

3.7.6 Functional diagrams for protection

The functional diagrams describe the IED's protection functionality in detail and according to the factory set default connections.

Three stages of three-phase overcurrent protection (51P-1, 50P-1 and 50P-2) functions are provided for overcurrent and short-circuit protection of feeder (1) and respectively (51P-2, 50P-4 and 50P-5) functions for feeder (2). The non directional high stage (50P-1) or (50P-4) will be blocked by cold load detection logic according to the feeder to be protected. The cold load detection logic starts from closing of the corresponding feeder circuit breaker and is active during set time. The cold load detection logic´s active time can be set in a resolution of minutes or seconds to the functions TPSGAPC and TPMGAPC.

The inrush detection block's (INR-1) output BLK2H offers the possibility to either block the function or multiply the active settings for any of the shown protection function blocks.

Preselected trip signals are connected to the Breaker Trip of the corresponding feeder and also to the alarm LEDs. Alarm LEDs 1, 2 and 3 are used for phase segregated information of current based faults. The alarm LED5 is used to indicate time delayed trips and the alarm LED6 instantaneous trips of the current based protection functions.

The pickup information of all overcurrent functions is collected to the variable OC_PICKUP_ALARM and connected to the disturbance recorder. This signal can be mapped to the signal outputs depending on the application needs.

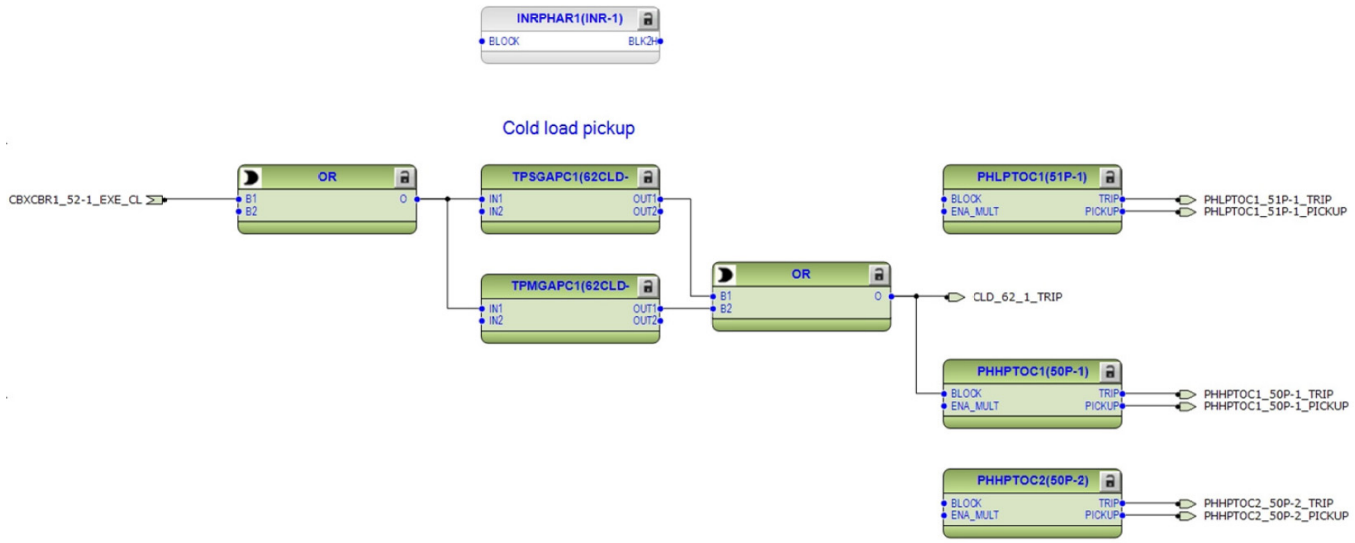

Figure 120: Three phase overcurrent protection and cold load detection for feeder (1)

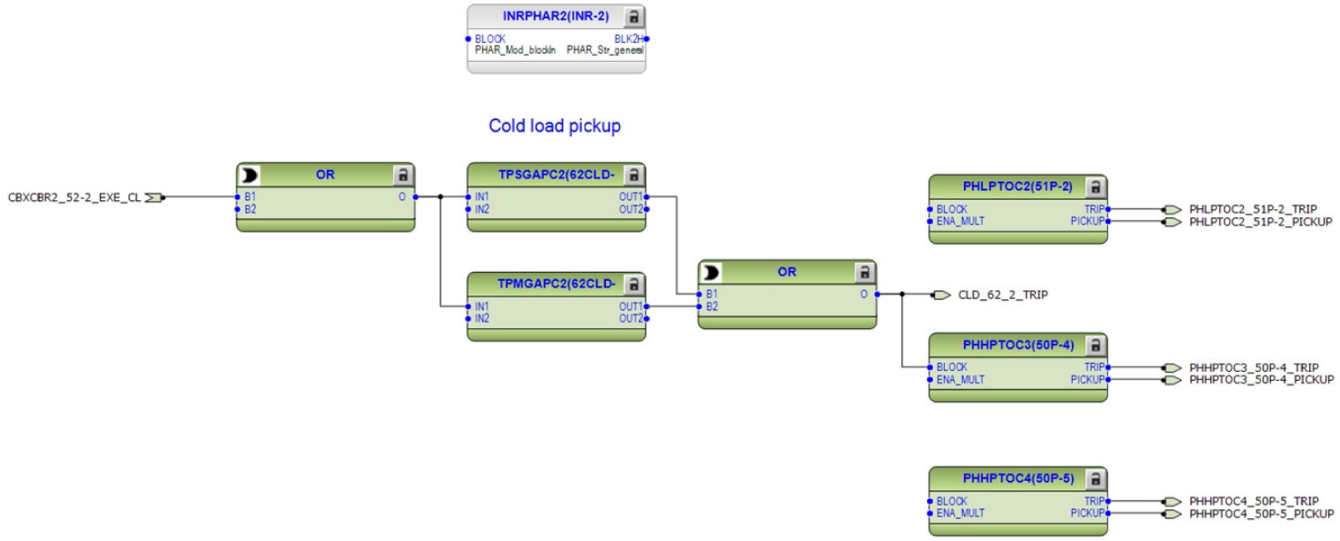

Figure 121: Three phase overcurrent protection and cold load detection for feeder (2)

The undercurrent protection functions (37-1 and 37-2) are offered for protection against loss of phase situations. The trip signal is connected to the disturbance recorder only by default.

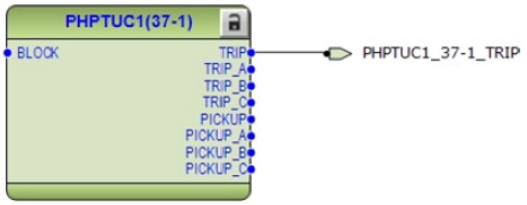

Figure 122: Undercurrent protection for feeder (1)

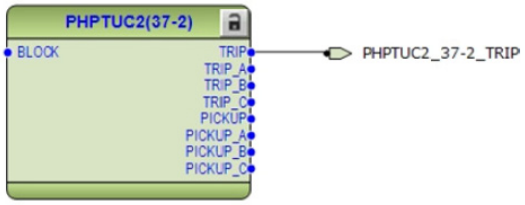

Figure 123: Undercurrent protection for feeder (2)

Three stages are provided to non-directional neutral overcurrent protection. The neutral overcurrent protection uses calculated residual current component. Functions 51N-1, 50N-1 and 50N-2 are intended for the protection of the feeder (1) and functions 51N-2, 50N-4 and 50N-5 for the protection of the feeder (2)

The operation of 51N-1, 51N-2, 50N-2 and 51N-5 will not be blocked as a default. The 50N-1 and 50N-4 will be blocked if the corresponding cold load detection logic is activated. The operation of neutral overcurrent protection functions is connected to alarm LED 4.

The alarm LED5 is used to indicate time delayed trips and the alarm LED6 instantaneous trips of the current based protection functions.

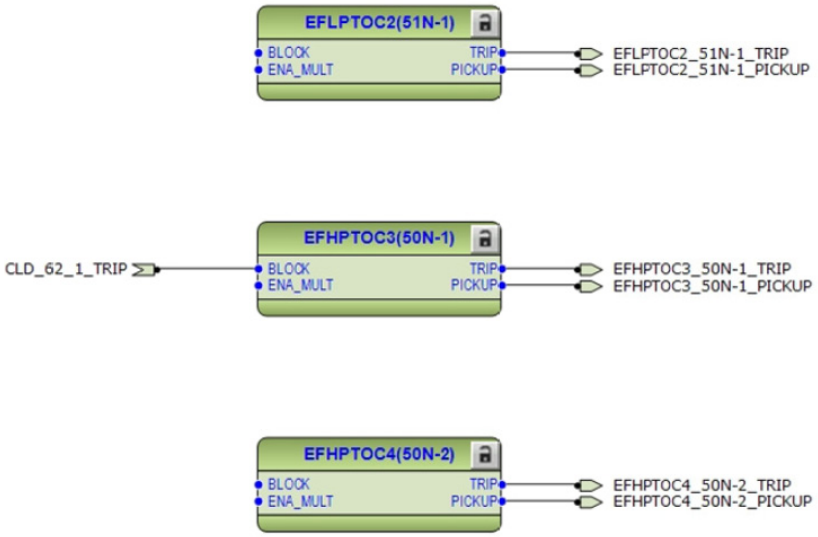

Figure 124: *Non-directional neutral overcurrent protection for feeder (1)*

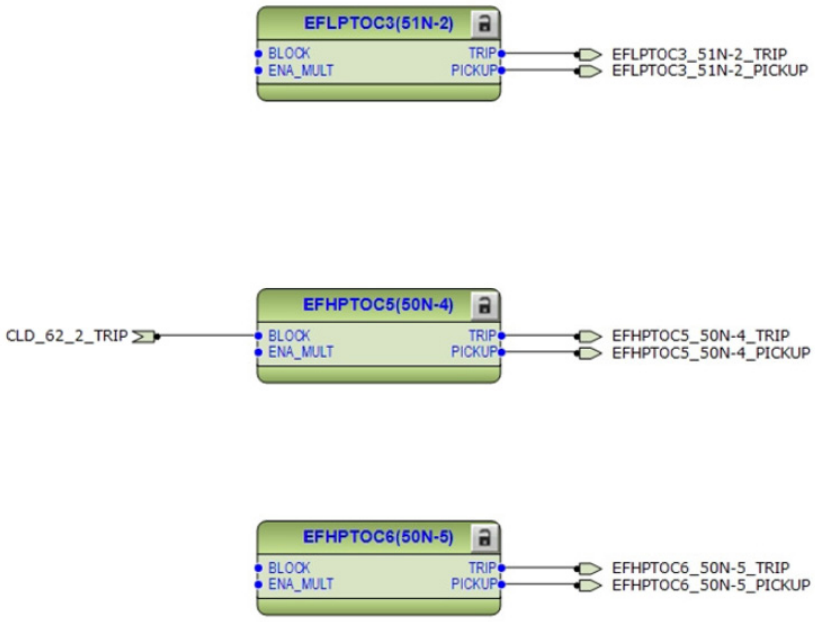

Figure 125: *Non-directional neutral overcurrent protection for feeder (2)*

Two non-directional ground-fault protection (51G and 50G-1) stages are provided to detect phase to-ground faults that may be a result of, for example, insulation ageing or sudden failure of insulation.

The operation of 51G is not blocked as default by any functionality. However the operation of the 50G-1 is blocked by the cold load detection of the sides (1) or (2). The operation of ground-fault protection functions is connected to alarm LED 4.

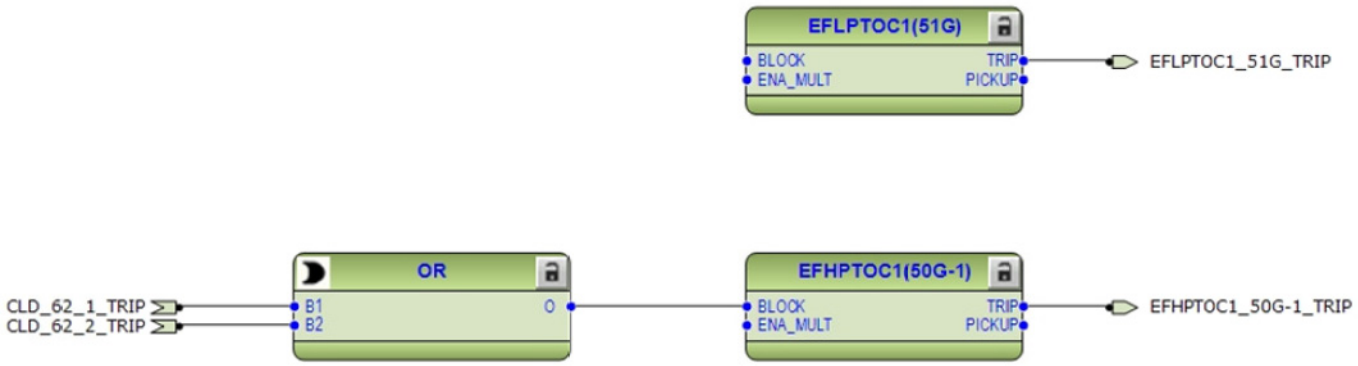

Figure 126: Non-directional ground fault protection

Negative-sequence overcurrent protection (46-1 and 46-2) stages are provided for phase unbalance protection. These functions are used to protect the feeders against phase unbalance caused by, for example, a broken conductor.

The operation of 46-1 and 46-2 are not blocked as default by any functionality. The operation of these protection functions is connected to alarm LED 5.

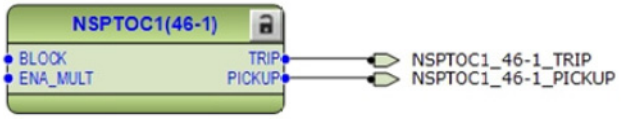

Figure 127: Negative sequence protection for feeder (1)

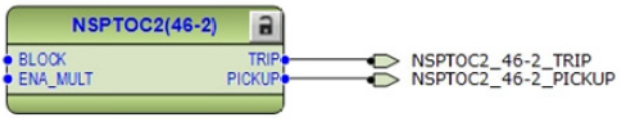

Figure 128: Negative sequence protection for feeder (2)

The directional positive sequence over power protection (32P-1 and 32P-2) and directional negative sequence over power protection (32N-1 and 32N-2) are offered in configuration. The instance number 1 is used for protection of the feeder (1) and the instance number 2 for the feeder (2). The output information of these functions can be used e.g. releasing or blocking purposes but by the default those are not connected. Directional power protection functions are blocked by default configuration connection if fuse failure is detected.

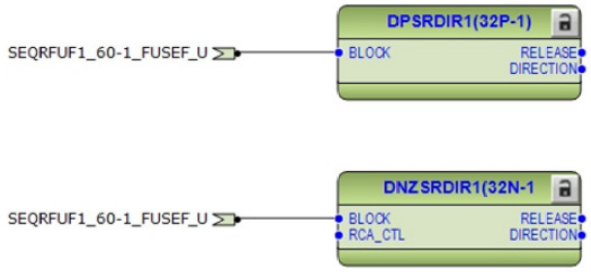

Figure 129: *Directional power protection for the feeder (1)*

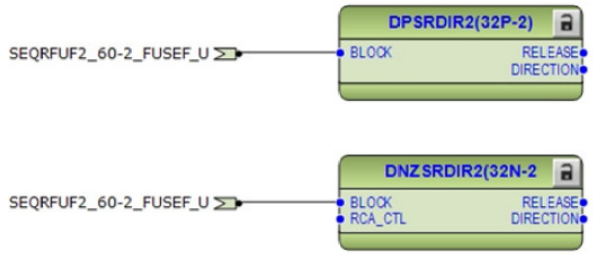

Figure 130: *Directional power protection for the feeder (2)*

The overvoltage and undervoltage protection stages (27-1 and 59-1) offer protection against abnormal phase voltage conditions. The operation of voltage functions is connected to alarm LED11. A failure in the voltage measuring circuit is detected by the fuse failure function and the activation is connected to undervoltage protection functions to avoid faulty undervoltage tripping.

Negative-sequence overvoltage (47-1) protection function enables voltage-based unbalance protection. The operation signals of voltage-sequence functions are connected to alarm LED11, which is a combined voltage protection alarm LED.

The residual overvoltage protection (59N-1) provides ground-fault protection by detecting abnormal level of residual voltage. It can be used, for example, as a nonselective backup protection for the selective directional ground-fault functionality. The operation signal is connected to alarm LED11.

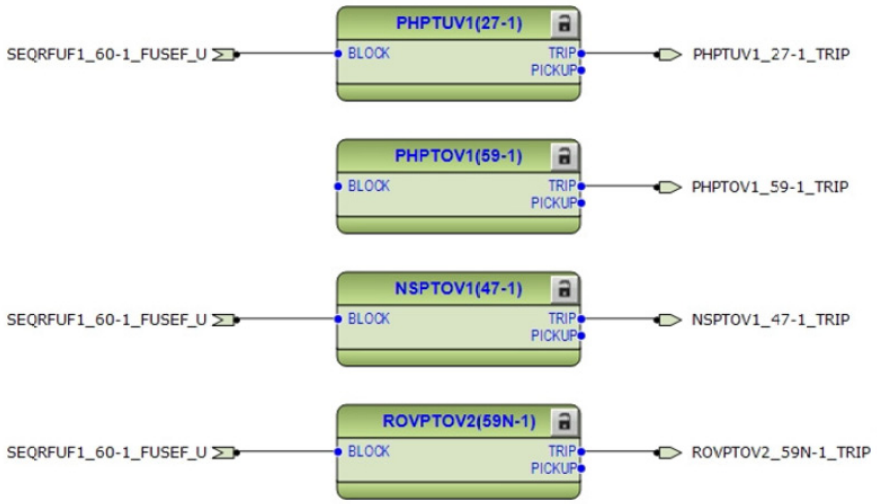

Figure 131: Voltage protection functions for feeder (1)

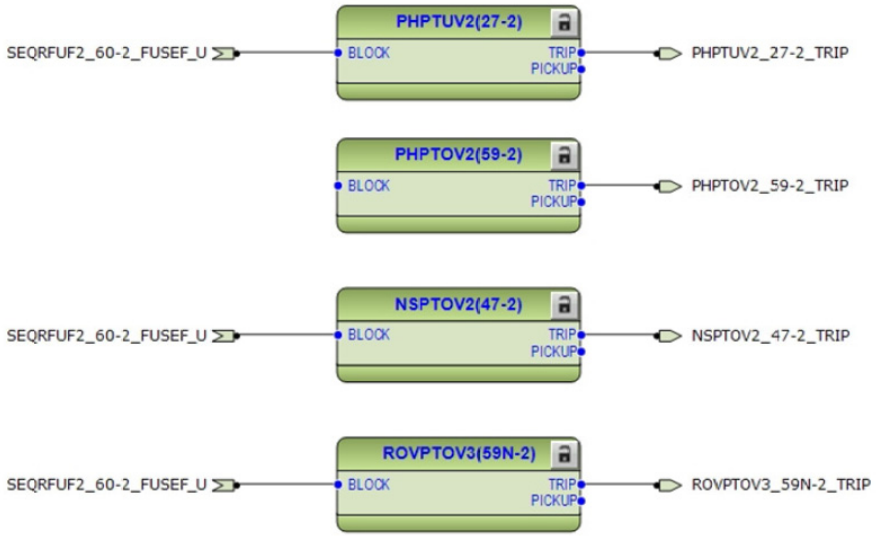

Figure 132: Voltage protection functions for feeder (2)

All overcurrent pickup signals are merged together as variable OC_PICKUP_ALARM(1) and (2) according to the protected feeder. These alarms are by default connected to disturbance recorder channel. Those can be mapped also e.g. for alarming or blocking purposes to the binary output relays.

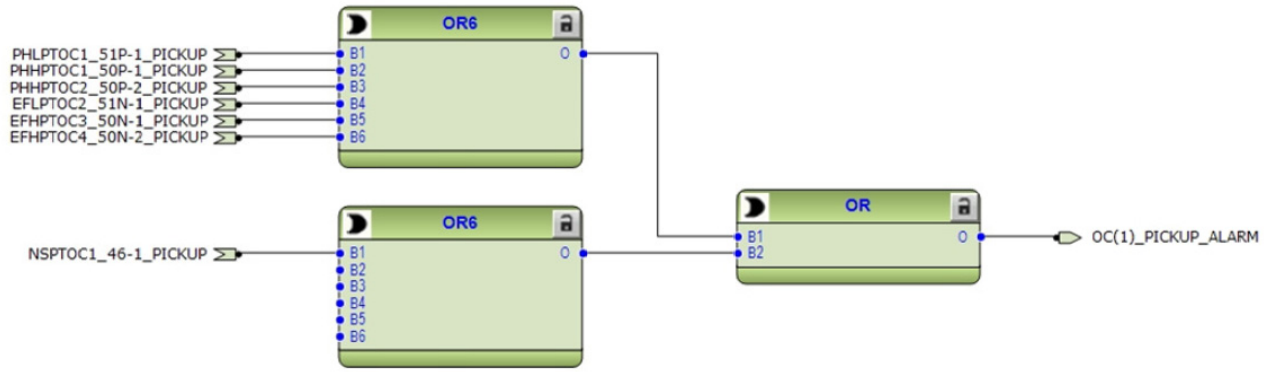

Figure 133: Overcurrent pickup alarm for feeder (1)

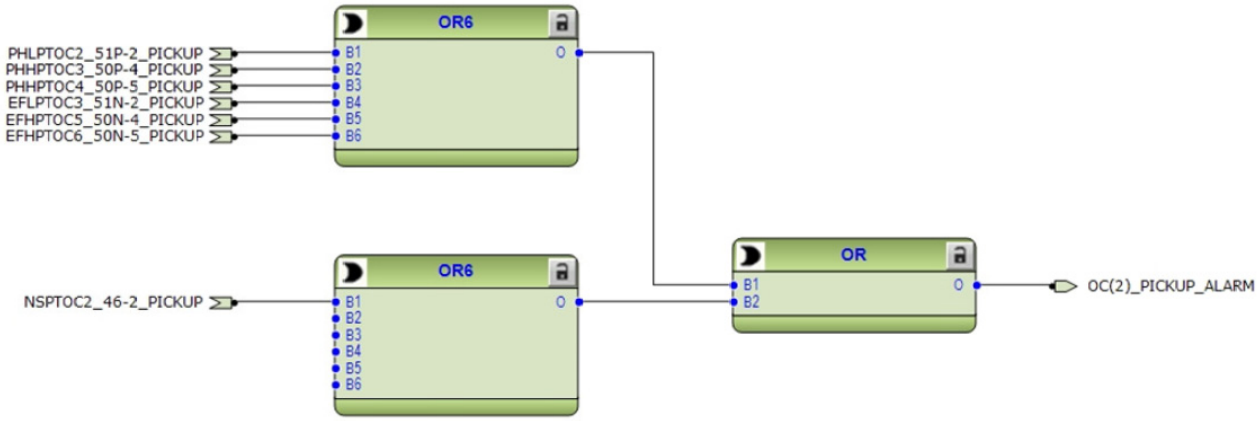

Figure 134: Overcurrent pickup alarm for feeder (2)

The thermal overload protection functions (49F-1) and (49F-2) detects short and long term overloads under varying load conditions.

The trip of the thermal overload protection functions are connected to the Breaker Trip1 and 2 according to the protected feeder. The alarm and trip signals are connected to alarm LED 9.

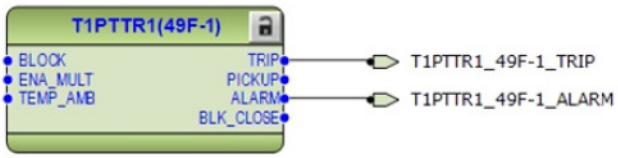

Figure 135: Thermal overload protection for feeder (1)

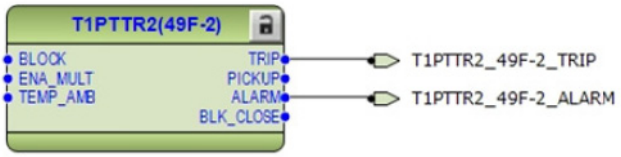

Figure 136: Thermal overload protection for feeder (2)

The over excitation protection function (24) is offered according to the order code. By the default the TRIP output is connected only to alarm LED11.

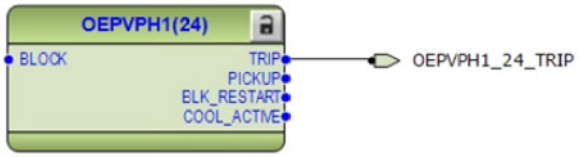

Figure 137: Over excitation protection

Two instances of the circuit breaker failure protection are offered as per protected feeder. The circuit-breaker failure protection (50BF) is initiated via the PICKUP input by a number of different protection functions in the IED. 50BF offers different operating modes associated with the circuit-breaker position and the measured phase and residual currents.

50BF has two operating outputs: TRRET and TRBU. The TRBU output is used to give a backup trip to the circuit breaker feeding upstream. For this purpose, the TRBU operate output signal is connected to the output SO1 (X100: 10-12)

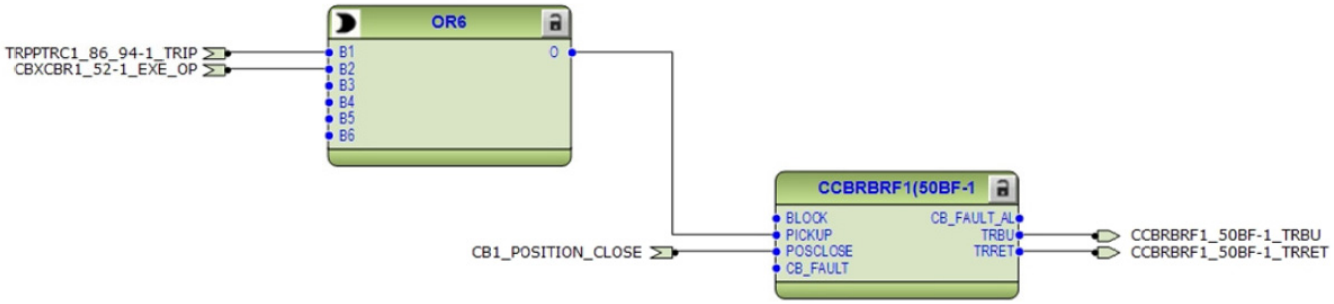

Figure 138: Circuit breaker failure protection for feeder (1)

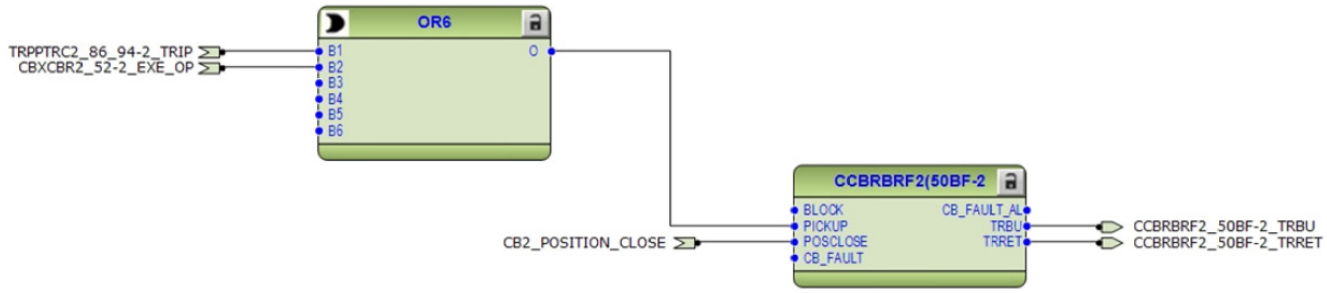

Figure 139: Circuit breaker failure protection for feeder (2)

The TRRET operate output can be used for retripping its own circuit breaker through the Breaker Trip again.

Three arc protection (AFD-1, AFD-2 and AFD-3) stages are included as an optional function. The arc protection offers individual function blocks for three ARC sensors that can be connected to the IED. Each arc protection function block has two different operation modes, with or without the phase and residual current check.

Trip signal from AFD-1 is connected to Breaker trip 1, available at PO3 (X100: 15-19). Whereas the trip signal from AFD-2 is connected to Breaker trip 2, available at PO4 (X100: 20-24). The fault detection of these protection functions is connected to alarm LED 10.

If the IED has been ordered with high speed binary outputs, then trip signal from AFD-1 and AFD-2 are connected to high speed output HSO1 (X110:15-16) and HSO2(X110:19-20) respectively and AFD-3 is connected directly to high speed output HSO3 (X110:23-24).

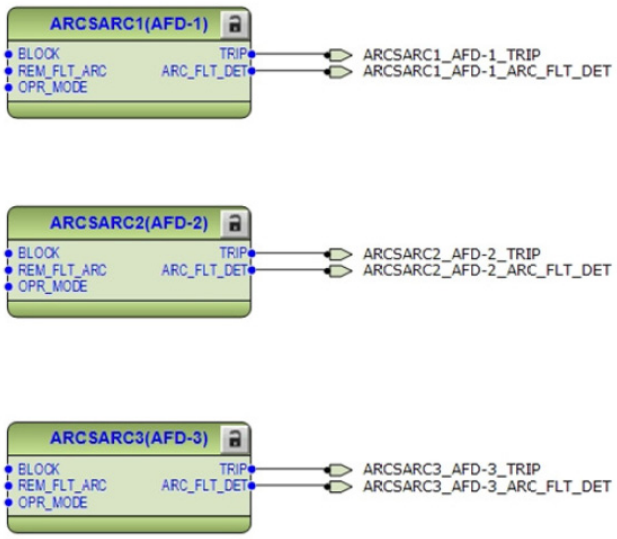

Figure 140: Arc protection

Two master trip logics (86/94-1 and 86/94-2) are provided as a merging unit of trip commands. The (86/94-1) collects the trip signals from 46-1, 49F-1, 50P-1, 50P-2, 50N-1, 50N-2, 50G-1, 51P-1, 51N-1, 51G and AFD-1 protection functions and is connected to trip output contact PO3 (X100:16-19) and also to high speed output HS01 (X110:15-16) for IEDs ordered with high speed binary output cards.

Open control commands to the circuit breaker from the local or remote is also connected directly to the output PO3 (X100:16-19) from circuit breaker control (52) function block.

The (86/94-2) collects the trip signals from 46-2, 49F-2, 50P-4, 50P-5, 50N-4, 50N-5, 50G-1, 51P-2, 51N-2, 51G and AFD-2 protection functions and is connected to trip output contact PO4 (X100:20-24) and also to high speed output HS02 (X110:19-20) for IEDs ordered with high speed binary output cards.

The (86/94-1) and the (86/94-2) provides the lockout/latching function, event generation and the trip signal duration setting. If the lockout operation mode is selected, one binary input can be reassigned to the RST_LKOUT input of the Master Trip to enable external reset with a push button.

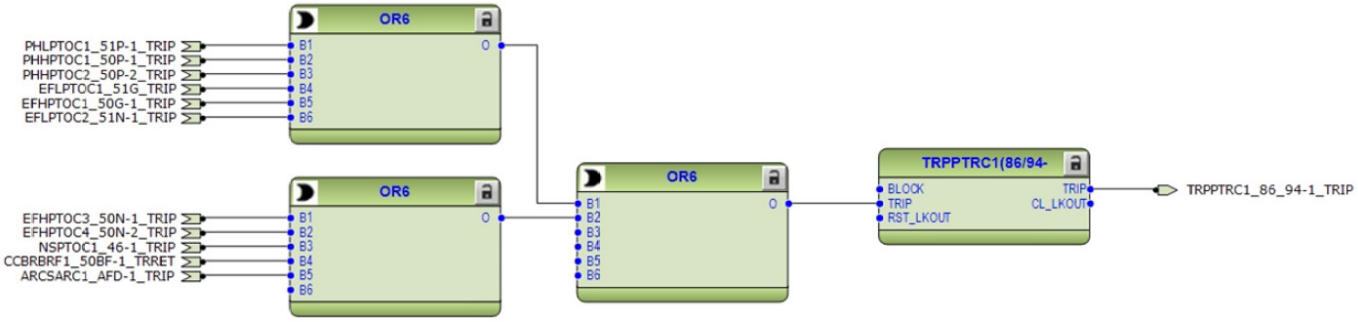

Figure 141: Trip logic for breaker 1

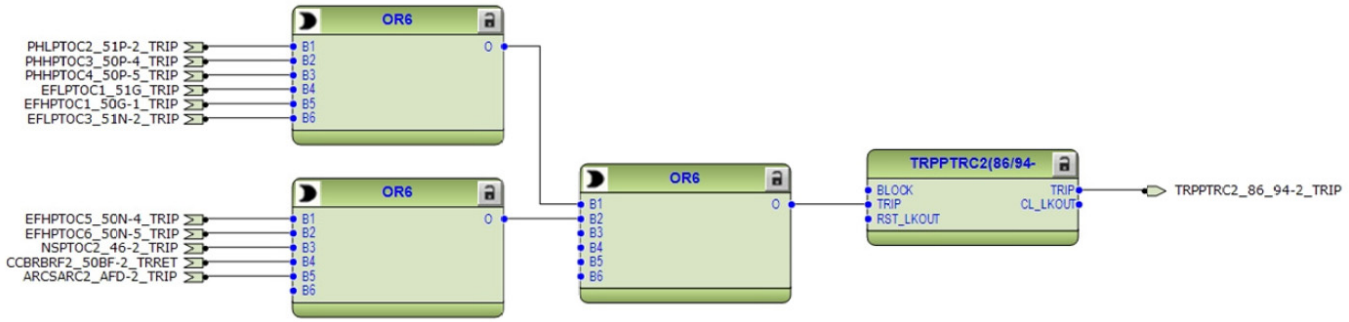

Figure 142: *Trip logic for breaker 2*

3.7.7 Functional diagrams for control functions

The circuit breaker closing is enabled when the ENA_CLOSE input is activated. The input can be activated by the configuration logic, which is e.g. a combination of the disconnector or breaker truck and ground switch position status and the status of the Breaker Trip logic and gas pressure alarm and circuit-breaker spring charging. With the present configuration, the activation of ENA_CLOSE input is configured using only Breaker Trip logic 86/94-1 or 86/94-2 according to the breaker of the feeder to be operated. By this way the circuit breaker cannot be closed in case the trip is active.

The ITL_BYPASS input can be used, for example, to always enable the closing of the circuit breaker when the circuit breaker truck is in the test position, despite of the interlocking conditions being active when the circuit breaker truck is closed in service position.

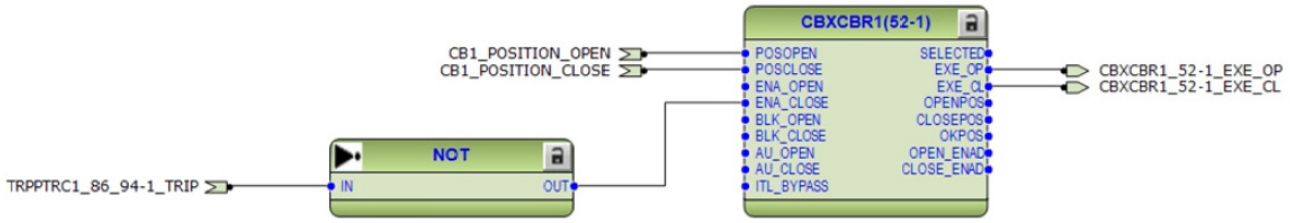

Figure 143: *Circuit breaker (1) control*

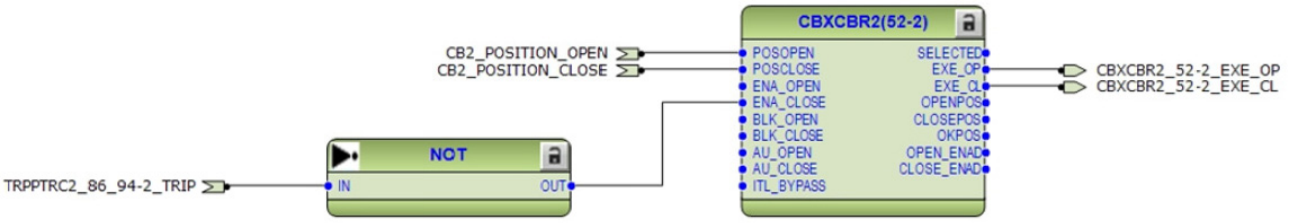

Figure 144: Circuit breaker (2) control

If the ENA_CLOSE and BLK_CLOSE signals are completely removed from the breaker control function block 52 with PCM600, the function assumes that the breaker close commands are allowed continuously.

3.7.8 Functional diagrams for condition monitoring

Two trip circuit monitoring (TCM-1 and TCM-2) stages are provided to supervise the trip circuit of the circuit breaker connected at PO3 (X100:15-19) and PO4 (X100:20-24).

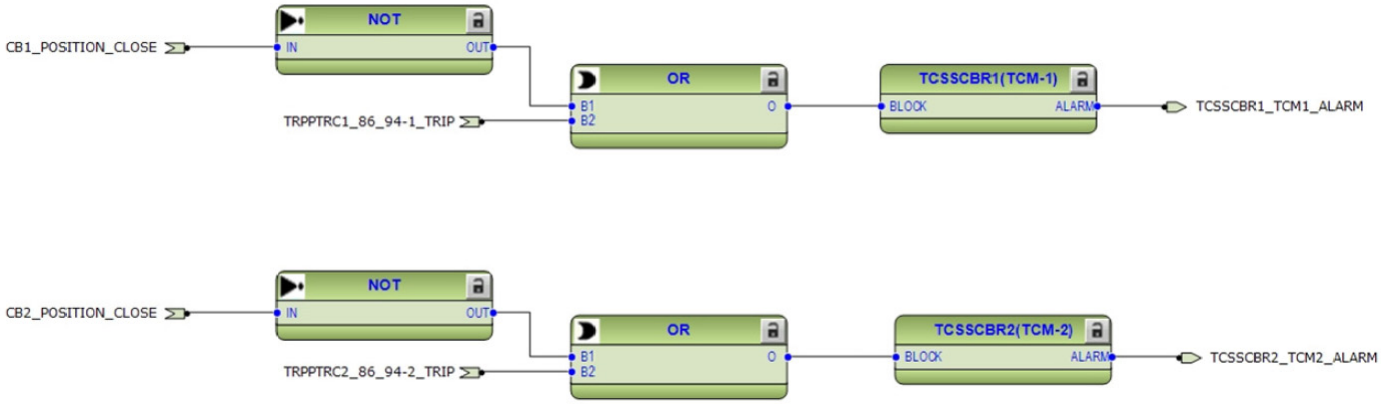

Figure 145: Trip circuit monitoring

The TCM-1 function is blocked by 86/94-1 and the circuit-breaker open position signal. The TCM-2 function is blocked respectively by 86/94-2 and the circuit-breaker open position signal.

By default it is expected that there is no external resistor in the circuit breaker tripping/closing coil circuit connected parallel with circuit breaker normally open/closed auxiliary contact.

The fuse failure supervision (60-1 and 60-2) detects failures in voltage measurement circuits. Failures, such as an open miniature circuit breaker, are detected and the alarm is connected to the few voltage based protection functions to avoid misoperation

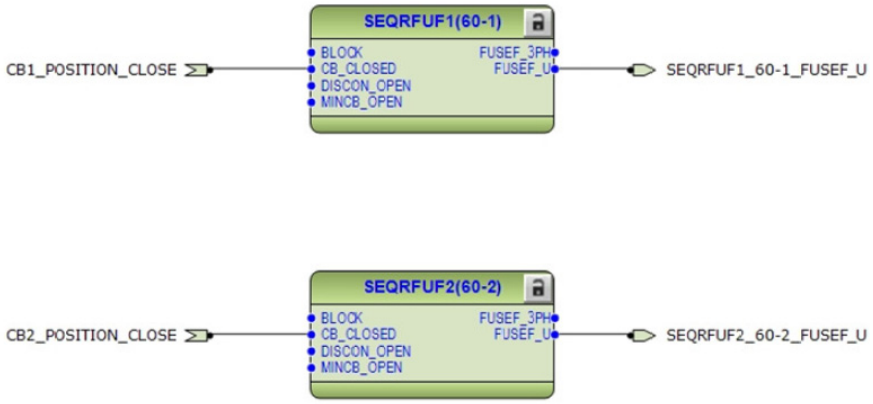

Figure 146: Fuse failure monitoring

The circuit breaker condition monitoring functions (52CM-1 and 52CM-2) supervises the circuit breaker status based on the binary input information connected and measured current levels. The function introduces various supervision alarms. The 52CM-1 is intended for the circuit breaker of the feeder (1) and the 52CM-2 is respectively for circuit breaker of the feeder (2). Collective alarm outputs of the functions are connected to alarm LED7.

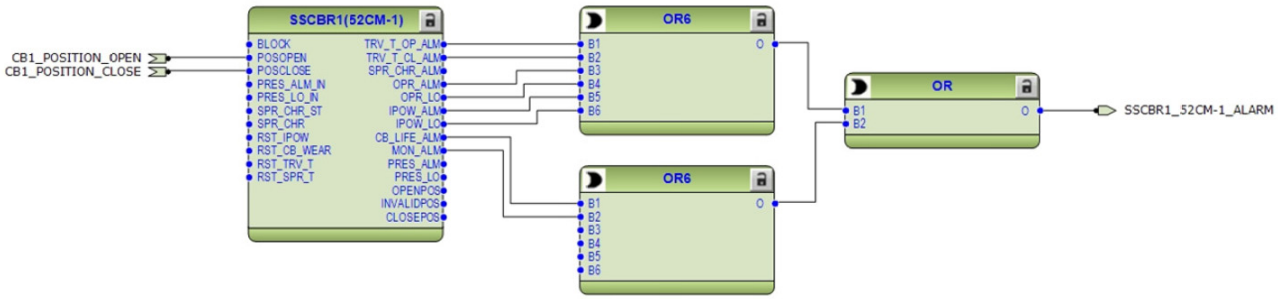

Figure 147: Circuit breaker (1) condition monitoring

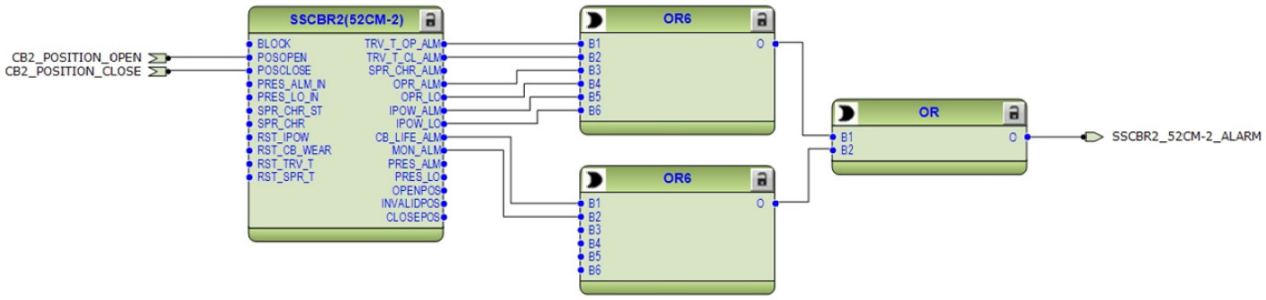

Figure 148: *Circuit breaker (2) condition monitoring*

3.7.9 Functional diagrams for Measurements

The phase current inputs to the IED are measured by three-phase current measurement (IA, IB, IC) function block respectively for both feeders (1) and (2). The current input is connected to the X120 card in the back panel. Similarly the sequence and residual current are measured by sequence current measurement (I1, I2, I0) and ground current measurement (IG) function blocks.

The measurements can be seen from the LHMI and is available using the measurement option in the menu selection. Based on the settings, IA, IB, IC and IG function blocks can generate low alarm/warning, high alarm/warning signals for the measured current values.

The power quality function (PQI-1) is used to measure the harmonic contents of the phase current. This functionality is included according to ordercode selection.

Figure 149: *Current measurements for feeder (1)*

Figure 150: *Current measurements for feeder (2)*

Figure 151: *Frequency measurement*

3.7.10 Functional diagrams for other functions

Configuration also includes other miscellaneous basic functions which are not configured, but can be used for creating general purpose logics. These functions include:

- Four instance of Minimum Pulse Timer TP-1, TP-2, TP-3 and TP-4,
- Two instance of Pulse Timer PT-1 and PT-2,
- Two instance of Time delay off TOF-1 and TOF-2,
- Two instance of Time delay on TON-1 and TON-2,
- Two instance of Set reset logic SR-1 and SR-2 and
- Two instance of Move logic MV-1 and MV-2

3.7.11 Functional diagrams for logging functions

The disturbance recorder DFR consists of 64 channels. However as default few channel are connected to trigger the digital fault recorder are as shown in Figure 152. More connection can be made as per individual need. Also when disturbance recorder is trigger the analog values available at the analog inputs are recorded by fault recorder FR

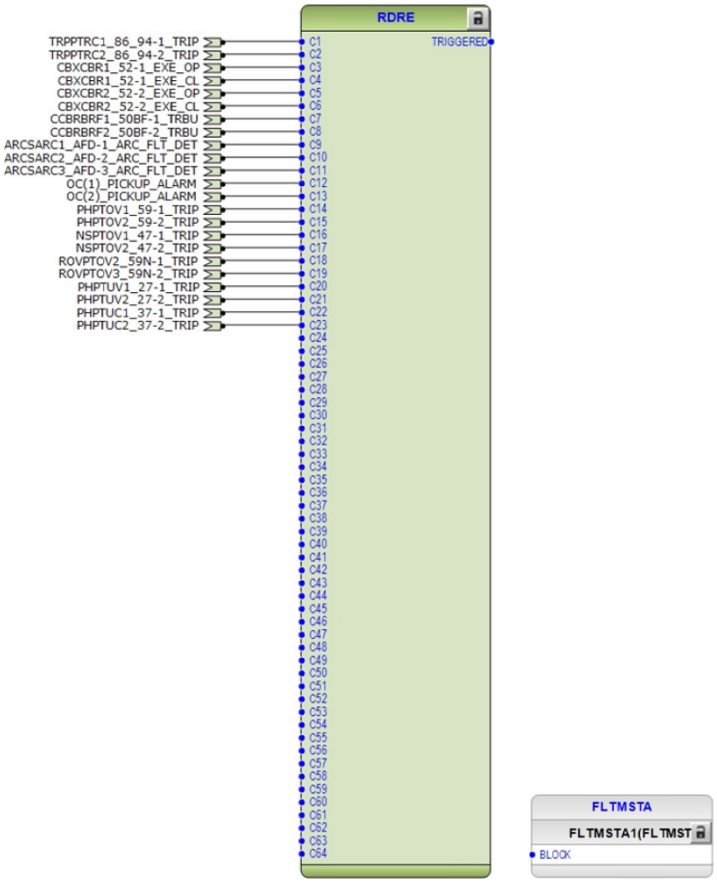

Figure 152: 64 channel Disturbance and fault recorder

3.7.12 Functional diagrams for I/O and Alarm LEDs

The default binary I/O connected in the configuration and Alarm LEDs are indicated in Figure 153 to Figure 156.

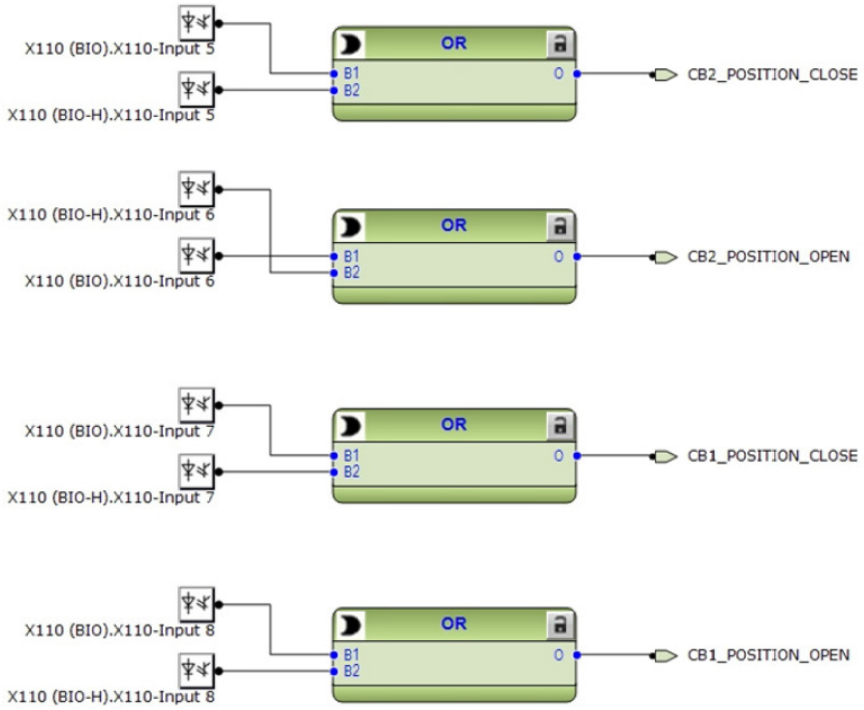

Figure 153: Binary inputs

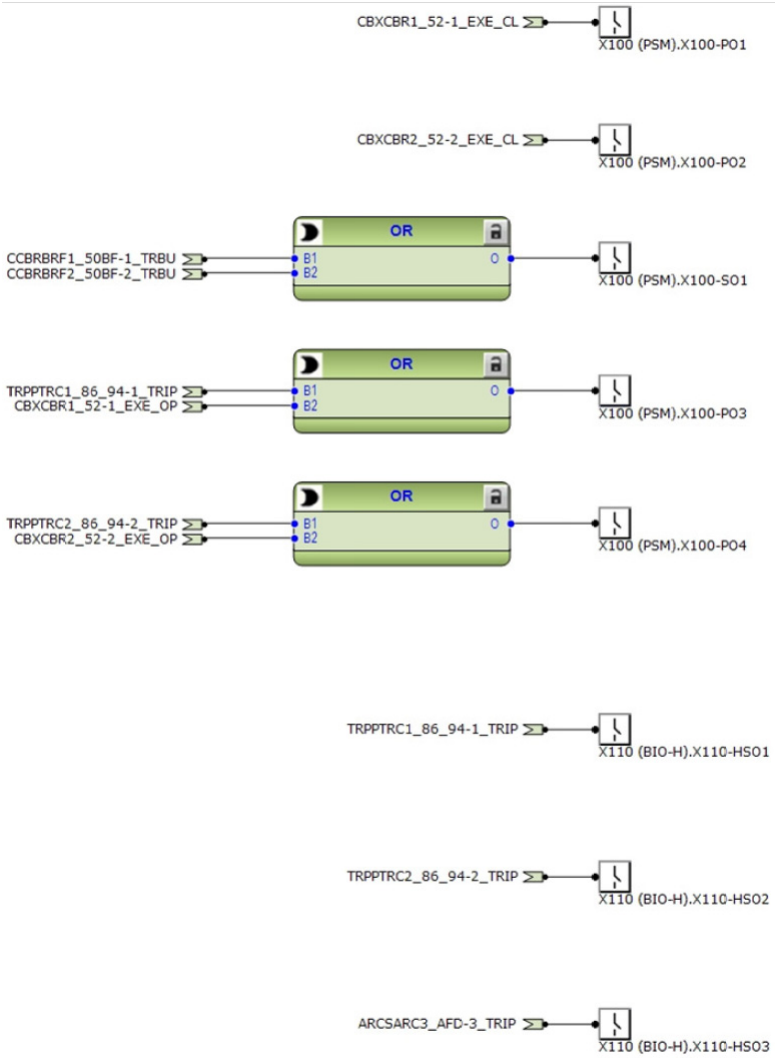

Figure 154: Binary outputs

High speed binary outputs (HSO) are available only if IED with High speed binary card has been ordered.

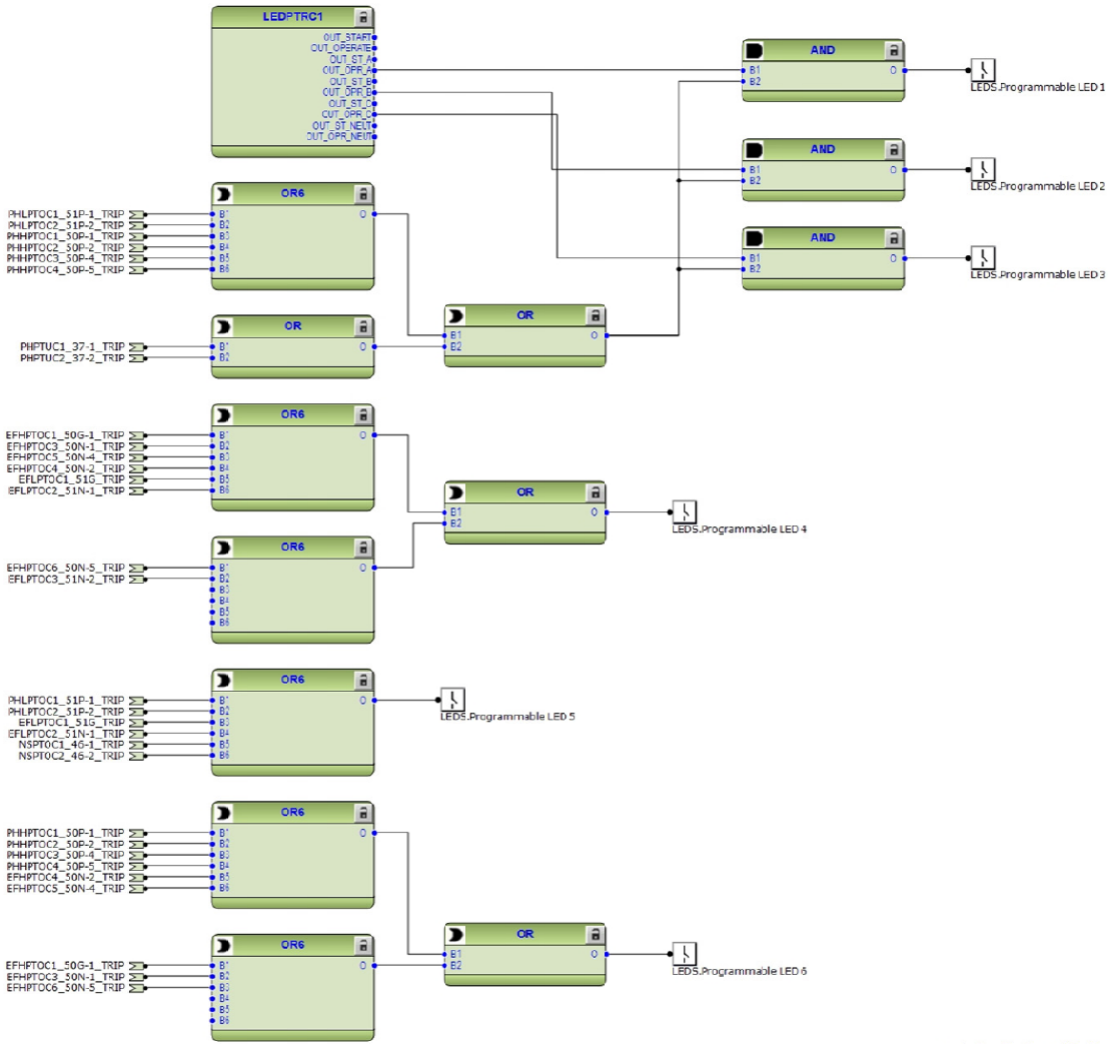

Figure 155: *Alarm LEDs 1 – 6*

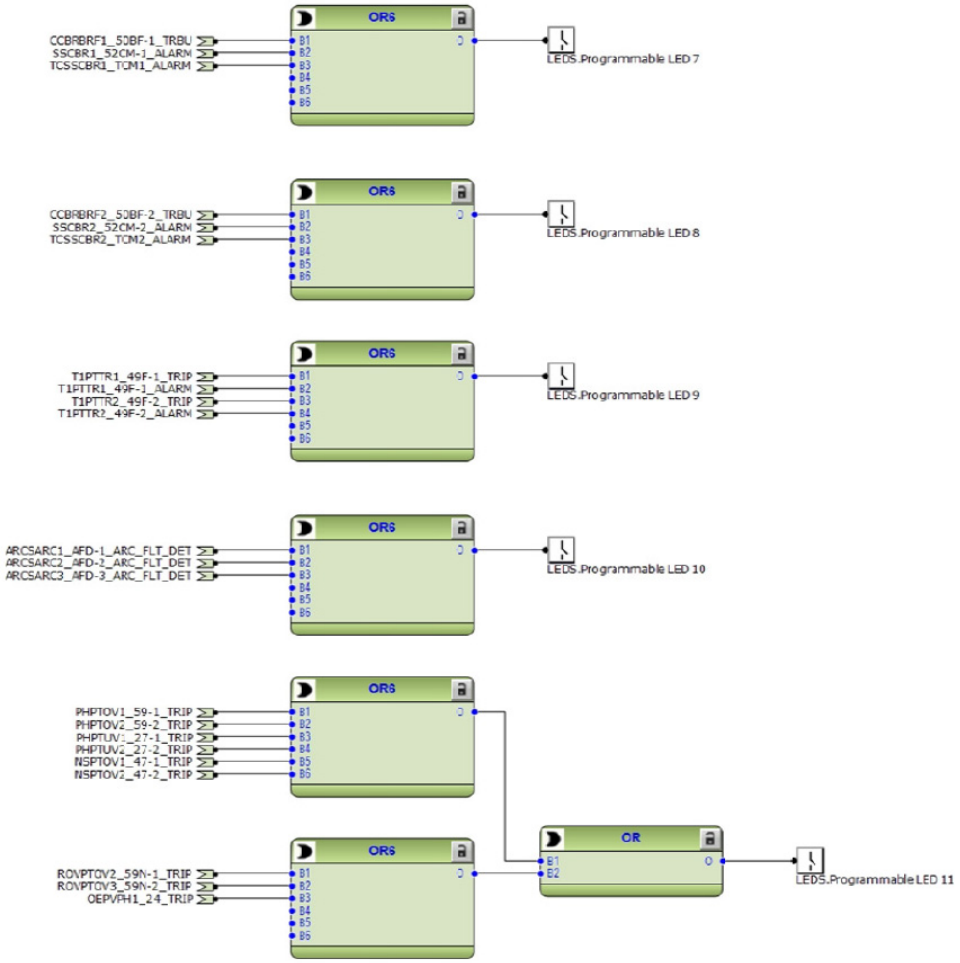

Figure 156: *Alarm LEDs 7 – 11*

Section 4 IED physical connections

4.1 Inputs

4.1.1 Auxiliary supply voltage input

The auxiliary voltage of the IED is connected to terminals X100/1-2. At DC supply, the positive lead is connected to terminal X100-1. The permitted auxiliary voltage range is marked on the LHMI of the IED on the top of the HMI of the plug-in unit.

Table 32: Auxiliary voltage supply

Terminal	Description
X100-1	+ Input
X100-2	- Input

4.1.2 Binary inputs

The binary inputs can be used, for example, to generate a blocking signal, to unlatch output contacts, to trigger the digital fault recorder or for remote control of IED settings.

Terminals X120/1-6 are binary input terminals. An additional BIO module can be included in slot 110.

Table 33: Binary input terminals X110-1...13 included in configurations FA01 and FA02

Terminal	Description
X110-1 X110-2	BI1, + BI1, -
X110-3 X110-4	BI2, + BI2, -
X110-5 X110-6	BI3, + BI3, -
X110-6 X110-7	BI4, - BI4, +
X110-8 X110-9	BI5, + BI5, -
X110-9 X110-10	BI6, - BI6, +
X110-11 X110-12	BI7, + BI7, -
X110-12 X110-13	BI8, - BI8, +

Table 34: Binary input terminals X120-1...6

Terminal	Description
X120-1 X120-2	BI1, + BI1, -
X120-3 X120-2	BI2, + BI2, -
X120-4 X120-2	BI3, + BI3, -
X120-5 X120-6	BI4, + BI4, -

Table 35: Binary input terminals X130-1...9, optional configuration FA01

Terminal	Description
X130-1 X130-2	BI1, + BI1, -
X130-2 X130-3	BI2, - BI2, +
X130-4 X130-5	BI3, + BI3, -
X130-5 X130-6	BI4, - BI4, +
X130-7 X130-8	BI5, + BI5, -
X130-8 X130-9	BI6, - BI6, +

4.1.3 Optional light sensor inputs

If the IED is provided with the optional communication module with light sensor inputs, the pre-manufactured lens-sensor fibers are connected to inputs X13, X14, and X15, see the connection diagrams. For further information, see arc flash detector.

The IED is provided with connection sockets X13, X14 and X15 only if the optional communication module with light sensor inputs has been installed. If the arc flash detector option is selected when ordering an IED, the light sensor inputs are included in the communication module.

Table 36: Light sensor input connectors

Terminal	Description
X13	Input Light sensor 1
X14	Input Light sensor 2
X15	Input Light sensor 3

4.2 Outputs

4.2.1 Outputs for tripping and controlling

Output contacts PO1, PO2, PO3 and PO4 are heavy-duty trip contacts capable of controlling most circuit breakers. On delivery from the factory, the trip signals from all the protection stages are routed to PO3 and PO4.

Table 37: Output contacts

Terminal	Description
X100-6	PO1, NO
X100-7	PO1, NO
X100-8	PO2, NO
X100-9	PO2, NO
X100-15	PO3, NO (TCM resistor)
X100-16	PO3, NO
X100-17	PO3, NO
X100-18	PO3 (TCM1 input), NO
X100-19	PO3 (TCM1 input), NO
X100-20	PO4, NO (TCM resistor)
X100-21	PO4, NO
X100-22	PO4, NO
X100-23	PO4 (TCM2 input), NO
X100-24	PO4 (TCM2 input), NO

4.2.2 Outputs for signalling

Output contacts SO1 and SO2 in slot X100 or SO1, SO2, SO3 and SO4 in slot X110 or SO1, SO2 and SO3 in slot X130 (optional) can be used for signalling on pickup and tripping of the IED. On delivery from the factory, the pickup and alarm signals from all the protection stages are routed to signalling outputs.

Output contacts of slot X110 are optional. Output contacts of slot X130 are available in the optional BIO module (BIOB02A).

Table 38: Output contacts X100-10...14

Terminal	Description
X100-10	SO1, common
X100-11	SO1, NC
X100-12	SO1, NO
X100-13	SO2, NO
X100-14	SO2, NO

Table 39: Output contacts X110-14...24

Terminal	Description
X110-14	SO1, common
X110-15	SO1, NO
X110-16	SO1, NC
X110-17	SO2, common
X110-18	SO2, NO
X110-19	SO2, NC
X110-20	SO3, common
X110-21	SO3, NO
X110-22	SO3, NC
X110-23	SO4, common
X110-24	SO4, NO

Table 40: Output contacts X130-10...18

Terminal	Description
X130-10	SO1, common
X130-11	SO1, NO
X130-12	SO1, NC
X130-13	SO2, common
X130-14	SO2, NO
X130-15	SO2, NC
X130-16	SO3, common
X130-17	SO3, NO
X130-18	SO3, NC

4.2.3 IRF

The IRF contact functions as an output contact for the self-supervision system of the protection IED. Under normal operating conditions, the IED is energized and the contact is closed (X100/3-5). When a fault is detected by the self-supervision system or the auxiliary voltage is disconnected, the output contact drops off and the contact closes (X100/3-4).

Table 41: IRF contact

Terminal	Description
X100-3	IRF, common
X100-4	Closed; IRF, or V_{aux} disconnected
X100-5	Closed; no IRF, and V_{aux} connected

Section 5 Glossary

100BASE-FX	A physical media defined in the IEEE 802.3 Ethernet standard for local area networks (LANs) that uses fibre-optic cabling
100BASE-TX	A physical media defined in the IEEE 802.3 Ethernet standard for local area networks (LANs) that uses twisted-pair cabling category 5 or higher with RJ-45 connectors
ANSI	American National Standards Institute
BI	Binary input
BI/O	Binary input/output
BO	Binary output
CB	Circuit breaker
CT	Current transformer
DFR	Digital fault recorder
DNP3	A distributed network protocol originally developed by Westronic. The DNP3 Users Group has the ownership of the protocol and assumes responsibility for its evolution.
EMC	Electromagnetic compatibility
GOOSE	Generic Object Oriented Substation Event
HMI	Human-machine interface
HW	Hardware
IEC 61850	International standard for substation communication and modelling
IED	Intelligent electronic device
IP address	A set of four numbers between 0 and 255, separated by periods. Each server connected to the Internet is assigned a unique IP address that specifies the location for the TCP/IP protocol.
IRIG-B	Inter-Range Instrumentation Group's time code format B
LAN	Local area network
LC	Connector type for glass fiber cable
LCD	Liquid crystal display
LED	Light-emitting diode
LHMI	Local human-machine interface

Modbus	A serial communication protocol developed by the Modicon company in 1979. Originally used for communication in PLCs and RTU devices.
MV	Medium voltage
PCM600	Protection and Control IED Manager
PO	Power output
RJ-45	Galvanic connector type
RS-232	Serial interface standard
RS-485	Serial link according to EIA standard RS485
SO	Signal output
TCP/IP	Transmission Control Protocol/Internet Protocol
TCS	Trip-circuit supervision
WAN	Wide area network
WHMI	Web human-machine interface

Contact us

ABB Inc.
Distribution Automation
4300 Coral Ridge Drive
Coral Springs, FL 33065, USA
Phone:+1 (800) 523-2620
Phone:+1 954-752-6700
Fax:+1 954 345-5329
www.abb.com/substationautomation

Power and productivity
for a better world™