3AC ENGINEERING

Introduction to Protection Basics

BRENT L. CARPER, P.E.
Principal Engineer

Presented at the
35th Annual Hands-On Relay School
March 12-16, 2017

Agenda

- HRS schedule and logistics
- Tips for a great week
- Introduction to system protection
- Fundamental concepts
- Applications
- Recap

3AC ENGINEERING

HRS Schedule and Logistics

Monday

Morning (8:00 – 12:00) **Todd Hall 116**

- Introduction Lecture Series
  Introduction to Protection
  Math for Technicians

Lunch (12:00 – 1:00)

Afternoon (1:00 – 3:00) **Sloan 175**

- Introduction Lecture Series
  Relay Coordination Principles
  Lessons Learned from the Field

Afternoon (3:10 – 5:00) **EME B54**

- ABB CO

Evening (5:00 +) **Birch & Barley**

Tuesday

Morning (7:30 – 12:00) **Todd Hall (various rooms)**

- Concurrent Open Lectures

  12 lectures available – Pick 4

Lunch (12:00 – 1:00)

Afternoon (1:00 – 5:00) **EME B54**

- ABB RC
- BE1-81O/U
- BE1-51

Evening (6:30 – 9:00)

- Supplier's Showcase

Wednesday

Morning (7:30 – 12:00) **EME B54**

- ABB HU

Lunch (12:00 – 1:00)

Afternoon (1:00 – 5:00) **EME B54**

- GE JBCG

Evening (6:00 – 9:00)

- Social and Banquet

Thursday

Morning (7:30 – 12:00) **EME B54**

- GE CEY51A

Lunch (12:00 – 1:00)

Afternoon (1:00 – 5:00) **EME B54**

- SEL-551

Evening

- Optional SEL manufacturing plant tour

Friday

Morning (7:30 – 10:30) **Todd Hall 116**

- Review the Week
- CCVT Transients
- Protection System Misoperations

3AC ENGINEERING

Tips for a Great Week

Tips

- Parking and speeding
- Be on time
- Watch out for the afternoon snacks
- Enjoy the evening events
- Plan around happy hour
- Embrace variety
- Talk to other people from other companies

3AC ENGINEERING

Introduction to System Protection

Intro to Power System Protection

- What: What are we protecting
- Why: Why do we need protection
- When: Speed, selectivity, dependability
- Where: The equipment used to perform protection
- How: Applying protective relaying

What

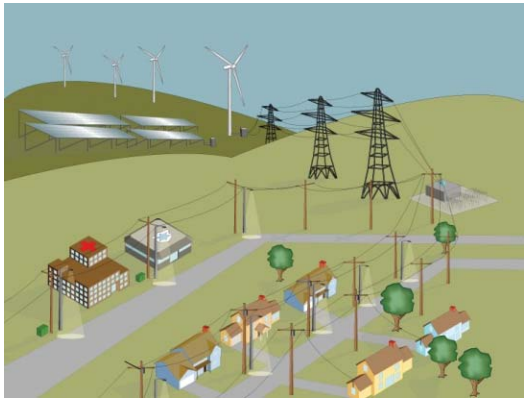

Why

Why

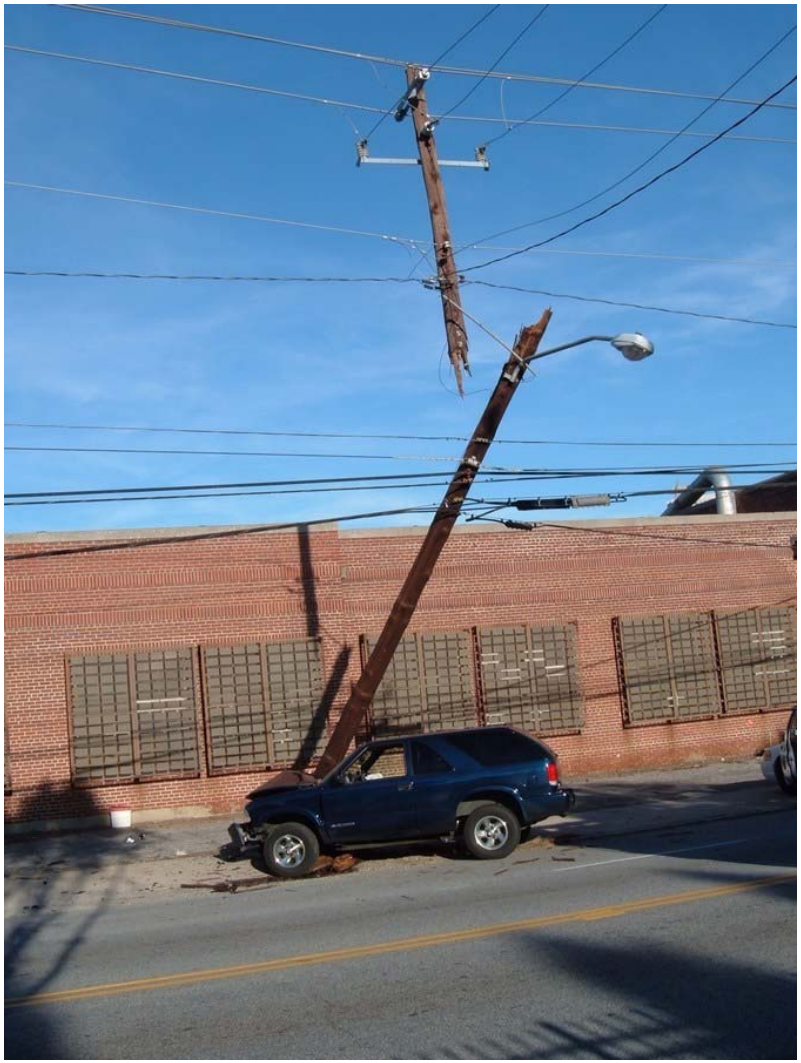

Why

Why

Why

When

- Speed, selectivity, dependability

- Protection must:
  - Detect an abnormal system condition
  - React quickly
  - Respond properly

- Not as easy as it sounds!
  - How do we “detect” something happening miles away?
  - How do we react quickly *enough*? Electricity is traveling at (almost) the speed of light.
  - How do we ensure that the response action is correct? An incorrect response could make the abnormal condition worse.

When

- Speed, selectivity, dependability

- Protection must:
  - Detect an abnormal system condition
  - React quickly
  - Respond properly

- In general:
  - “abnormal” means a Fault
  - “quickly” means Milliseconds
  - “properly” is accomplished by:
    - Engineering (relay application, coordination, redundancy and backup)
    - Testing, Commissioning, Maintenance, Verification, Event Analysis

Where

- The equipment used to perform protection

Where

- The equipment used to perform protection

Where

- The equipment used to perform protection

Where

Where

- Relays are just one component of the “Protection System”
  - Protective relays which respond to electrical quantities,
  - Communications systems necessary for correct operation of protective functions
  - Voltage and current sensing devices providing inputs to protective relays,
  - Station dc supply associated with protective functions (including station batteries, battery chargers, and non-battery-based dc supply), and
  - Control circuitry associated with protective functions through the trip coil(s) of the circuit breakers or other interrupting devices.

- ***The best Relay Techs (and engineers) have expertise on the entire “Protection System”, not just the relays!***

How

- Applying protective relaying

1. Engineering
   - Applications, zones of protection, fault studies, schematic design
   - Relay settings and logic

2. Construction and Commissioning
   - Testing the application (not the settings)
   - Calibration of E/M relays
   - Functional testing

3. Maintenance for Reliability
   - Periodic in-service load readings, relay I/O testing, E/M relay calibration, trip checks, breaker monitoring and maintenance, battery system maintenance
   - Event analysis
   - Managing changes, managing relay firmware, verifying settings
   - Cyber security

How

- How <u>NOT</u> to apply protective relaying…

Super Bowl XLVII (2013)

http://entergy-neworleans.com/content/superbowl/130202_Report.pdf

115kV line relay trip equation error

http://www.youtube.com/watch?v=kVXi_0H_ZzM

http://www.youtube.com/watch?v=gZtJ6Oxcb0o

How

- *The best Relay Techs (and engineers) have expertise on the entire "Protection System", not just the relays!*

- ***The best Relay Techs (and engineers) do not become famous, and do not end up on YouTube!***

3AC ENGINEERING

Fundamental Concepts

Fundamentals

- Relays measure Current or Voltage
  - Magnitude, Phase Angle, or Speed (frequency)
    - Relative to a threshold
    - Relative to another phase
    - Relative to another quantity
    - Rate of change

- Examples
  - Fuse reacts to _____
  - Overcurrent Relay reacts to _____
  - Ground (Residual) Overcurrent Relay reacts to _____
  - Distance Relay reacts to _____
  - Directional Overcurrent Relay reacts to _____
  - Sync Check Relay reacts to _____

Official Definitions

- Relay
  - "An electric device that is designed to respond to input conditions in a prescribed manner and, after specified conditions are met, to cause contact operation or similar abrupt change in associated electric control circuits. Inputs are usually electric, but may be mechanical, thermal, or other quantities or combinations of quantities. Limit switches and similar simple devices are not relays." (IEEE C37.90)

- Protective Relay
  - "A relay whose function is to detect defective lines or apparatus or other power system conditions of an abnormal or dangerous nature and to initiate appropriate control circuit action." (IEEE 100).

- Fuse
  - "An overcurrent protective device with a circuit-opening fusible part that is heated and severed by the passage of the overcurrent through it" (IEEE 100)

Practical Definitions

- In general…
  - Protective Relays respond to measurements of current and/or voltage of the power system, and have settings or adjustments.
  - Auxiliary Relays are used with Protective Relays to complete a protection and control scheme. Auxiliary relays respond to control system currents or voltages. They usually do not have adjustments or settings.
  - Other types of relays and devices may respond to things such as: Pressure, Temperature, Vibration, Light, Position, Liquid Level, Air/Oil Flow, etc. These relays/devices may perform important protective functions.

Protective Relays

Auxiliary Relays

Not Relays

Not Relays…

but important protective devices.

Relaying?

- Transformer Sudden Pressure Relay (Rapid Pressure Rise Relay) and associated Seal-In Relay
- Protective Relays? Auxiliary Relays?
  Traditionally this was a “gray area”… but not anymore!

Relay System

Relay System

- Relays are just one component of the “Protection System”
  - Relays
  - Circuit Breakers (or switches)
  - Input Sources (CTs, PTs, Sensors, I/O)
  - DC System (battery)
  - Interconnection (wiring , controls, integration)

- ***The best Relay Techs (and engineers) have expertise on the entire “Protection System”, not just the relays!***

Relay Construction

- Relay Types:
  - Electromechanical (E/M)
  - Solid State (Analog, Static)
  - Digital (Microprocessor, Numerical, IED, Computerized)

- Relay Construction:
  - Single-Function / Multi-Function
  - Single-Phase / Poly-Phase (multi-phase)
  - Drawout Case / Fixed
  - Rack Mount / Panel Mount
  - Projection Mount / Flush Mount / Semi-Flush Mount
  - Front Connected, Back Connected

Reliability

- Dependability = Trips every time
- Security = Never false trips

- Increase Dependability by:
  - Increasing sensitivity, increasing number of elements/relays used
  - Redundant relays, dual batteries, dual trip coils
  - Digital relay self monitoring
  - Maintenance, reviewing events

- Increase Security by:
  - Correct applications and good design engineering
  - Minimizing “features”, maintaining simplicity
  - Maintaining calibration (e/m and solid-state) and Firmware (digital)

- Utility Grade versus Industrial Grade

Reliability?

Relay Considerations

- Understand the pros and cons of:
  - E/M, Solid State, and Digital
  - Different relay types and designs

- Things to consider in relay application:
  - Life
  - Reliability
  - Redundancy/Backup
  - Simplicity in function
  - Power draw (on the battery)
  - Cost
  - Calibration/Maintenance
  - Speed
  - Accuracy
  - Flexibility
  - Burden (AC current/voltage inputs)
  - Information and data recording
  - Integration

ANSI Device Numbers – IEEE C37.2

- Hands-On Relay School Clipboard
- WSU EE494 Handout

- This Week
  - 21 Distance Relay
  - 50 Instantaneous Overcurrent Relay
  - 51 AC Time Overcurrent Relay
  - 52 AC Circuit Breaker
  - 67 AC Directional Overcurrent Relay
  - 79 Reclosing Relay
  - 81 Frequency Relay
  - 87 Differential Relay

ANSI Device Numbers – IEEE C37.2

- Number prefixes (or suffixes) are used for multiple similar devices on the same piece of equipment
  - Examples:
    - 101, 201, 301
    - 121, 221, 321
    - 21-1, 21-2, 21-3

- A slash (/) is used for multiple functions in a single device
  - Examples:
    - 50/51
    - 27/59

ANSI Device Numbers – IEEE C37.2

- Suffixes are used to describe and differentiate devices
  - Examples:
    - A, B, C – Phase
    - B – Bus
    - BF – Breaker Failure
    - G – Generator or Ground
    - L – Line
    - N – Neutral
    - P – Phase
    - Q – Liquid (oil), Negative Sequence
    - R – Remote
    - T – Transformer
    - V – Voltage
    - X, Y, Z – Auxiliary Devices
- Typically the letters I, O, and S are avoided

ANSI Device Numbers – IEEE C37.2

- Examples:
  - 87B, 87T, 87L, 87G
  - 187T, 287T
  - 50/51A
  - 71Q
  - 21/67N

ANSI Device Numbers – IEEE C37.2

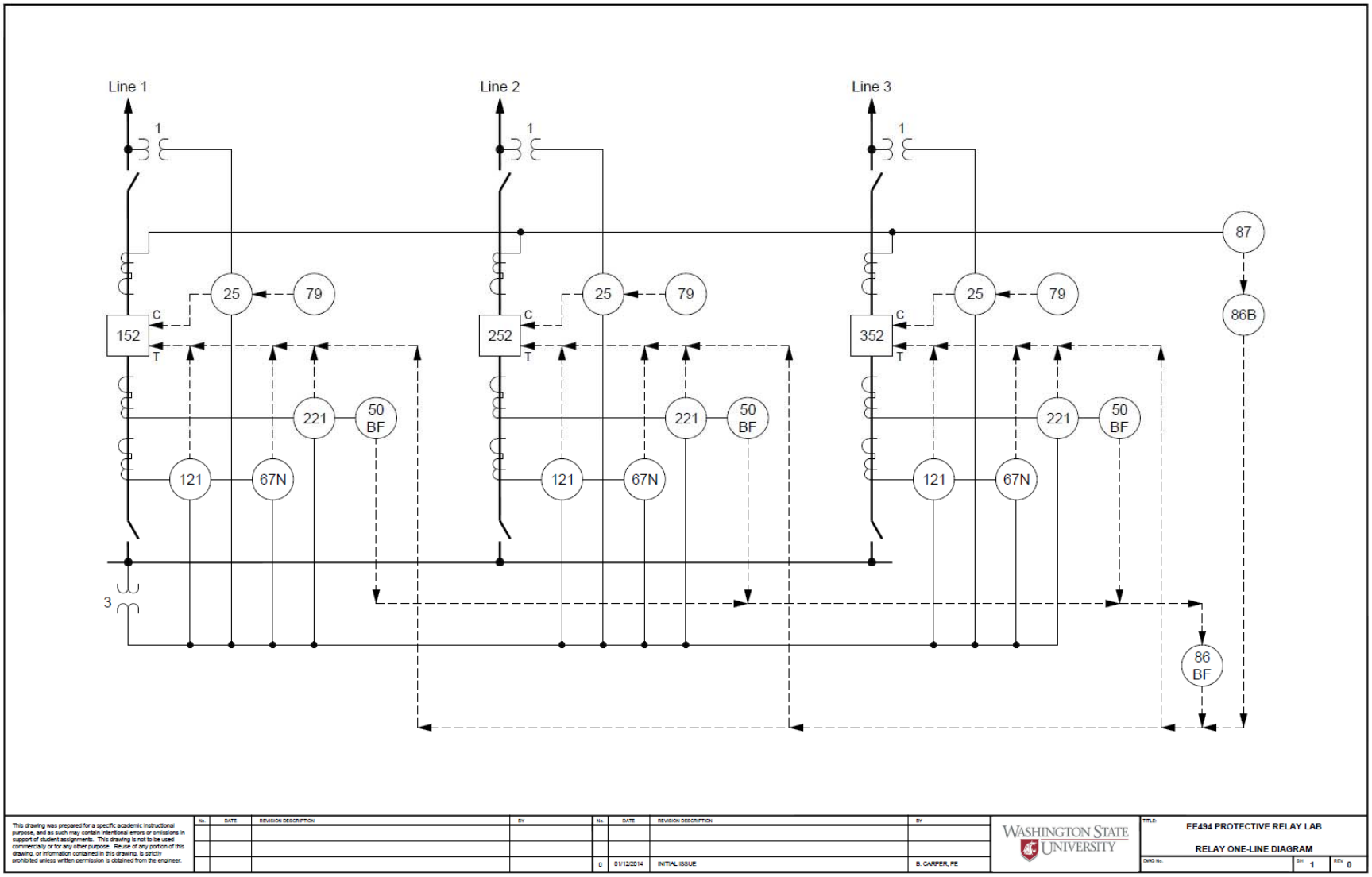

Compliance

- North American Electric Reliability Corporation (NERC)
- Protection and Control (PRC) Reliability Standards
  - PRC-001 System Protection Coordination
  - PRC-002 Disturbance Monitoring
  - PRC-004 Protection System Misoperations
  - PRC-005 Protection System Maintenance and Testing
  - And so on…

- ***NERC compliance is the best thing to happen to Relay Techs in 140 years of electric power! NERC PRC-005 has made relay testing and commissioning one of the most important functions in the utility industry.***

Tools of Protection

- Electrical theory and math
- Phasors
- Symmetrical components
- Per unit system

- *Attend other lectures this week on Math, Phasors, and Symmetrical Components*

3AC ENGINEERING

Applications

Overcurrent Protection

- Monday Afternoon – ABB CO
  - Electromechanical relay
  - Single-phase relay
  - Dual function: ANSI 50/51

- Tuesday Afternoon – BE1-51
  - Solid State relay
  - Three-phase relay with neutral
  - Dual function: ANSI 50/51

- Thursday Afternoon – SEL-551
  - Digital relay
  - Three-phase, ground, and neutral
  - Negative sequence
  - Reclosing
  - Multi-function: ANSI 50, 50/62, 51, 79

Image source: https://www.ebay.com/itm/NEW-WESTINGHOUSE-CO-11-OVERCURRENT-RELAY-4-12-AMP-183A806A25A-/351471436837
https://www.npeinc.com/content/images/thumbs/0002448_basler-be1-51-b1eb5pa0n0f_300.jpeg https://selinc.com/products/551/

Overcurrent Protection

- Most common protection for Distribution

- Sometimes used as protection for
  - Transmission Lines
  - Transformers
  - Generators and Machines
  - Busses

But typically as Backup (not primary) protection

Image source: https://www.ebay.com/itm/NEW-WESTINGHOUSE-CO-11-OVERCURRENT-RELAY-4-12-AMP-183A806A25A-/351471436837
https://www.npeinc.com/content/images/thumbs/0002448_basler-be1-51-b1eb5pa0n0f_300.jpeg https://selinc.com/products/551/

Overcurrent Protection

- What does an Overcurrent Relay respond to?
  - Current only
  - Magnitude only
  - Non-directional
  - Phase or Ground
  - SEL-551 can also do Negative Sequence current

- ABB CO and BE1-51 Relay
  - Total current (60Hz+Harmonics+DC)

- SEL-551 Relay
  - Fundamental current only (60Hz)

Image source: https://www.ebay.com/itm/NEW-WESTINGHOUSE-CO-11-OVERCURRENT-RELAY-4-12-AMP-183A806A25A-/351471436837
https://www.npeinc.com/content/images/thumbs/0002448_basler-be1-51-b1eb5pa0n0f_300.jpeg https://selinc.com/products/551/

Overcurrent Protection

Image source: https://www.naswgr.net/wp-content/uploads/2012/05/264C900A07-CO-8-2.jpg

Overcurrent Protection

- Coordinate with a wide variety of devices
  - Other Relays
  - Fuses
  - Reclosers
- Coordinate with different types of protection
  - Coordinate 51Q with 51P
  - Coordinate 51G with Fuse
- Coordinate with equipment damage curves

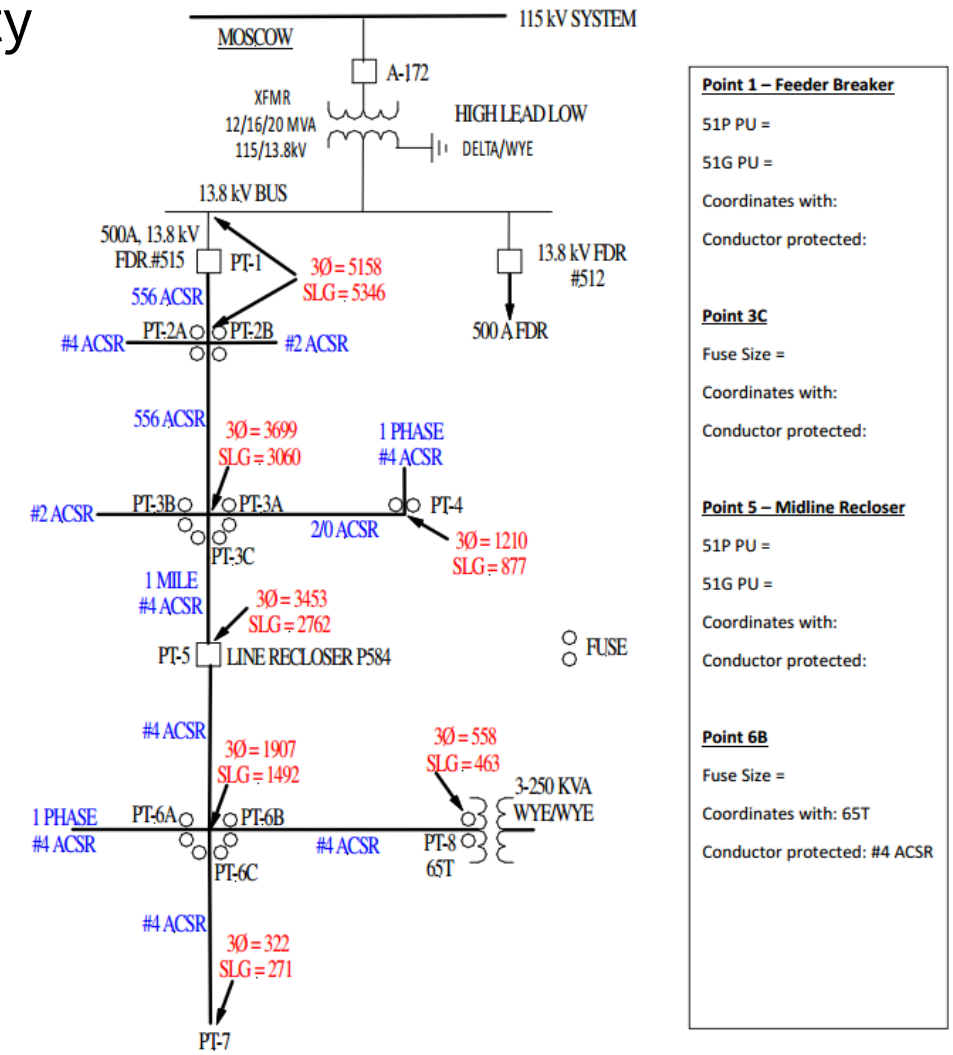

Image source: https://www.eiseverywhere.com/file_uploads/abeba02146302935aee17831e1137e81_MoscowFeederHandout.pdf

Overcurrent Protection

- Pickup = Sensitivity
  - Typically want the most sensitivity possible (lowest pickup)
  - But must be above load
- Time Delay = Coordination
  - Set to coordinate with the next device down-line

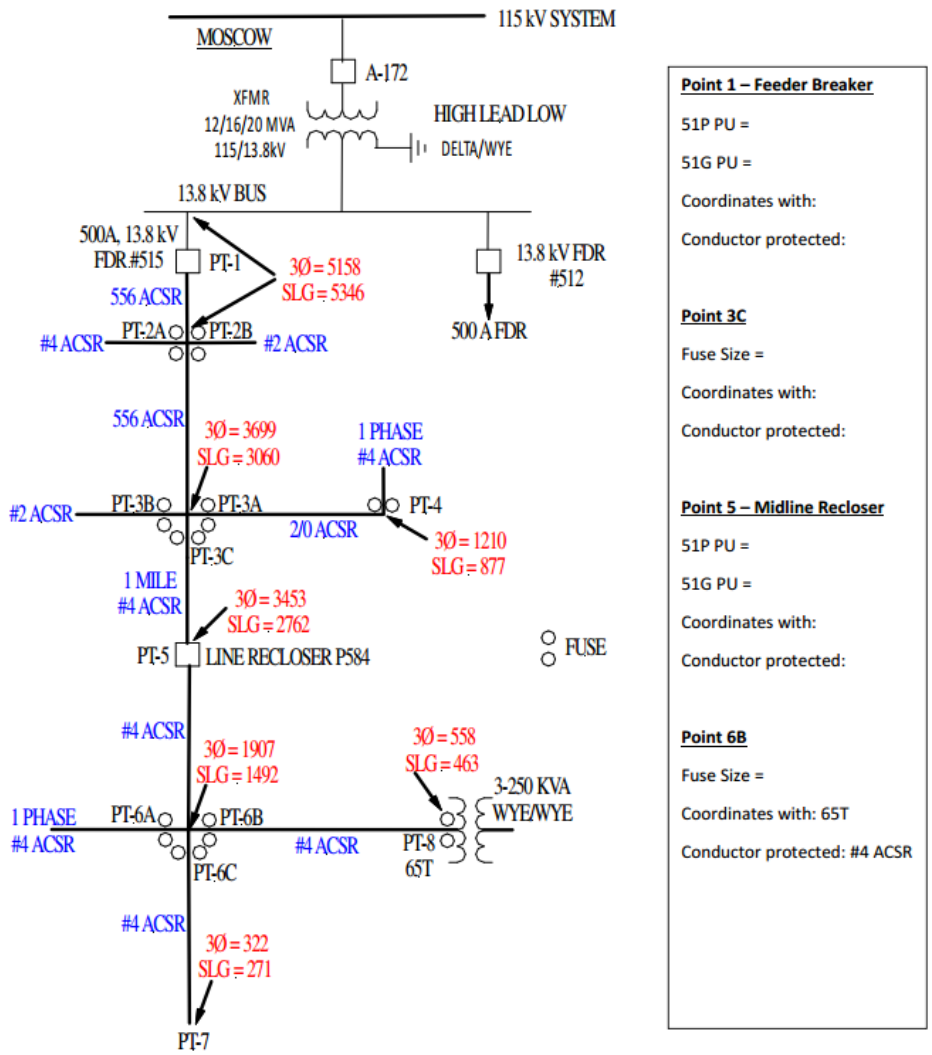

Image source: https://www.eiseverywhere.com/file_uploads/abeba02146302935aee17831e1137e81_MoscowFeederHandout.pdf

Time-Current Coordination Curve (TCC)

- Curve 1 is a Fuse
- Curve 2 is an Overcurrent Relay (51 Only)
- Curve 3 is an Overcurrent Relay (50 and 51)
- Typical overcurrent settings:
  - Pickup
  - Curve Type
  - Time Delay (for 50/62) or Time Dial (for 51)

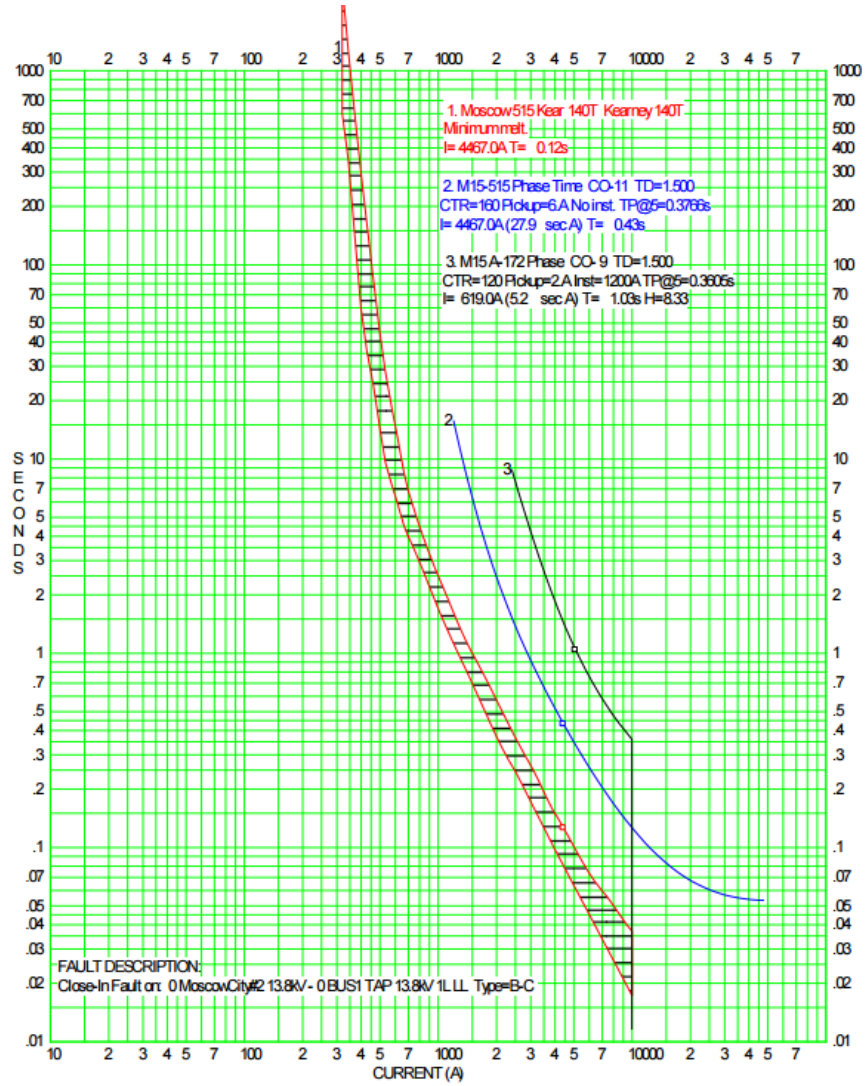

Image source: https://www.eiseverywhere.com/file_uploads/ff15529dc8c28a49e2ce97c72ea23840_2017HORSAvistaDistributionPaper.pdf

Testing the ABB CO Relay (E/M)

- Need to test it to set it
  - Pickup (50)
  - Time Dial (51)

- Verify calibration
  (for commissioning and for maintenance)
  - Pickup (50/51)
  - Curve (51)
    - 3 points for a curve?
    - Test at M=1.5, 4, 20?
  - Reset Timing (51)
  - Targeting
  - Can automate *some* of this

Testing the BE1-51 Relay (Solid State)

- BE1-51 has a microprocessor
  - Current is measured by an analog circuit
  - uP used for timing and logic
- Need to test it to set it
  - Pickup (50)
  - Time Dial (51)
- Testing, Commissioning, and Maintenance:
  - Calibration
  - Targeting
  - Power supply

Testing the SEL-551 Relay (Digital)

- Need to test it to set it?
- Need to verify calibration?

- Commissioning tests:
  - Test I/O
  - Test logic
  - Functional tests
  - In-service checks: STA, MET, SER, ER, COM, DAT, TIM, etc.
  - Sanity check

- Maintenance Tests:
  - In-service checks
  - Verify settings
  - Check for firmware updates and service bulletins
  - Test I/O
  - Trip check

Reclosing

- Tuesday Afternoon
  - ABB RC
    - Electromechanical work of art!
- Thursday Afternoon
  - SEL-551
- Uses:
  - Fuse-Saving Schemes
  - Fuse-Blowing Schemes
  - High-Speed Reclosing Schemes
  - Automatic Switching Schemes

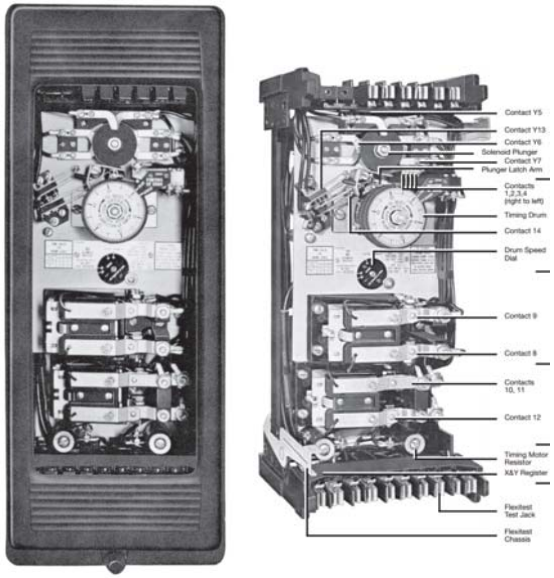

Image source: https://library.e.abb.com/public/63af95ea8989a531c1256e7e0031751a/DB41-602e%20%20%20RC%20RCL.pdf http://baslerelectric.azureedge.net/Images/Products/1281.jpg

Reclosing

- Testing & Commissioning
  - Logic
  - Timing
  - Application check (sanity check)

- Maintenance
  - Timing
  - Output contacts

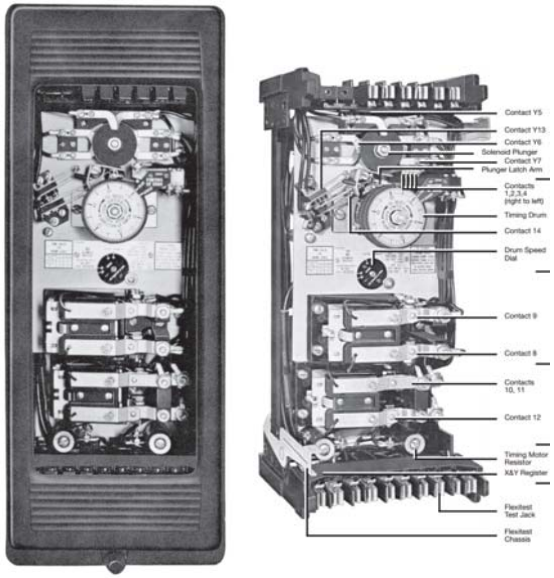

Image source: https://library.e.abb.com/public/63af95ea8989a531c1256e7e0031751a/DB41-602e%20%20%20RC%20RCL.pdf http://baslerelectric.azureedge.net/Images/Products/1281.jpg

Frequency Protection

- Tuesday Afternoon
  - BE1-81O/U
    - Solid State relay
- Applications
  - Generator/Machine protection
  - Underfrequency load shedding
- Settings: pickup, timing
- Testing, Commissioning, and Maintenance:
  - Calibration
  - Targeting
  - Power supply

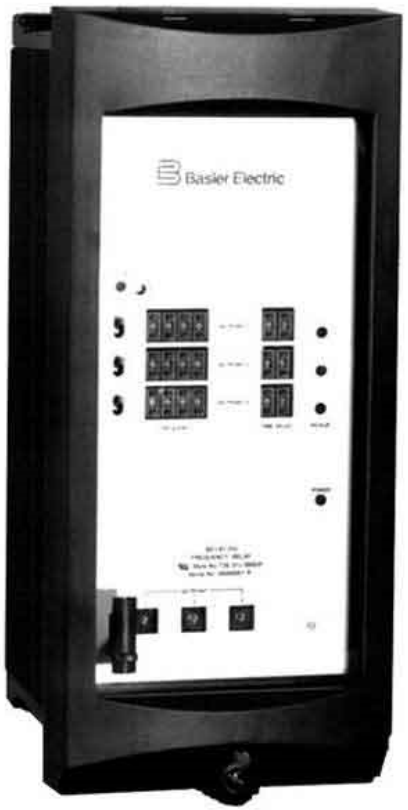

Image source: http://www.basler.com/Product/BE1-81O-U-Digital-Frequency-Relay

Differential Protection – Transformer

- Wednesday Morning – ABB HU
  - Single Phase
  - Transformer Differential Protection (87T)
  - Percentage Differential with Harmonic Restraint
  - 2-winding or 3-winding

- Differential = Kirchhoff's Current Law
  Sum of the currents equals zero
  What comes in, must go out

- In the lab
  - Operate, Restraint, Slope
  - Inrush, 2nd Harmonic Restraint

Image source: http://abbimageservice.cloudapp.net/public/images/f88f17a0-6227-4df0-8d16-57b8773ac258/preview.jpg?target=http%3A%2F%2Fabbcloud.blob.core.windows.net%2Fpublic%2Fimages%2Ff88f17a0-6227-4df0-8d16-57b8773ac258%2Fpreview.jpg%3Fcrop%3D0%2C0%2C400%2C400%26width%3D400%26height%3D400&key=3f2d890a68cbb5927c1141ee1415bba7

Directional Overcurrent Protection

- Wednesday Afternoon – GE JBCG
  - Electromechanical relay
  - Single-phase (Ground) relay
  - ANSI 67N
  - Instantaneous 67N and Time 67N
- Directional Control (Polarization)
  - Dual polarized (zero-sequence current and/or voltage)
- Number corresponds to the curve shape

Image source: https://ssli.ebayimg.com/images/g/Ml4AAOxyFIFR-T5v/s-l1600.jpg

Directional Overcurrent Protection

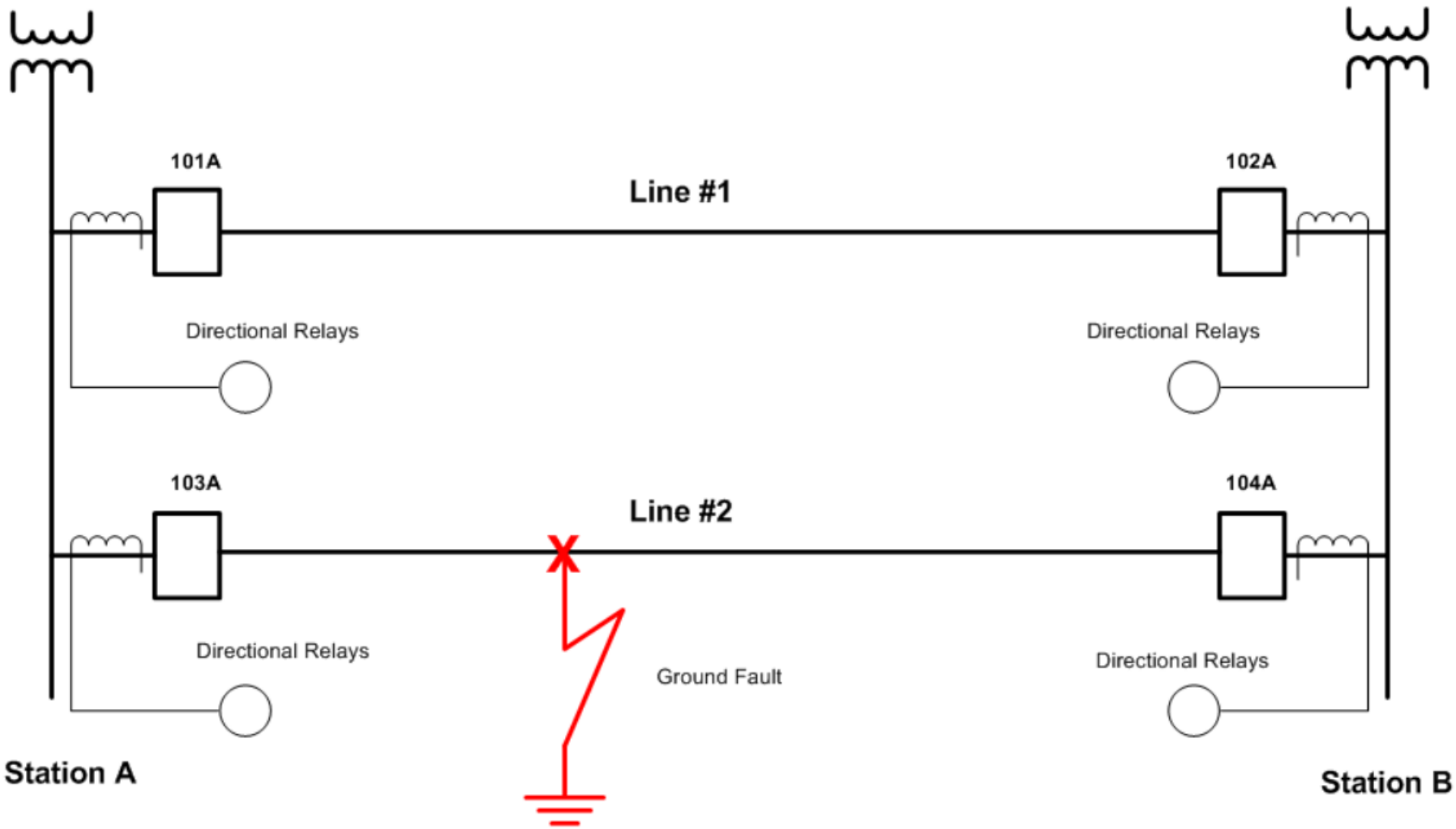

Image source: https://www.eiseverywhere.com/file_uploads/aaf42a76a5588f69c7a1348d6f77fe0f_Introduction_to_System_Protection-_Protection_Basics.pdf

Directional Overcurrent Protection

- What does the JBCG relay measure and respond to?

- Operates on:
  - Ground current *magnitude*
    - Wired as a residual current (sum of all three phases)

- Controlled by (polarized by):
  - *Phase angle difference* between…
    - Ground current and zero-sequence voltage (Ig lags Vpol by 0 to 60)
    - Ground current and zero-sequence current (Ig leads Ipol by 0 to 40)

- Note:
  - *Phase angle* of the ground current doesn't matter; just the angle difference.
  - *Magnitude* of polarizing quantity doesn't matter*

    ** Minimum values for the directional element to operate; maximum values to not damage the relay.*

Distance Protection

- Thursday Afternoon – GE CEY51A
  - Mho distance relay
  - Three-phase
  - One zone
  - ANSI 21

- Distance = Electrical Impedance
  - Current magnitude
  - Voltage magnitude
  - Phase angle between current and voltage

Image source: https://www.gegridsolutions.com/multilin/images/products/cey.gif

Distance Protection

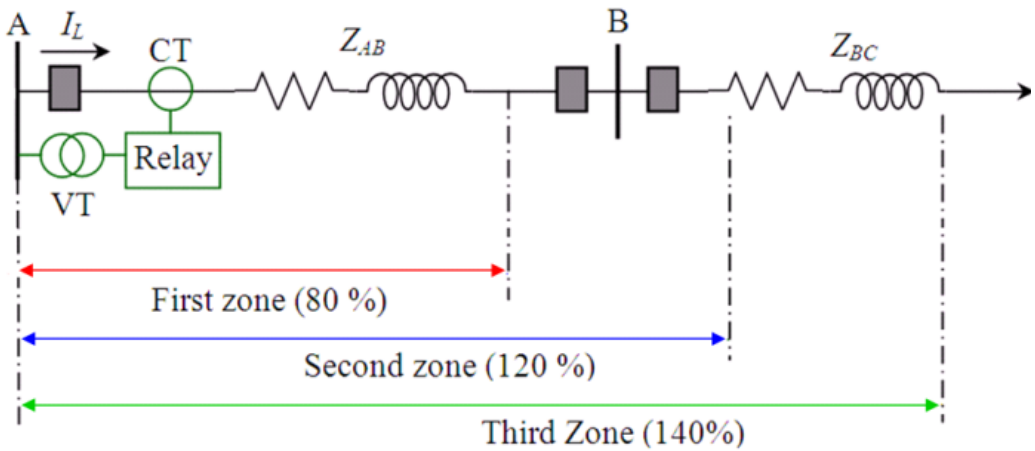

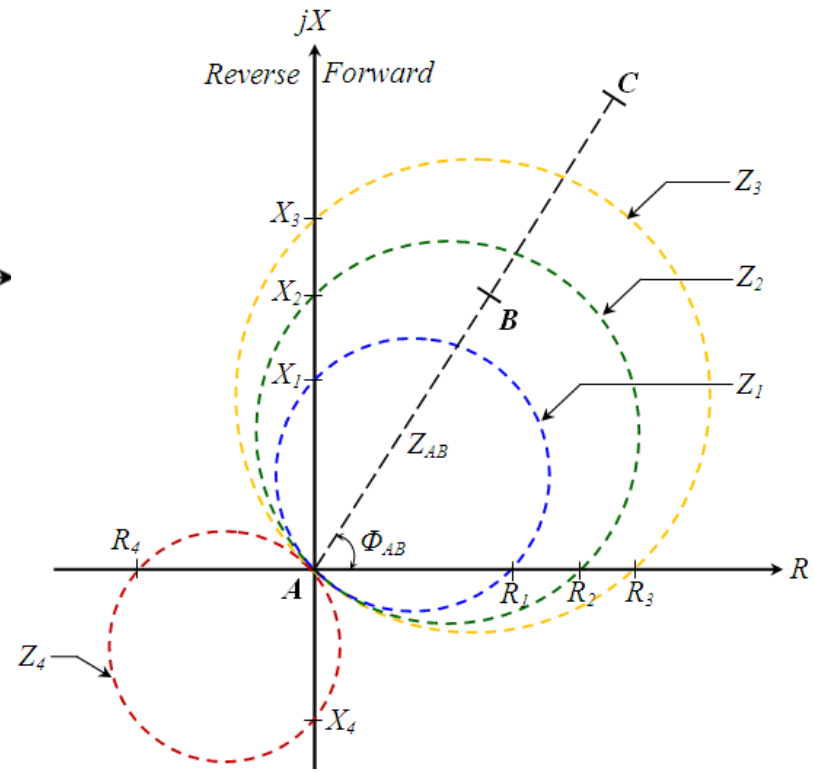

Image source: http://article.sapub.org/image/10.5923.j.eee.20120203.10_001.gif http://www.intechopen.com/source/html/43897/media/image16.png

3AC ENGINEERING

Recap

Tips

- Parking and speeding
- Be on time
- Watch out for the afternoon snacks
- Enjoy the evening events
- Plan around happy hour
- Embrace variety
- Talk to other people from other companies
- Know your schedule and plan ahead
- Learn everything you can; be engaged
- Hands-On Relay School can be tremendous for your career
- Have fun!

3AC ENGINEERING

BRENT L. CARPER, P.E.
Principal Engineer

brent.carper@3AC-Eng.com
office: 509-339-7626
cell: 509-339-3848

3AC-Eng.com