Breaker Failure Protection

33rd Annual Hands-On Relay School

March 14-15, 2016

Brent Carper, PE

Engineering Manager – Relay Application Innovation, Inc.
Adjunct Professor – Washington State University
Brent.C@RelayApplication.com

Relay Application Innovation, Inc.

Washington State University

Outline

- Protection System Failures and Breaker Failures
- BF Protection versus BF Relaying
- BF Relay Schemes and Logic
- Special BF Situations
- BF Settings and Timing
- Impacts from Changing Technology
- Testing and Maintenance of BF Schemes

Primary Reference:

C37.119 -2005 IEEE Guide for Breaker Failure Protection of Power Circuit Breakers

What is a Breaker Failure?

Protection Failure

Protection System Failures

- Relay failure
- Settings failure
- Control system failure
- CT/PT failure
- Battery system failure
- Catastrophic control house failure (fire)

Breaker Failures

- Fails to trip
- Trips too slow
- Fails to interrupt fault current
- Fails to interrupt load current
- Flashover when open
- Fails to close
- Auxiliary contact problems
- Catastrophic failure

Outline

- Protection System Failures and Breaker Failures
- BF Protection versus BF Relaying
- BF Relay Schemes and Logic
- Special BF Situations
- BF Settings and Timing
- Impacts from Changing Technology
- Testing and Maintenance of BF Schemes

Breaker Failure Protection by Coordination

Breaker Failure Protection by Coordination

Breaker Failure Protection by Coordination

Breaker Failure Protection by Coordination

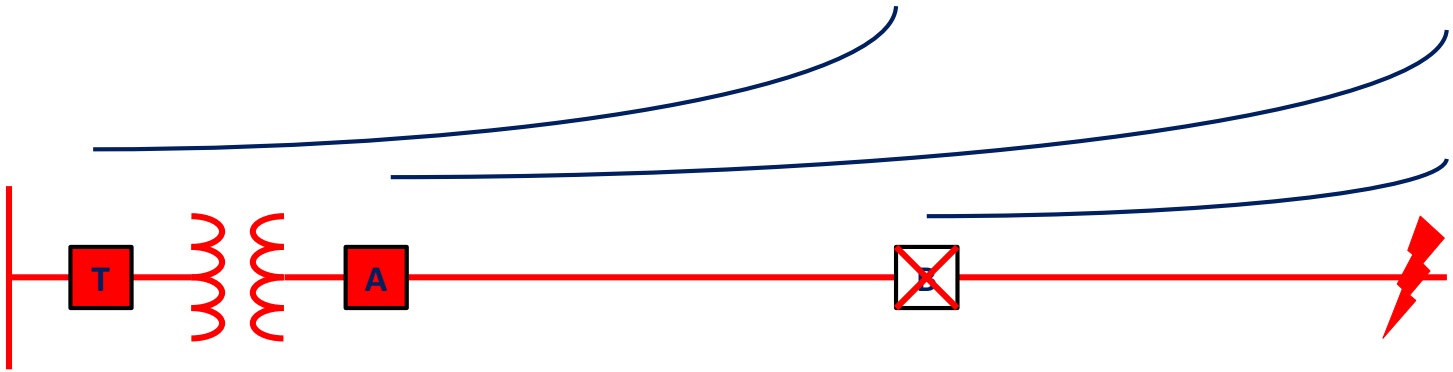

Breaker Failure Protection by Coordination

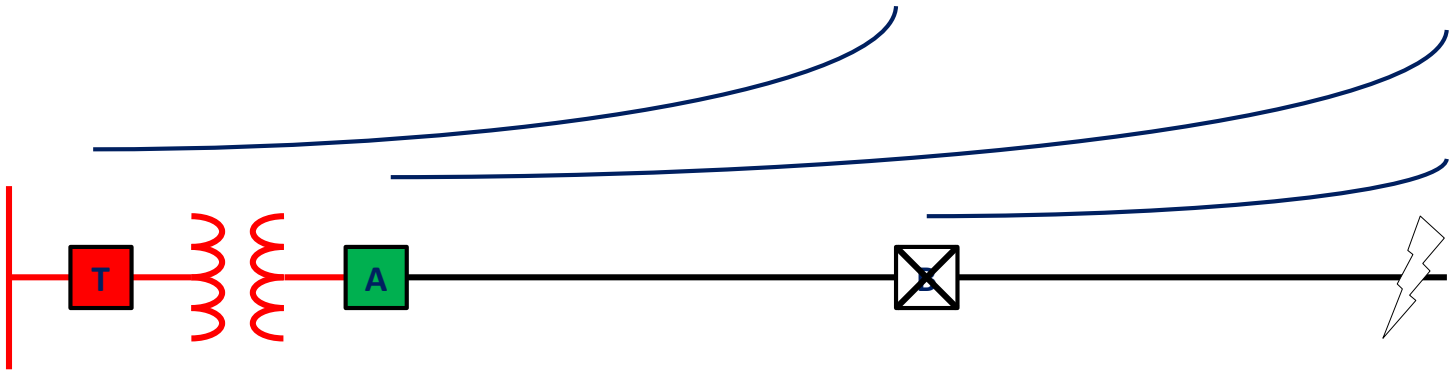

Advantages:

Simple – No extra equipment

Simple – No risk of misoperation

Ultimate protection. Covers ALL failures, not just Breaker Failure (failure of breaker, relay, settings, controls and wiring, battery, etc.)

Disadvantages:

Slow

May not be possible for the backup relaying at [A] to see all faults

Conclusions:

Common practice for Distribution, but typically not sufficient for Transmission.

There is "Breaker Fail <u>Protection</u>" even though there is not "Breaker Fail <u>Relaying</u>".

Breaker failure protection is built-in to good protection practices.

Breaker Failure Protection by Coordination

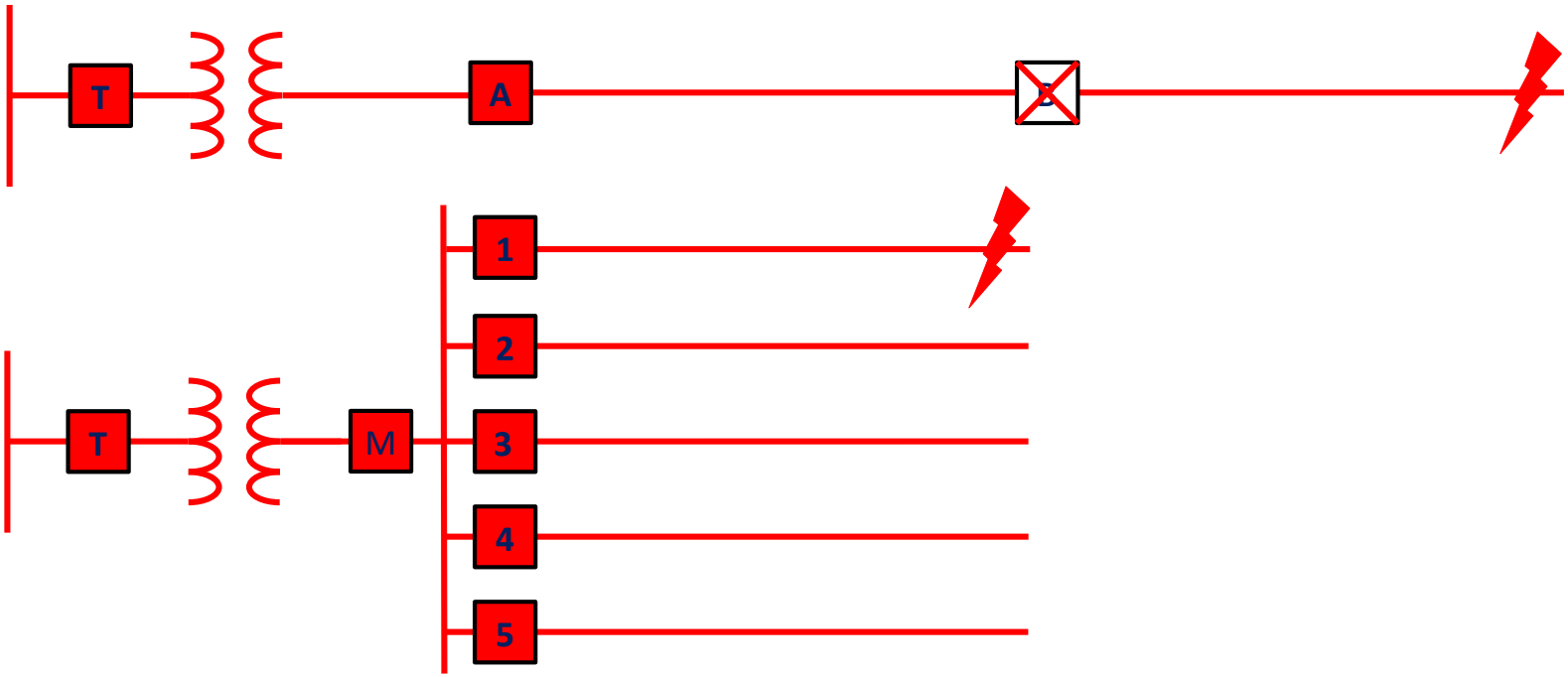

Breaker Failure Protection by Coordination

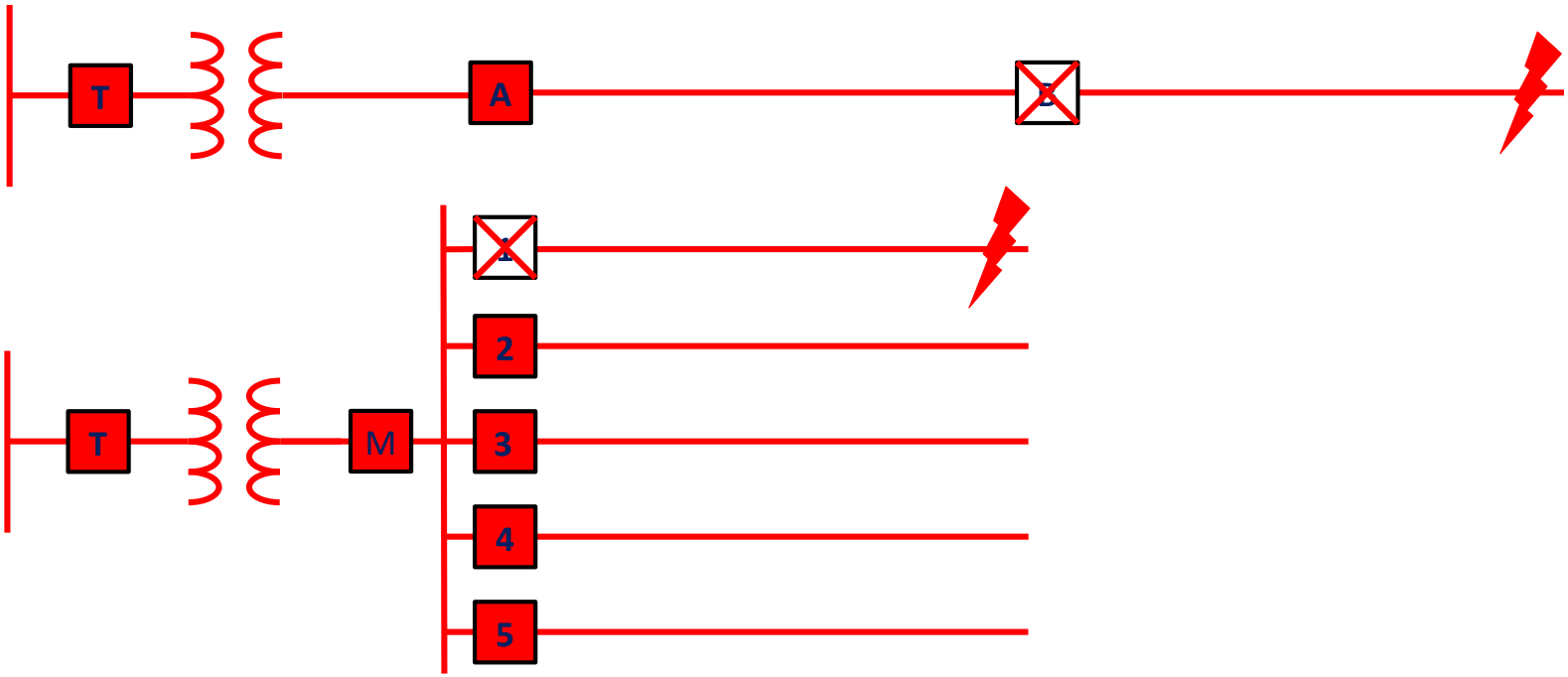

[A] can *probably* back up [B] and see a minimum fault all the way at the end of the line.

[M] *may not* be able to fully back up the feeder breakers for an end of line fault.

Example: Assume 200A load per feeder section, and 800A minimum fault current at the end of line.

[A] has 400A max load and needs to pickup on an 800A fault.

[M] has 1000A max load, so it cannot be set to pickup on an 800A fault.

IEEE Example

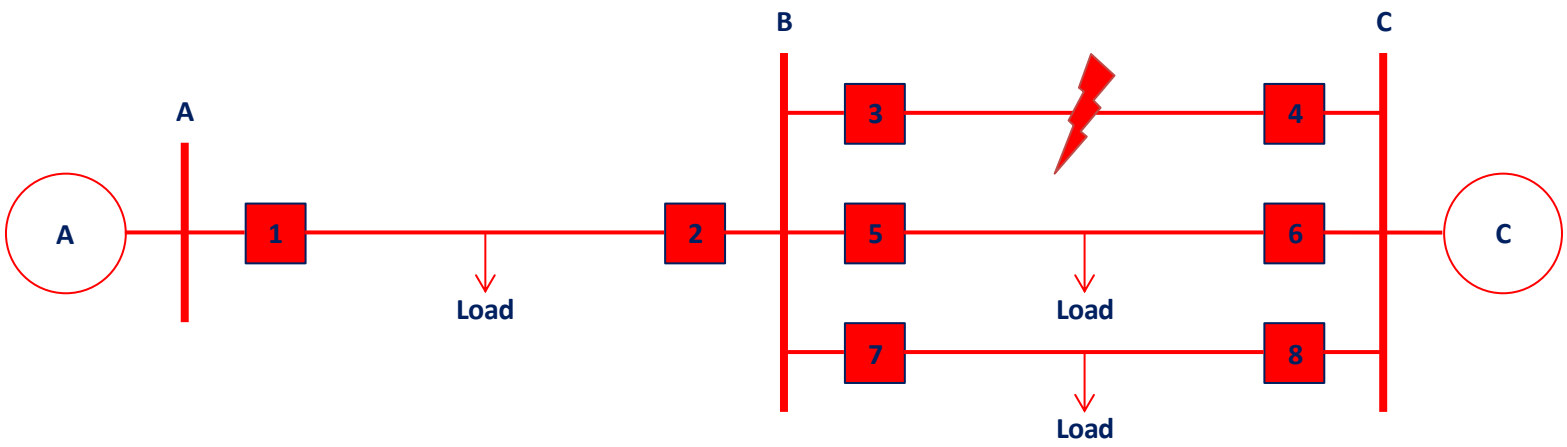

IEEE Example – Proper Clearing

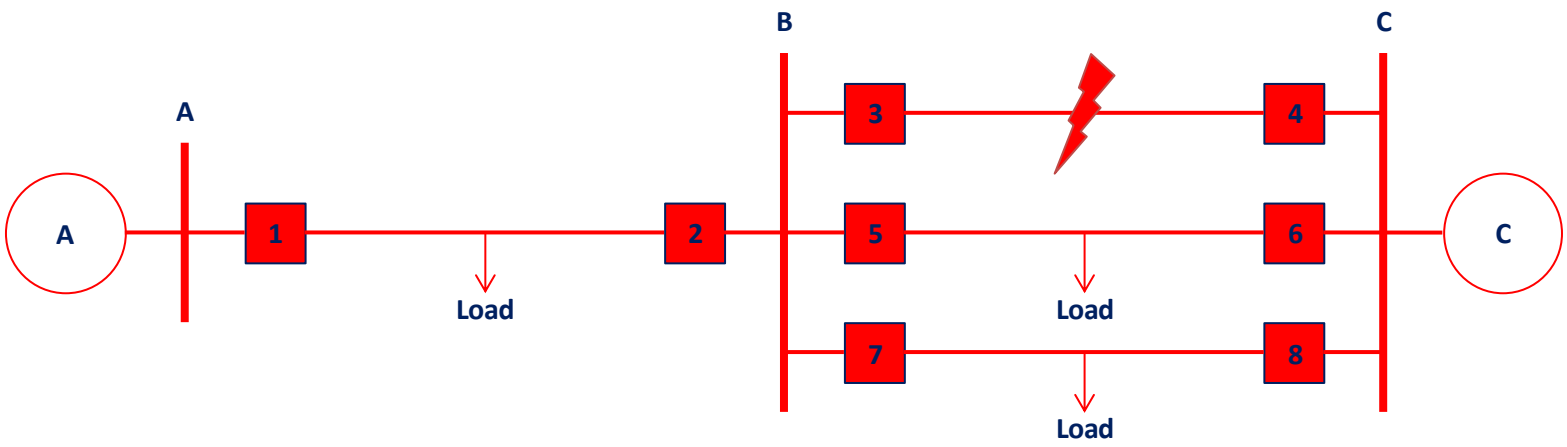

IEEE Example – Proper Clearing

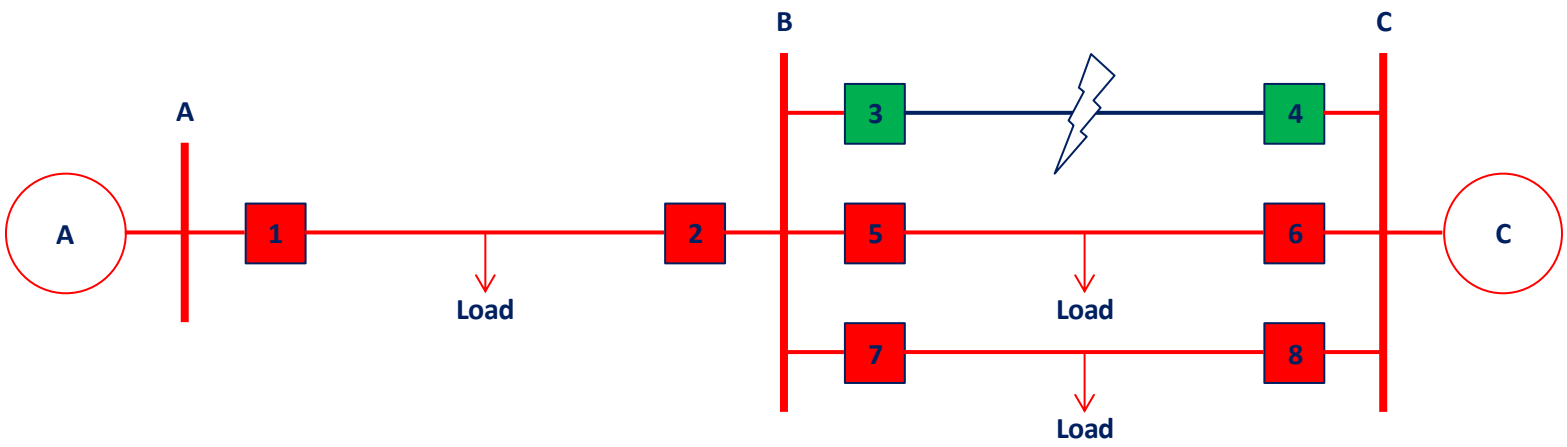

IEEE Example

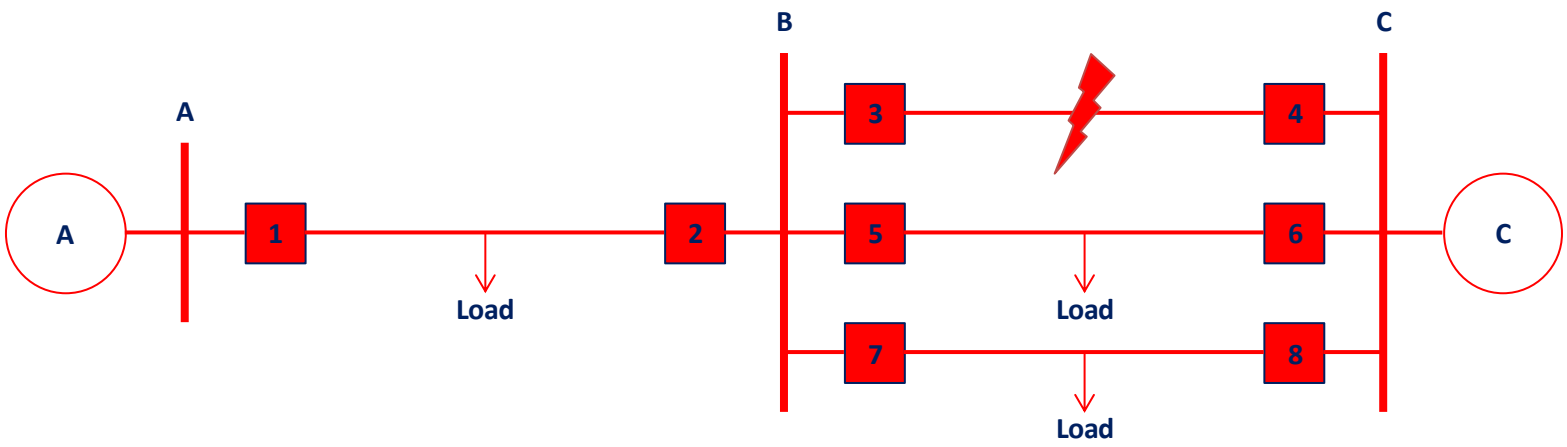

IEEE Example – Breaker Failure

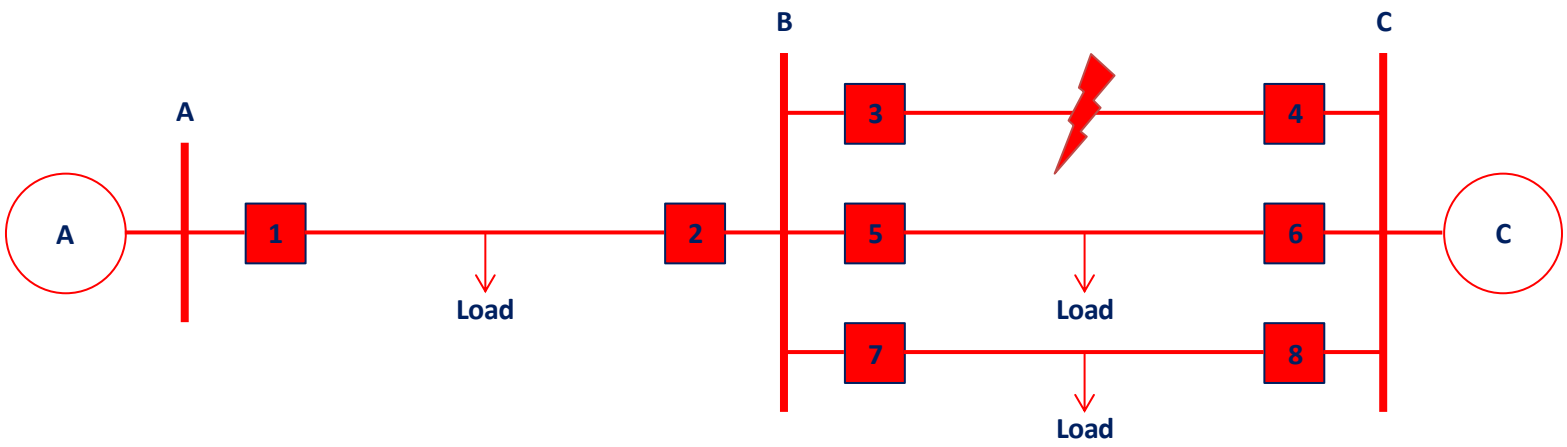

IEEE Example – Breaker Failure

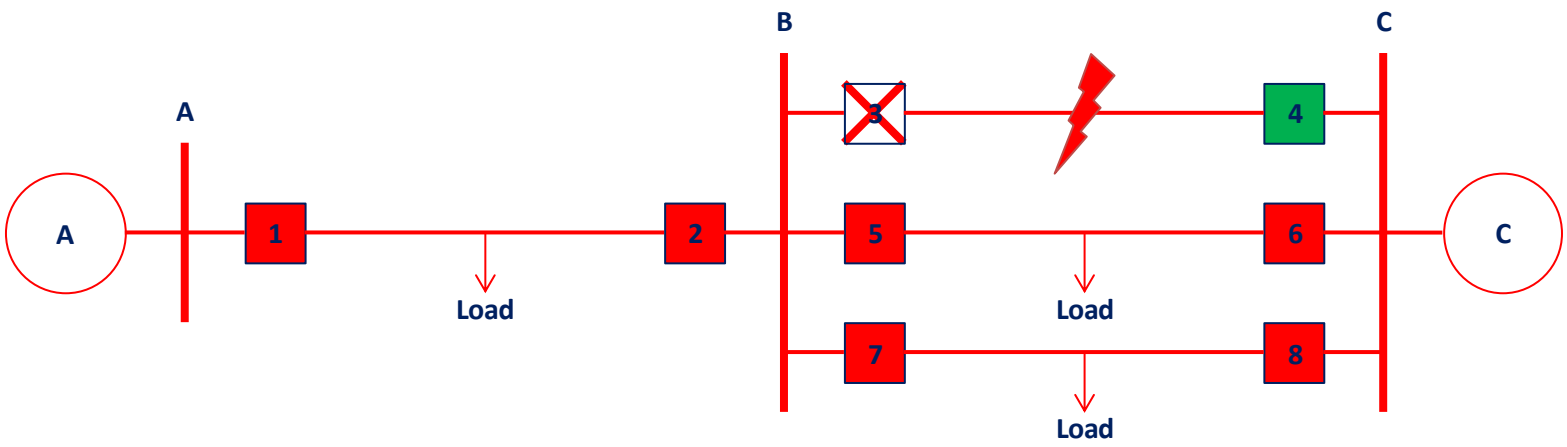

IEEE Example – Remote Backup

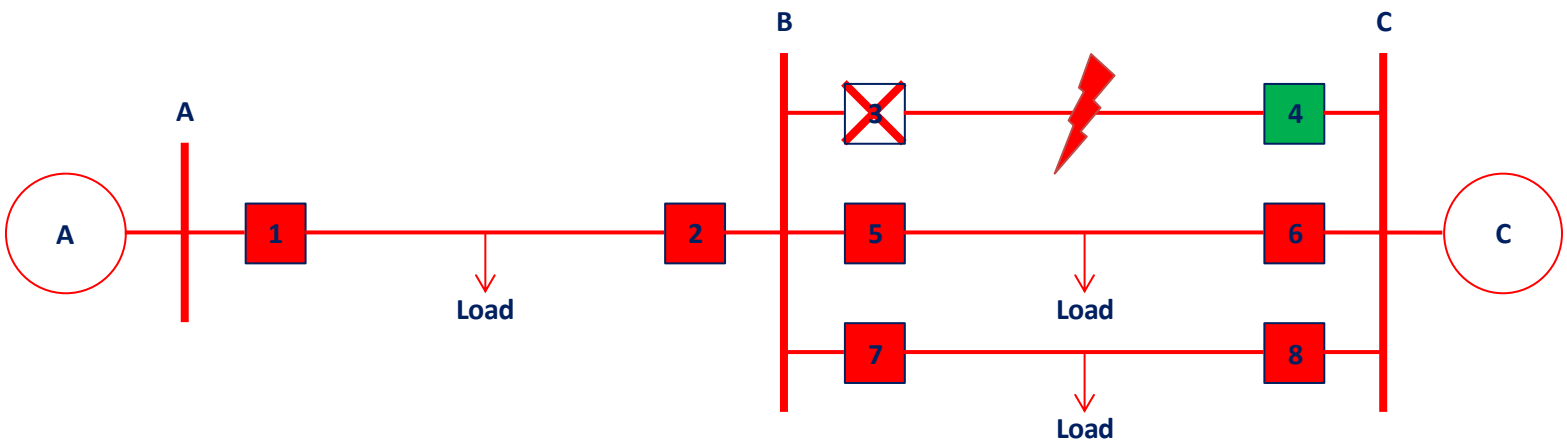

IEEE Example – Remote Backup

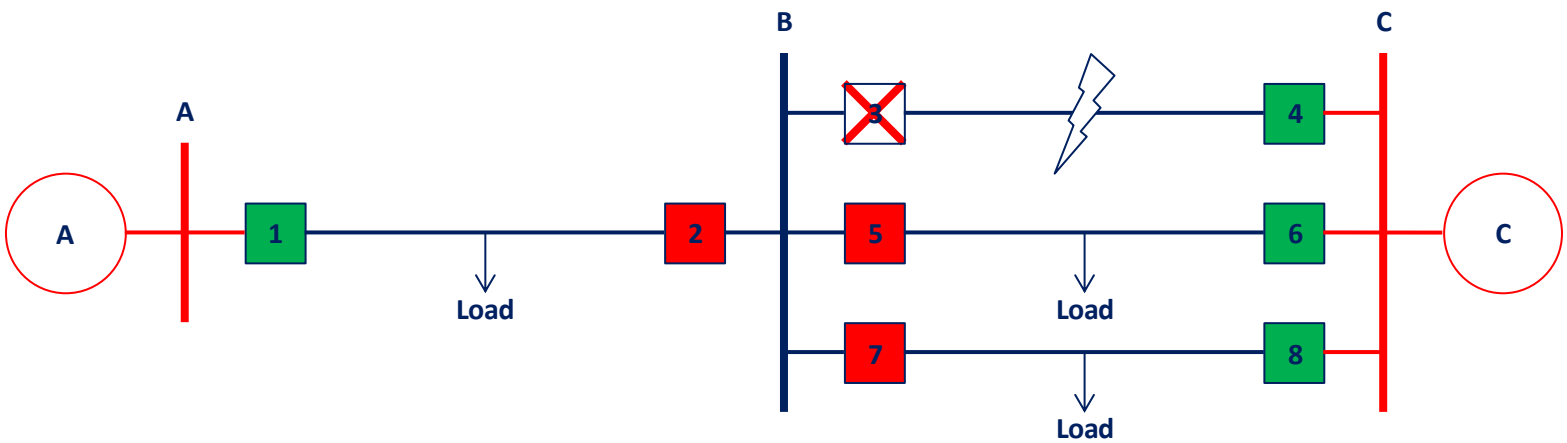

Advantages:

- Completely independent of Substation B.

Disadvantages:

- Slow – system instability
- Slow – voltage dips
- Wide area outage
- May not be possible for the backup relay to see all faults

IEEE Example

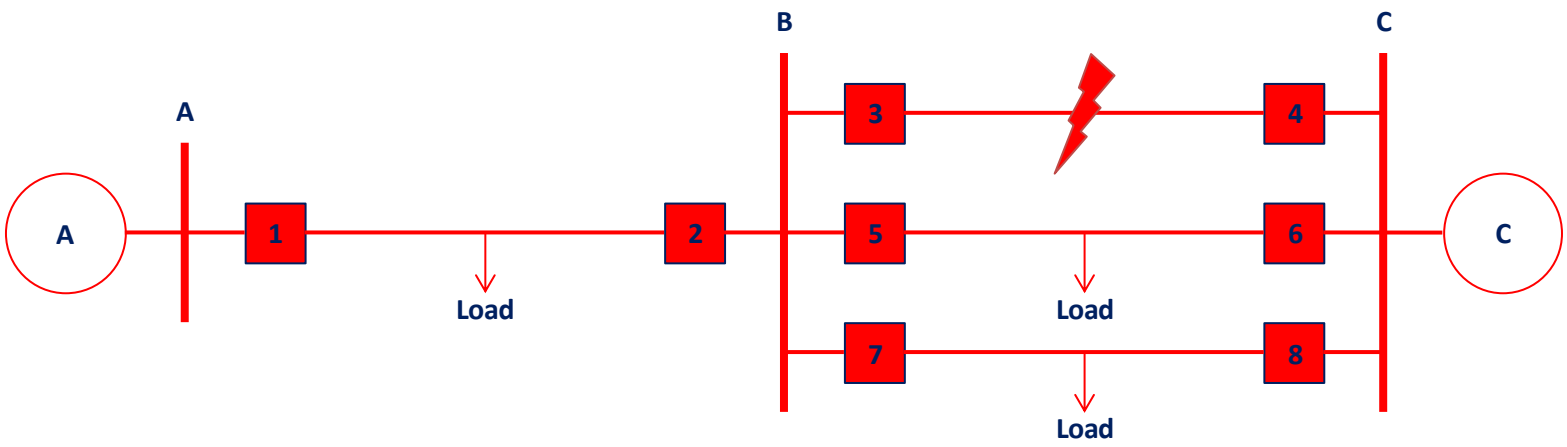

IEEE Example – Breaker Failure Relaying

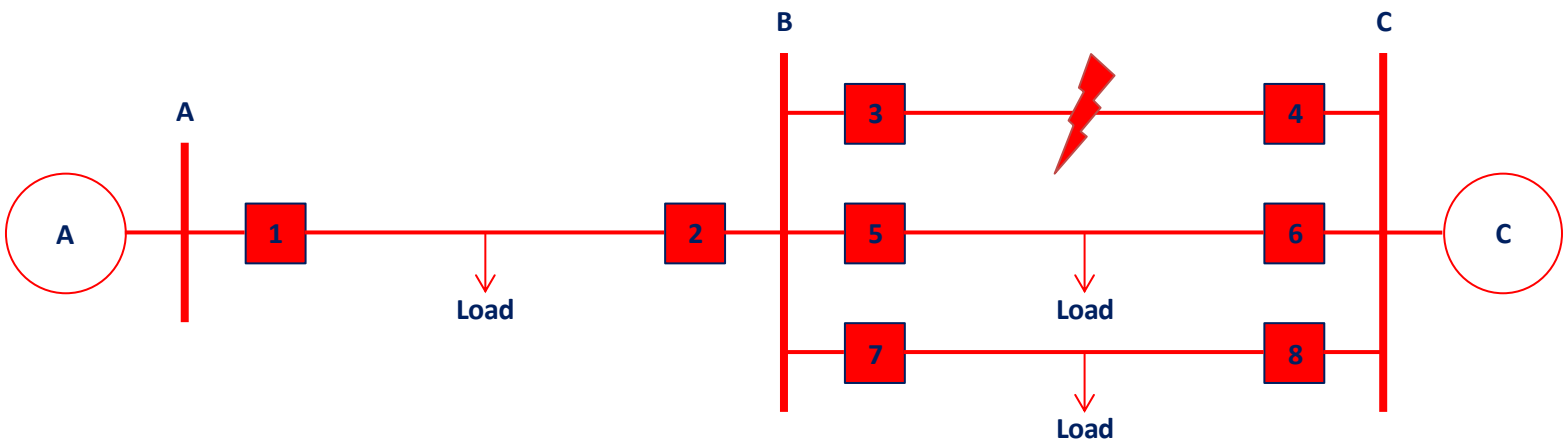

IEEE Example – Breaker Failure Relaying

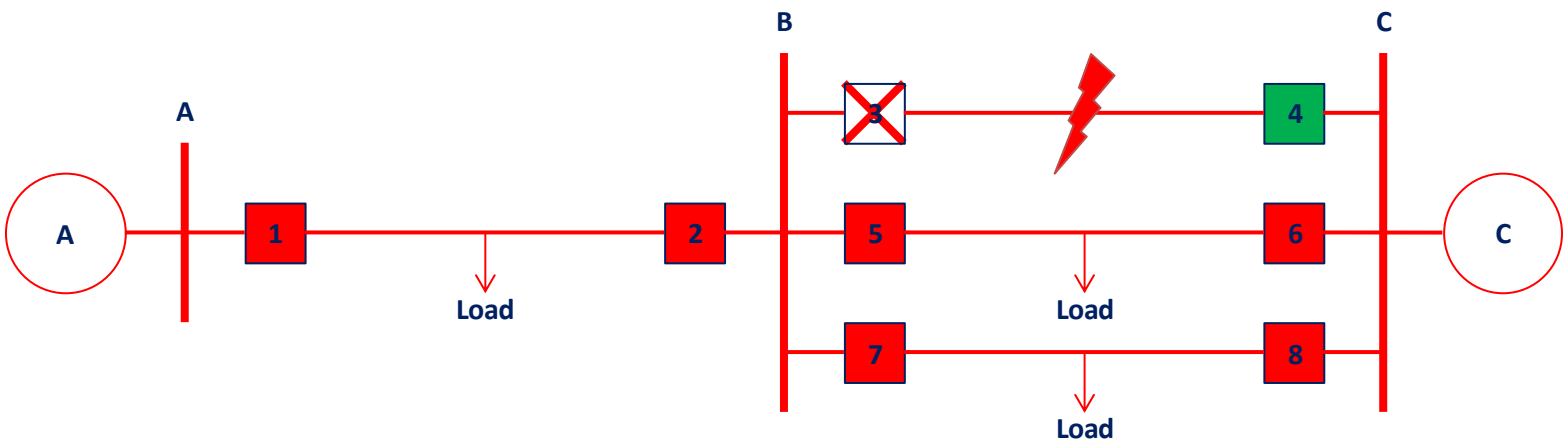

IEEE Example – Breaker Failure Relaying

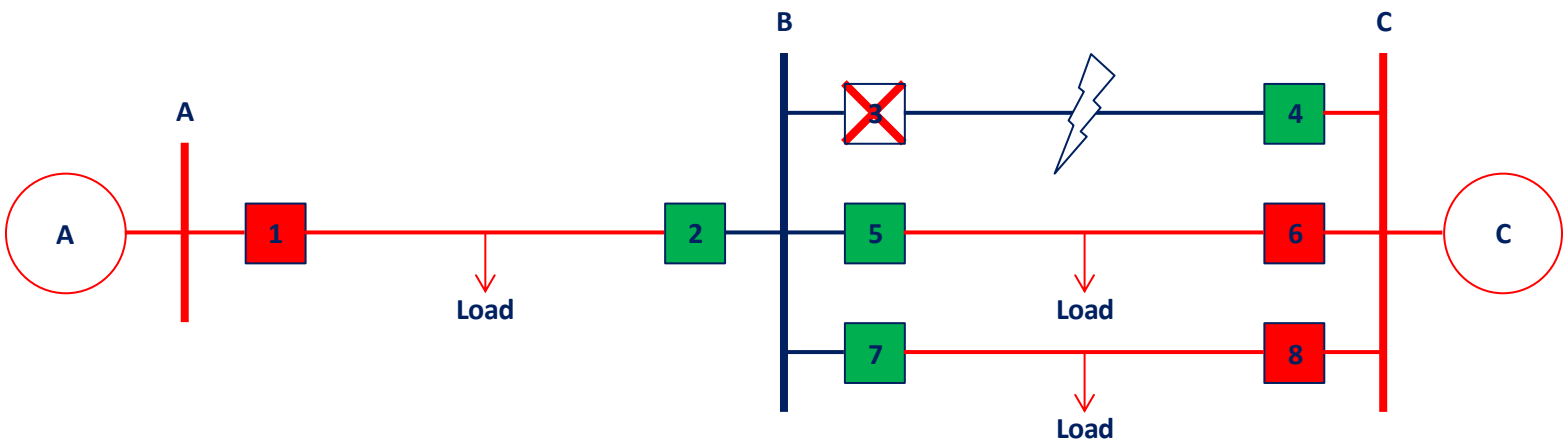

BFR on breaker [3] detects breaker failure condition

- BFR trips a Lockout relay
- Lockout relay (86) trips breakers [2], [5], and [7]
- Lockout relay blocks close of [2], [5], and [7]

What else?

- Transfer Trip to breaker [4]
- Cancel reclose of [4]

Outline

- Protection System Failures and Breaker Failures
- BF Protection versus BF Relaying
- BF Relay Schemes and Logic
- Special BF Situations
- BF Settings and Timing
- Impacts from Changing Technology
- Testing and Maintenance of BF Schemes

Breaker Failure Relaying

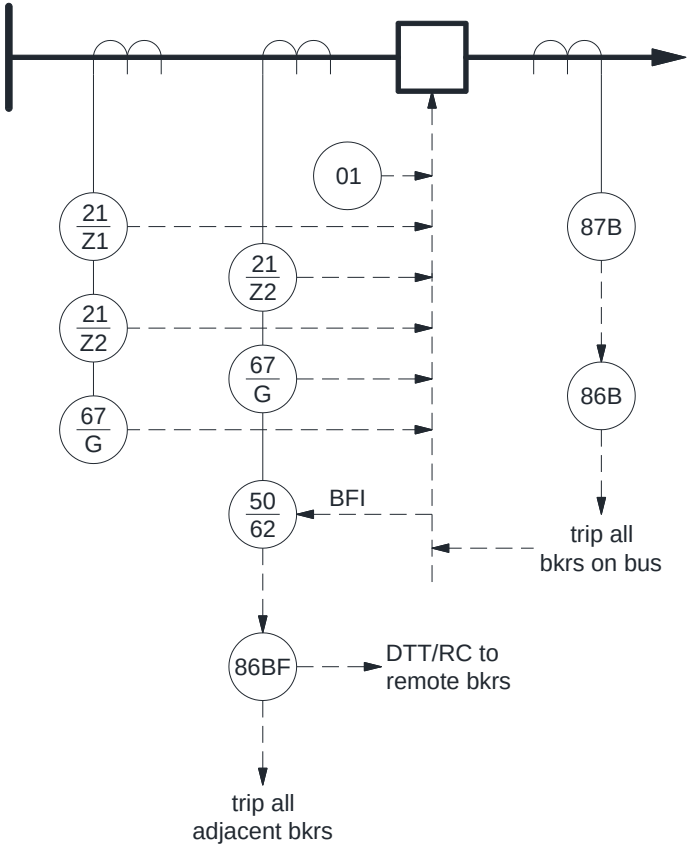

Breaker Failure Relaying

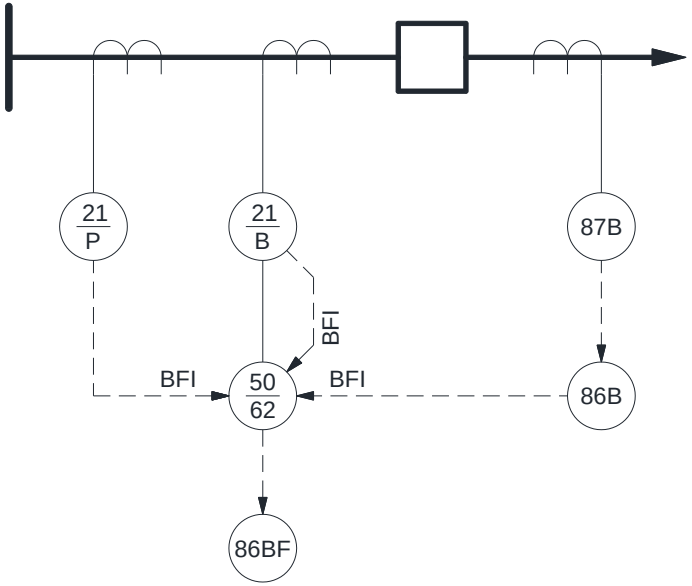

BREAKER FAILURE RELAYING

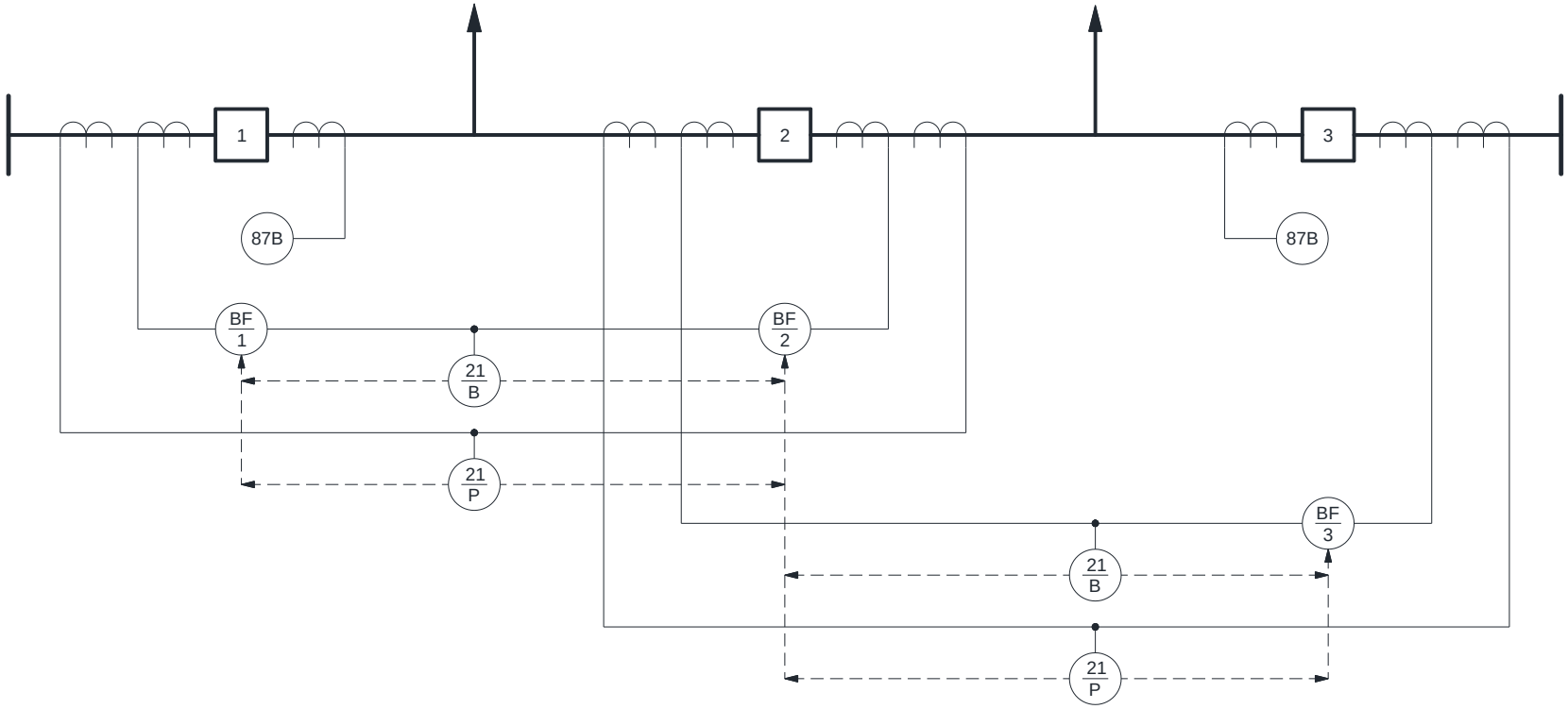

Example Logic: BE1-50BF

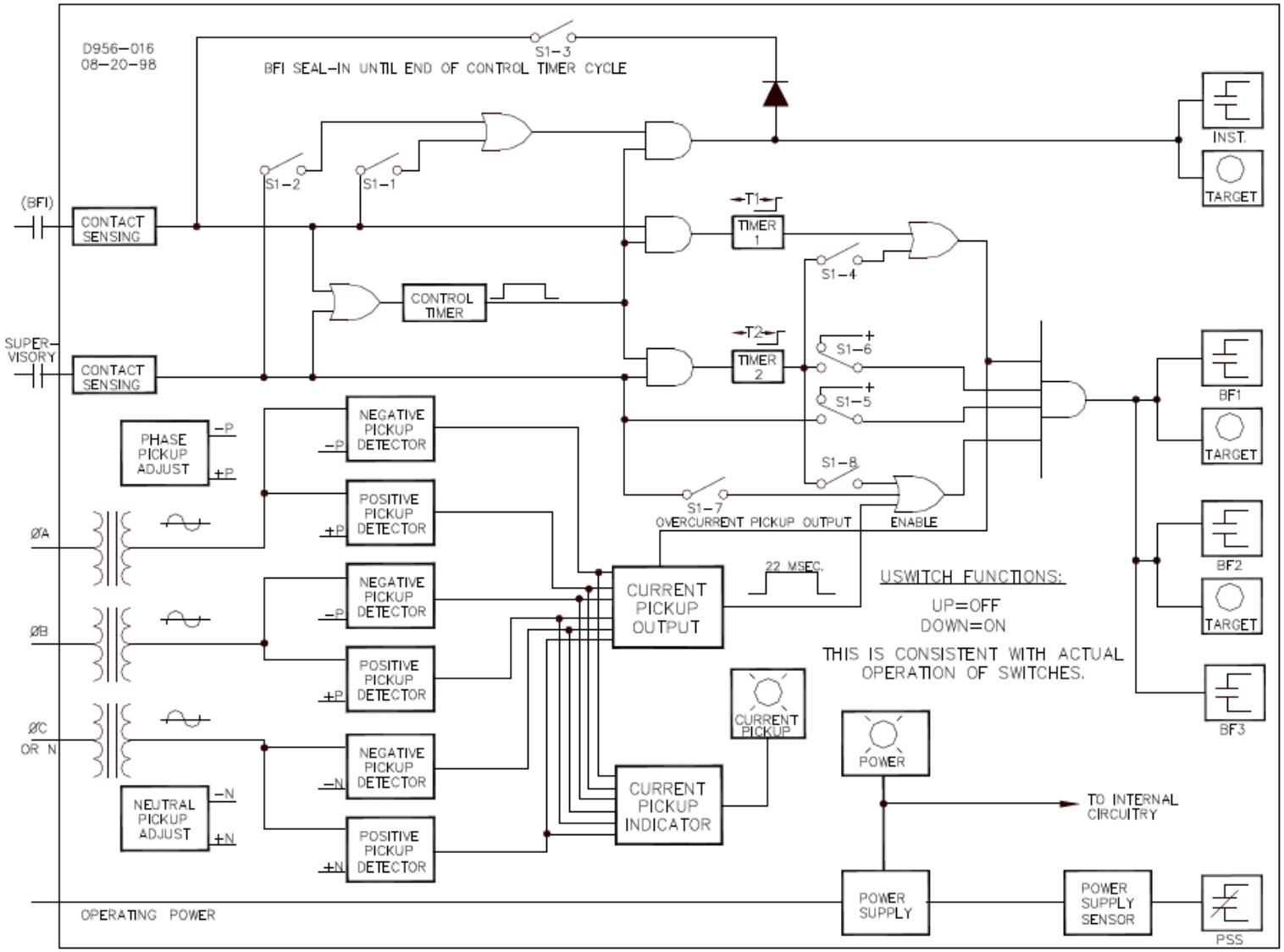

Breaker Failure Logic

1. Basic Breaker Failure Scheme
2. 50BF Torque Control
3. Breaker Re-Trip Logic
4. BFI Control Timer
5. BFI Seal-In
6. Minimal Current Scheme
7. Timer Bypass Scheme
8. Dual Timer Scheme
9. Special Schemes

Breaker Failure Logic – Basic

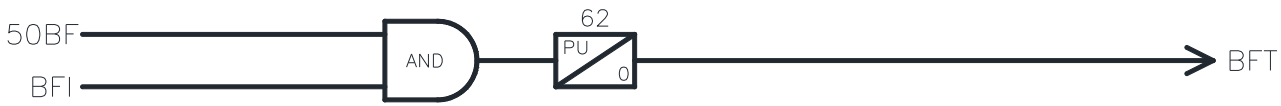

Four Parts to a Breaker Failure Scheme:

- Fault Detector (50BF) or other Failure Detectors
- Initiator Circuit (BFI)
- Logic and Timers (62)
- Output Circuit (BFT)

Breaker Failure Logic – 50BF Torque Control

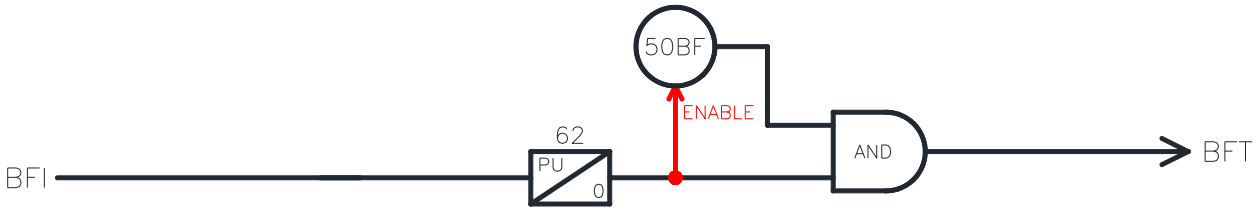

50BF Torque Control: BFI is timed; current is checked once

Prevents chattering or restart of the timer due to 50BF

- 50BF can be Fault Detector, Load Current Detector, or Low Current Detector

Breaker Failure Logic – Re-Trip

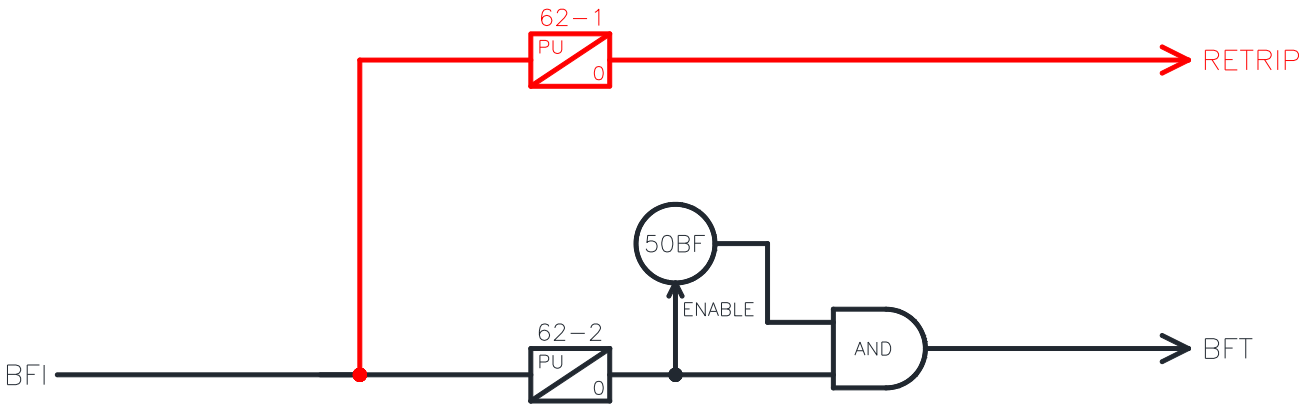

Retrip is common for dual trip coil breakers

Timer 62-1 set differently depending on the scheme strategy

- Example: retrip with alarm

Timer 62-2 always greater than 62-1

- Example: 3 cycle breaker, 62-1 retrip and alarm at 5 cycles, 62-2 BFT at 10 cycles

Breaker Failure Logic – BFI Control Timer

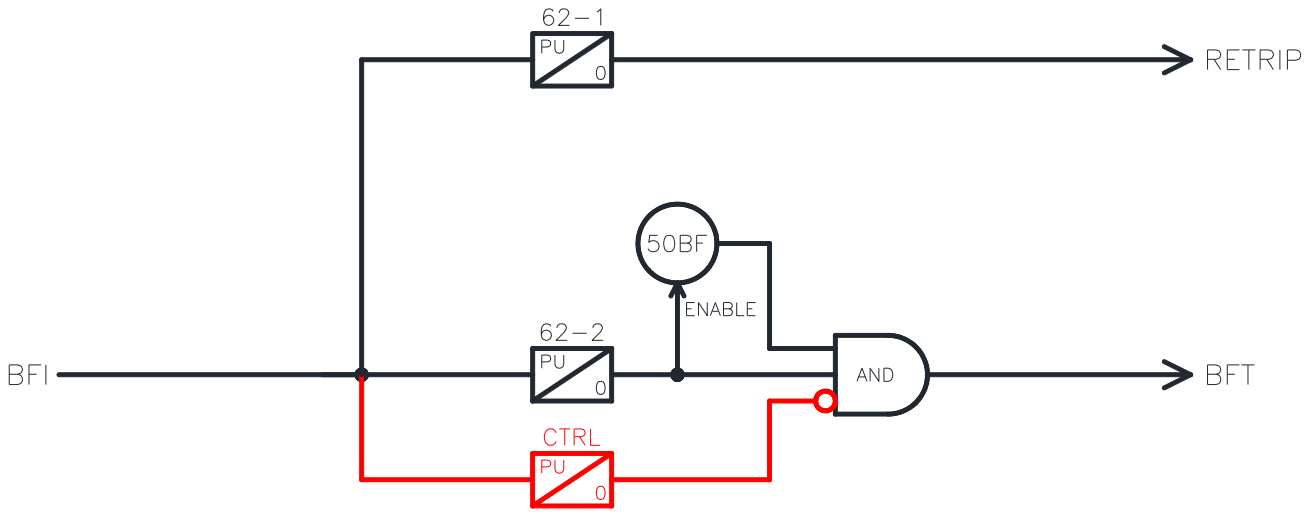

BFI Control Timer creates a “window” for Breaker Failure

- Prevents misoperations due to an erroneous BFI when used with fault detector 50BF
- Can alarm on CTRL time out
- CTRL always greater than 62-2

Breaker Failure Logic – BFI Seal-In

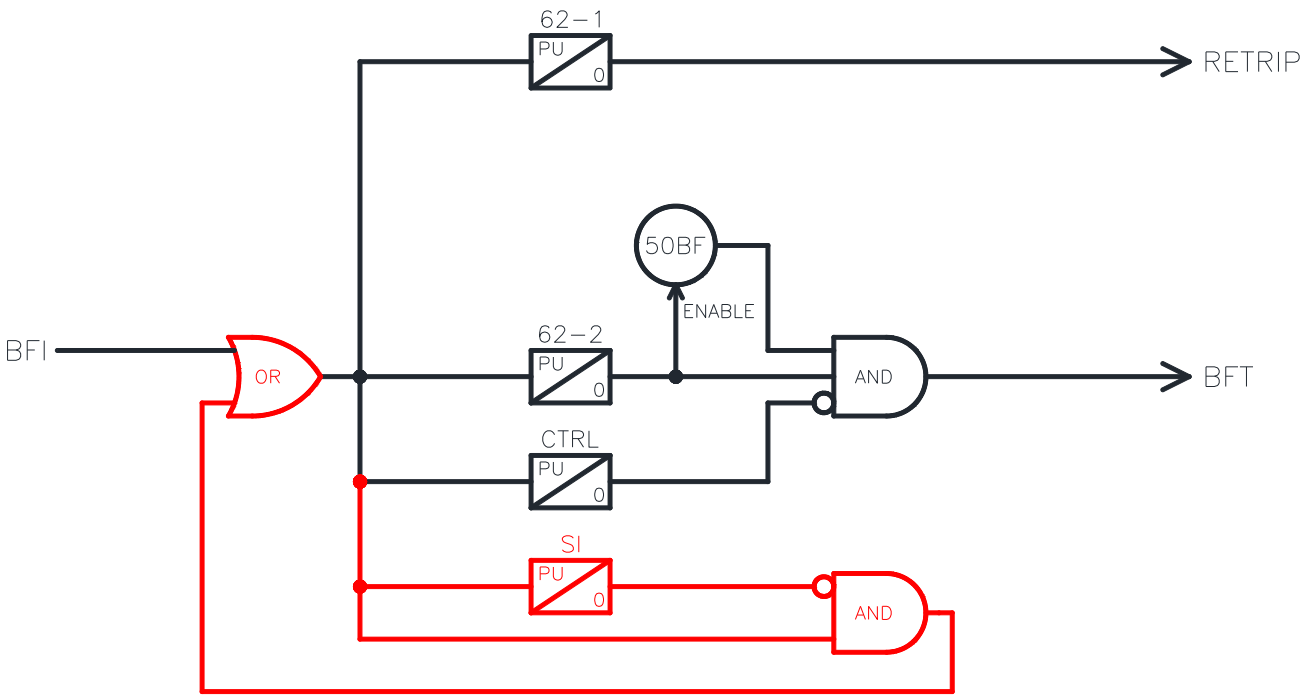

BFI Seal-In may be necessary when the BFI signal is momentary

- Can only be used when there is a BFI Control Timer (CTRL)
- May conflict with retrip strategy

Breaker Failure Logic – Minimal Current Scheme

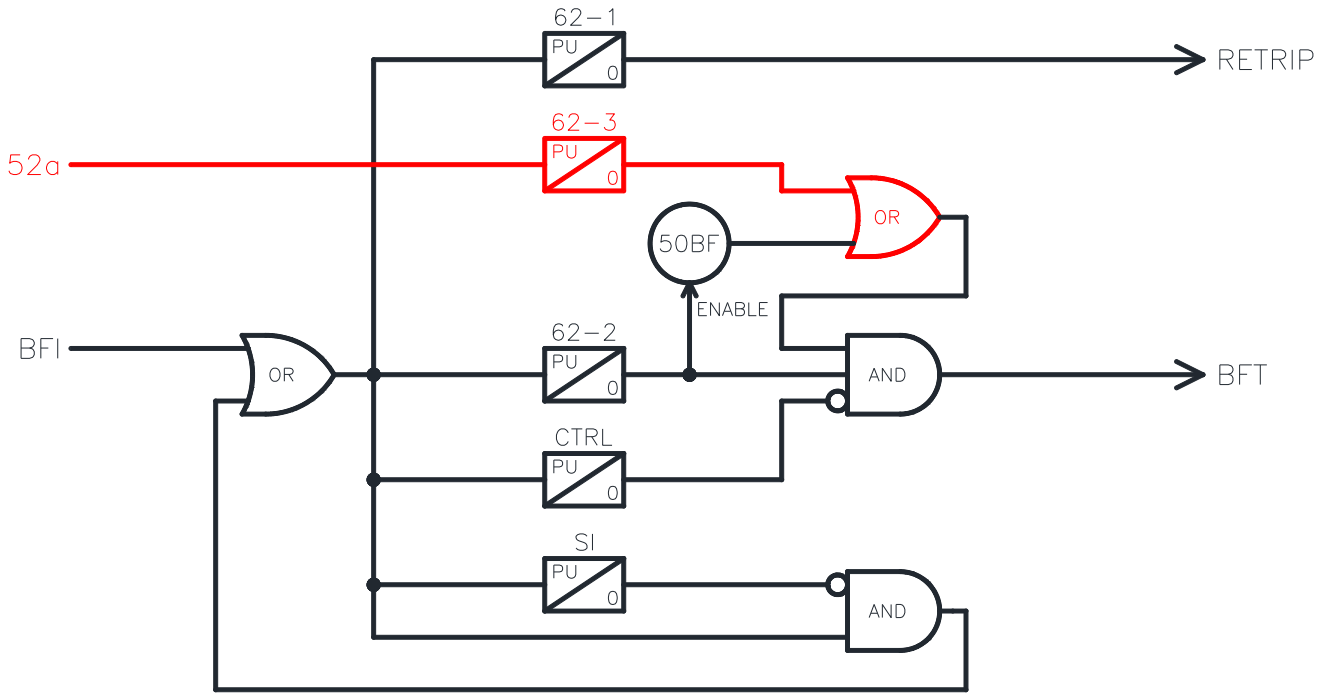

"a-finger breaker fail"

- Examples: Transformer Sudden Pressure Trip; Generator Inadvertent Energization

Relay Techs Beware! These schemes commonly make relay techs famous!

Breaker Failure Logic – Timer Bypass Scheme

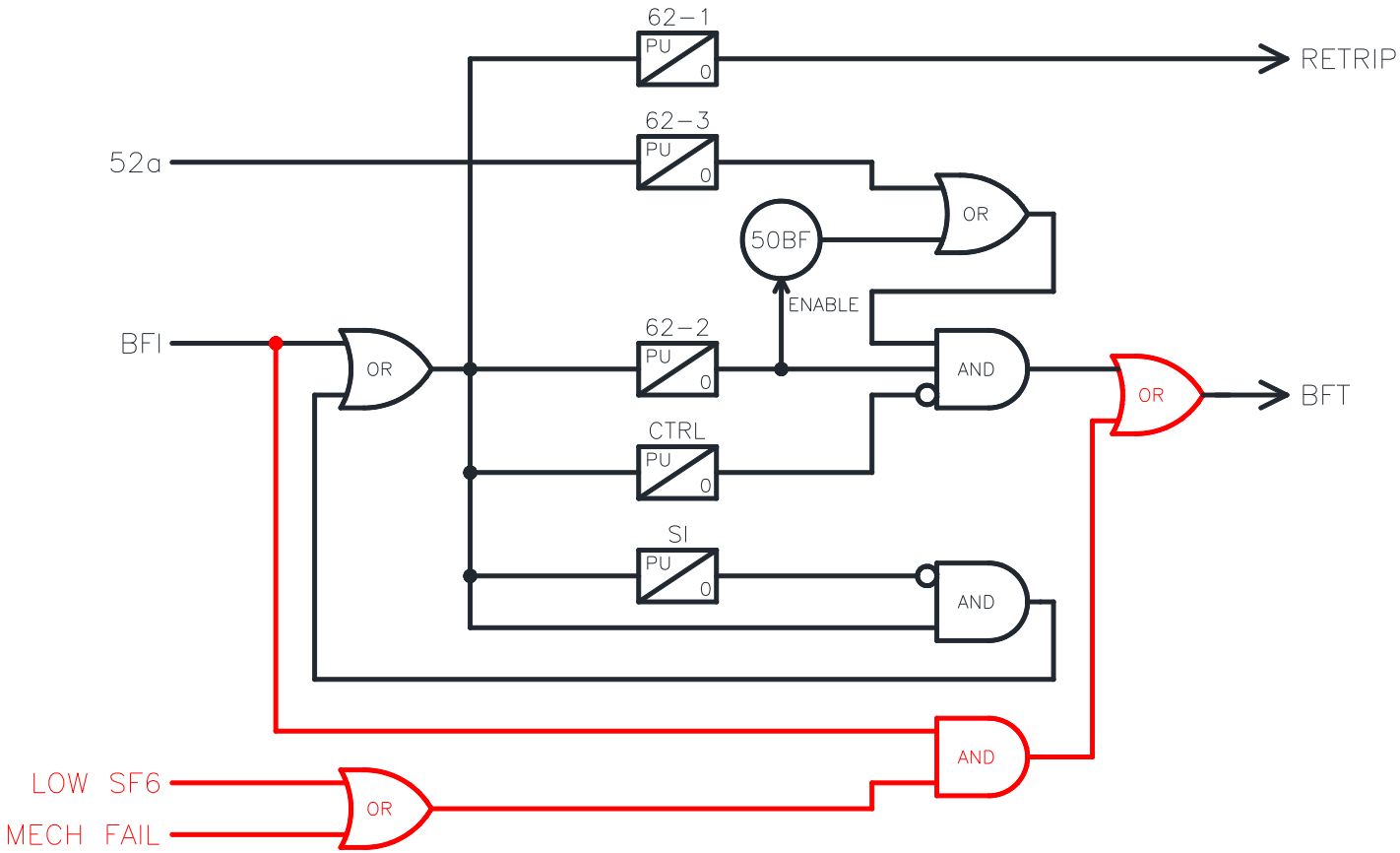

Note: This logic is for illustrative purposes only. Not intended as a complete scheme. The timer bypass scheme should be supervised by a fault detector, which may not be compatible with torque controlled 50BF.

Breaker Failure Logic – Dual Timer Schemes

Use fast BF timer for multi-phase faults (L-L, L-L-G, 3P)

Use slower BF timer for single-phase faults (SLG)

Multi-phase faults have larger impact on system stability and may require fast breaker failure times.

But Single-phase faults are more common.

Dual timer allows fast BFT for the multi-phase fault,
but keeps the security of a slower BFT for the most common fault .

Special Schemes

Voltage differential

Frame leakage detection

Breaker differential

IPO breakers

Redundant breakers

Outline

- Protection System Failures and Breaker Failures
- BF Protection versus BF Relaying
- BF Relay Schemes and Logic
- Special BF Situations
- BF Settings and Timing
- Impacts from Changing Technology
- Testing and Maintenance of BF Schemes

Breaker Failure Relay Settings

Logic

Fault or Load Current Detector Pickup

Other Breaker Failure Detectors

Set Timers

Calculating Breaker Failure Timers

Normal Operation (above the axis)

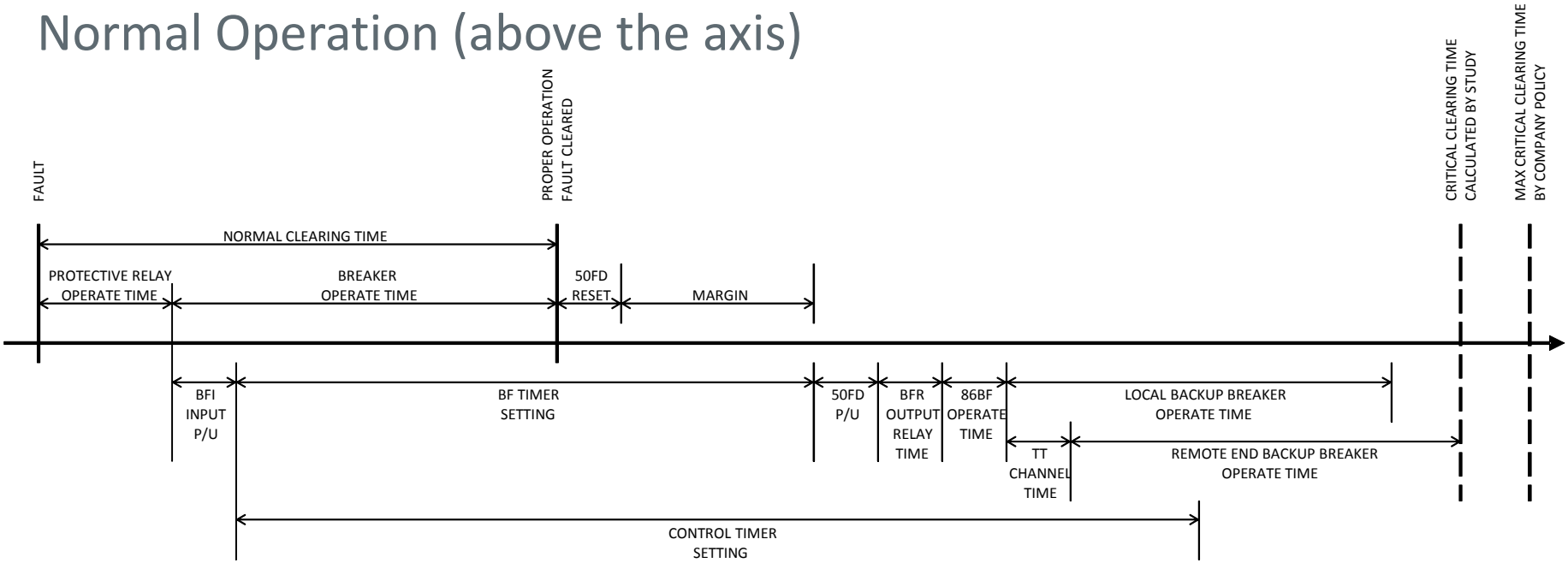

Breaker Failure Operation (below the axis)

Calculating Breaker Failure Timers

Normal Operation (above the axis)

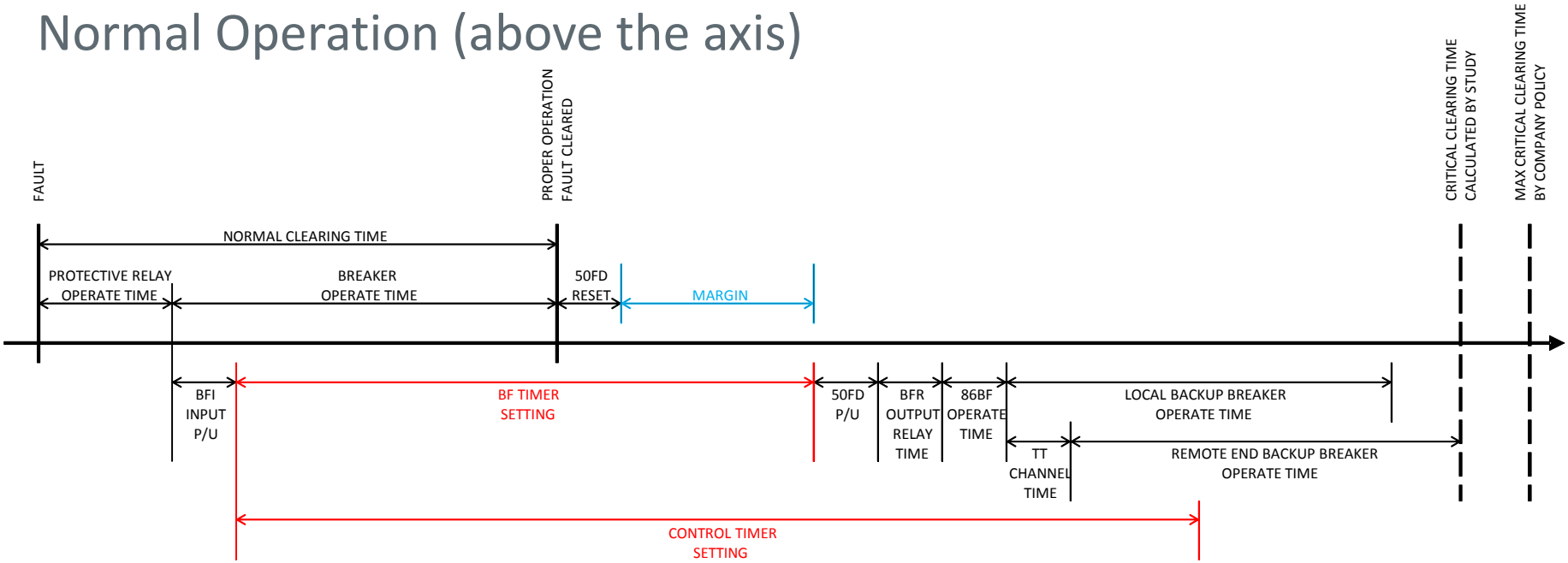

Breaker Failure Operation (below the axis)

Outline

- Protection System Failures and Breaker Failures
- BF Protection versus BF Relaying
- BF Relay Schemes and Logic
- Special BF Situations
- BF Settings and Timing
- Impacts from Changing Technology
- Testing and Maintenance of BF Schemes

Impact of Changing Technology

Digital Relay BF Protection: Faster, Better, Cheaper, More

- Solved transient stability problems previously unsolvable
- Better protection against wide-area and cascading outages
- Protect against all breaker failure modes, not just one or two
- Can be more secure if designed well

Most utilities moving away from Stand-Alone BF Relays

- Some utilities (not many) are reversing the trend and going back to stand alone Breaker Failure Relays
  - Reduce ~~misoperations~~ “unscheduled maintenance tests”
  - Use longer maintenance cycles for BF protection systems

Impact of Changing Technology

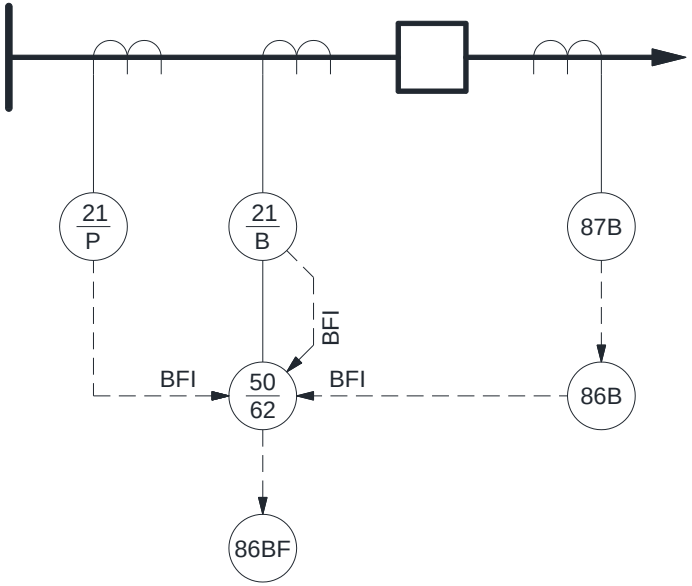

Impact of Changing Technology

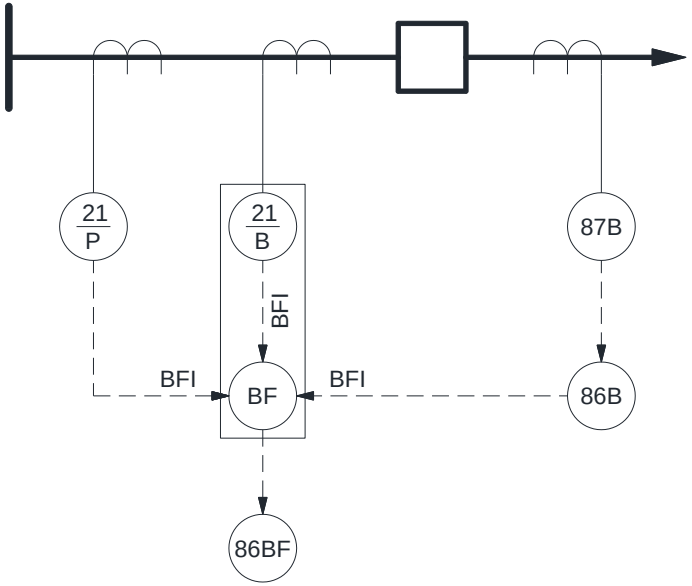

Impact of Changing Technology

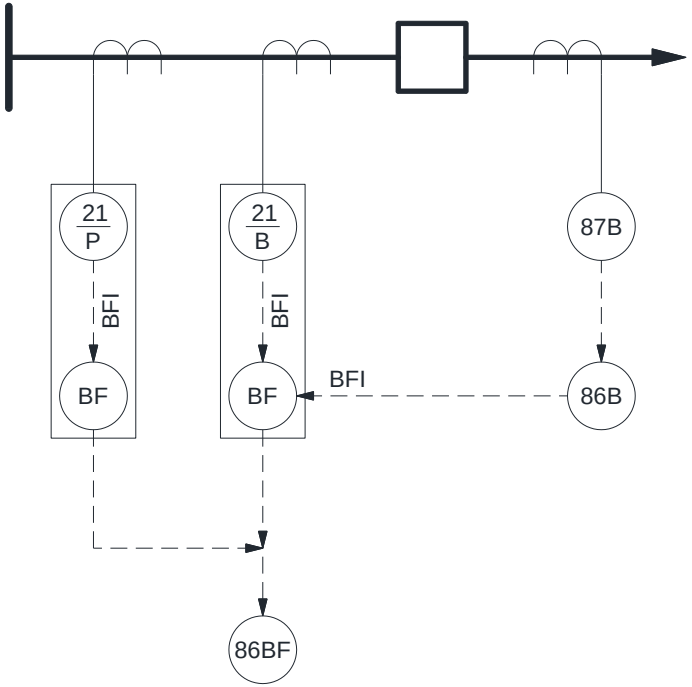

Impact of Changing Technology

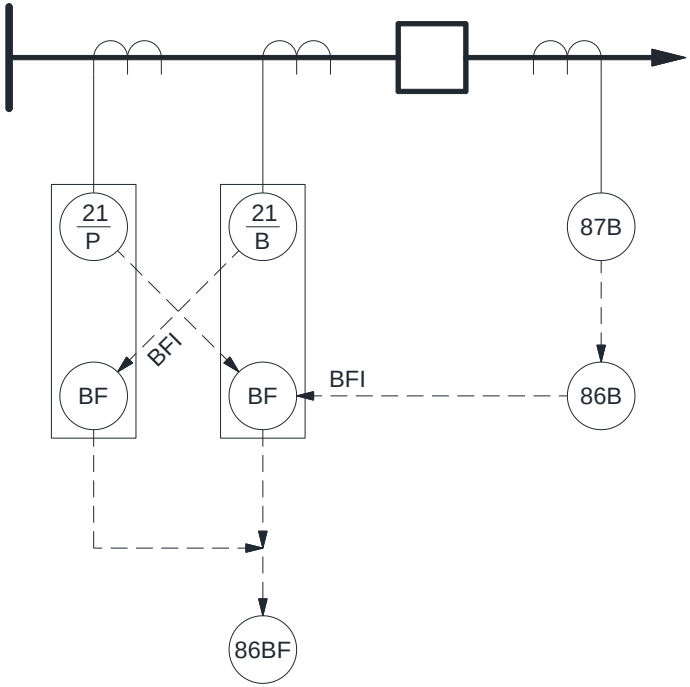

Impact of Changing Technology

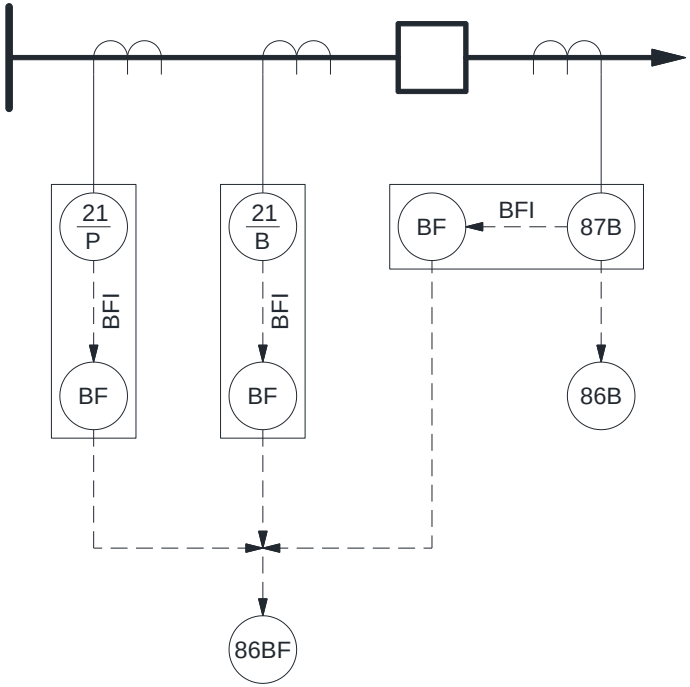

Impact of Changing Technology

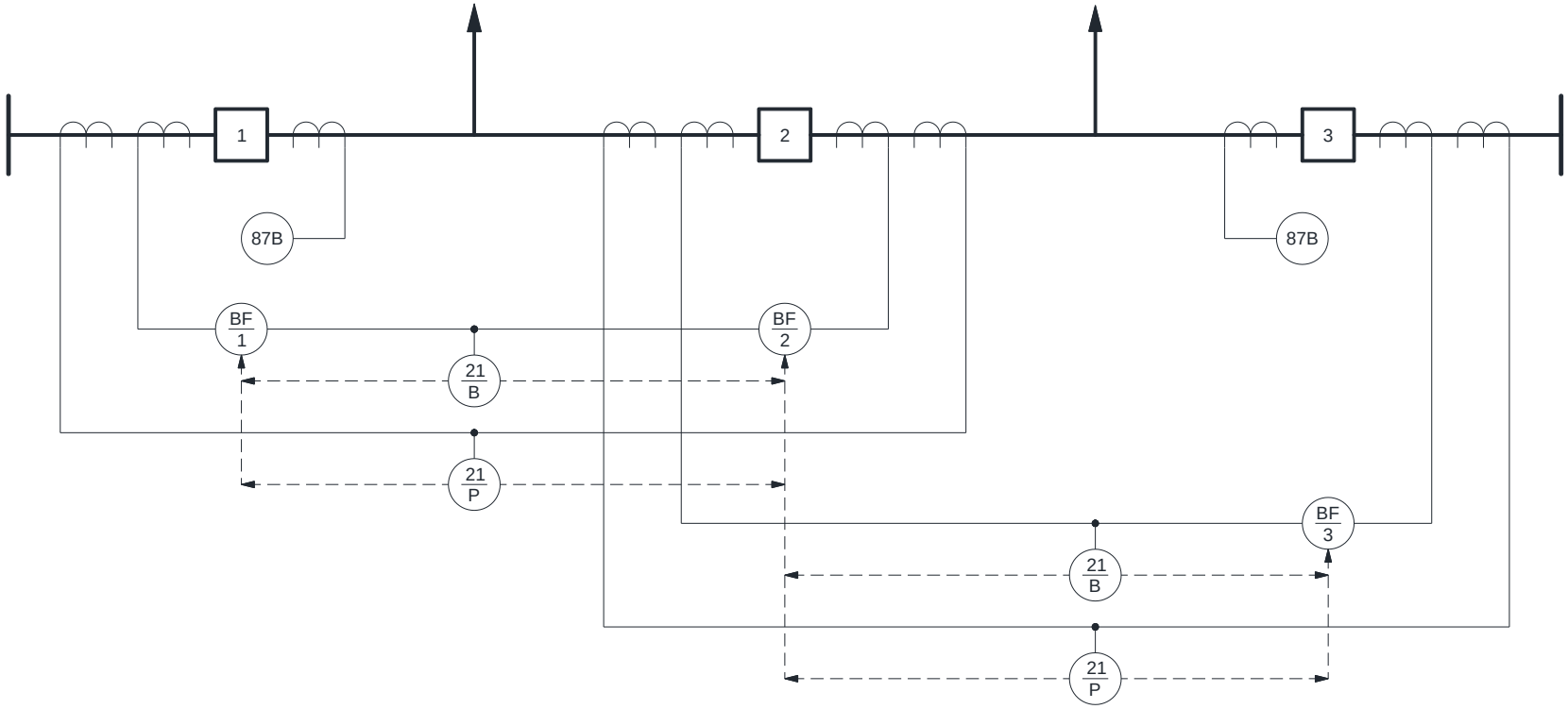

Impact of Changing Technology

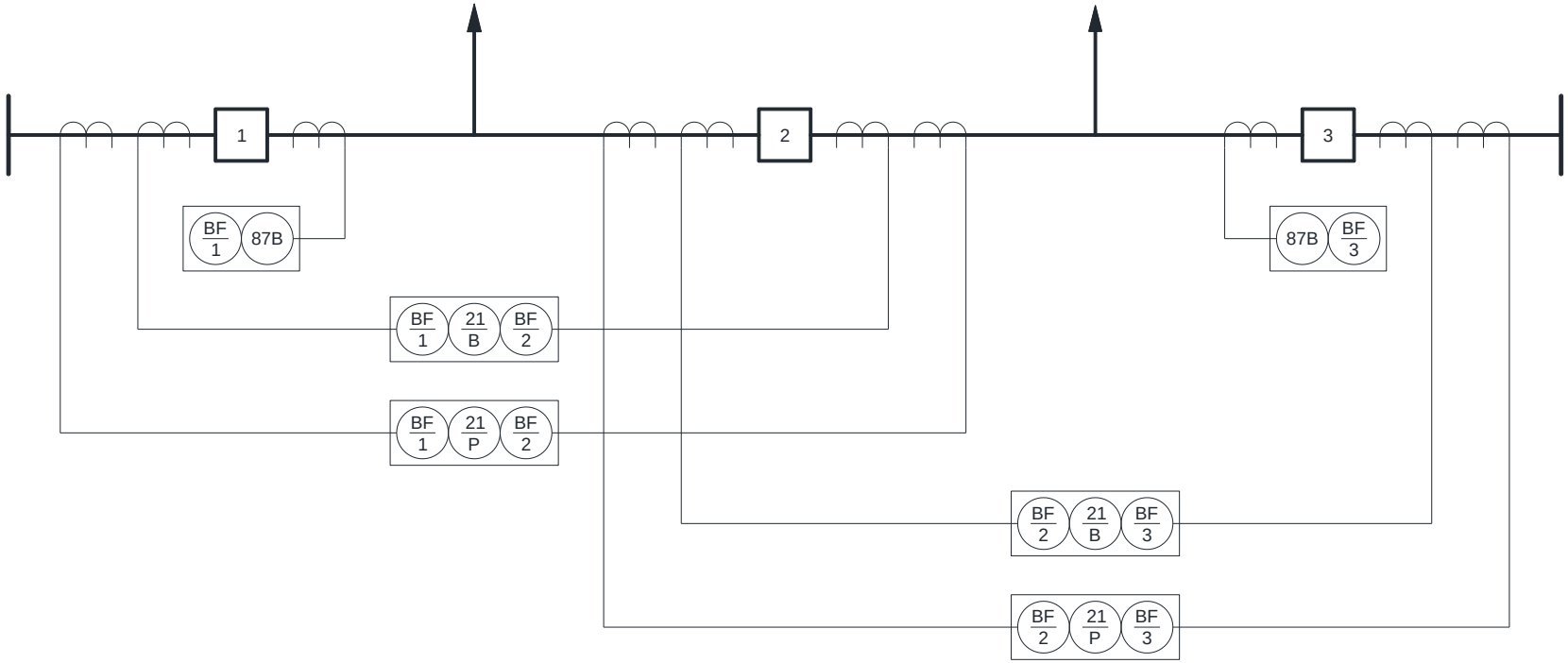

Impact of Changing Technology

Digital Relay Timing and Logic

- Precise timing eliminates relay misoperations due to calibration drift
- Precise timing and logic allows reducing “design margins”

Digital Relay I/O

- Sensitive BFI inputs (transients, DC grounds)
- Solid state relay outputs (sneak circuits)

Digital Relay Protective Elements

- Used to be limited to a 50FD (fault detector)
- Now we can use 50L and other sensitive detectors that may pick up a lot
- *Solution: Consider using other elements to help add Security, not just Sensitivity (negative sequence, voltage elements, synch check and frequency elements, etc.)*

Impact of Changing Technology

Challenges from Complexity

- Elaborate/exotic BF logic
- Wide variety of BF schemes, even in the same model of relay at the same utility
- May have more than one BF scheme in a single relay
- May have more than one BF scheme for single breaker
- *Solution: Engineering Standardization*
- *Solution: Documentation (written setting descriptions, logic diagrams, and test plans)*

Challenges with Integrated BF

- May not be able to disable all BFI's
- May not be able to disable all BFT's
- Trend is to completely eliminate all hardwired BFT and lockout relays (IEC 61850)
- *Solution: Design with test switch to relay input that disables the BFI and/or BFT. Especially important for BFTT or 61850.*

Outline

- Protection System Failures and Breaker Failures
- BF Protection versus BF Relaying
- BF Relay Schemes and Logic
- Special BF Situations
- BF Settings and Timing
- Impacts from Changing Technology
- Testing and Maintenance of BF Schemes

Testing and Maintenance of BF Protection

Challenges with BF Protection

- Difficult to test intentionally
- Easy to test unintentionally

Testing and Maintenance of BF Protection

Many utilities perform maintenance testing of the *BF Relay*, but are not testing the entire *Breaker Failure Protection System*

Good maintenance practices (*and NERC compliance requirements*) are to test the *Protection System*:

- Maintenance program for the BF Relay
- Maintenance program for CTs/PTs
- Maintenance program for the Battery and DC system
- Maintenance of the BF Protection System *must include*:
  - Rolling lockout relays and tripping breakers
  - Best practice: simultaneous functional test (clear the bus)
  - Typical practice: send in the new guy to check the BF relay, and you'll probably get a complete functional test!

Thank You

Brent Carper, PE

Engineering Manager – Relay Application Innovation, Inc.
Adjunct Professor – Washington State University
Brent.C@RelayApplication.com

509-334-9138

Relay Application Innovation, Inc.

Washington State University