CityLink Tulla Widening – Bulla Road Bridge Modification

Dr. Kabir Patoary | Principal Engineer – Bridges | GHD

Introduction | Presentation outline

- Project Background
- Existing Bridge Details
- Proposed Upgrade Works
- Major Constraints
- Construction Sequence
- Movement Monitoring
- Conclusions

Introduction | Project Background

- 2 packages of work
  - Melbourne Airport to Bulla Road
    - Funded by Federal and State Government
    - Delivered by VicRoads
    - Approx. length of 8 kM
  - Bulla Road to Power Street (CTW - this project)
    - Funded and delivered by Transurban
    - Approx. length of 16 kM

- One extra lane in each direction
- Contract Awarded May 2015
- Expected Completion by end 2017
- Total capital cost ~$1.28 billion for both packages

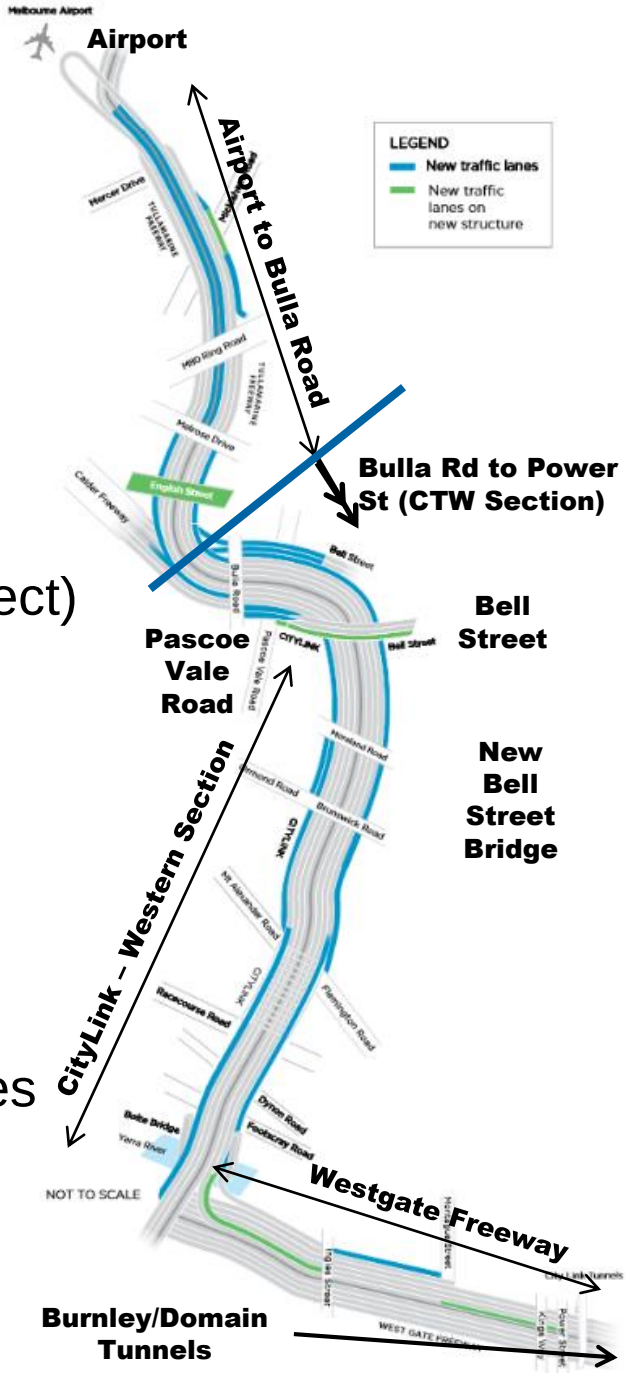

Introduction | Project Background

• Client	Transurban
• Contractor	CPB – Design &Construct Partner
• Main Consultants	Aurecon-GHD Joint Venture (AGJV)
• Other Consultants	Doulgas Partners (geotechnical)
	SLR (Noise Modelling)
	KBR (Proof Engineering)
	PowerPlant (Lighting Design)
	Hassel (Urban and Architectural)
	Visionstream (ITS)
	Davis Langdon & AECOM (IR)

Introduction | Existing Bulla Road Bridge

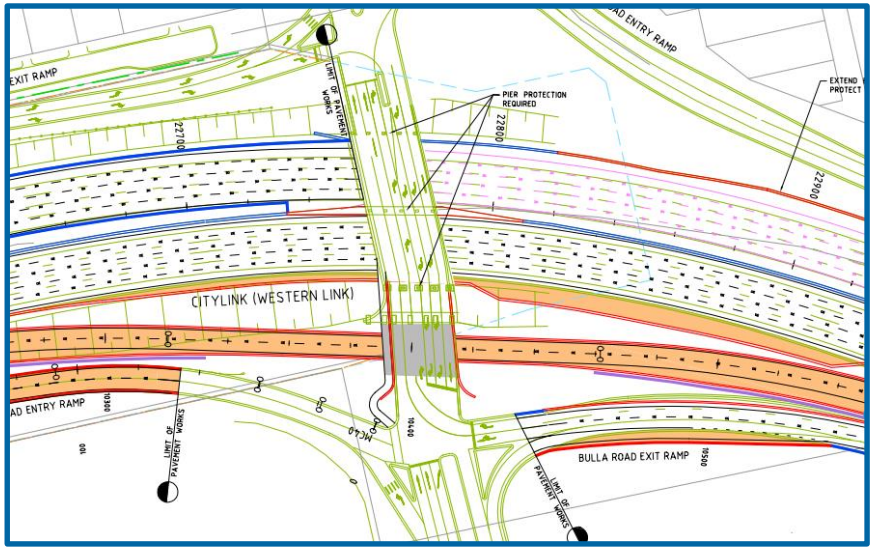

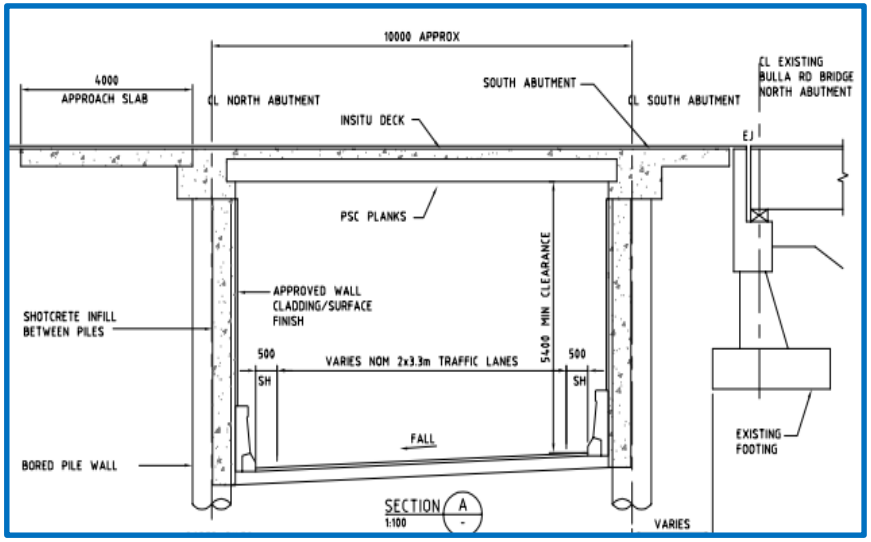

Introduction | Existing Bulla Road Bridge

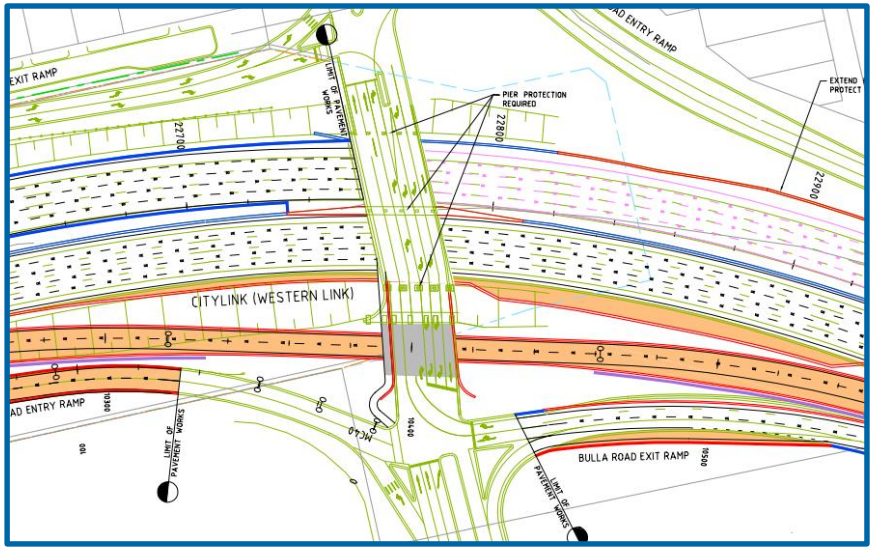

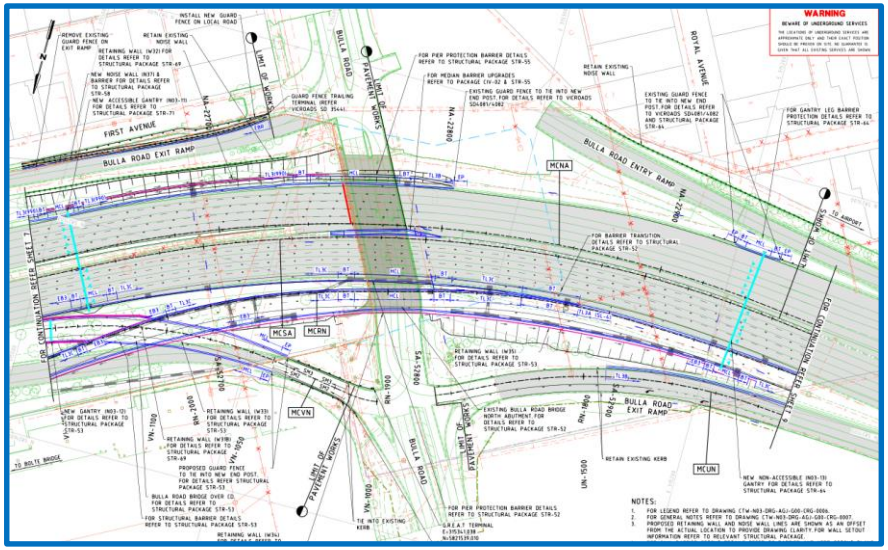

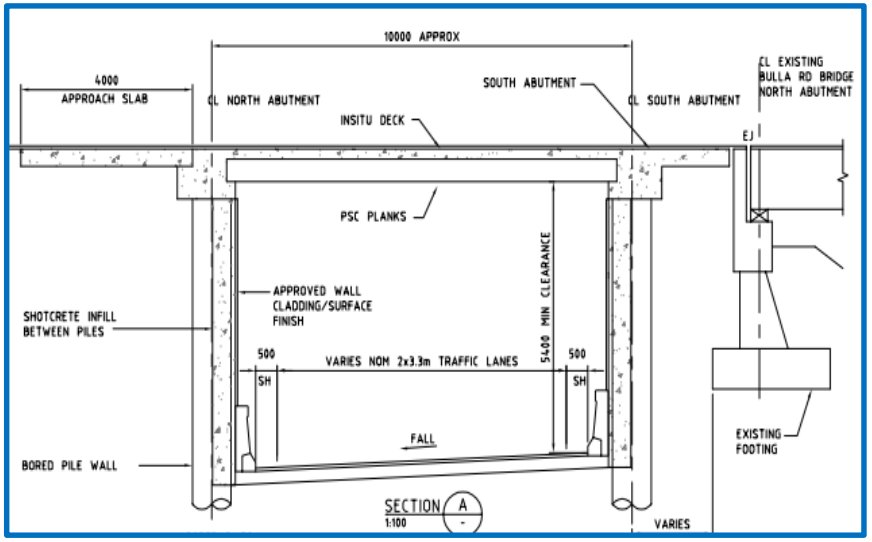

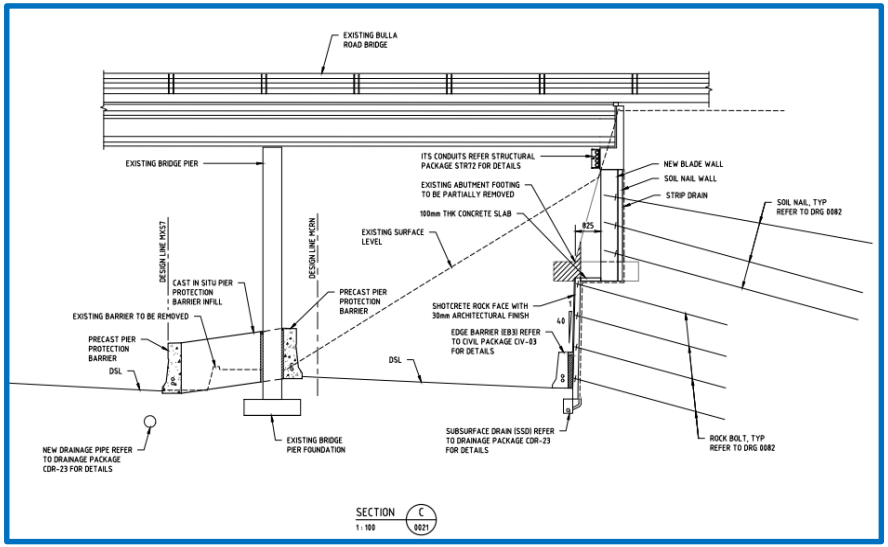

REFERENCE DESIGN

ALTERNATE DESIGN

Introduction | Existing Bulla Road Bridge

- Constructed in 1968
- Four span (11.3m+25.9m+25.9m+9.15m) continuous I girder Bridge composite with deck

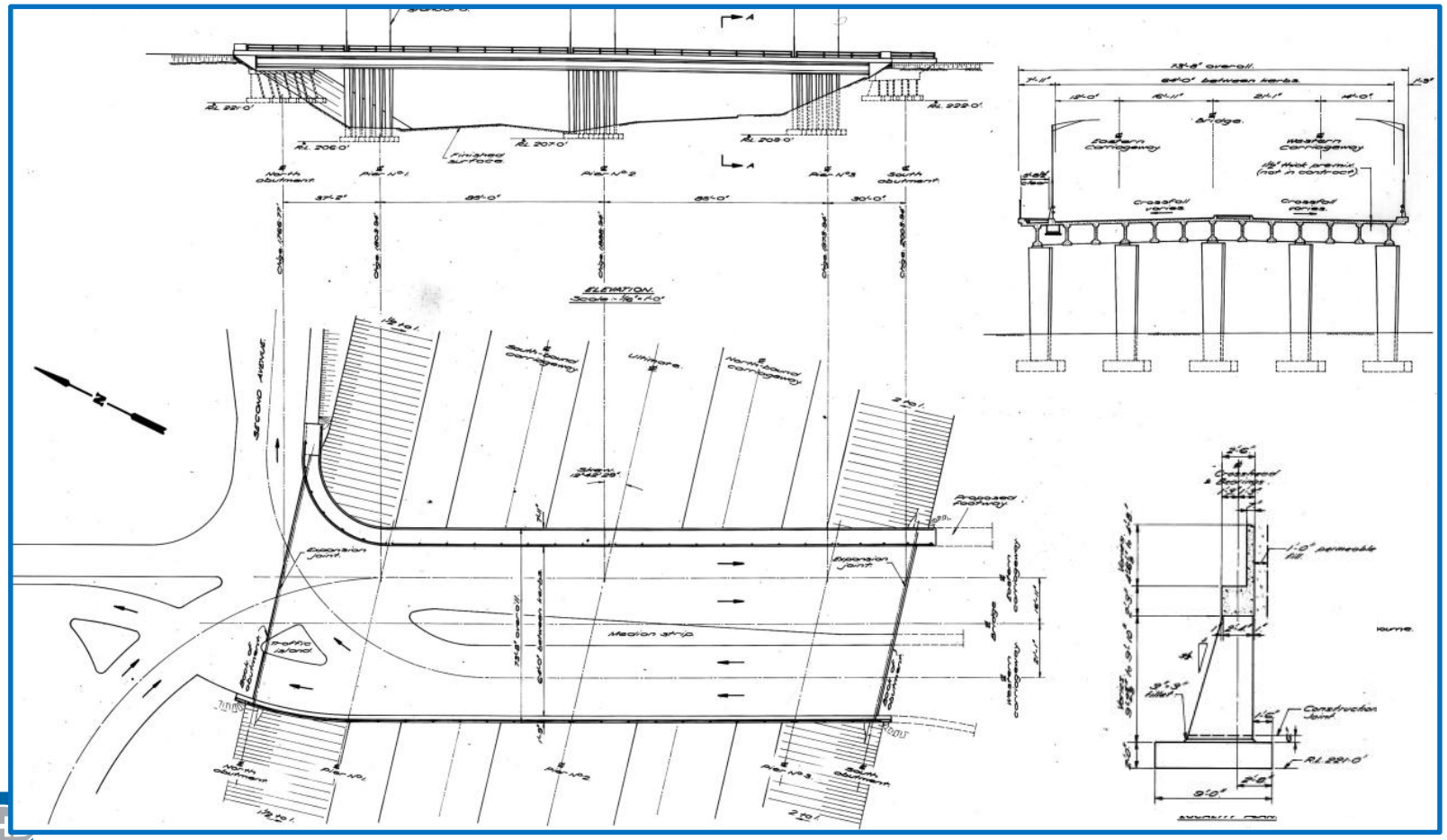

Introduction | Existing Bulla Road Bridge

- Discrete Abutment support on Counterfort Wall
- Counterfort Wall supported on Decomposed Basalt

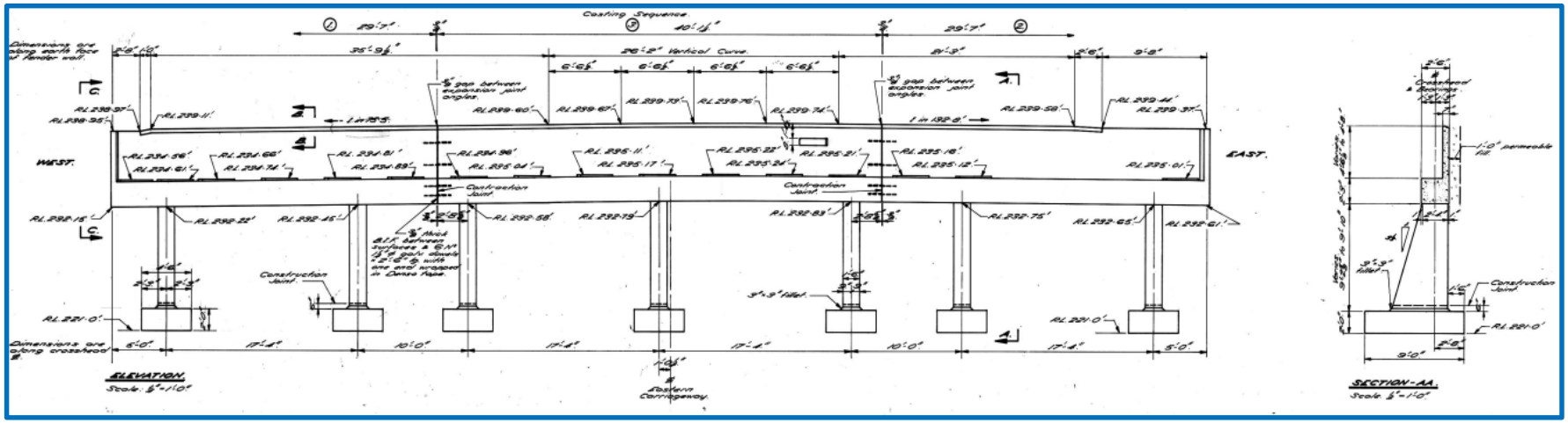

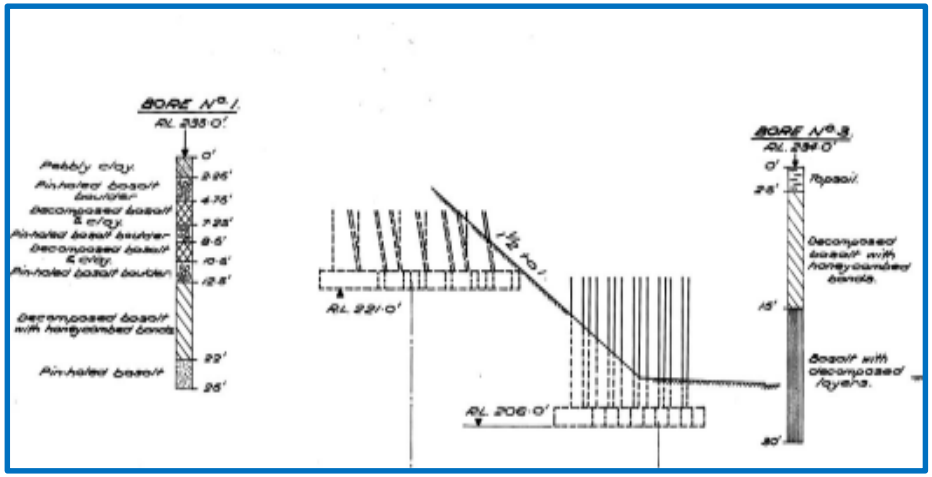

Introduction | Proposed Modification

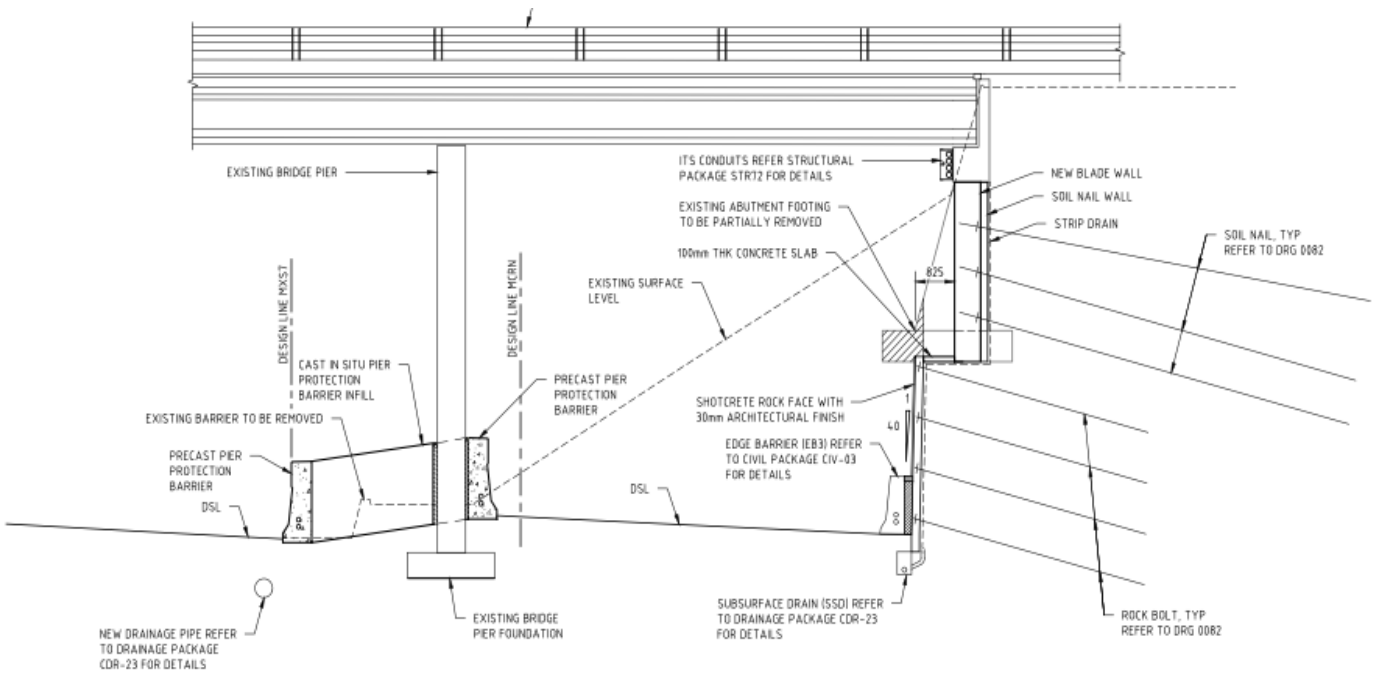

Major Constraints

- The fill at the back of the existing abutment requires careful assessment before the construction of soil nail wall due to no approach slab on bridge approach above.
- Space constraint under the north abutment due to low headroom from existing I girder and the existing batter slope.
- Part of the existing reinforced concrete buttress walls and footings must be cut off, removed and grouted.

Introduction | Proposed Modification

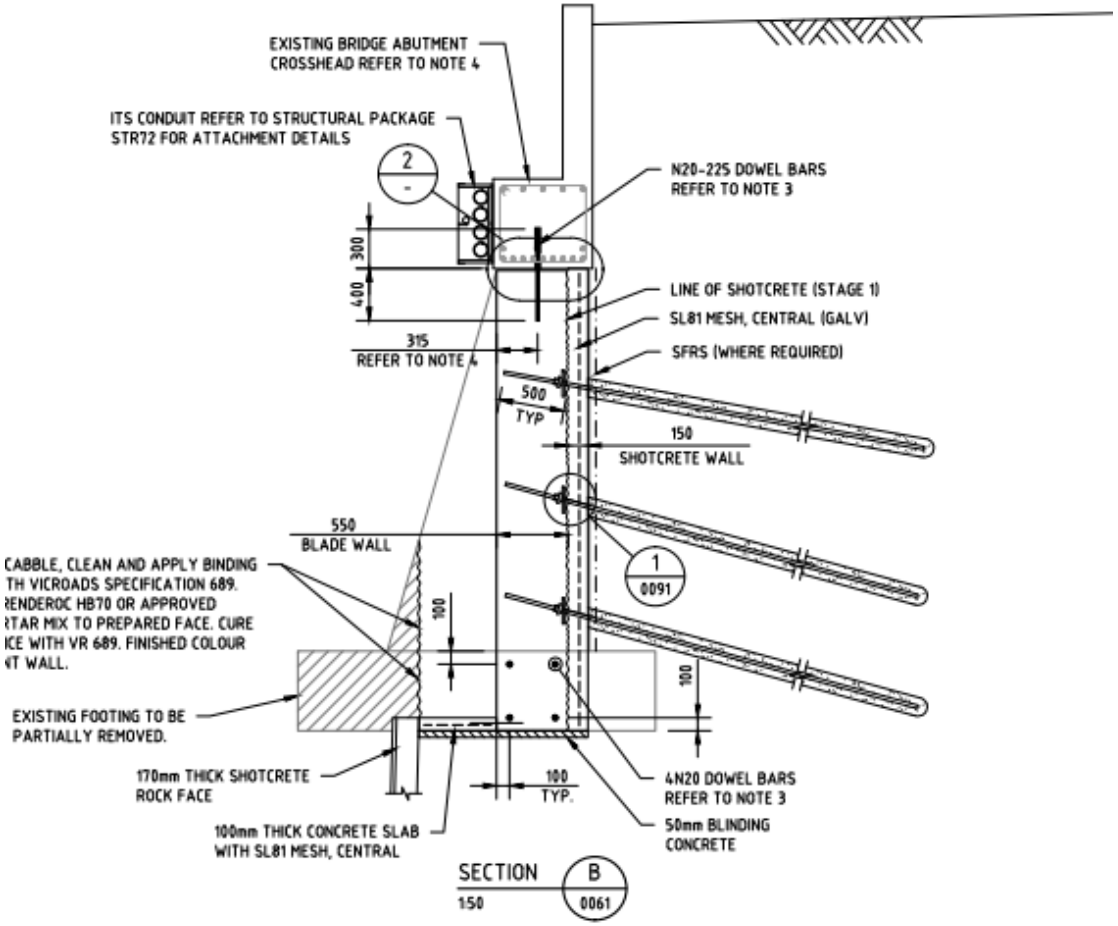

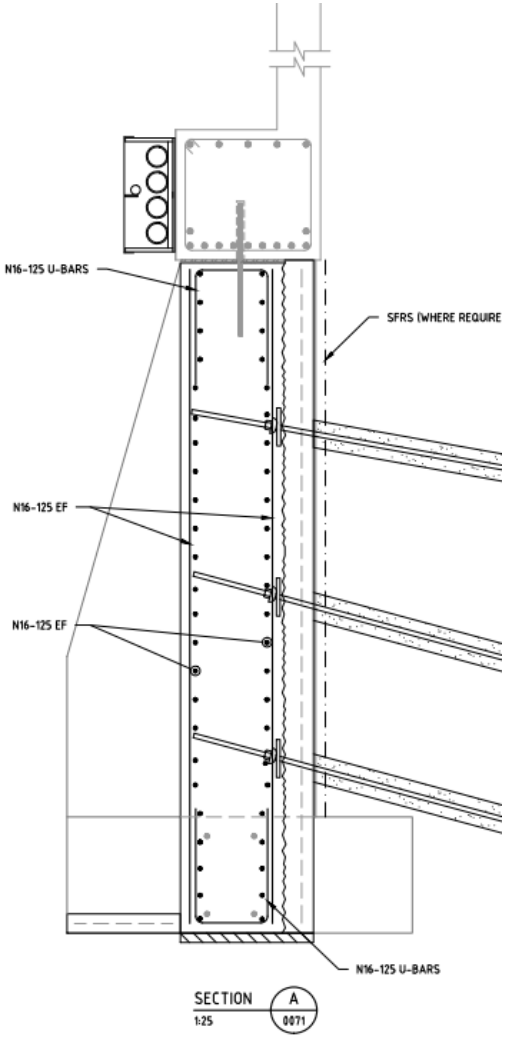

Introduction | Proposed Modification

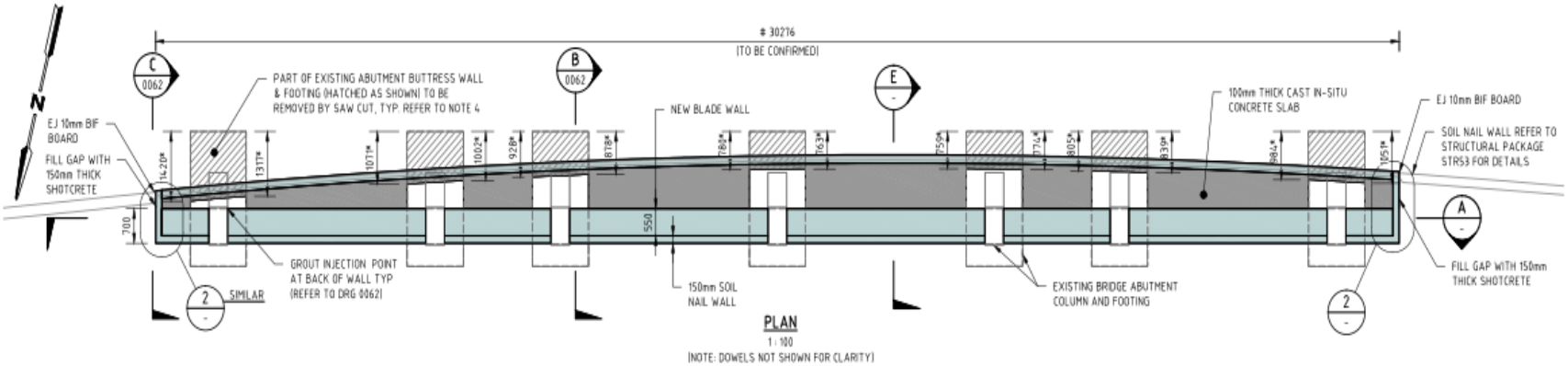

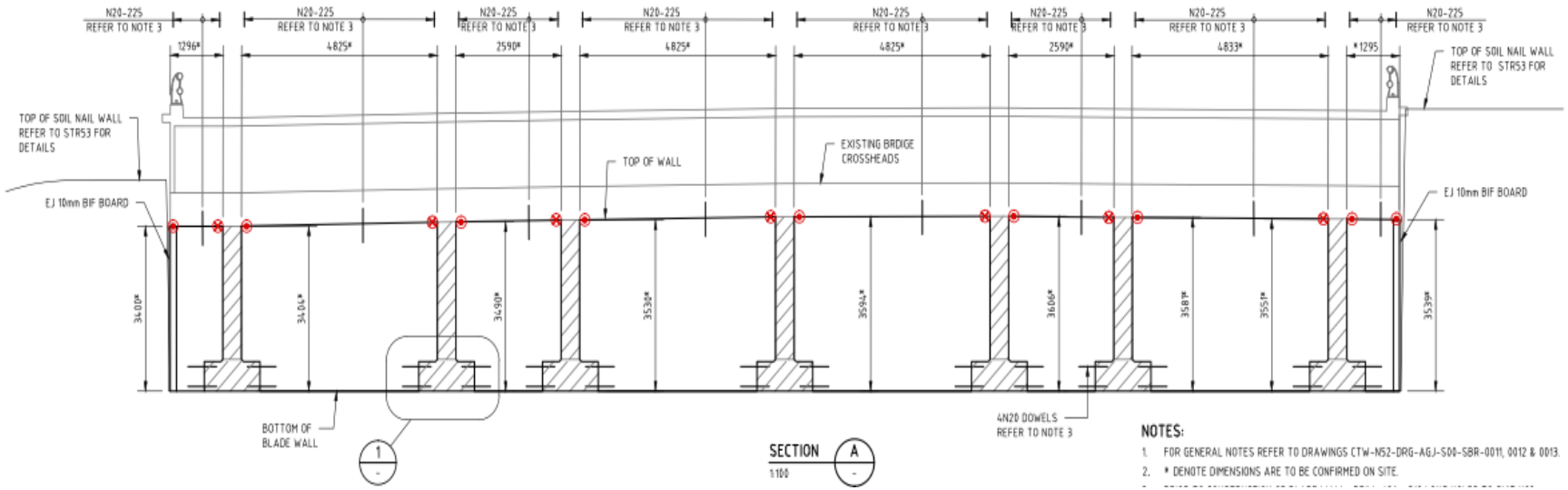

Introduction | Proposed Modification

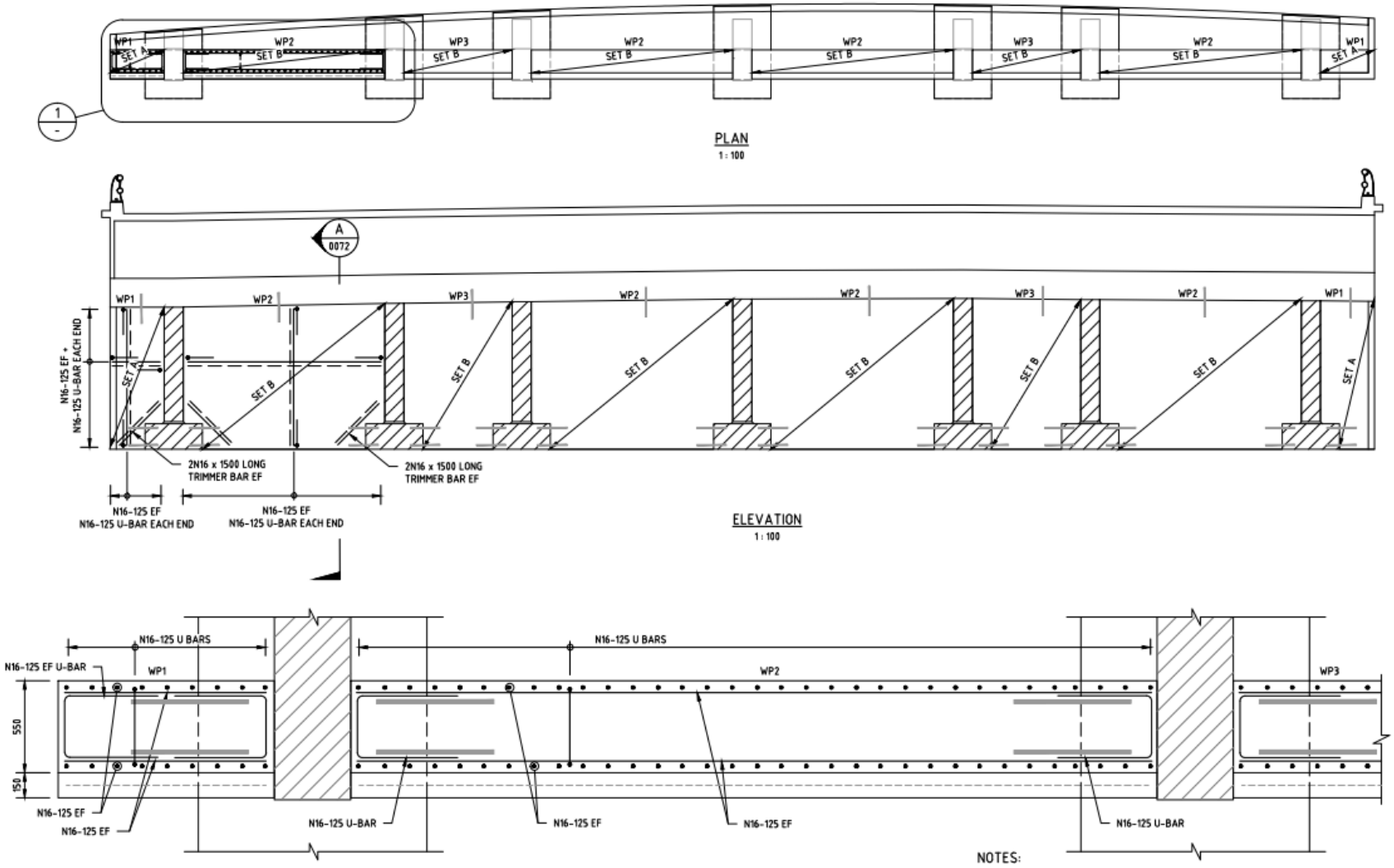

Introduction | Construction Sequence

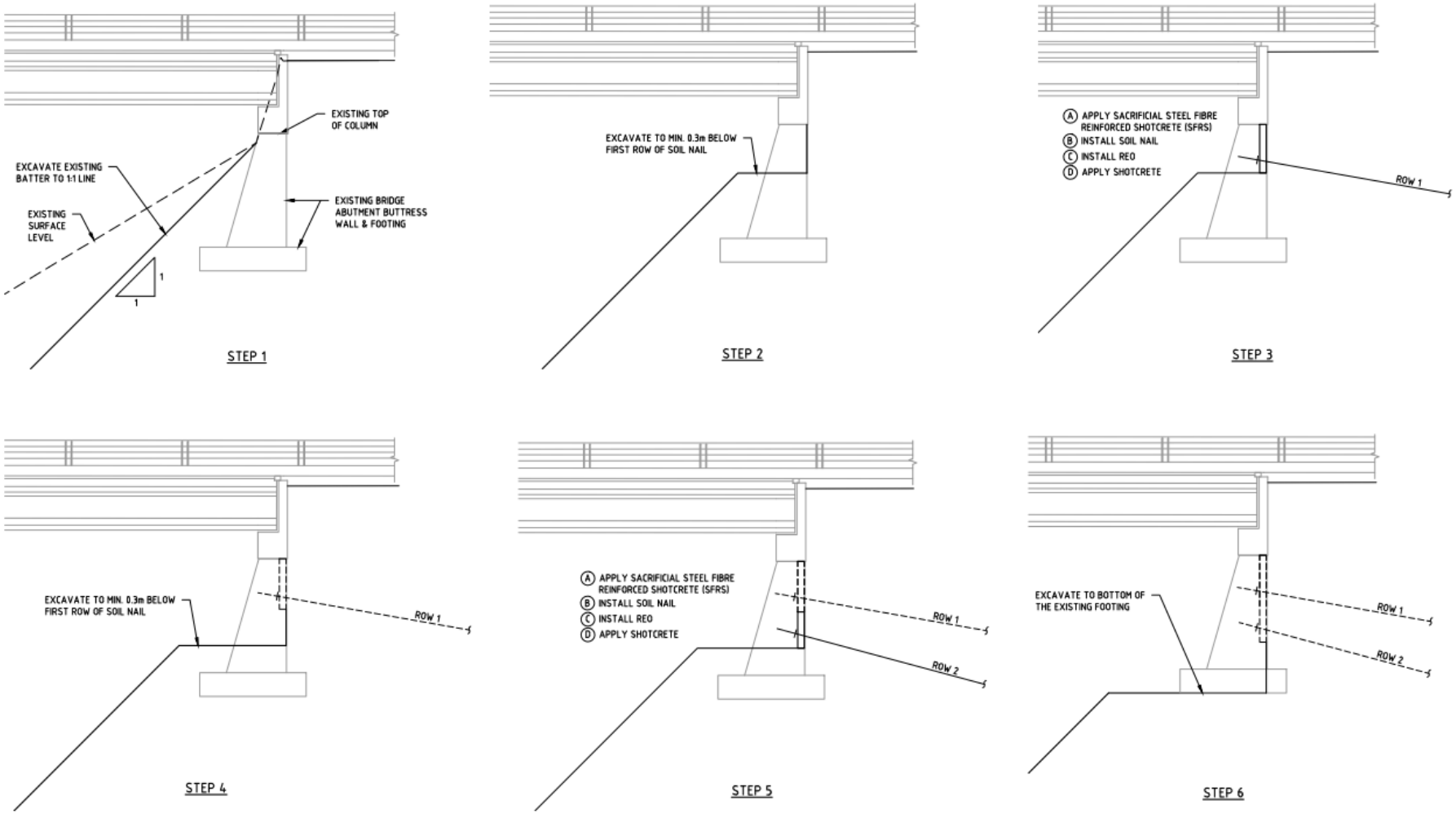

Introduction | Construction Sequence

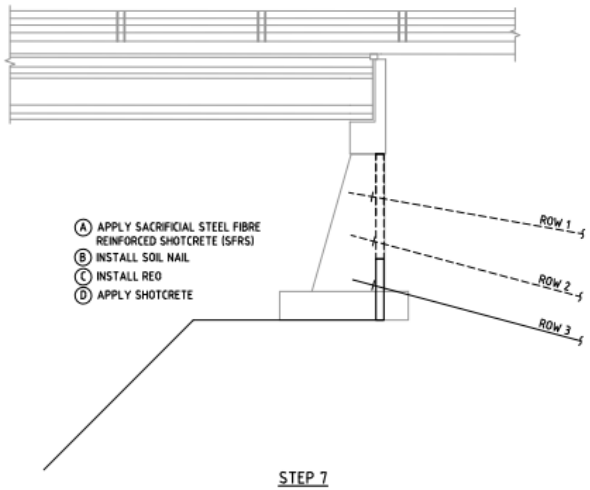

STEP 7

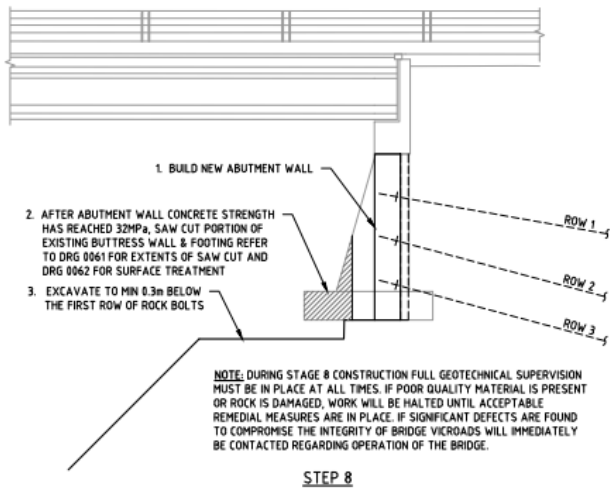

STEP 8

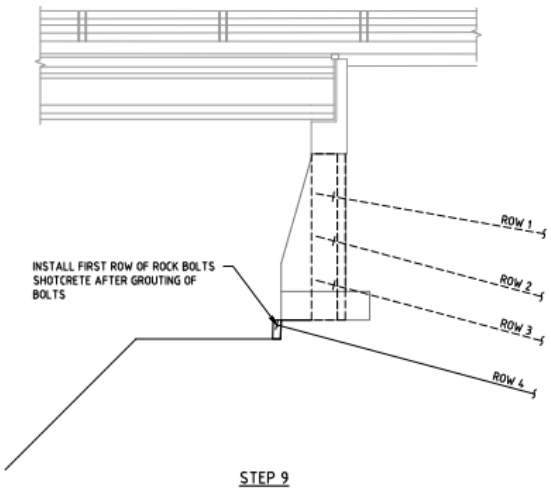

STEP 9

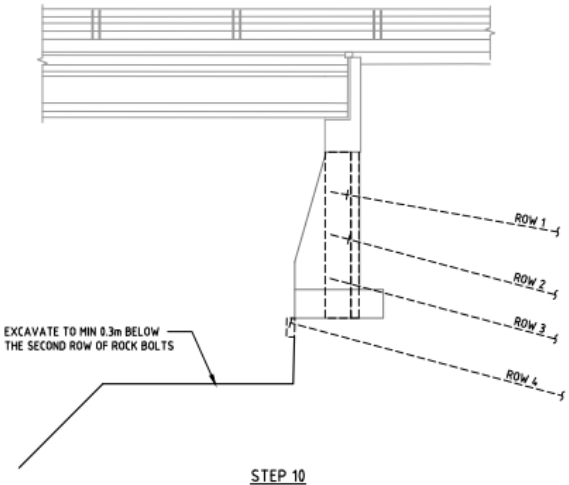

STEP 10

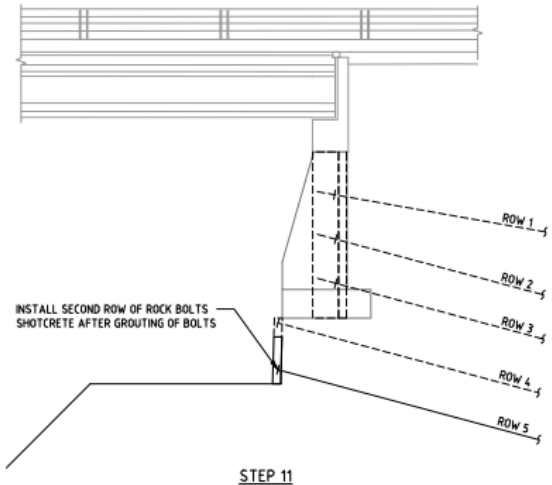

STEP 11

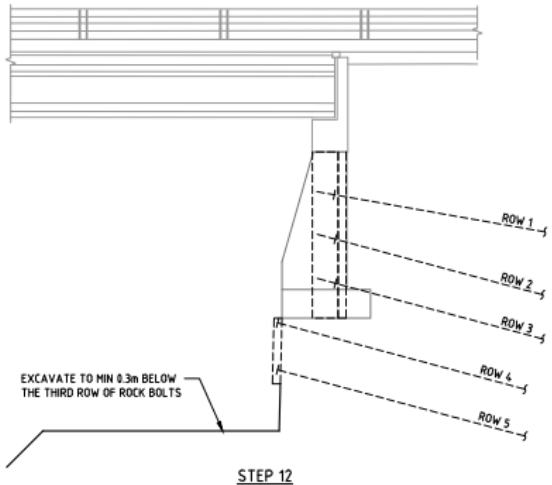

STEP 12

NOTES:

Introduction | Construction Sequence

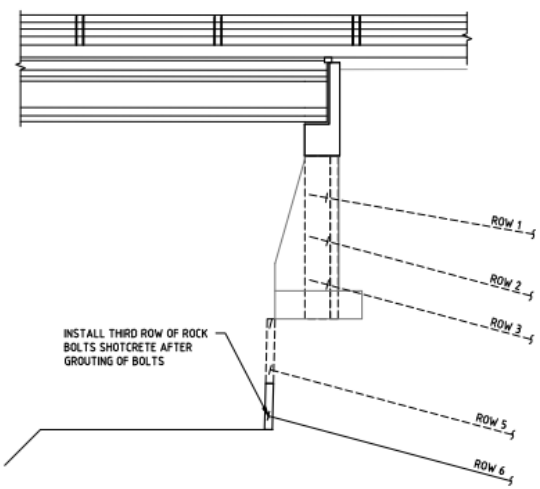

STEP 13

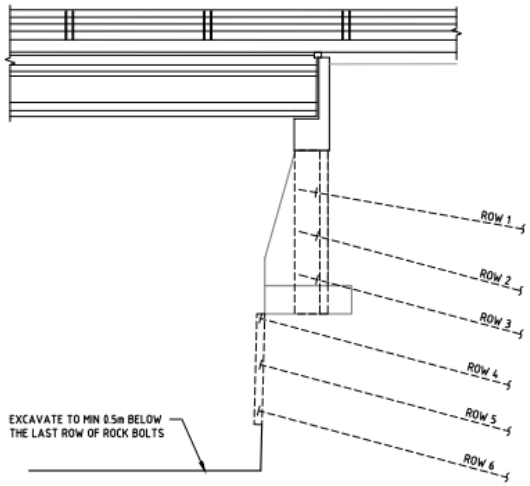

STEP 14

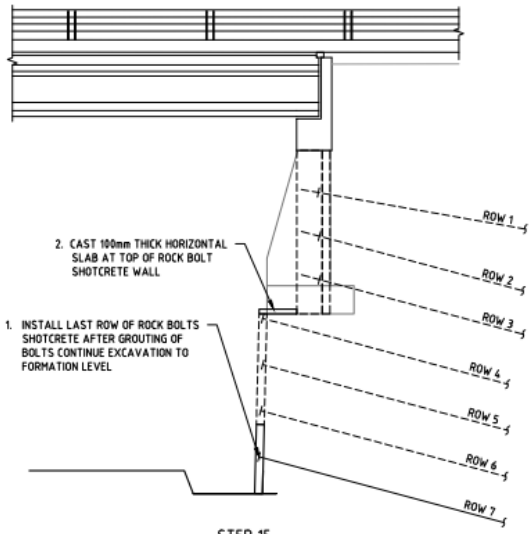

STEP 15

Introduction | Construction Sequence

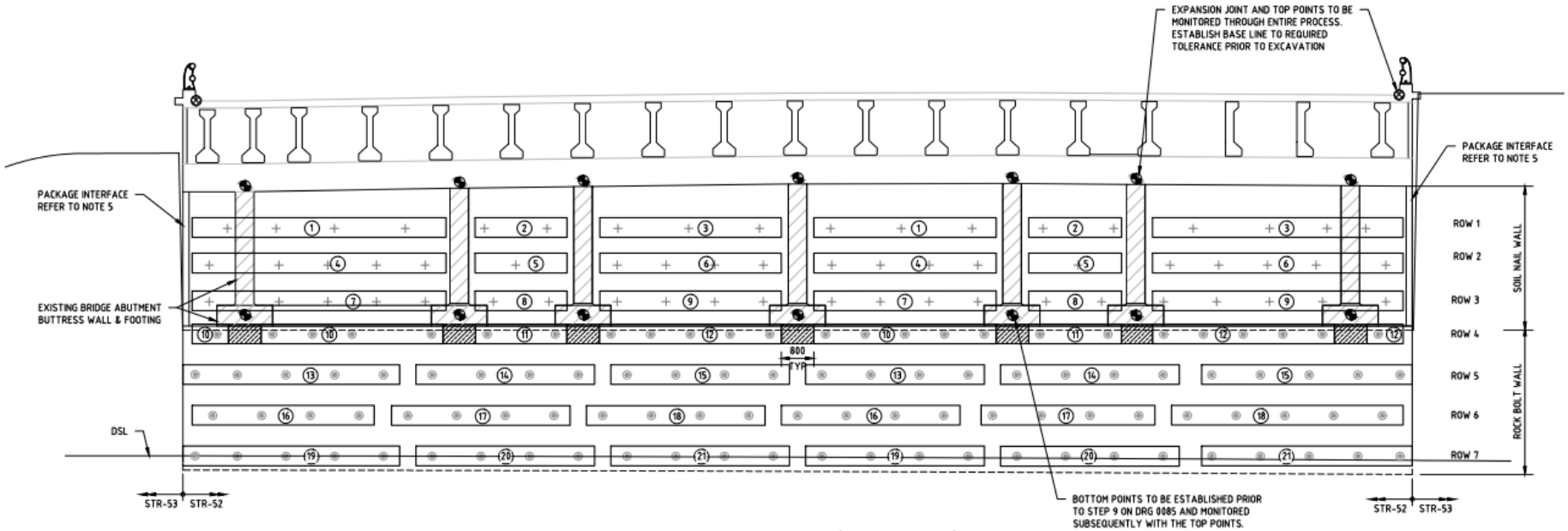

ELEVATION - SOIL NAIL (NORTH ABUTMENT)

SCALE 1:100

MONITORING:
ALL MONITORING DEVICES AS LISTED IN DRG 0016, 0019 & 0082 SHALL BE INSTALLED AND A MINIMUM OF TWO BASE LINE READINGS SHALL BE TAKEN PRIOR TO ANY EXCAVATION COMMENCES.

- ABUTMENT FACE MONITORING POINTS (TYP)
- EXPANSION JOINT MONITORING POINTS (REFER TO DRG 0082)

STAGE 1: CONSTRUCTION SEQUENCE ABOVE BASE OF FOOTING FOR SOIL NAILS

- EXCAVATE IN 'HIT ONE, MISS TWO SEQUENCE' SLOTS, IN NUMERICAL SEQUENCE (1) TO (9) TO FORM HORIZONTAL BENCHES FOR NAIL INSTALLATION
- BENCH LEVELS > 0.3m BELOW ROW OF NAILS
- APPLY ONE LAYER OF STEEL FIBRE REINFORCED SHOTCRETE (SFRS) (NOMINAL 50mm THICKNESS) WHERE LOOSE MATERIAL IS ENCOUNTERED IN EXPOSED/EXCAVATED FACE (REFER TO NOTE 7 ON DRG 0082)
- DRILL HOLES FOR SOIL NAILS, INSTALL & GROUT WITHIN EACH SEQUENTIAL AREA
- INSTALL ALL NAILS AND LOAD TEST NAILS ALONG ROW 1 PRIOR TO EXCAVATION FOR SUBSEQUENT BENCH LOWERING
- FIX REINFORCING MESH ON BAR CHAIRS TO MAINTAIN CORRECT COVER UNDER NAIL AND BOLT HEAD PLATES. SPRAY SHOTCRETE AFTER SOIL NAILS, REPEAT SEQUENCE TO ROW 2
- NOTE ROCK IS EXPECTED AT ROW 2 AND BELOW; LOW VIBRATION DRILLING METHODS TO BE ADOPTED (DIAMOND CORING) OR USE OF DOWNHOLE HAMMER (DHH) WITH APPROVAL OF GEOTECHNICAL ENGINEER. THIS MAY REQUIRE VIBRATION MONITORING TRIALS.
- EXCAVATION OF BASALT WILL REQUIRE VIBRATION FREE METHODS TO MINIMISE FRACTURING AND LOOSENING OF ROCK MASS UNDER EXISTING FOOTINGS
- EXCAVATION METHODS TO BE APPROVED BY GEOTECHNICAL ENGINEERS/AGJV/LCPL.

DO NOT EXCAVATE UNDER BUTTRESSES UNTIL SEQUENCE (13) - (15) (STEP 10 ON DRG 0085)

STAGE 2: CONSTRUCTION SEQUENCE BELOW TOP OF FOOTING FOR ROCK BOLTS

- SAW CUT EXISTING FOOTING AND PROVIDE CORROSION TREATMENT.
- EXCAVATE IN 'HIT ONE, MISS TWO SEQUENCE' SLOTS TO BASE OF FOOTING IN NUMERICAL SEQUENCE
- EXCAVATE NEXT BENCH BELOW FOOTING AND INSTALL ROCK BOLTS AS PER ABOVE SEQUENCE
- EXCAVATE LOWER BENCHES OVER MAX. 10m HORIZONTAL LENGTH AND INSTALL ROCK BOLTS
- EXCAVATION AT ABUTMENT TO BE UNDERTAKEN UNDER CONTINUOUS GEOTECHNICAL INSPECTION.

LEGEND
- SOIL NAIL
- ROCK BOLT

NOTES:

1. FOR SOIL NAIL GENERAL NOTES REFER TO DRAWINGS CTW-N52-DRG-AGJ-S00-SBR-0015 & 0016.
2. FOR ROCK NAIL GENERAL NOTES REFER TO DRAWINGS CTW-N52-DRG-AGJ-S00-SBR-0018 & 0019.
3. TEMPORARY BATTERS TO BE FORMED NO STEEPER THAN 1:1.
4. REFER TO DRAWING CTW-N52-DRG-AGJ-S00-SBR-0084 TO 0086 FOR CONSTRUCTION SEQUENCE.
5. COORDINATE STAGING OF EXCAVATION WITH STRUCTURAL PACKAGE STR-53 SEQUENCE.

0 1000 2000 3000mm

Introduction | Construction Sequence

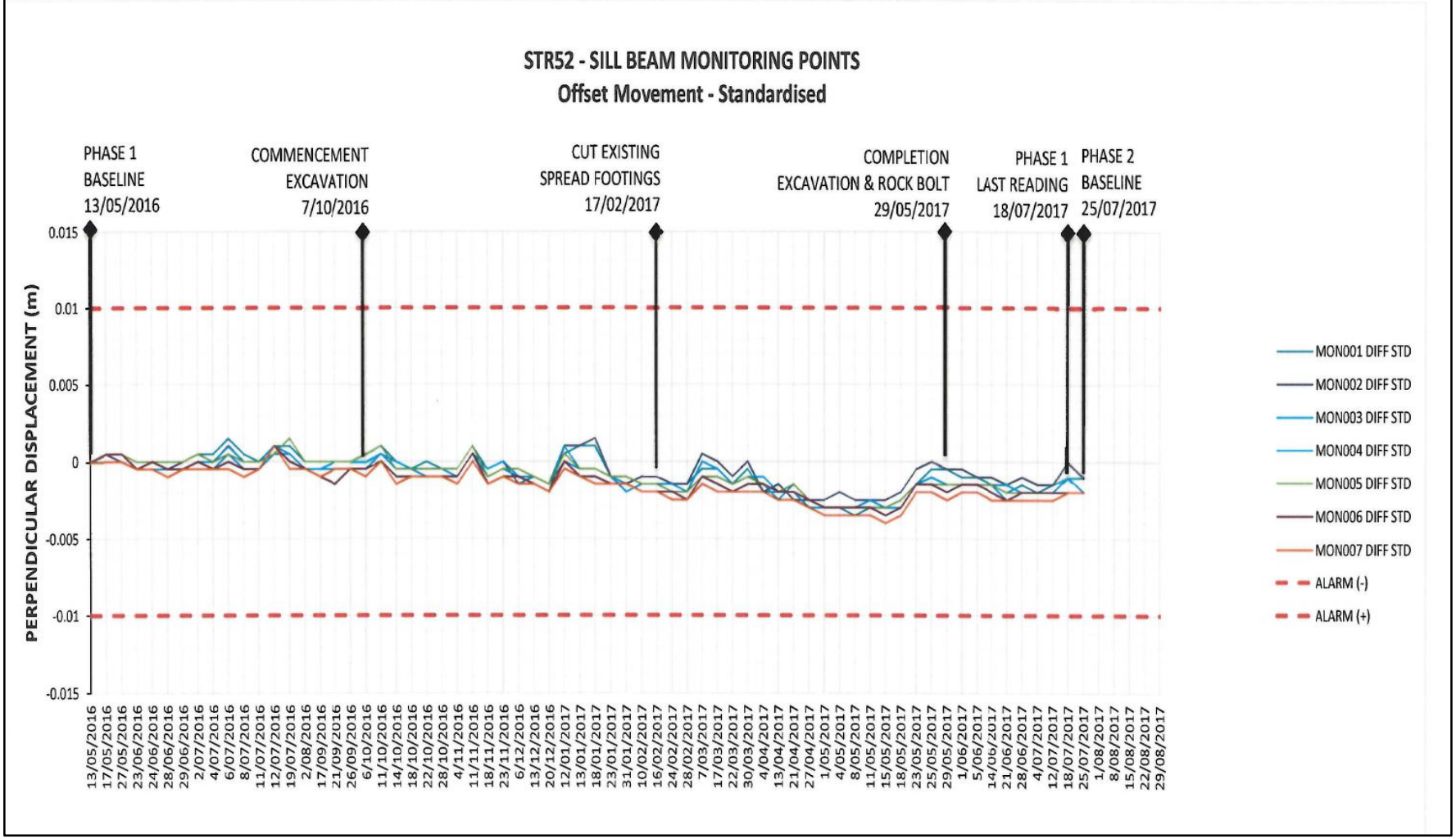

Introduction | Construction Sequence

Introduction | Construction Sequence

Introduction | Construction Sequence

Introduction | Construction Sequence

Introduction | Construction Sequence

Introduction | Pier Protection

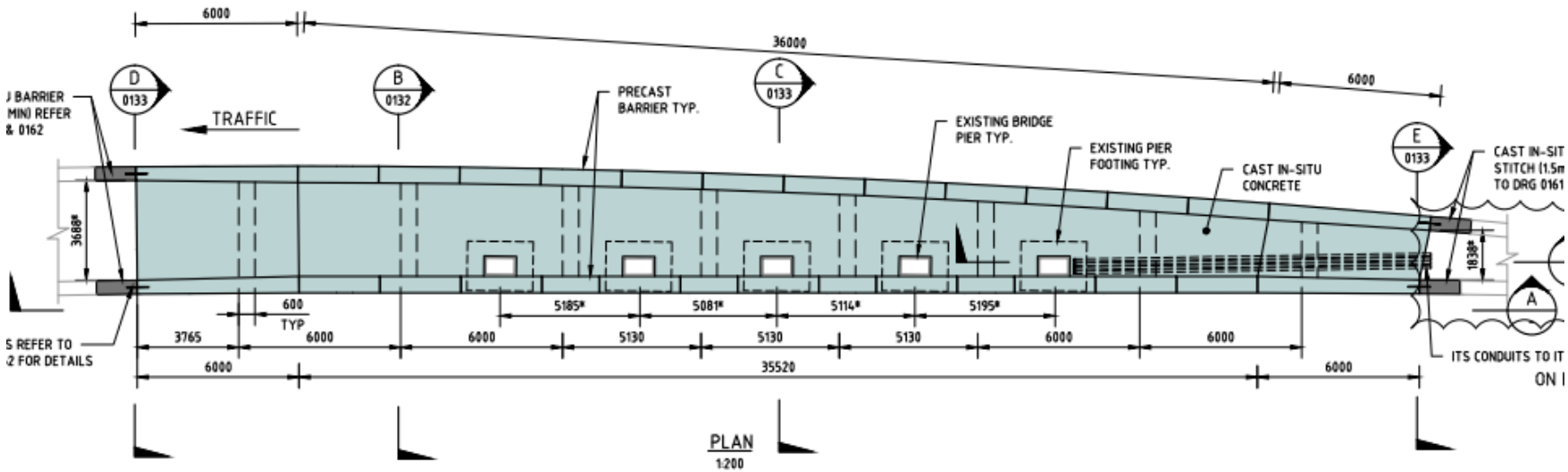

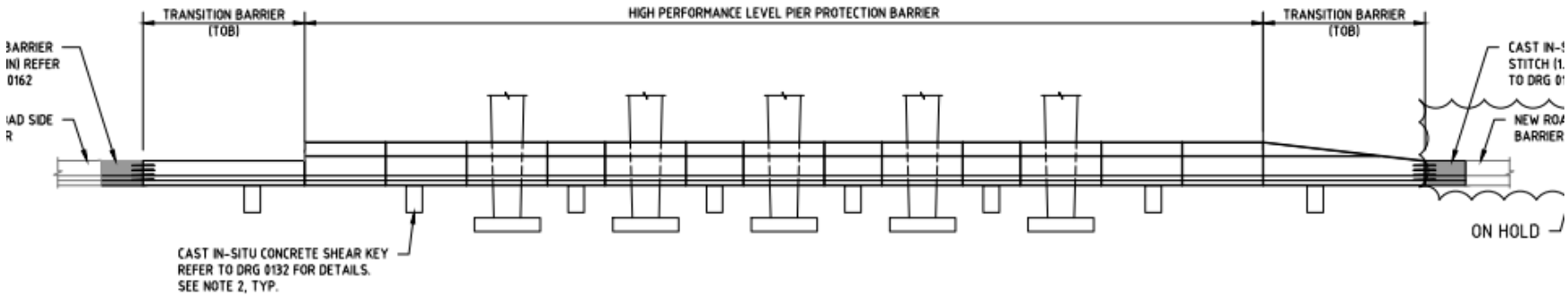

Introduction | Pier Protection

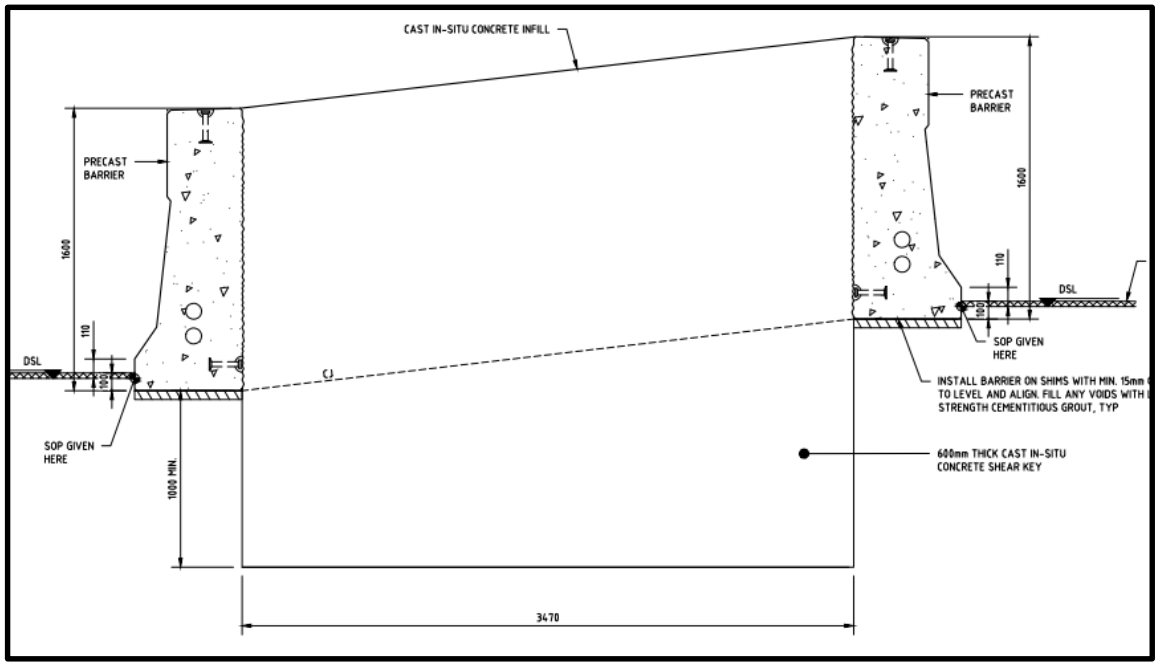

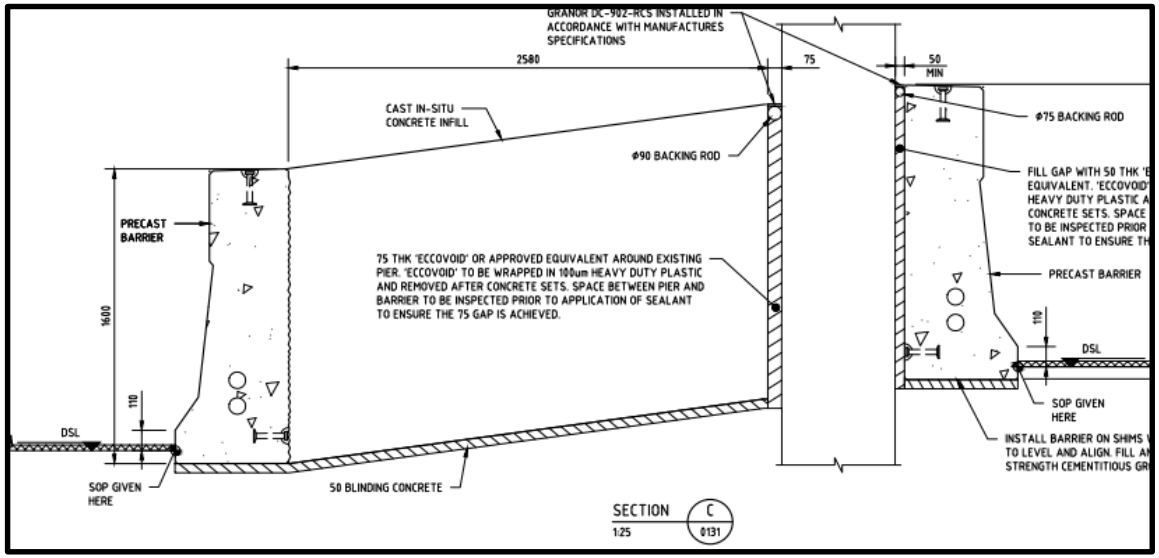

Introduction | Pier Protection

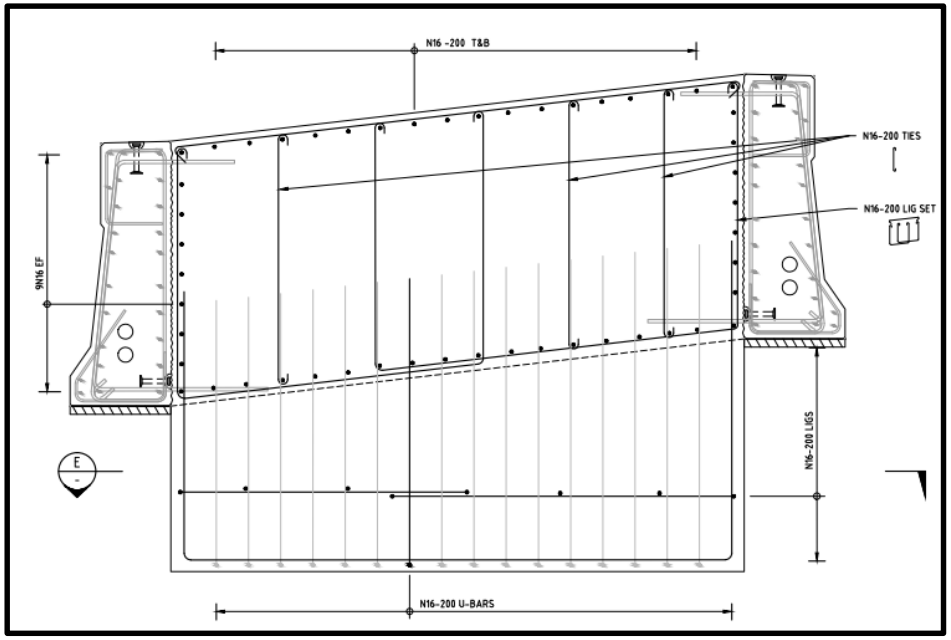

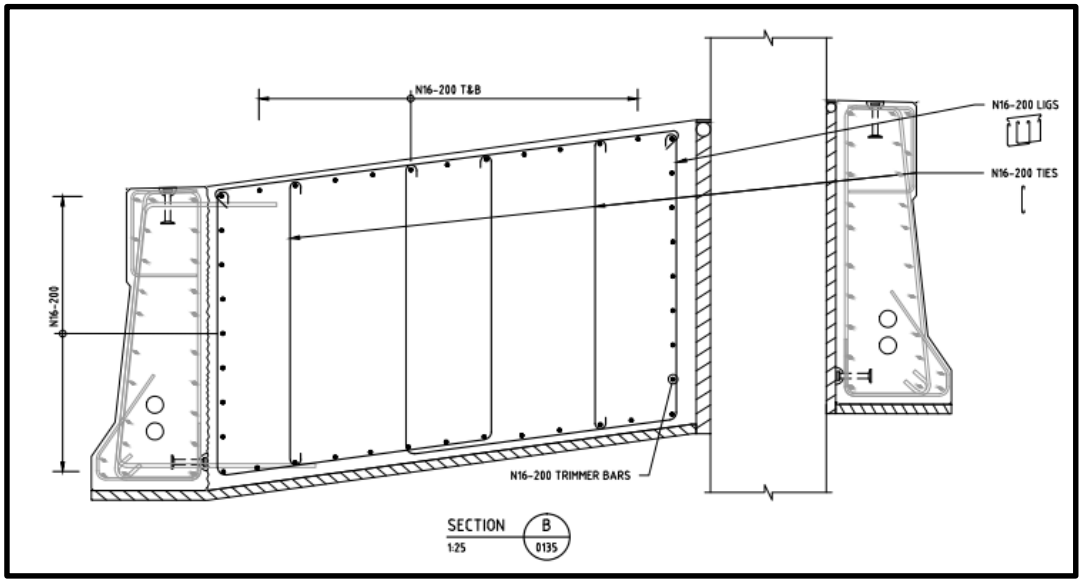

Conclusions

- Two additional traffic lanes accommodated under existing bridge by
  - Removing spill through and
  - Partial demolition of counterfort wall
- Remaining part of the footing was found insufficient in providing axial and lateral support to the abutment
- New infill blade walls constructed in between existing support to carry axial load out of existing footing
- Combination of blade wall with soil nail provided required lateral support
- Monitoring result shows little or no movement of the wall
- All construction now completed and Road open for traffic

Acknowledgments and Questions

- Acknowledgments
  - CPB Contractors
  - Transurban
  - VicRoads
  - Douglas Partners
  - Hassell
- Thank you for listening

www.ghd.com

citylinktullawidening.vic.gov.au