BECKWITH ELECTRIC CO. INC.

Transformer Protection: M-3311A

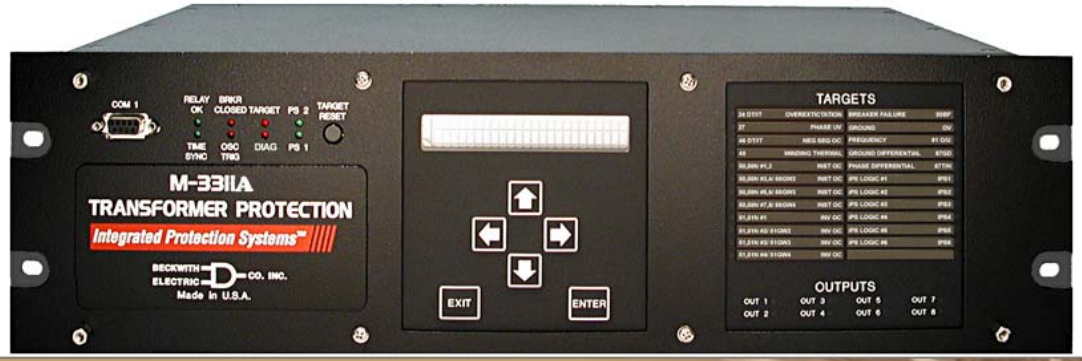

Drew Welton

Vice President of Sales, Creative Technical Solutions
Beckwith Electric Company
dwelton@beckwithelectric.com
727-317-8899

Drew Welton is the Vice President of Sales & Creative Technical Solutions for Beckwith Electric and provides strategic leadership to the sales management team as well as creative technical solutions to our customers. Mr. Welton joined Beckwith Electric in 2016 as Director of Sales to provide strategic sales leadership and to further develop and execute sales channels.

- North American Regional Manager for OMICRON starting in 1997.
- Regional Sales Manager with Beckwith Electric. He also served as National Sales Director for Substation Automation with AREVA T&D.
- Written numerous articles on substation maintenance testing, and has conducted numerous training sessions for substation technicians and engineers at utilities and universities across North America.
- 20 year Senior Member of IEEE-PES, has been a contributor on a number of PSRC working groups, and presented at a number of industry conferences specific to power system protection and control.
- Graduate of Fort Lewis College, Durango, CO, with a Bachelor's degree in Business Administration.

Presenter Contact Info

Wayne Hartmann

Senior VP, Customer Excellence

Beckwith Electric Company

whartmann@beckwithelectric.com

904-238-3844

Wayne is the top strategist for delivering innovative technology messages to the Electric Power Industry through technical forums and industry standard development.

- Before joining Beckwith Electric, performed in Application, Sales and Marketing Management capacities at PowerSecure, General Electric, Siemens Power T&D and Alstom T&D.
- Provides training and mentoring to Beckwith Electric personnel in Sales, Marketing, Creative Technical Solutions and Engineering.
- Key contributor to product ideation and holds a leadership role in the development of course structure and presentation materials for annual and regional Protection & Control Seminars.
- Senior Member of IEEE, serving as a Main Committee Member of the Power System Relaying and Control Committee for over 25 years.
  - Chair Emeritus of the IEEE PSRCC Rotating Machinery Subcommittee ('07-'10).
  - Contributed to numerous IEEE Standards, Guides, Reports, Tutorials and Transactions, delivered Tutorials IEEE Conferences, and authored and presented numerous technical papers at key industry conferences.
- Contributed to McGraw-Hill's "Standard Handbook of Power Plant Engineering."

M-3311A Typical Connection Diagram
Two Winding Model

2 Winding

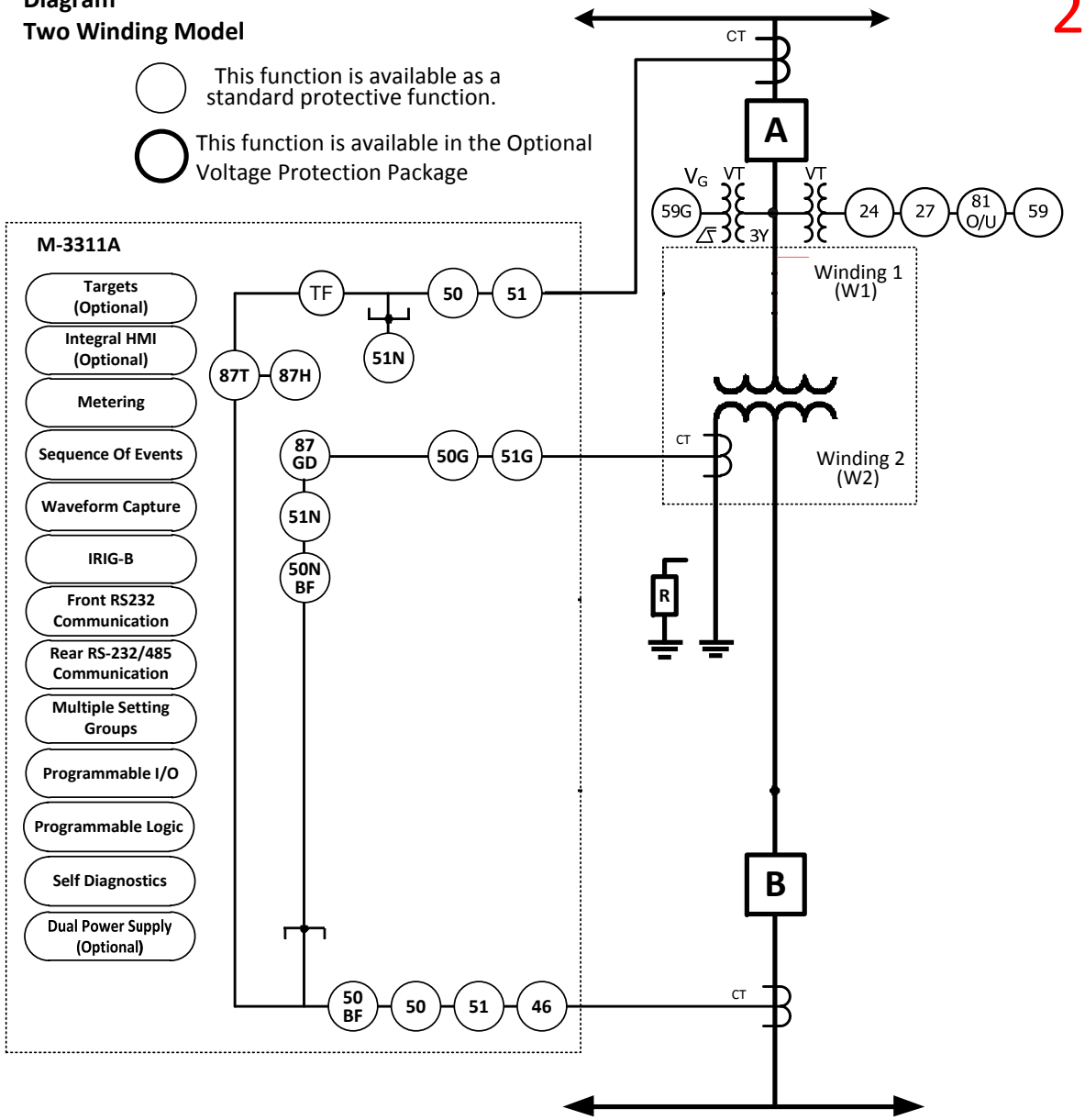

Standard

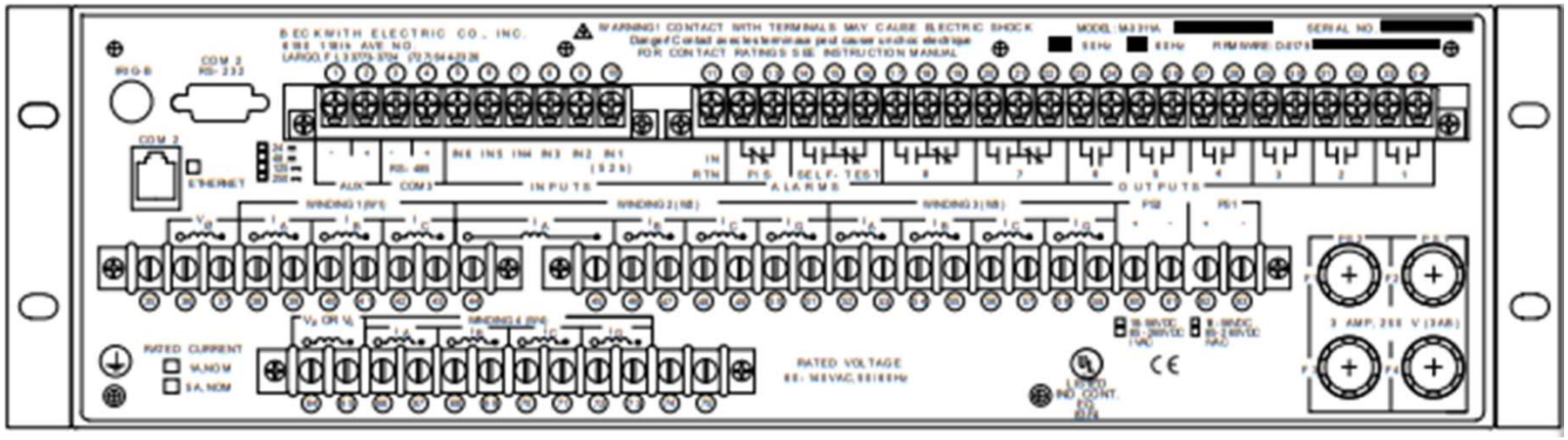

Expanded

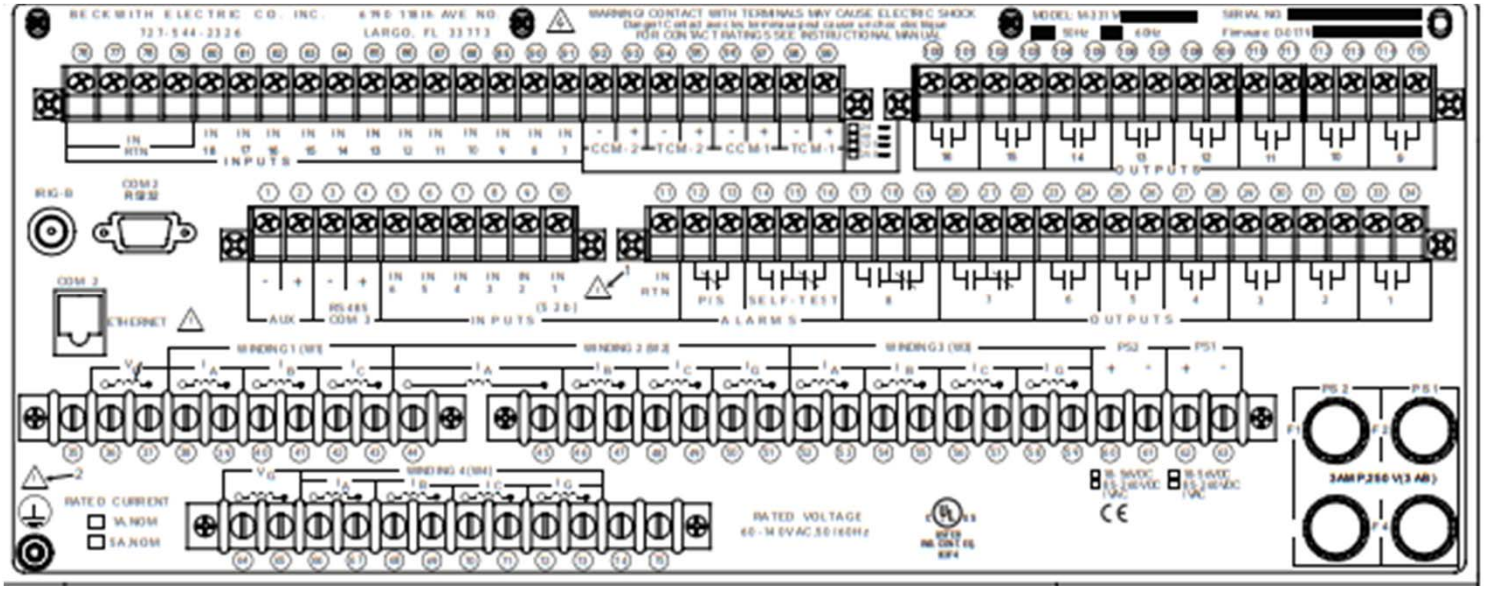

Normal Operation - No Targets

Display dark if there are no active targets

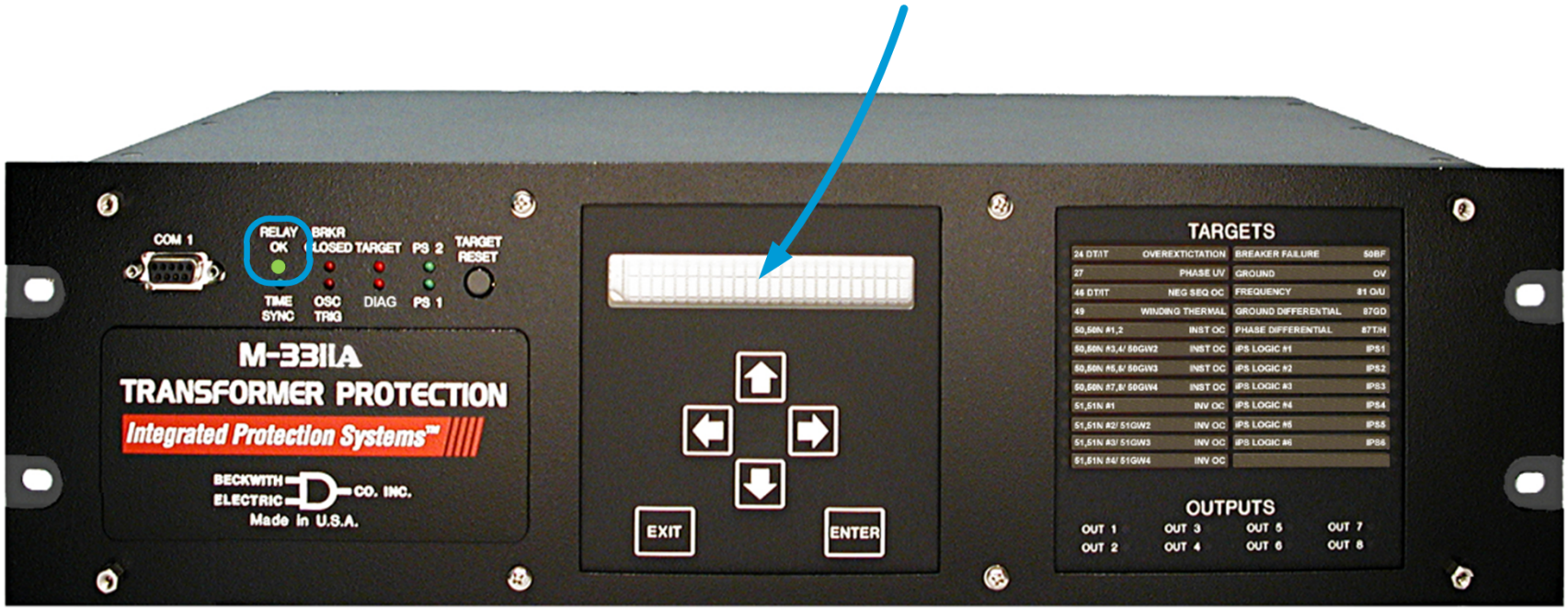

- Power supply fail contact = energized
  - Note: On relays with 2 power supplies installed, both must be powered up to energize this contact.
- Diagnostic Contact = coils energized, “OK” state

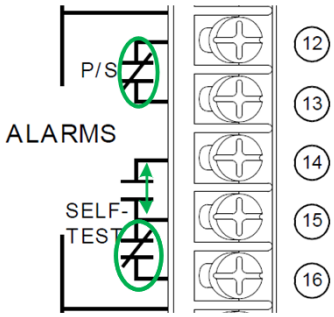

Tripped

Target, Time, Outputs, Function, Phase

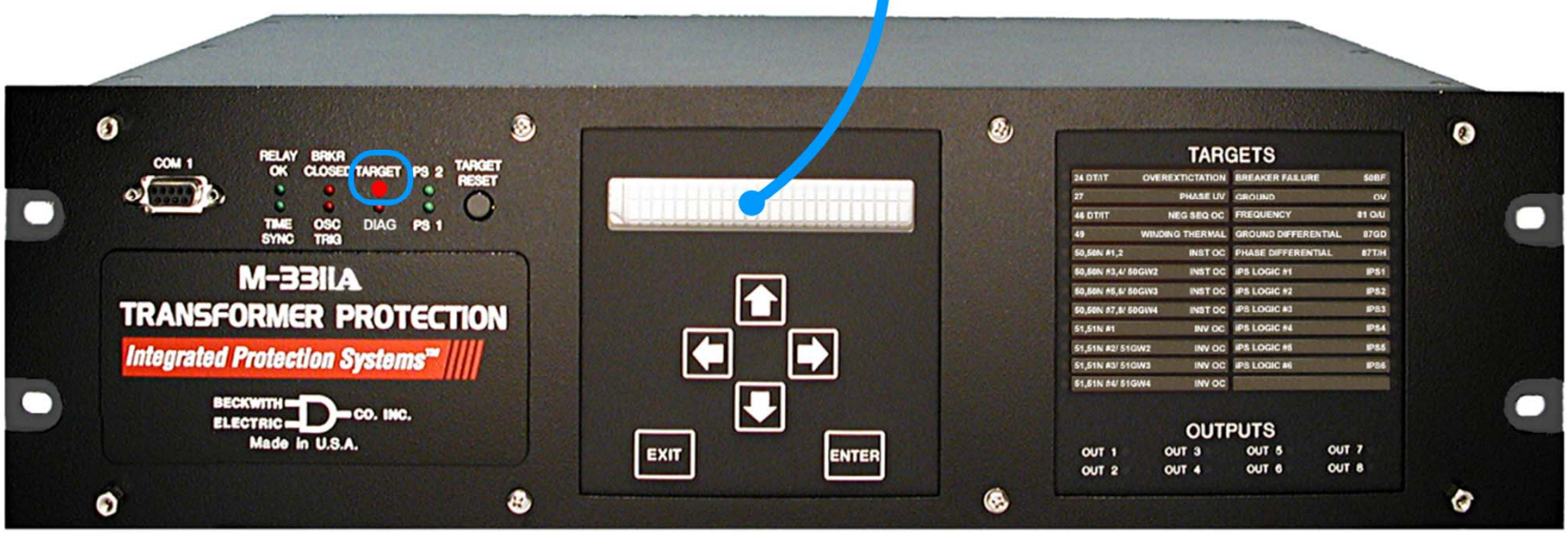

•One or more “OUTPUT” LEDs illuminated

Trip Cleared and Target Present

Target, Time, Outputs, Function, Phase

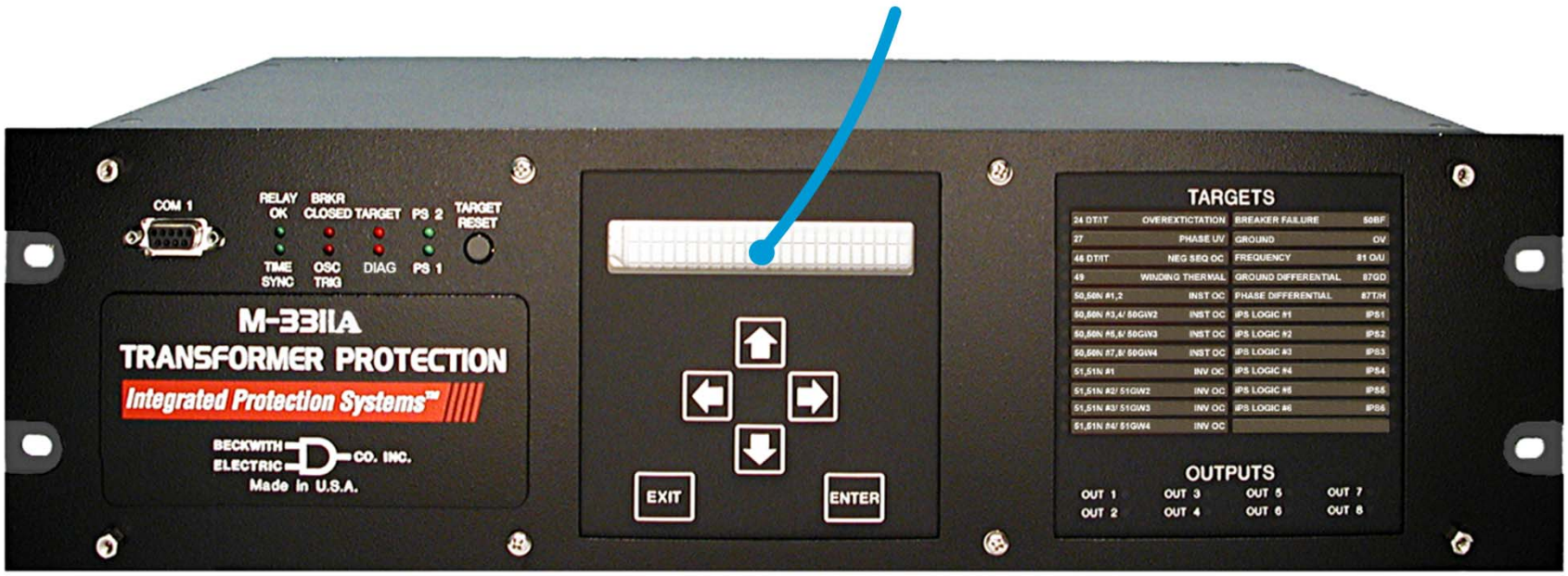

•All “OUTPUT” LEDs Extinguished

Relay failed internal self diagnostics

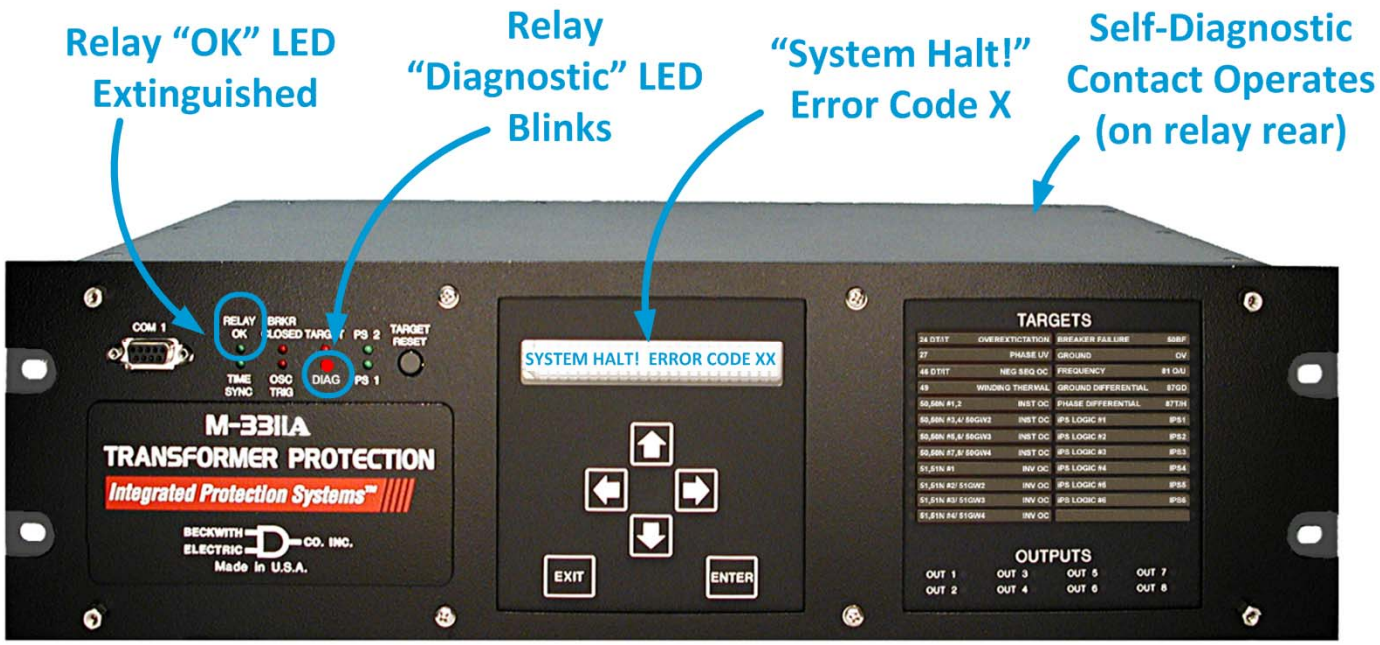

- If the "Relay OK LED" is extinguished, the relay is not in service.
  - Contact the factory if a "System Halt" message is displayed or the "Relay OK" LED is extinguished.
- Resetting the relay may temporarily remove the error but may result in a false trip or no trip operation.
- Do not press any HMI buttons while the relay is in diagnostic mode.

Other front panel indicators

- **Breaker Closed: Normally "ON" when Input 1 is Open**
- **PS 1 and PS2: "ON" when the associated power supply is on**

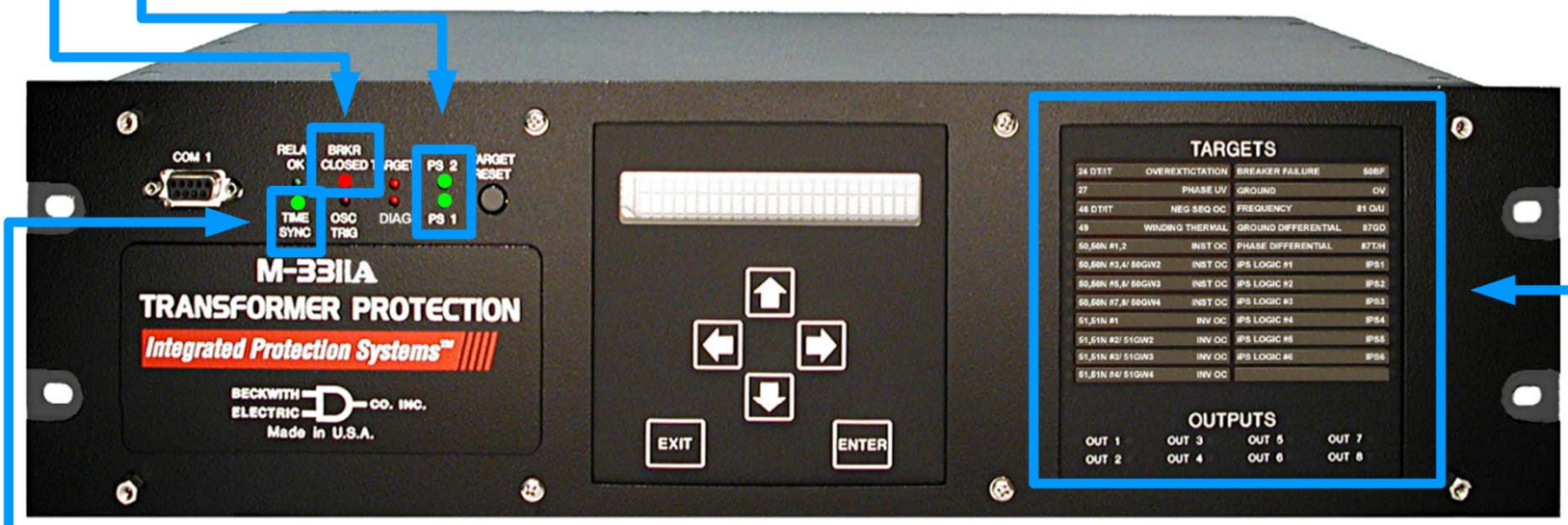

- **Time Sync: "ON" when IRIG-B signal is applied. No setting required.**
- **Target: "ON" when most recent event is not reset**

Front panel controls

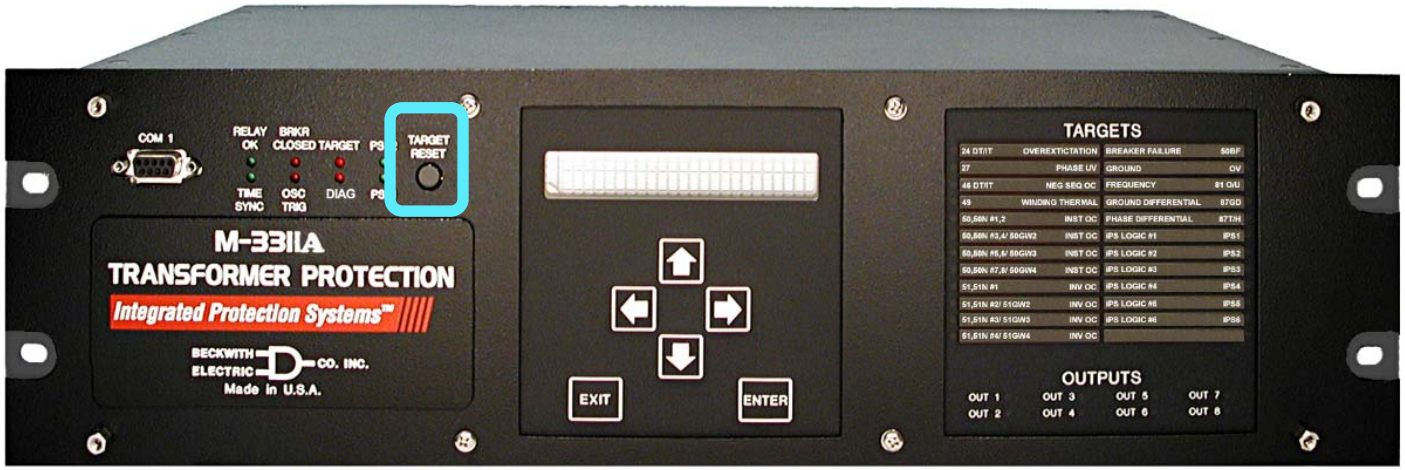

Target Reset Button:

- **Button Released:** Target module and HMI display the most recent event information.
- **Button Pressed and Released:** LED test then targets are reset *IF ALL TRIPPED FUNCTIONS ARE RESET.*
- **Button Pressed and Held:** Target module displays functions that are currently picked up.

Note: Output LED's always display real time status of output contacts.

Front Panel Controls: HMI Operation

- Access by pressing any button after the Power On Self Test terminates.
- The selected menu item appears in capital letters.
- Press the **RIGHT** and **LEFT** arrows to move between menu items.
- Press **ENTER** to move into a submenu or item
- Press **EXIT** move out of a submenu.
- The **UP** and **DOWN** arrows are used to change values.

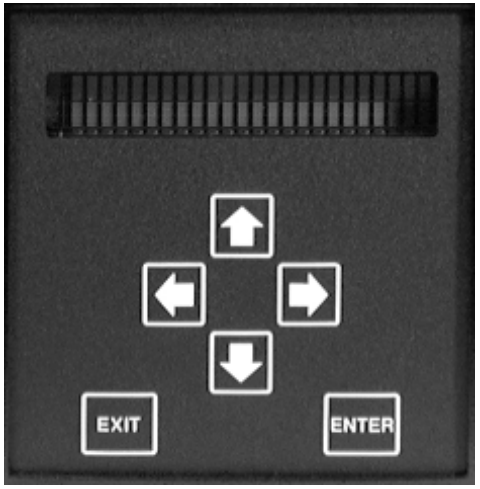

HMI Operation

VOLTAGE RELAY
VOLT curr freq v/hz →

2/3 Winding
- 27 Phase Undervoltage
- 59 Phase Overvoltage
- 59G Ground Overvoltage

4 Winding
- 27 Phase Undervoltage
- 59G Ground Overvoltage

CURRENT RELAY
volt CURR freq v/hz →

- 46 Negative Sequence Overcurrent
- 49 Winding Thermal Protection
- 50 Instantaneous Overcurrent
- 51 Inverse Time Phase Overcurrent
- 50G Instantaneous Ground Overcurrent
- 51G Inverse Time Ground Overcurrent
- 50N Instantaneous Residual Overcurrent
- 51N Inverse Time Residual Overcurrent
- 87 Phase Differential Overcurrent
- 87GD Ground Differential Overcurrent
- 50BF Breaker Failure

FREQUENCY RELAY
volt curr FREQ v/hz →

- 81 Over/Under Frequency

VOLTS PER HERTZ RELAY
volt curr freq V/HZ →

- 24 Definite Time Volts/Hertz
- 24 Inverse Time Volts/Hertz

IPS LOGIC
IPS brkr thflt tcm →

- IPSlogic

BREAKER MONITORING
ips BRKR thflt tcm →

- Set Breaker Monitoring
- Breaker ACC. Status
- Preset Accumulators
- Clear Accumulators

THROUGH FAULT
ips brkr THFLT tcm →

- Through Fault

TRIP CIRCUIT MONITORING
ips brkr thflt TCM →

- Trip Circuit Monitoring

CONFIGURE RELAY
CONFIG sys stat dmd →

- Voltage Relay
- Current Relay
- Frequency Relay
- Volts per Hertz Relay
- IPSlogic
- Breaker Monitor
- Through Fault
- TCM Monitor

SETUP SYSTEM
config SYS stat dmd →

2/3 Winding
- Input Activated Profile
- Active Setpoint Profile
- Copy Active Profile
- Number of F87 Windings
- Winding Summing
- XFM/CT Connection
- Phase Rotation
- Relay Seal-In Time
- Active Input State
- V.T.a Ratio
- V.T.x Ratio
- Nominal Voltage
- Nominal Current
- V.T. Configuration
- Power Windings
- Phase Voltage Option
- VG Voltage Option
- W1 C.T. Ratio
- W2 C.T. Ratio
- W2 C.T. Ground Ratio
- W3 C.T. Ratio
- W3 C.T. Ground Ratio

4 Winding
- Input Activated Profile
- Active Setpoint Profile
- Copy Active Profile
- Nominal Voltage
- V.T. Configuration
- Number of Windings
- Winding Summing
- Custom XFM/CT Connection
- Phase Rotation
- Relay Seal-In Time
- Active Input State
- V.T.x Ratio
- V.T.g Ground Ratio
- W1 C.T. Ratio
- W2 C.T. Ratio
- W2 C.T. Ground Ratio
- W3 C.T. Ratio
- W3 C.T. Ground Ratio
- W4 C.T. Ratio
- W4 C.T. Ground Ratio

STATUS
config sys STAT dmd →

- Voltage Status
- Current Status
- Frequency Status
- Volts/Hertz Status
- Power Meter (2/3 Winding Only)
- Input/Output Status
- Trip Circuit Input
- Timer Status
- Counters
- Time of Last Power Up
- Error Codes
- Checksum

DEMAND
config sys stat DMD →

- Demand Status
- Demand Interval
- Maximum Demand Status
- Clear Maximum Demand

VIEW TARGET HISTORY
TARGETS osc_rec comm →

- View Target History
- Clear Target History

OSCILLOGRAPH RECORDER
targets OSC_REC comm →

- View Record Status
- Clear Records
- Recorder Setup

COMMUNICATION
targets osc_rec COMM →

- COM1 Setup
- COM2 Setup
- COM3 Setup
- Communication Address
- Response Time Delay
- Communication Access Code
- Ethernet Setup
- Ethernet IP Address

SETUP UNIT
← SETUP

- Software Version
- ETH Firmware Version
- Serial Number
- Alter Access Codes
- User Control Number
- User Logo Line 1
- User Logo Line 2
- Clear Output Counters
- Clear Alarm Counter
- Date & Time
- Clear Error Codes
- Diagnostic Mode
  - Output Test (Relay)
  - Input Test (Status)
  - Status LED Test
  - Target LED Test
  - Button Test
  - Display Test
  - COM1 LoopBack Test
  - COM2 LoopBack Test
  - COM3 Echo Test
  - Clock Test
  - Flash Relay OK LED
  - Auto Calibration
  - Factory Use Only

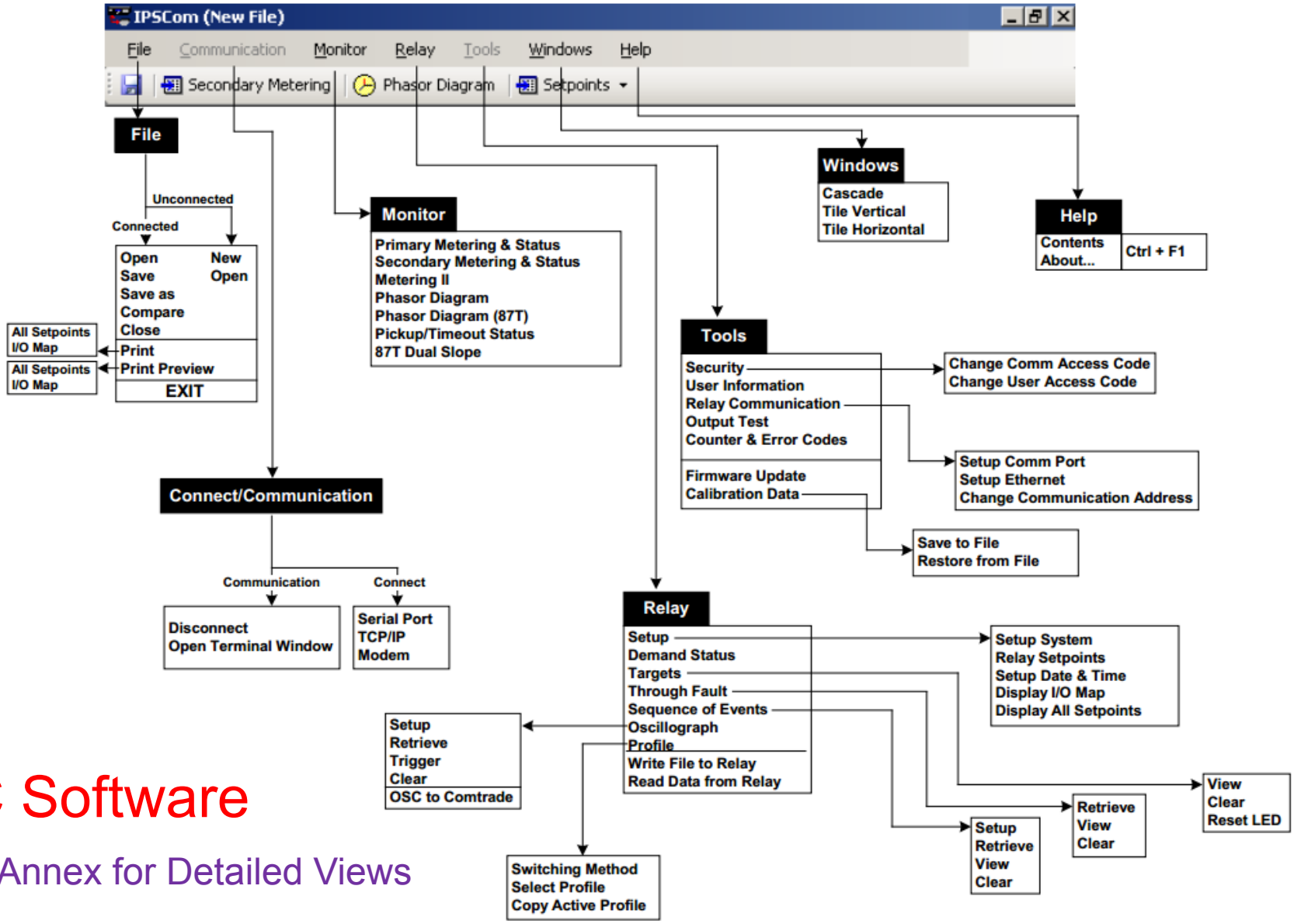

PC Software

See Annex for Detailed Views

Working Offline

•Used to create, view, or modify relay setting files

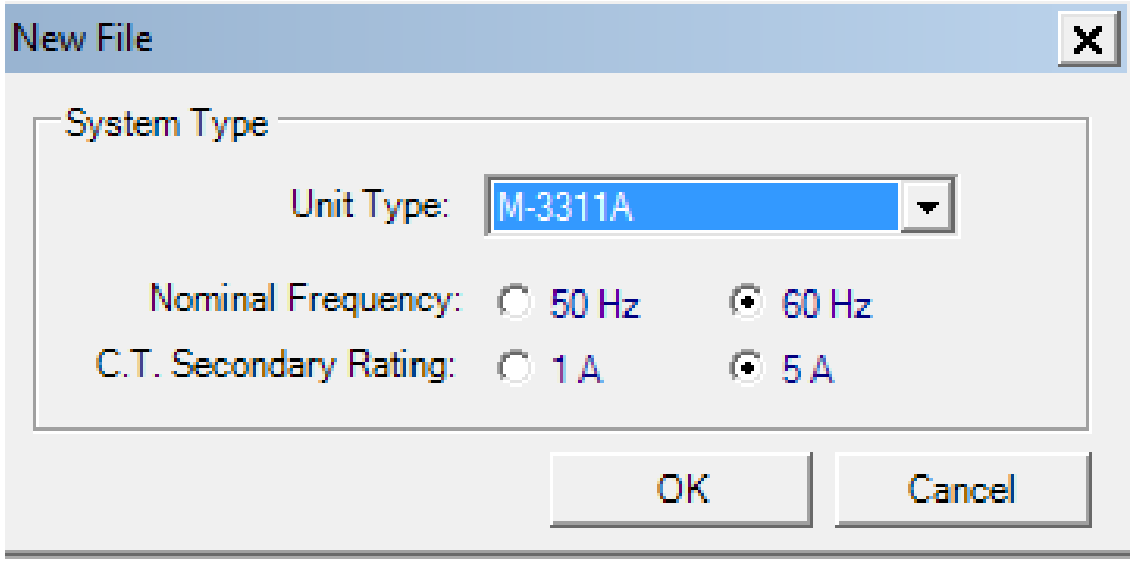

For a new Setting file:

- •Select File\New
- •Set Unit type, frequency, CT secondary rating

•For and Existing File:

- •Select File\Open
- •Pick the file to be opened

•To Save, use the Save or Save As commands

Working Online

•Used to communicate directly with a relay via 232, 485, modem, or TCP/IP

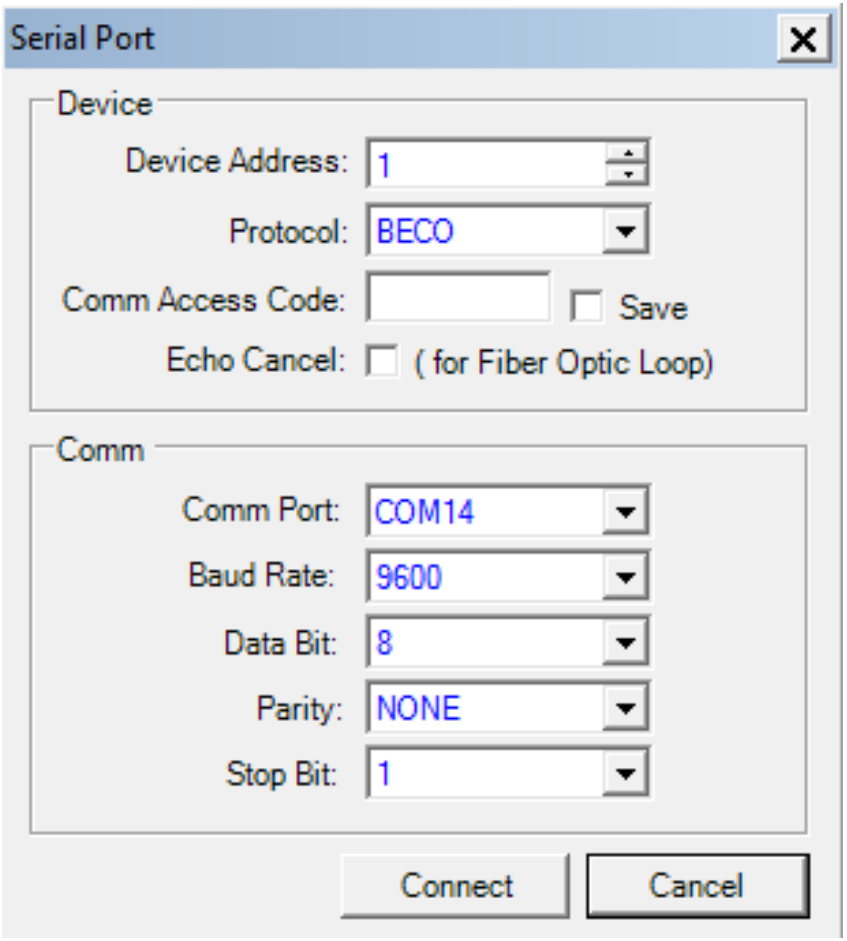

- PC Port - Serial port on the PC
- The following must be set to match the relay settings :
  - Baud Rate-9600 standard
  - Access Code-Defaults disabled
  - Address-232/485 network address
- For Modem or TCP/IP communications, press the appropriate buttons and set the parameters

Periodic Maintenance: General

All our relays incorporate self diagnostic hardware and continuously run a number of self diagnostic routines.

We highly recommend the relay self test contact as well as the power supply fail contact be connected as your application dictates.

Our minimum recommended periodic maintenance focuses on those components that cannot be checked by the internal diagnostic routines:

Periodic Maintenance: Critical Checks

Each Maintenance Outage:

1) **Relay Trip Test**: *Use the diagnostic feature to force a trip. Verify the breaker opens.*

2) **Relay Diagnostics**: *Perform relay diagnostic checks which check the operation of the status inputs and outputs.*

3) **Breaker Position Sen**sing: *Verify the breaker's position contact is working correctly.*

Digital Relay Self-Diagnostics

What it covers:

- Microprocessor hand-shaking
- ADC
- Power supply
- Communication failures
- Watchdogs
- Firmware flash failures

What it does not cover:

- Relay contacts
- Internal CT PT circuits
- Improper wiring
- **Misapplied logic**
- **Incorrect settings**

- In all cases, relay failures covered by self-diagnostics can alert operators through an alarm contact.
- The relay can then take itself out of service to avoid misoperations.

⇒W

Transformer Phase Differential

87T, 87HS

Differential Protection

Advantages

- Provides high speed detection of faults that can reduce damage due to the flow of fault currents
- Offers high speed isolation of the faulted transformer, preserving stability and decreasing momentary sag duration
- No need to coordinate with other protections
- The location of the fault is determined more precisely
  - Within the zone of differential protection as demarked by CT location

Differential Protection

- What goes into a “unit” comes out of a “unit”
- Kirchoff’s Law: The sum of the currents entering and leaving a junction is zero
- Straight forward concept, but not that simple in practice with transformers
- A host of issues challenges security and reliability of transformer differential protection

Differential Relay Principle

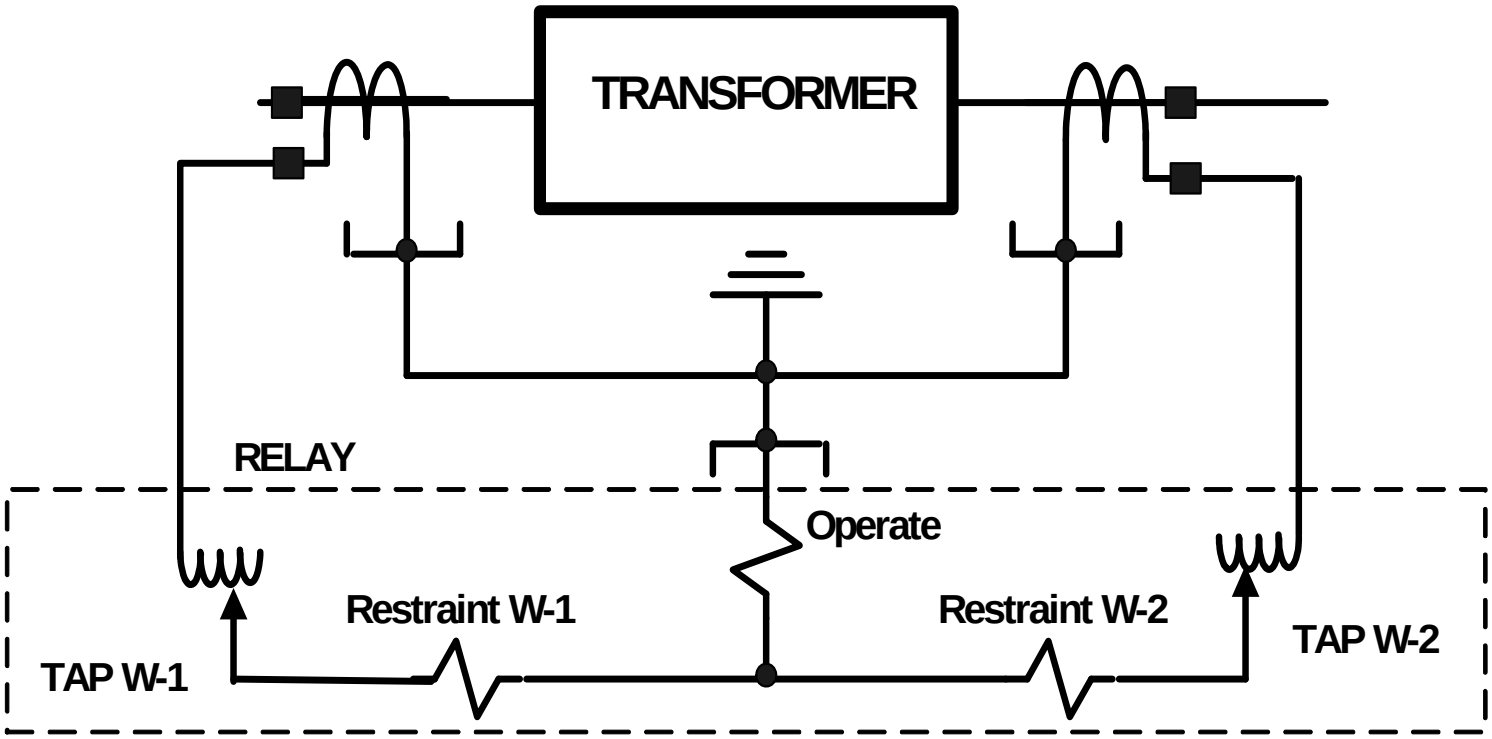

Differential Relay Principle: External Fault

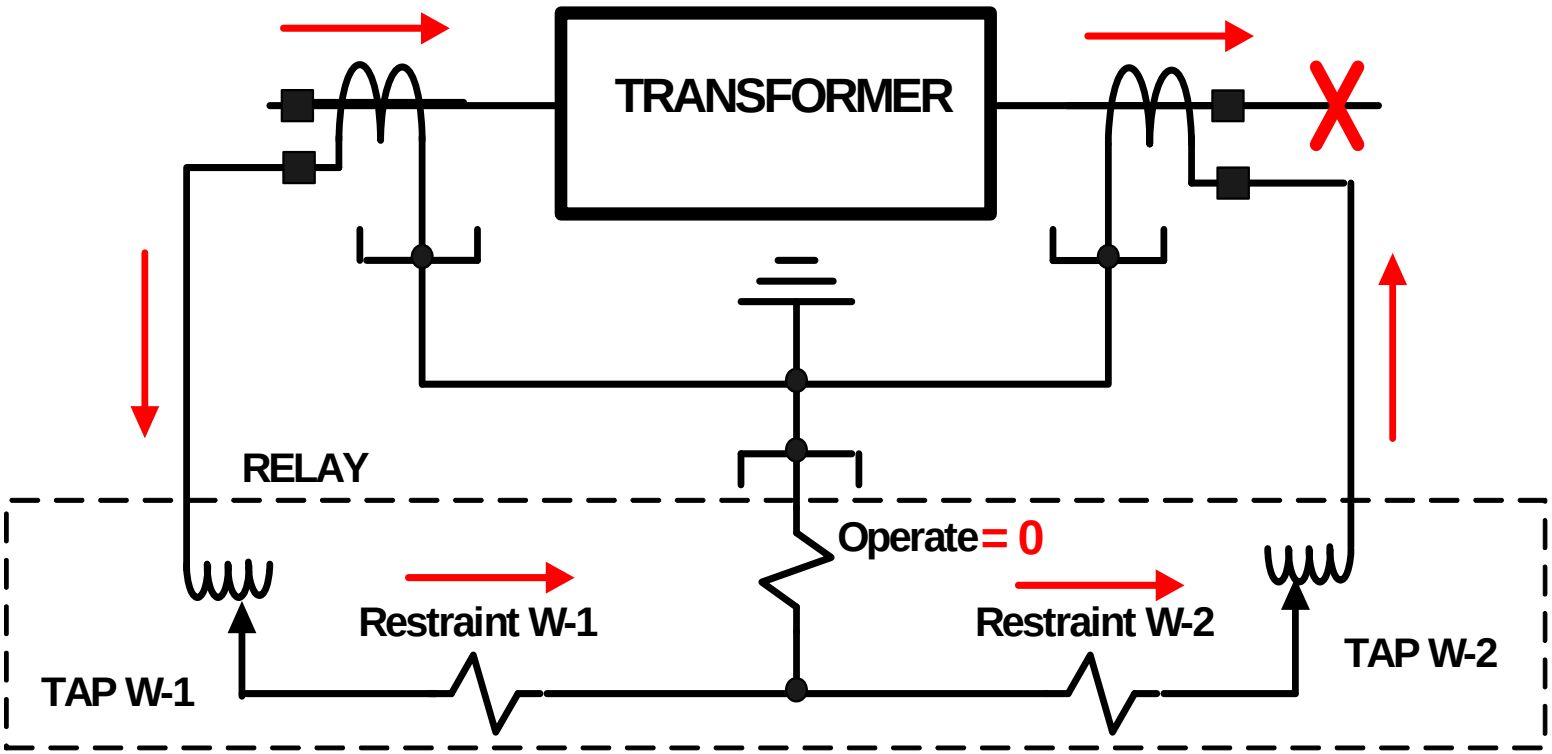

Differential Relay Principle: External Fault

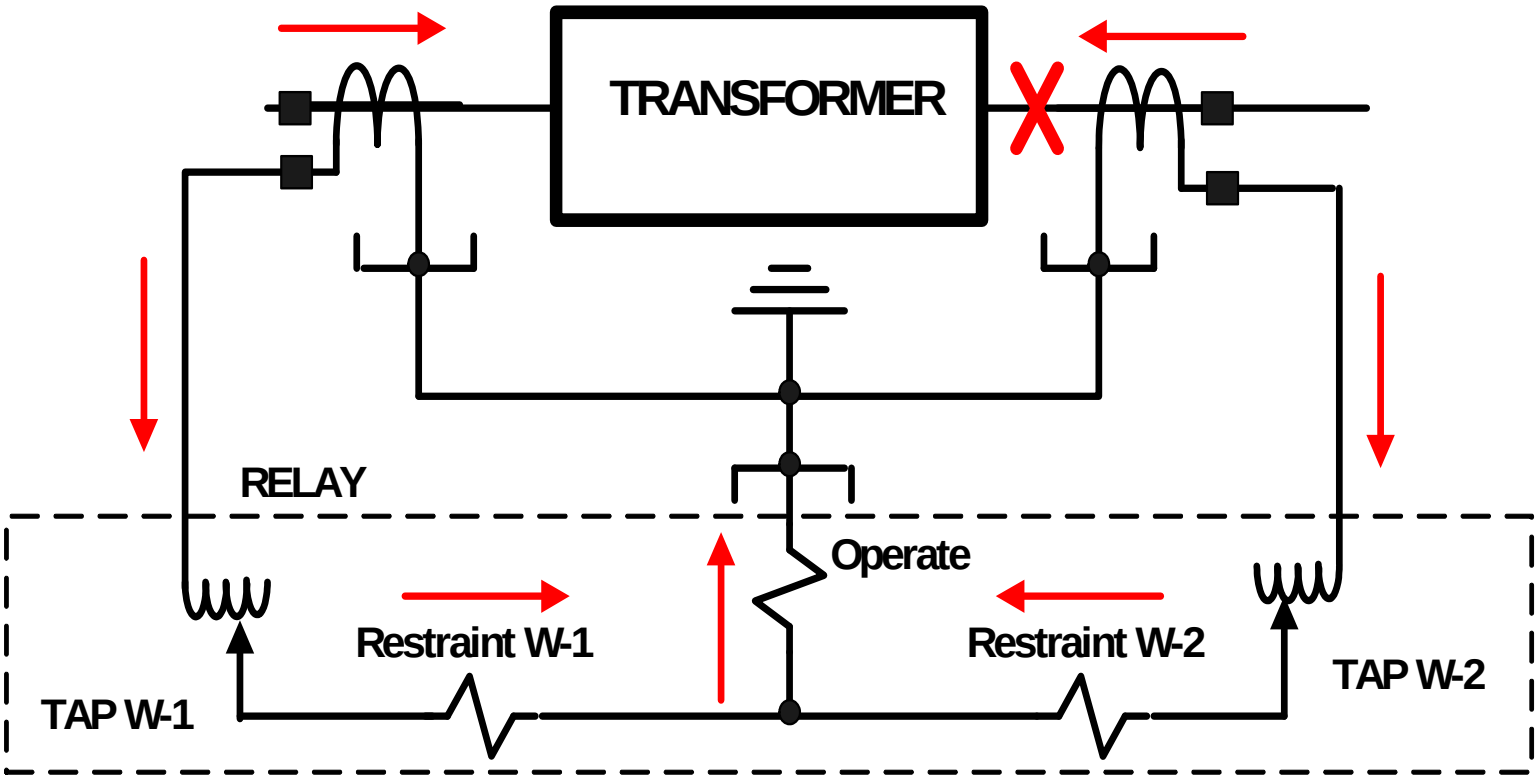

Transformer Phase Differential

- Applied with variable percentage slopes to accommodate CT saturation and CT ratio errors
- Applied with inrush and overexcitation restraints
- Pickup/slope setting should consider: magnetizing current, turns ratio errors due to fixed taps and +/- 10% variation due to LTC
- May not be sensitive enough for all faults (low level, ground faults near neutral)

Typical Phase Differential Characteristic

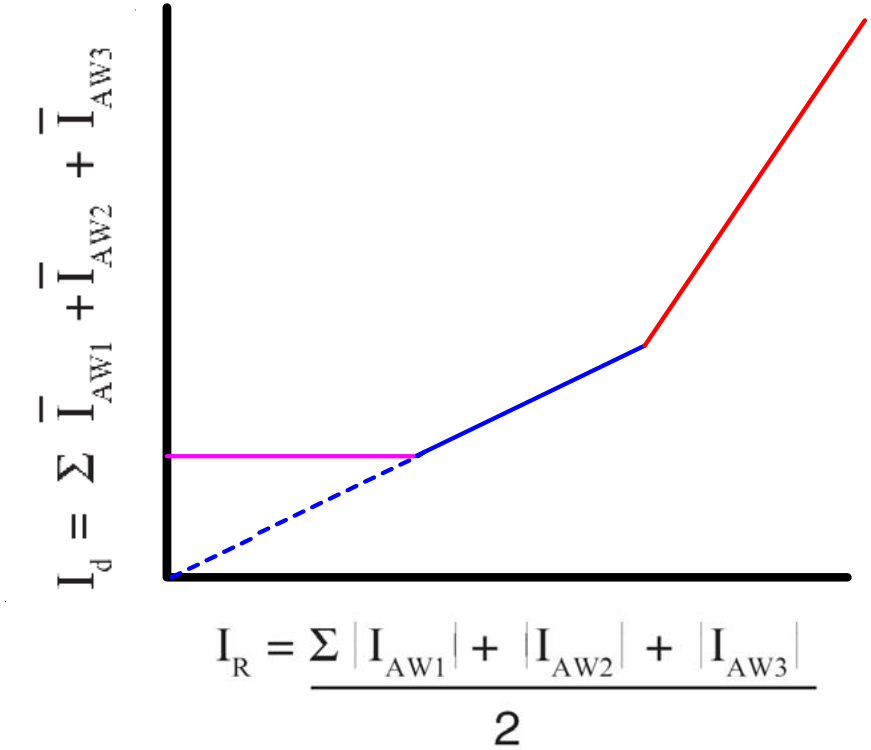

$I_1 + I_2 + I_3 = 0$

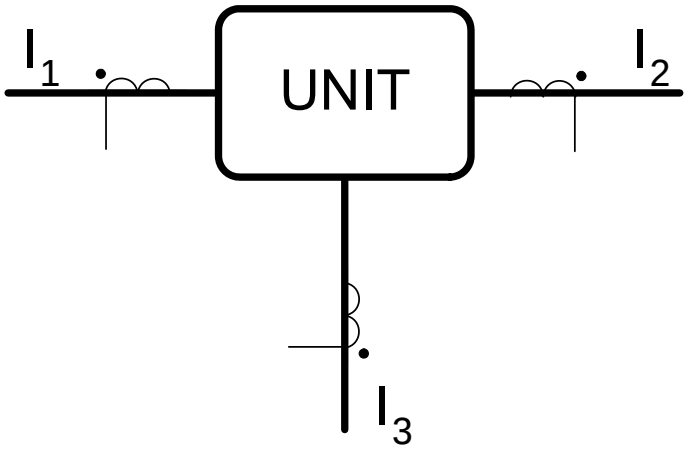

Through Current: Perfect Replication

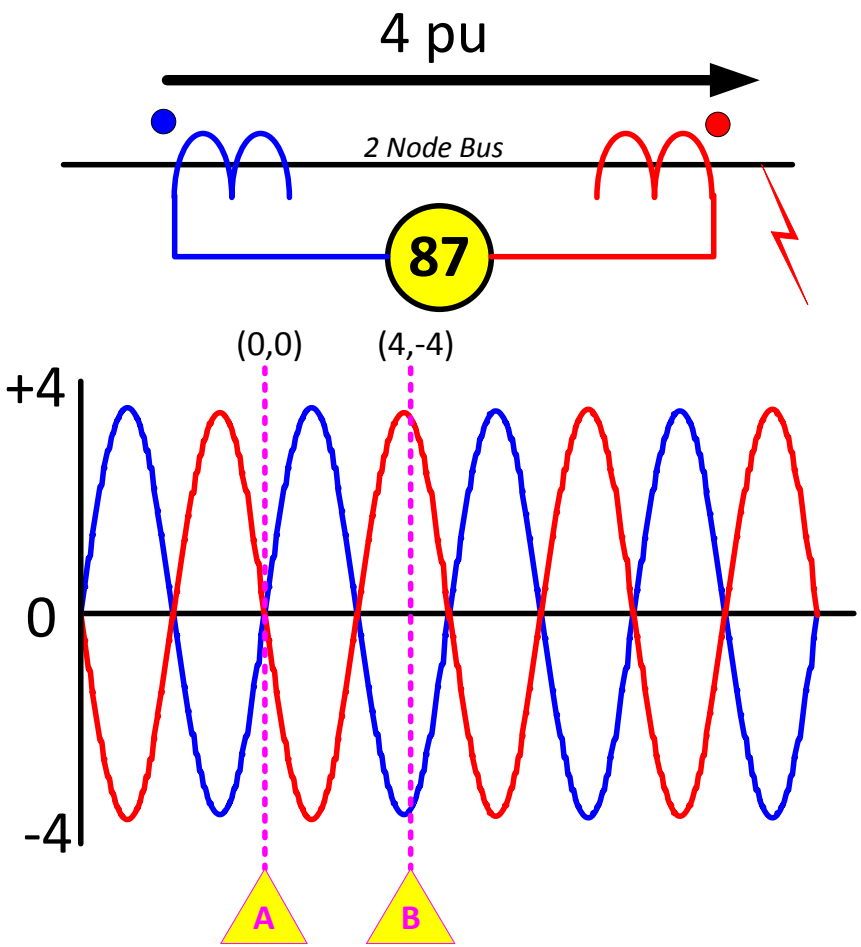

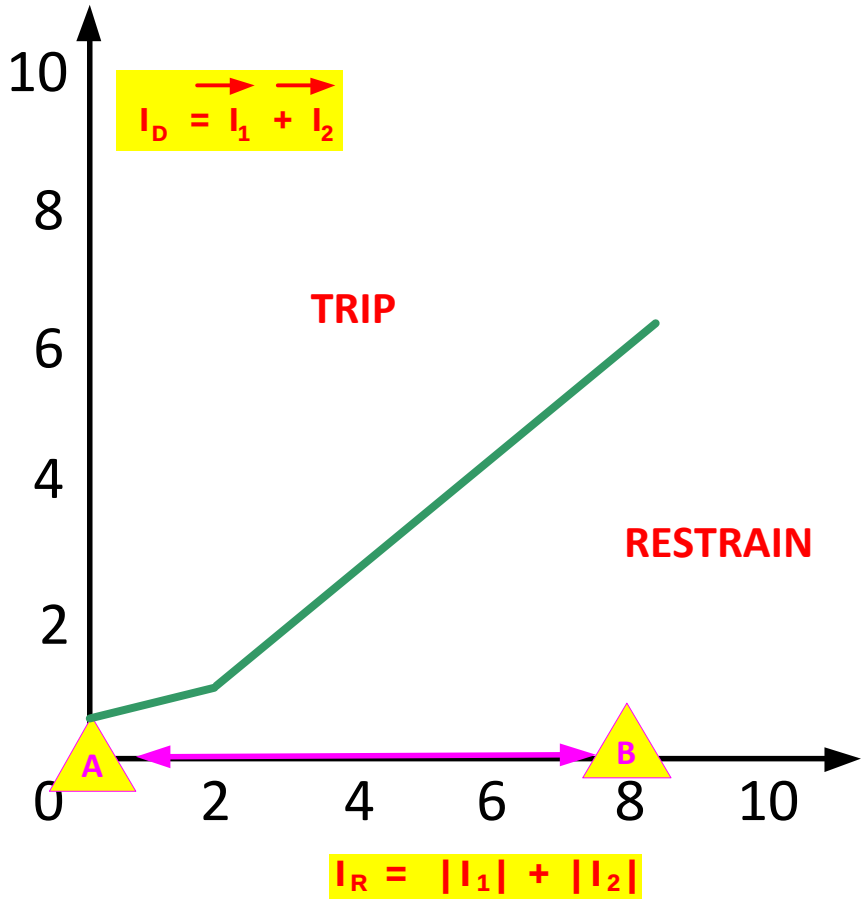

Through Current: Imperfect Replication

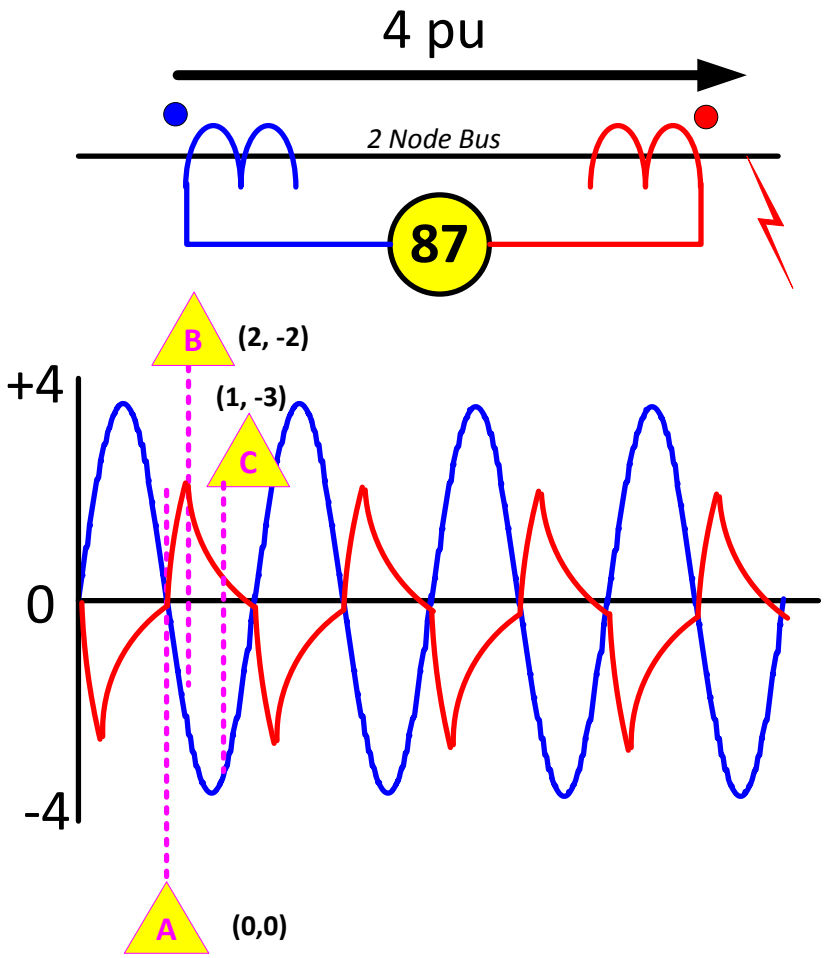

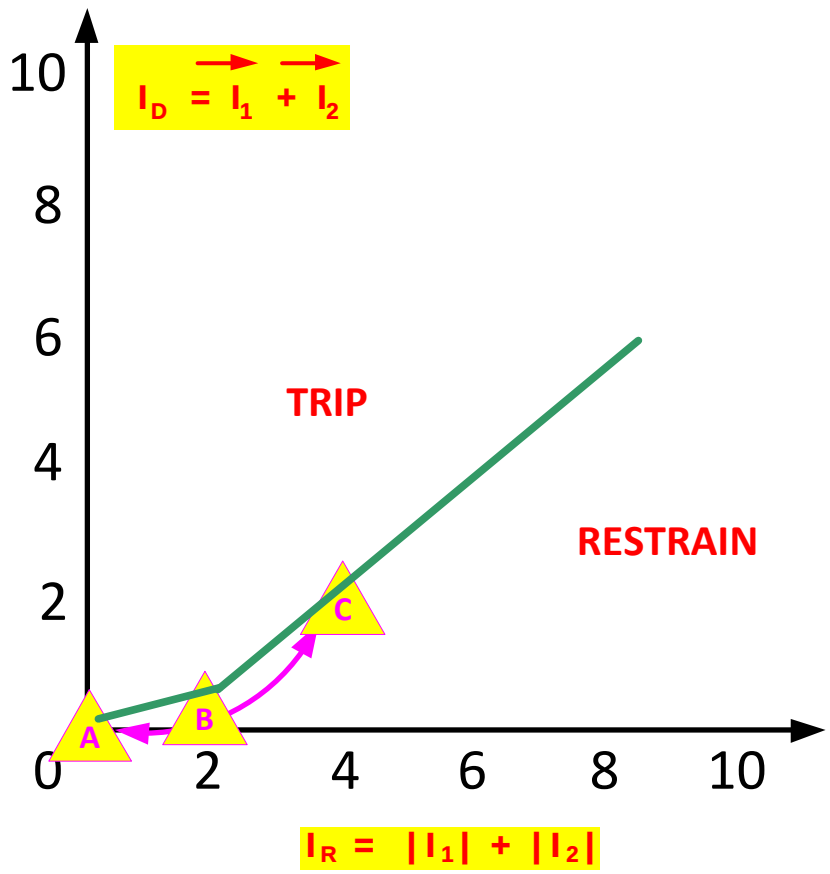

Internal Fault: Perfect Replication

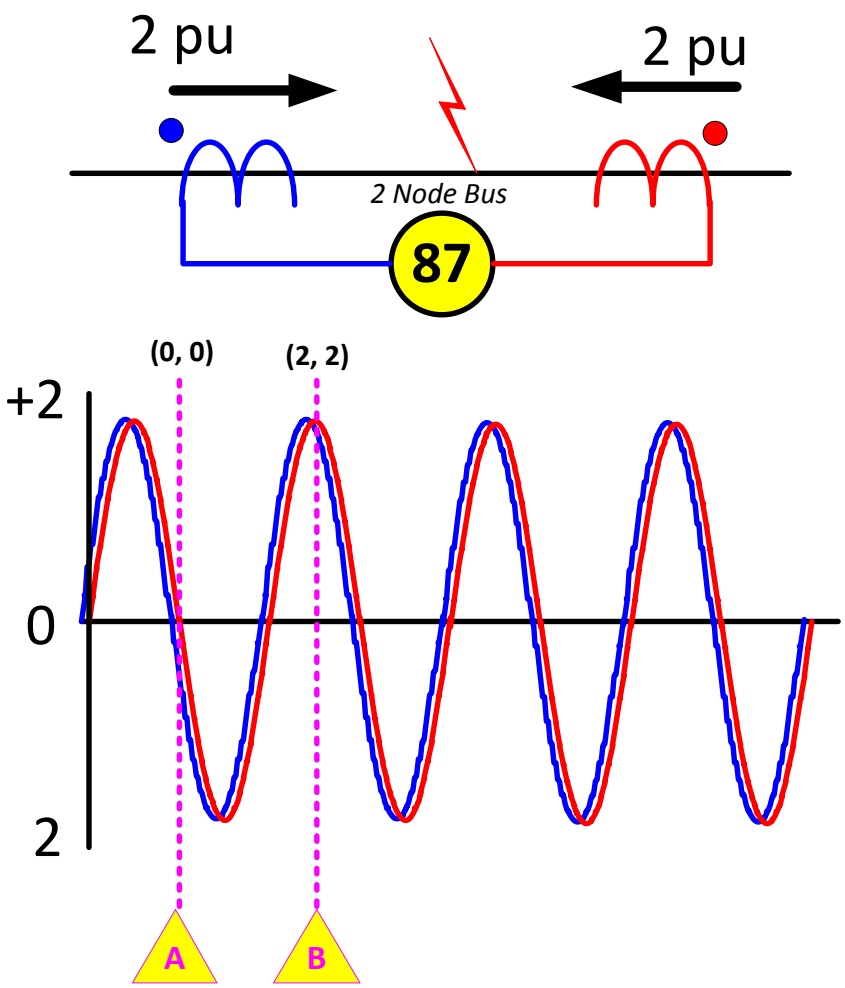

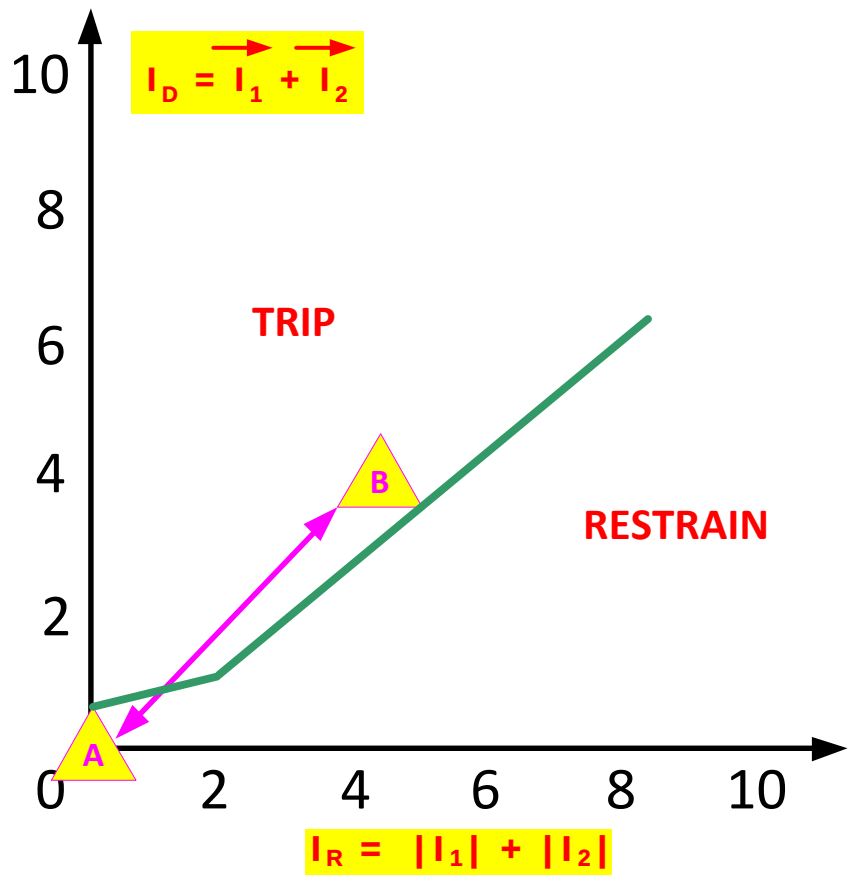

Internal Fault: Imperfect Replication

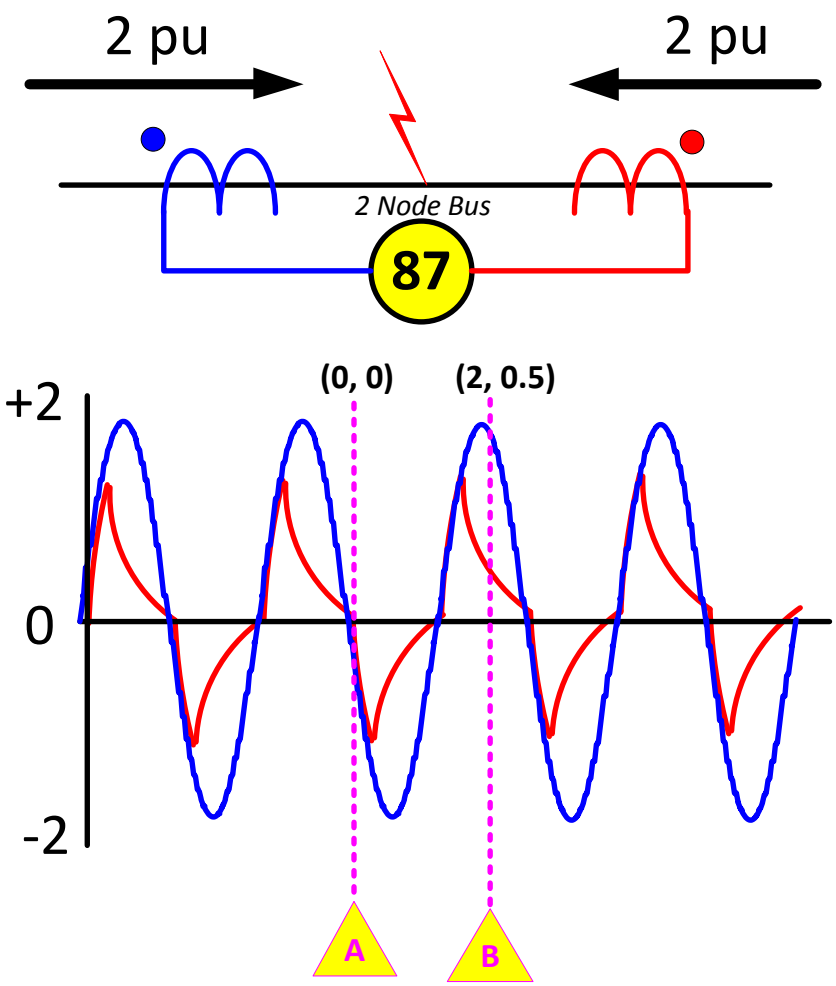

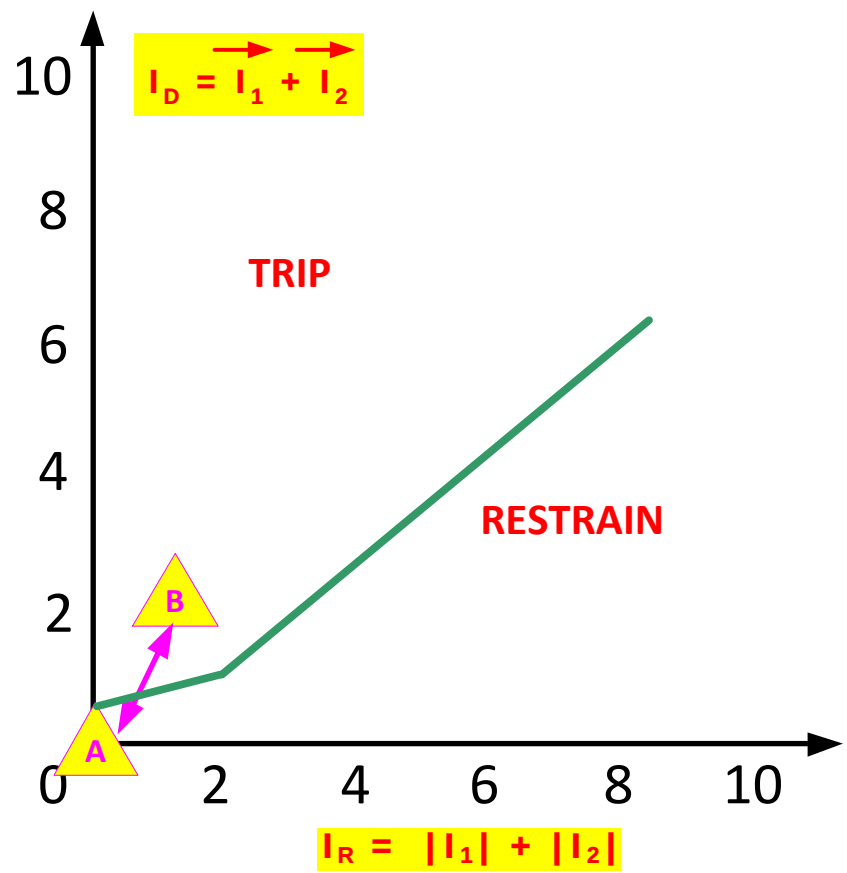

Unique Issues Applying to Transformer Differential Protection

- CT ratio caused current mismatch
- Transformation ratio caused current mismatch (fixed taps)
- LTC induced current mismatch
- Delta-wye transformation of currents
  - Vector group and current derivation issues
- Zero-sequence current elimination for external ground faults on wye windings
- Inrush phenomena and its resultant current mismatch

Unique Issues Applying to Transformer Differential Protection

- Harmonic content available during inrush period due to point-on-wave switching
  - Especially with newer transformers with step-lap core construction
- Overexcitation phenomena and its resultant current mismatch
- Internal ground fault sensitivity concerns
- Switch onto fault concerns
- CT saturation, remanance and tolerance

CT Performance:
200:5, C200, R=0.5, Offset = 0.5, 1000A

INPUT PARAMETERS:

		ENTER:	
Inverse of sat. curve slope =	S =	22	---
RMS voltage at 10A exc. current =	Vs =	200	volts rms
Turns ratio = n2/1=	N =	40	---
Winding resistance =	Rw =	0.300	ohms
Burden resistance =	Rb =	0.500	ohms
Burden reactance =	Xb =	0.500	ohms
System X/R ratio =	XoverR =	12.0	---
Per unit offset in primary current =	Off =	0.50	-1<Off<1
Per unit remanence (based on Vs) =	λrem	0.50	---
Symmetrical primary fault current =	Ip =	1,000	amps rms

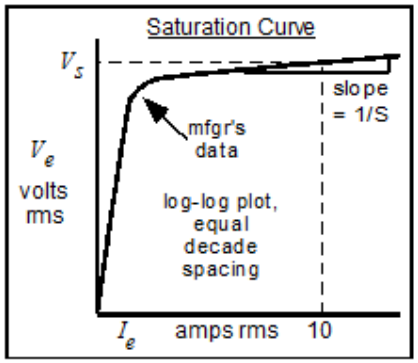

CALCULATED:

Rt =	Total burden resistance = Rw + Rb =	0.800	ohms
pf =	Total burden power factor =	0.848	---
Zb =	Total burden impedance =	0.943	ohms
Tau1 =	System time constant =	0.032	seconds
Lamsat =	Peak flux-linkages corresponding to Vs	0.750	Wb-turns
ω =	Radian freq =	376.99	rad/s
RP =	Rms-to-peak ratio =	0.34584	
A =	Coefficient in instantaneous ie versus lambda curve: ie = A * l^S :	1.61E+04	---
dt =	Time step =	0.000083	seconds
Lb =	Burden inductance =	0.00133	henries

Thick lines: **Ideal (blue)** and **actual (black)** secondary current in amps vs time in seconds.
Thin lines: **Ideal (blue)** and **actual (black)** secondary current extracted fundamental rms value, using a simple DFT with a one-cycle window.

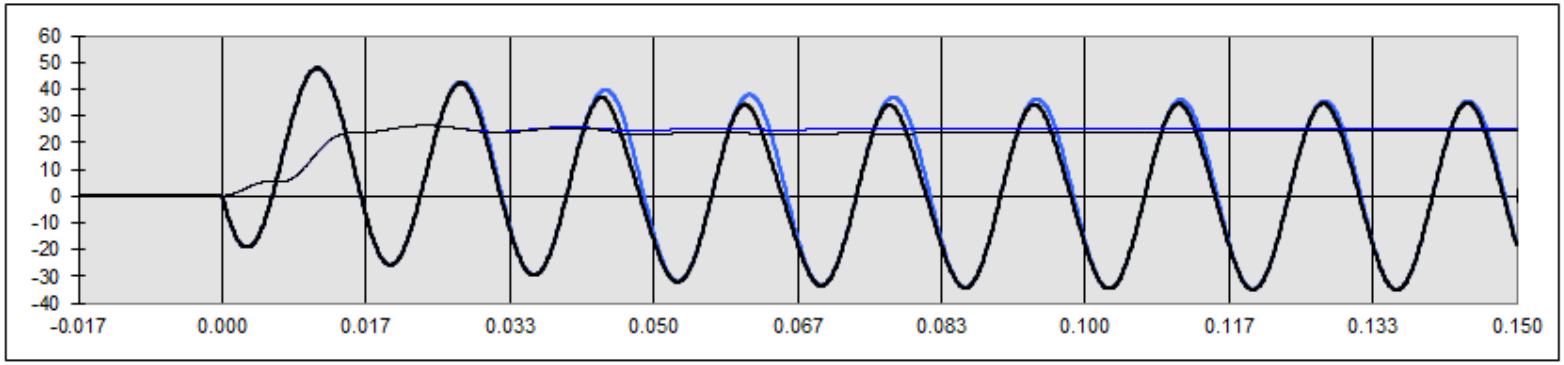

http://www.pes-psrc.org/Reports/CT_SAT%2010-01-03.zip

CT Performance:
200:5, C200, R=0.5, Offset = 0.5, 2000A

INPUT PARAMETERS:

		ENTER:	
Inverse of sat. curve slope =	S =	22	---
RMS voltage at 10A exc. current =	Vs =	200	volts rms
Turns ratio = n2/1=	N =	40	---
Winding resistance =	Rw =	0.300	ohms
Burden resistance =	Rb =	0.500	ohms
Burden reactance =	Xb =	0.500	ohms
System X/R ratio =	XoverR =	12.0	---
Per unit offset in primary current =	Off =	0.50	-1<Off<1
Per unit remanence (based on Vs) =	λrem	0.50	---
Symmetrical primary fault current =	Ip =	2,000	amps rms

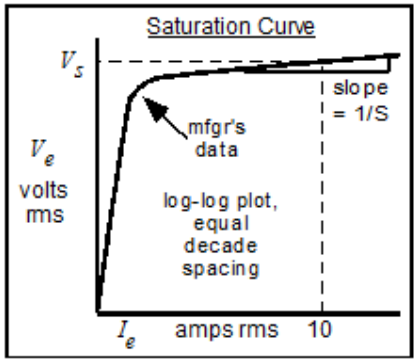

CALCULATED:

Rt =	Total burden resistance = Rw + Rb =	0.800	ohms
pf =	Total burden power factor =	0.848	---
Zb =	Total burden impedance =	0.943	ohms
Tau1 =	System time constant =	0.032	seconds
Lamsat =	Peak flux-linkages corresponding to Vs	0.750	Wb-turns
ω =	Radian freq =	376.99	rad/s
RP =	Rms-to-peak ratio =	0.34584	
A =	Coefficient in instantaneous ie versus lambda curve: ie = A * l^S :	1.61E+04	---
dt =	Time step =	0.000083	seconds
Lb =	Burden inductance =	0.00133	henries

Thick lines: **Ideal (blue)** and **actual (black)** secondary current in amps vs time in seconds.
Thin lines: **Ideal (blue)** and **actual (black)** secondary current extracted fundamental rms value, using a simple DFT with a one-cycle window.

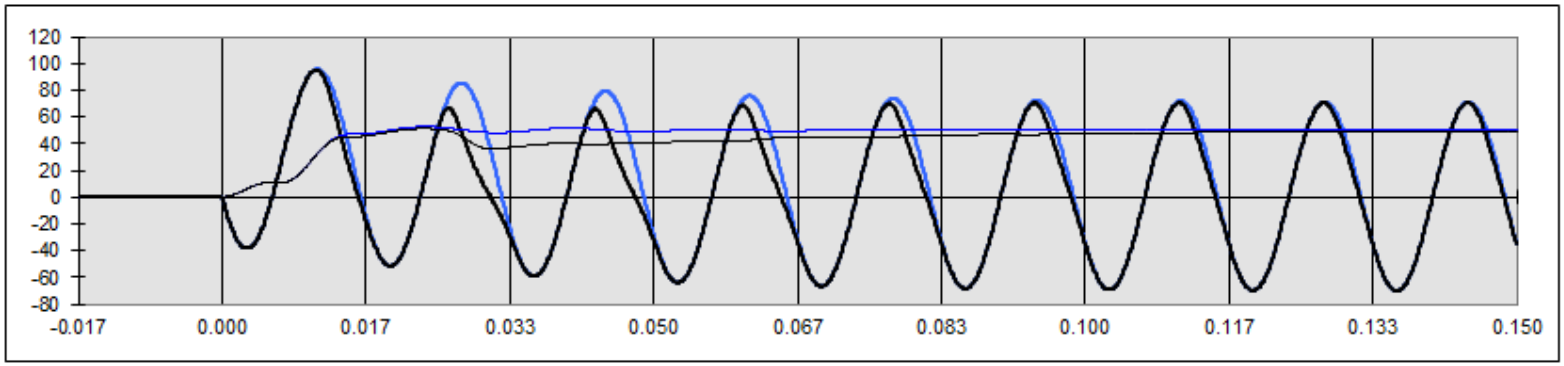

http://www.pes-psrc.org/Reports/CT_SAT%2010-01-03.zip

CT Performance:
200:5, C200, R=0.5, Offset = 0.75, 2000A

INPUT PARAMETERS:

		ENTER:	
Inverse of sat. curve slope =	S =	22	---
RMS voltage at 10A exc. current =	Vs =	200	volts rms
Turns ratio = n2/1=	N =	40	---
Winding resistance =	Rw =	0.300	ohms
Burden resistance =	Rb =	0.500	ohms
Burden reactance =	Xb =	0.500	ohms
System X/R ratio =	XoverR =	12.0	---
Per unit offset in primary current =	Off =	0.75	-1<Off<1
Per unit remanence (based on Vs) =	λrem	0.50	---
Symmetrical primary fault current =	Ip =	2,000	amps rms

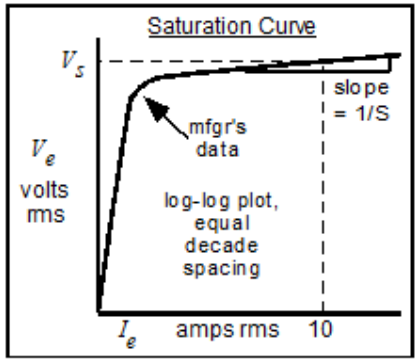

CALCULATED:

Rt =	Total burden resistance = Rw + Rb =	0.800	ohms
pf =	Total burden power factor =	0.848	---
Zb =	Total burden impedance =	0.943	ohms
Tau1 =	System time constant =	0.032	seconds
Lamsat =	Peak flux-linkages corresponding to Vs	0.750	Wb-turns
ω =	Radian freq =	376.99	rad/s
RP =	Rms-to-peak ratio =	0.34584	
A =	Coefficient in instantaneous ie versus lambda curve: ie = A * l^S :	1.61E+04	---
dt =	Time step =	0.000083	seconds
Lb =	Burden inductance =	0.00133	henries

Thick lines: **Ideal (blue)** and **actual (black)** secondary current in amps vs time in seconds.
Thin lines: **Ideal (blue)** and **actual (black)** secondary current extracted fundamental rms value, using a simple DFT with a one-cycle window.

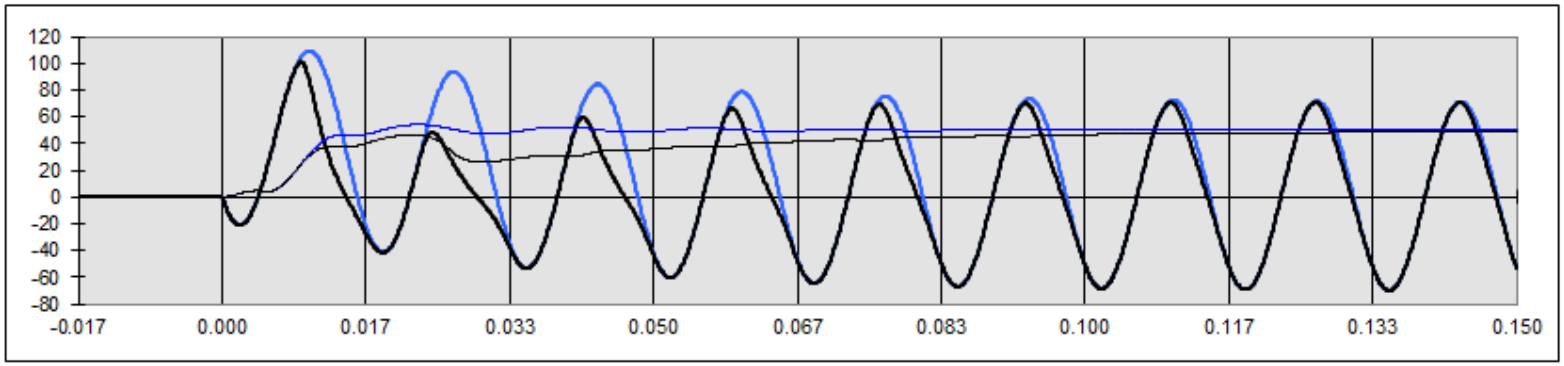

http://www.pes-psrc.org/Reports/CT_SAT%2010-01-03.zip

CT Performance:
200:5, C200, R=0.75, Offset = 0.75, 2000A

INPUT PARAMETERS:

		ENTER:	
Inverse of sat. curve slope =	S =	22	---
RMS voltage at 10A exc. current =	Vs =	200	volts rms
Turns ratio = n2/1=	N =	40	---
Winding resistance =	Rw =	0.300	ohms
Burden resistance =	Rb =	0.500	ohms
Burden reactance =	Xb =	0.500	ohms
System X/R ratio =	XoverR =	12.0	---
Per unit offset in primary current =	Off =	0.75	-1<Off<1
Per unit remanence (based on Vs) =	λrem	0.75	---
Symmetrical primary fault current =	Ip =	2,000	amps rms

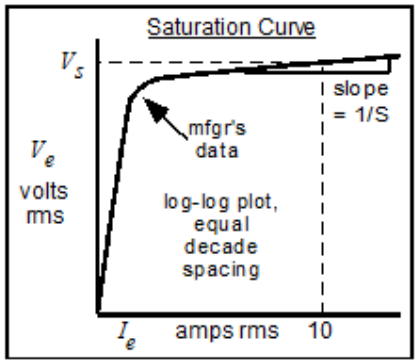

CALCULATED:

Rt =	Total burden resistance = Rw + Rb =	0.800	ohms
pf =	Total burden power factor =	0.848	---
Zb =	Total burden impedance =	0.943	ohms
Tau1 =	System time constant =	0.032	seconds
Lamsat =	Peak flux-linkages corresponding to Vs	0.750	Wb-turns
ω =	Radian freq =	376.99	rad/s
RP =	Rms-to-peak ratio =	0.34584	
A =	Coefficient in instantaneous ie versus lambda curve: ie = A * l^S :	1.61E+04	---
dt =	Time step =	0.000083	seconds
Lb =	Burden inductance =	0.00133	henries

Thick lines: **Ideal (blue)** and **actual (black)** secondary current in amps vs time in seconds.
Thin lines: **Ideal (blue)** and **actual (black)** secondary current extracted fundamental rms value, using a simple DFT with a one-cycle window.

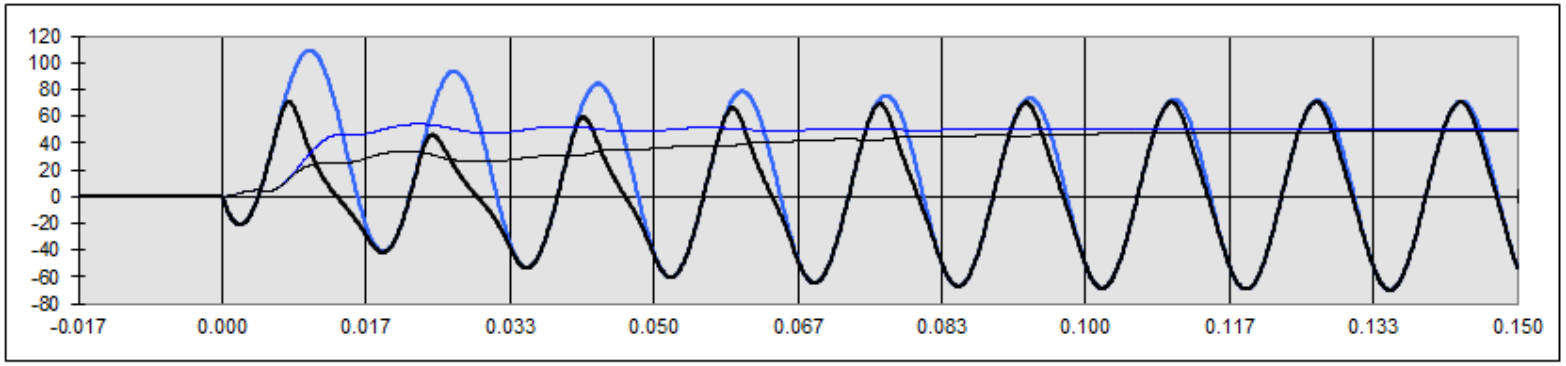

http://www.pes-psrc.org/Reports/CT_SAT%2010-01-03.zip

CT Performance:
400:5, C400, R=0.5, Offset = 0.5, 2000A

INPUT PARAMETERS:

		ENTER:	
Inverse of sat. curve slope =	S =	22	---
RMS voltage at 10A exc. current =	Vs =	400	volts rms
Turns ratio = n2/1=	N =	80	---
Winding resistance =	Rw =	0.300	ohms
Burden resistance =	Rb =	0.500	ohms
Burden reactance =	Xb =	0.500	ohms
System X/R ratio =	XoverR =	12.0	---
Per unit offset in primary current =	Off =	0.50	-1<Off<1
Per unit remanence (based on Vs) =	λrem	0.50	---
Symmetrical primary fault current =	Ip =	2,000	amps rms

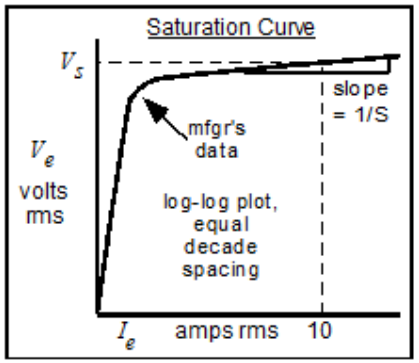

CALCULATED:

Rt =	Total burden resistance = Rw + Rb =	0.800	ohms
pf =	Total burden power factor =	0.848	---
Zb =	Total burden impedance =	0.943	ohms
Tau1 =	System time constant =	0.032	seconds
Lamsat =	Peak flux-linkages corresponding to Vs	1.501	Wb-turns
ω =	Radian freq =	376.99	rad/s
RP =	Rms-to-peak ratio =	0.34584	
A =	Coefficient in instantaneous ie versus lambda curve: ie = A * l^S :	3.83E-03	---
dt =	Time step =	0.000083	seconds
Lb =	Burden inductance =	0.00133	henries

Thick lines: **Ideal (blue)** and **actual (black)** secondary current in amps vs time in seconds.
Thin lines: **Ideal (blue)** and **actual (black)** secondary current extracted fundamental rms value, using a simple DFT with a one-cycle window.

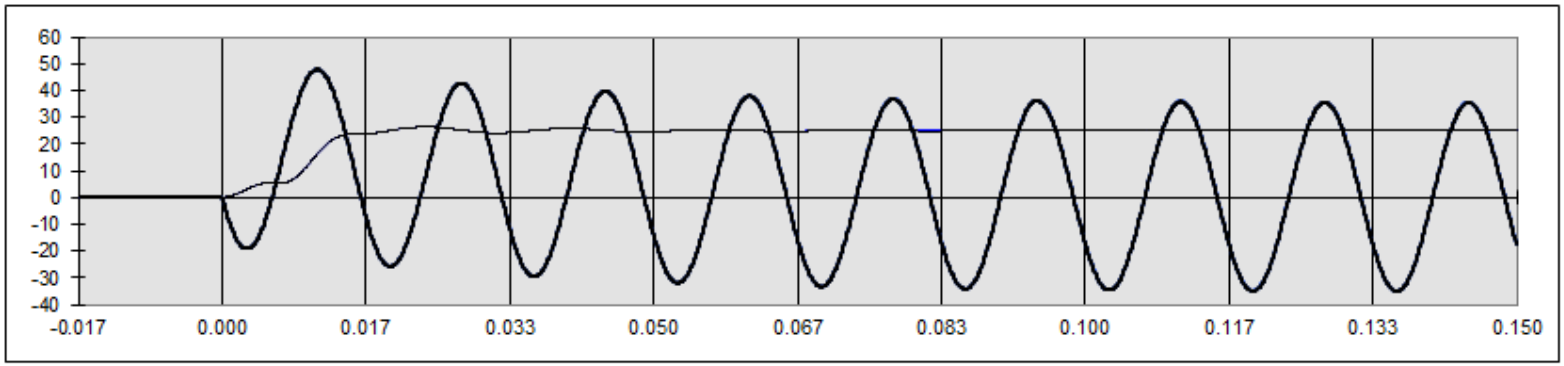

http://www.pes-psrc.org/Reports/CT_SAT%2010-01-03.zip

CT Performance:
400:5, C400, R=0.5, Offset = 0.5, 4000A

INPUT PARAMETERS:

		ENTER:	
Inverse of sat. curve slope =	S =	22	---
RMS voltage at 10A exc. current =	Vs =	400	volts rms
Turns ratio = n2/1=	N =	80	---
Winding resistance =	Rw =	0.300	ohms
Burden resistance =	Rb =	0.500	ohms
Burden reactance =	Xb =	0.500	ohms
System X/R ratio =	XoverR =	12.0	---
Per unit offset in primary current =	Off =	0.50	-1<Off<1
Per unit remanence (based on Vs) =	λrem	0.50	---
Symmetrical primary fault current =	Ip =	4,000	amps rms

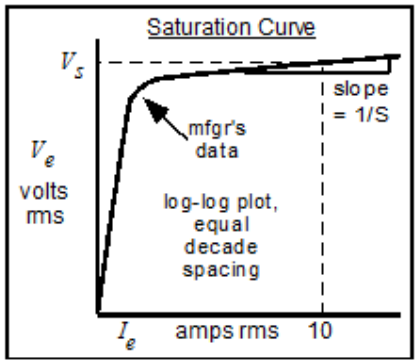

CALCULATED:

Rt =	Total burden resistance = Rw + Rb =	0.800	ohms
pf =	Total burden power factor =	0.848	---
Zb =	Total burden impedance =	0.943	ohms
Tau1 =	System time constant =	0.032	seconds
Lamsat =	Peak flux-linkages corresponding to Vs	1.501	Wb-turns
ω =	Radian freq =	376.99	rad/s
RP =	Rms-to-peak ratio =	0.34584	
A =	Coefficient in instantaneous ie versus lambda curve: ie = A * l^S :	3.83E-03	---
dt =	Time step =	0.000083	seconds
Lb =	Burden inductance =	0.00133	henries

Thick lines: Ideal (blue) and **actual (black)** secondary current in amps vs time in seconds.
Thin lines: Ideal (blue) and **actual (black)** secondary current extracted fundamental rms value, using a simple DFT with a one-cycle window.

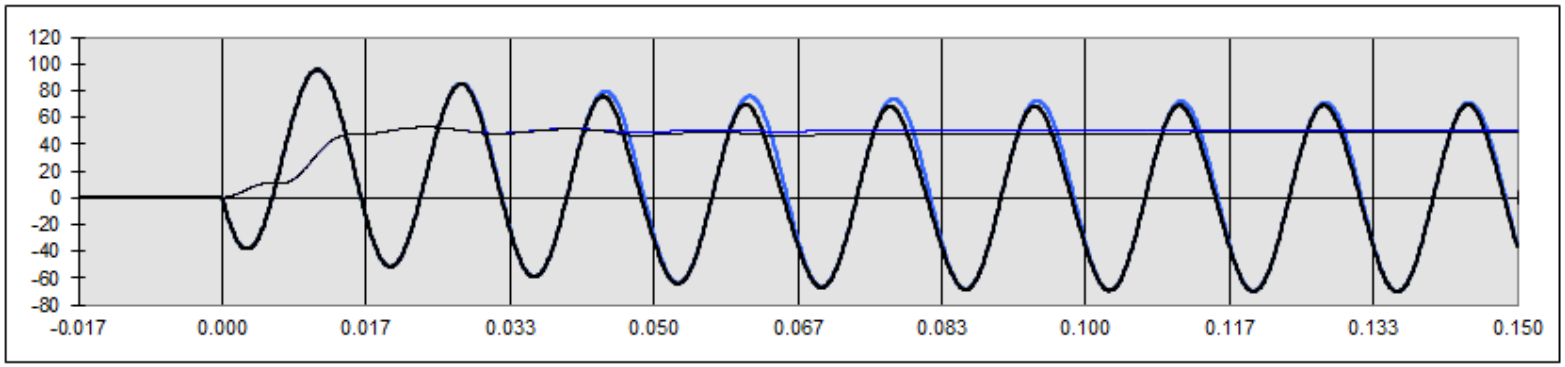

http://www.pes-psrc.org/Reports/CT_SAT%2010-01-03.zip

CT Performance:
400:5, C400, R=0.5, Offset = 0.5, 8000A

INPUT PARAMETERS:

		ENTER:	
Inverse of sat. curve slope =	S =	22	---
RMS voltage at 10A exc. current =	Vs =	400	volts rms
Turns ratio = n2/1=	N =	80	---
Winding resistance =	Rw =	0.300	ohms
Burden resistance =	Rb =	0.500	ohms
Burden reactance =	Xb =	0.500	ohms
System X/R ratio =	XoverR =	12.0	---
Per unit offset in primary current =	Off =	0.50	-1<Off<1
Per unit remanence (based on Vs) =	λrem	0.50	---
Symmetrical primary fault current =	Ip =	8,000	amps rms

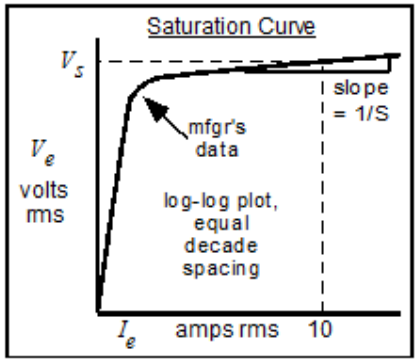

CALCULATED:

Rt =	Total burden resistance = Rw + Rb =	0.800	ohms
pf =	Total burden power factor =	0.848	---
Zb =	Total burden impedance =	0.943	ohms
Tau1 =	System time constant =	0.032	seconds
Lamsat =	Peak flux-linkages corresponding to Vs	1.501	Wb-turns
ω =	Radian freq =	376.99	rad/s
RP =	Rms-to-peak ratio =	0.34584	
A =	Coefficient in instantaneous ie versus lambda curve: ie = A * l^S :	3.83E-03	---
dt =	Time step =	0.000083	seconds
Lb =	Burden inductance =	0.00133	henries

Thick lines: **Ideal (blue)** and **actual (black)** secondary current in amps vs time in seconds.
Thin lines: **Ideal (blue)** and **actual (black)** secondary current extracted fundamental rms value, using a simple DFT with a one-cycle window.

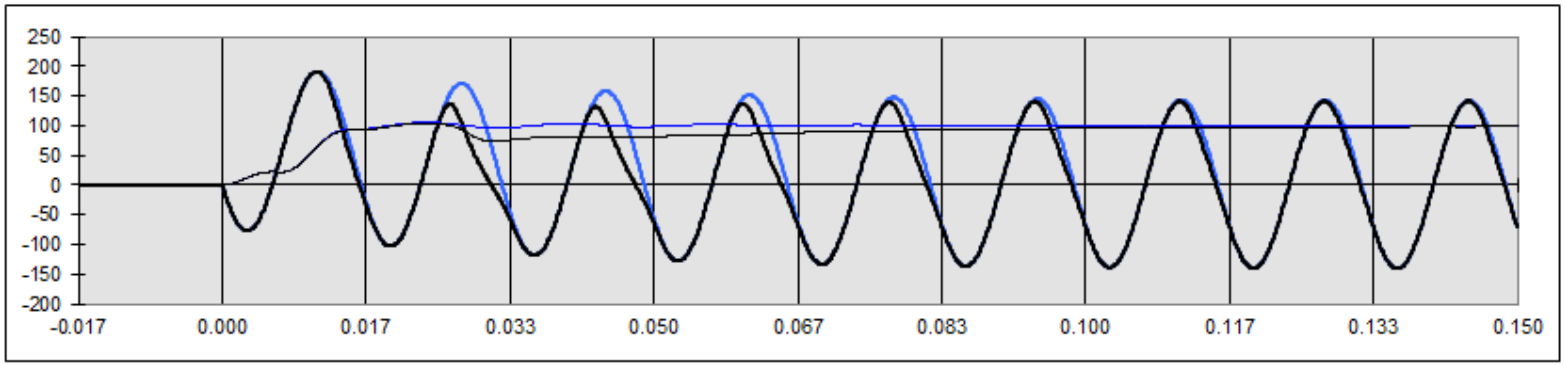

http://www.pes-psrc.org/Reports/CT_SAT%2010-01-03.zip

CT Performance:
400:5, C400, R=0.5, Offset = 0.75, 8000A

INPUT PARAMETERS:

		ENTER:	
Inverse of sat. curve slope =	S =	22	---
RMS voltage at 10A exc. current =	Vs =	400	volts rms
Turns ratio = n2/1=	N =	80	---
Winding resistance =	Rw =	0.300	ohms
Burden resistance =	Rb =	0.500	ohms
Burden reactance =	Xb =	0.500	ohms
System X/R ratio =	XoverR =	12.0	---
Per unit offset in primary current =	Off =	0.75	-1<Off<1
Per unit remanence (based on Vs) =	λrem	0.50	---
Symmetrical primary fault current =	Ip =	8,000	amps rms

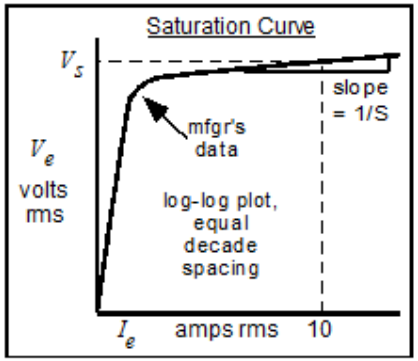

CALCULATED:

Rt =	Total burden resistance = Rw + Rb =	0.800	ohms
pf =	Total burden power factor =	0.848	---
Zb =	Total burden impedance =	0.943	ohms
Tau1 =	System time constant =	0.032	seconds
Lamsat =	Peak flux-linkages corresponding to Vs	1.501	Wb-turns
ω =	Radian freq =	376.99	rad/s
RP =	Rms-to-peak ratio =	0.34584	
A =	Coefficient in instantaneous ie versus lambda curve: ie = A * l^S :	3.83E-03	---
dt =	Time step =	0.000083	seconds
Lb =	Burden inductance =	0.00133	henries

Thick lines: **Ideal (blue)** and **actual (black)** secondary current in amps vs time in seconds.
Thin lines: **Ideal (blue)** and **actual (black)** secondary current extracted fundamental rms value, using a simple DFT with a one-cycle window.

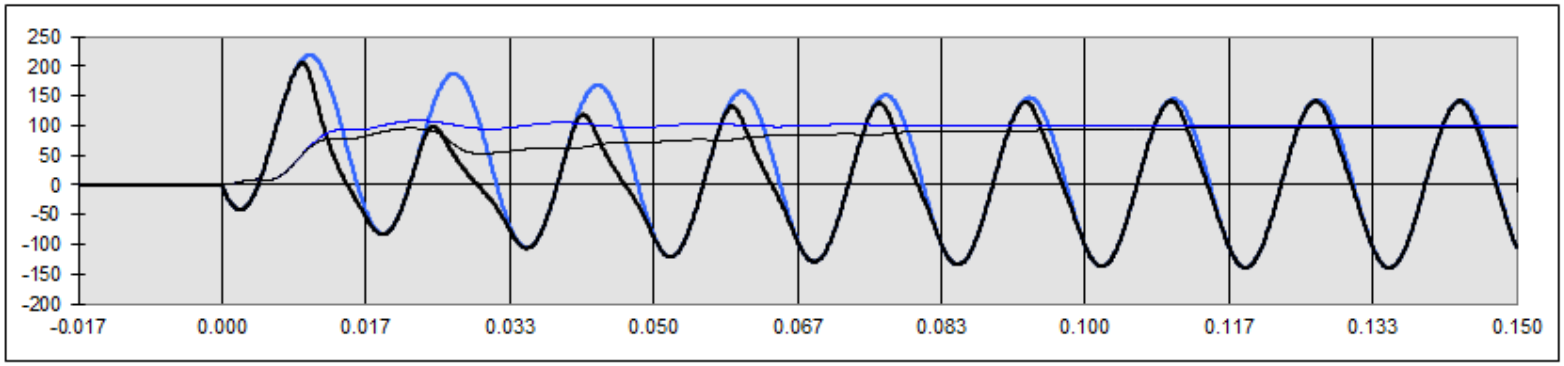

http://www.pes-psrc.org/Reports/CT_SAT%2010-01-03.zip

CT Performance:
400:5, C400, R=0.75, Offset = 0.75, 8000A

INPUT PARAMETERS:

		ENTER:	
Inverse of sat. curve slope =	S =	22	---
RMS voltage at 10A exc. current =	Vs =	400	volts rms
Turns ratio = n2/1=	N =	80	---
Winding resistance =	Rw =	0.300	ohms
Burden resistance =	Rb =	0.500	ohms
Burden reactance =	Xb =	0.500	ohms
System X/R ratio =	XoverR =	12.0	---
Per unit offset in primary current =	Off =	0.75	-1<Off<1
Per unit remanence (based on Vs) =	λrem	0.75	---
Symmetrical primary fault current =	Ip =	8,000	amps rms

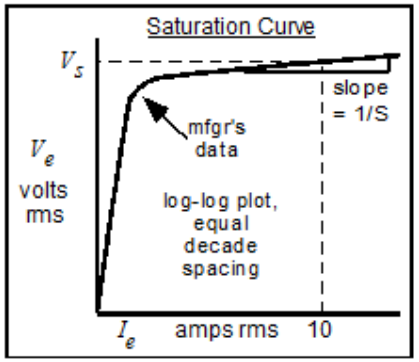

CALCULATED:

Rt =	Total burden resistance = Rw + Rb =	0.800	ohms
pf =	Total burden power factor =	0.848	---
Zb =	Total burden impedance =	0.943	ohms
Tau1 =	System time constant =	0.032	seconds
Lamsat =	Peak flux-linkages corresponding to Vs	1.501	Wb-turns
ω =	Radian freq =	376.99	rad/s
RP =	Rms-to-peak ratio =	0.34584	
A =	Coefficient in instantaneous ie versus lambda curve: ie = A * l^S :	3.83E-03	---
dt =	Time step =	0.000083	seconds
Lb =	Burden inductance =	0.00133	henries

Thick lines: **Ideal (blue)** and **actual (black)** secondary current in amps vs time in seconds.
Thin lines: **Ideal (blue)** and **actual (black)** secondary current extracted fundamental rms value, using a simple DFT with a one-cycle window.

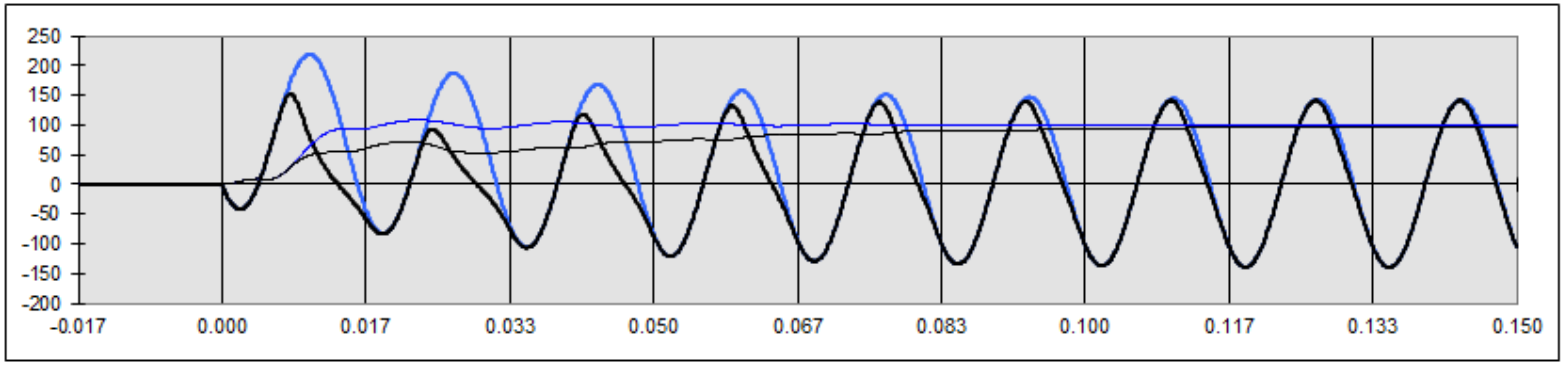

http://www.pes-psrc.org/Reports/CT_SAT%2010-01-03.zip

Application Considerations: Paralleling Sources

- When paralleling sources for differential protection, *beware*!
- Paralleled sources (not load, specifically sources) have different saturation characteristics and present the differential element input with corrupt values

- Consider through-fault on bus section
  - One CT saturates, the other does not
  - Result: Input is presented with "false difference" due to combining of CTs from different sources outside of relay

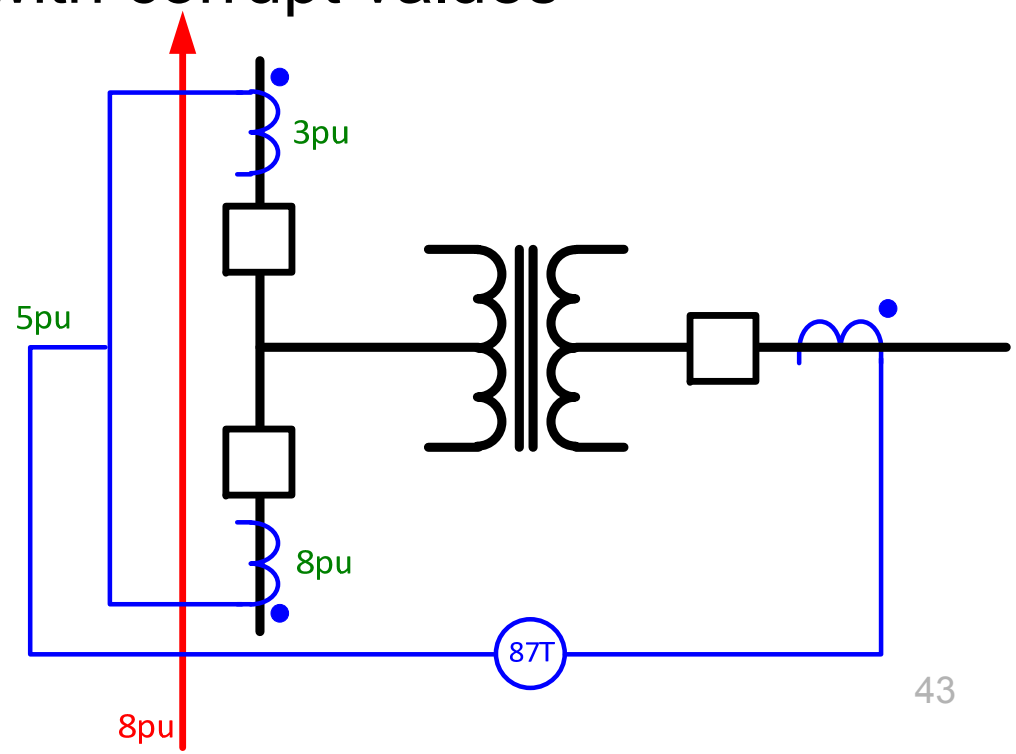

Differential Element Security Challenge

- The problem with external faults is the possibility of CT saturation making an external fault "look" internal to the differential relay element

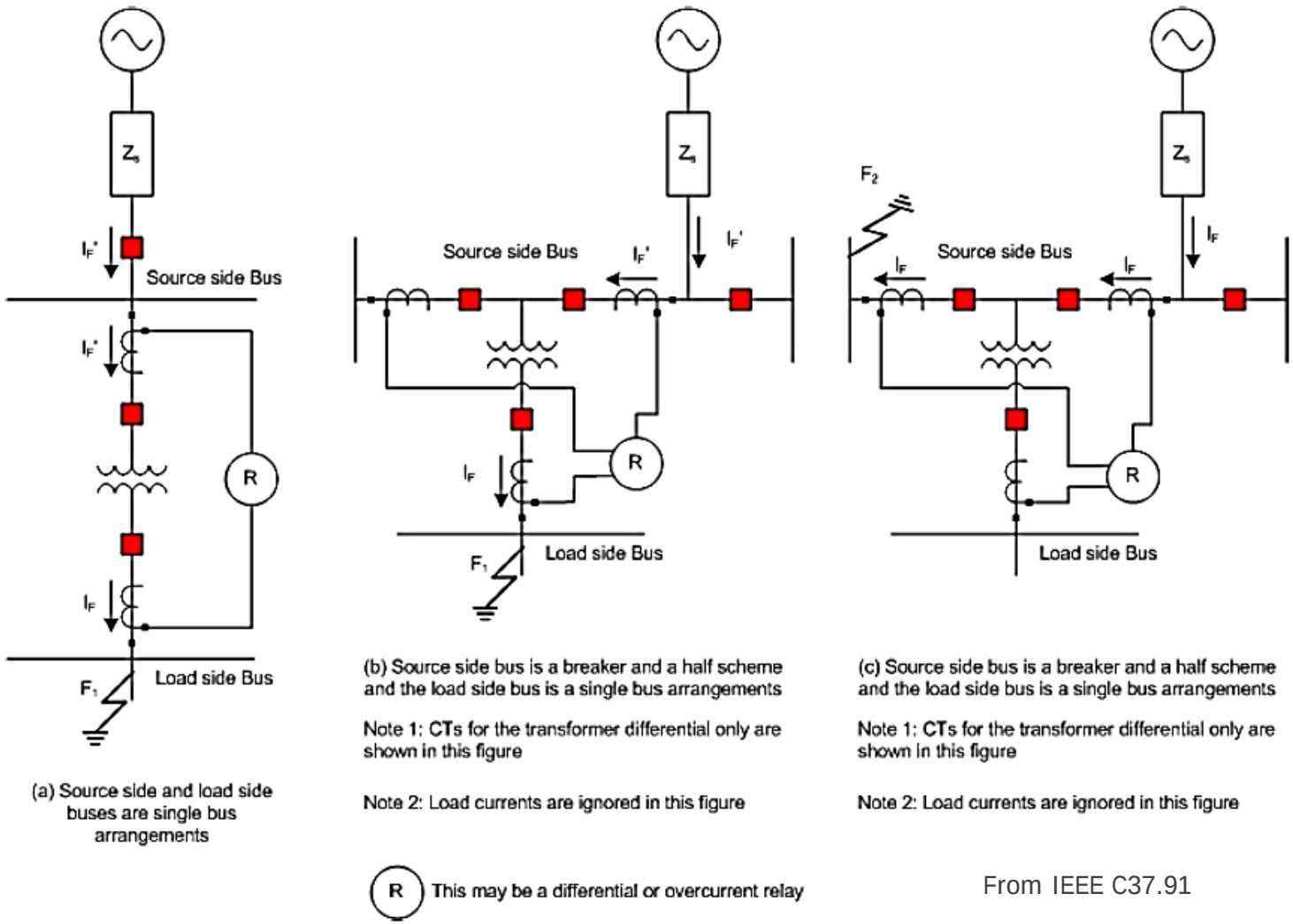

(a) Source side and load side buses are single bus arrangements

(b) Source side bus is a breaker and a half scheme and the load side bus is a single bus arrangements

Note 1: CTs for the transformer differential only are shown in this figure

Note 2: Load currents are ignored in this figure

(c) Source side bus is a breaker and a half scheme and the load side bus is a single bus arrangements

Note 1: CTs for the transformer differential only are shown in this figure

Note 2: Load currents are ignored in this figure

From IEEE C37.91

Classical Differential Compensation

- CT ratios must be selected to account for:
  - Transformer ratios
  - If delta or wye connected CTs are applied
  - Delta increases ratio by 1.73

- Delta CTs must be used to filter zero-sequence current on wye transformer windings

Classical Differential Compensation

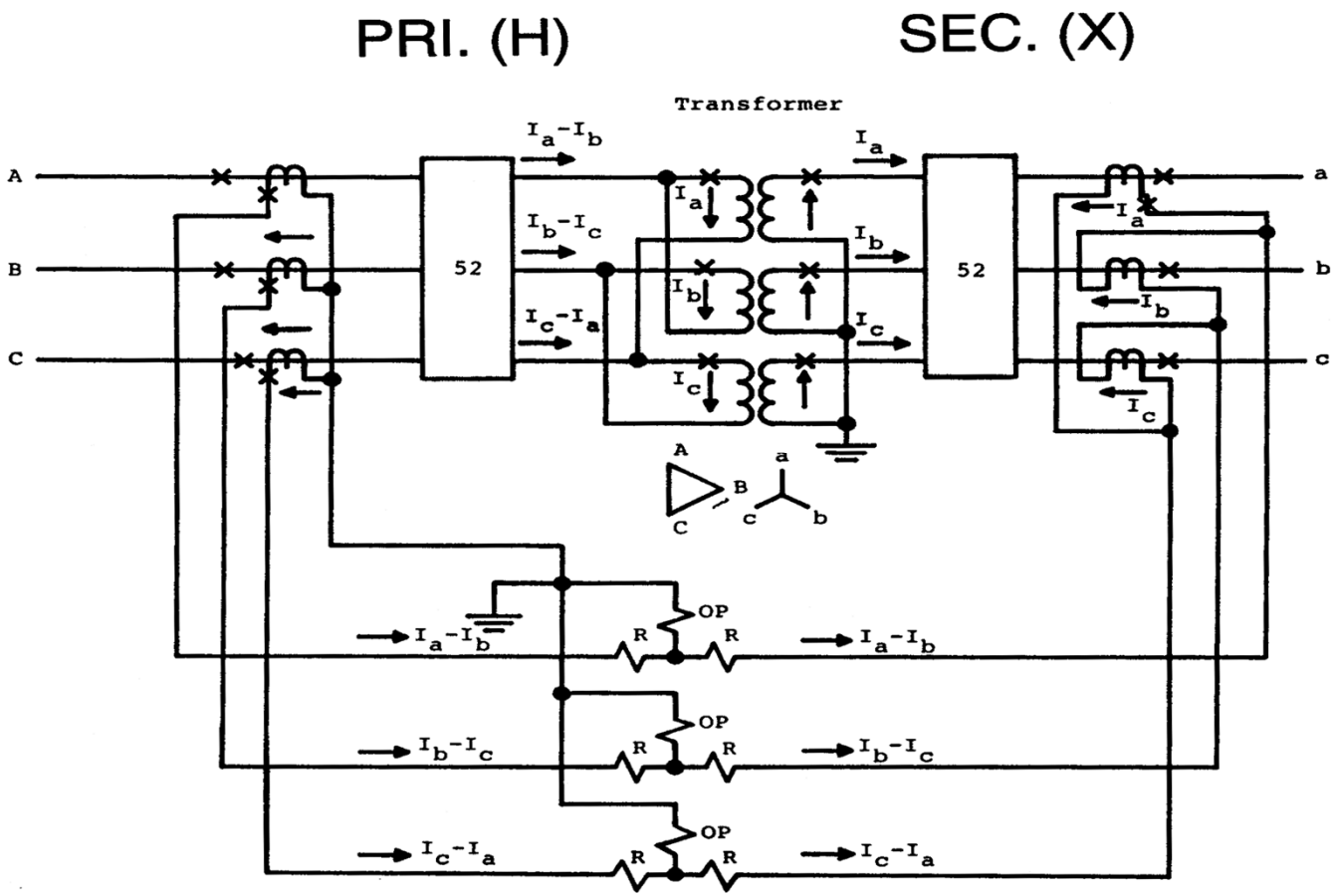

"Dab" as polarity of "A" connected to non-polarity of "B"

Bushing Nomenclature

- H1, H2, H3
  - Primary Bushings
- X1, X2, X3
  - Secondary Bushings

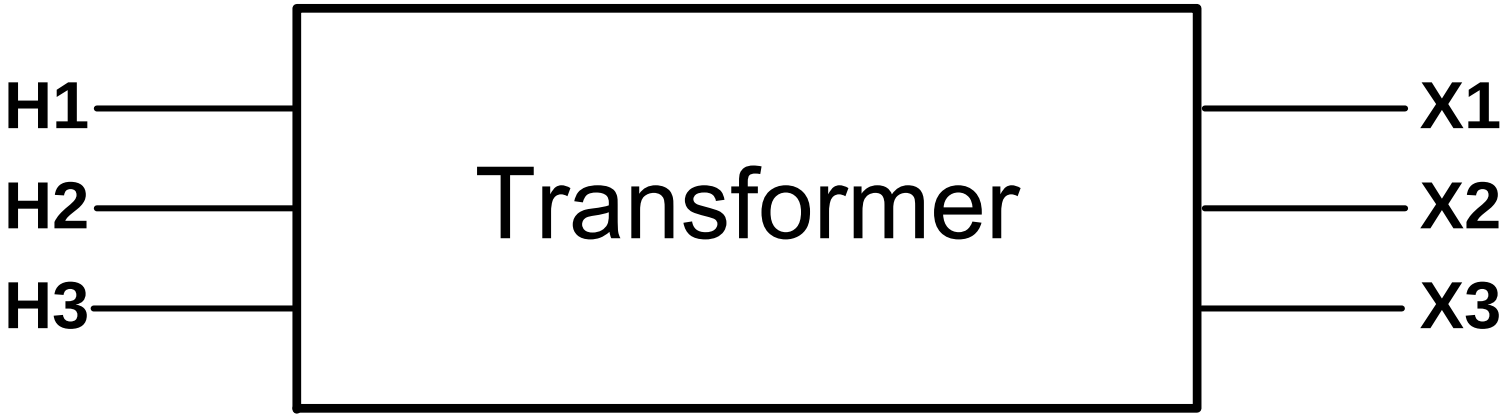

Wye-Wye	H1 and X1 at zero degrees
Delta-Delta	H1 and X1 at zero degrees
Delta-Wye	H1 lead X1 by 30 degrees
Wye-Delta	H1 lead X1 by 30 degrees

ANSI Standard

Angular Displacement

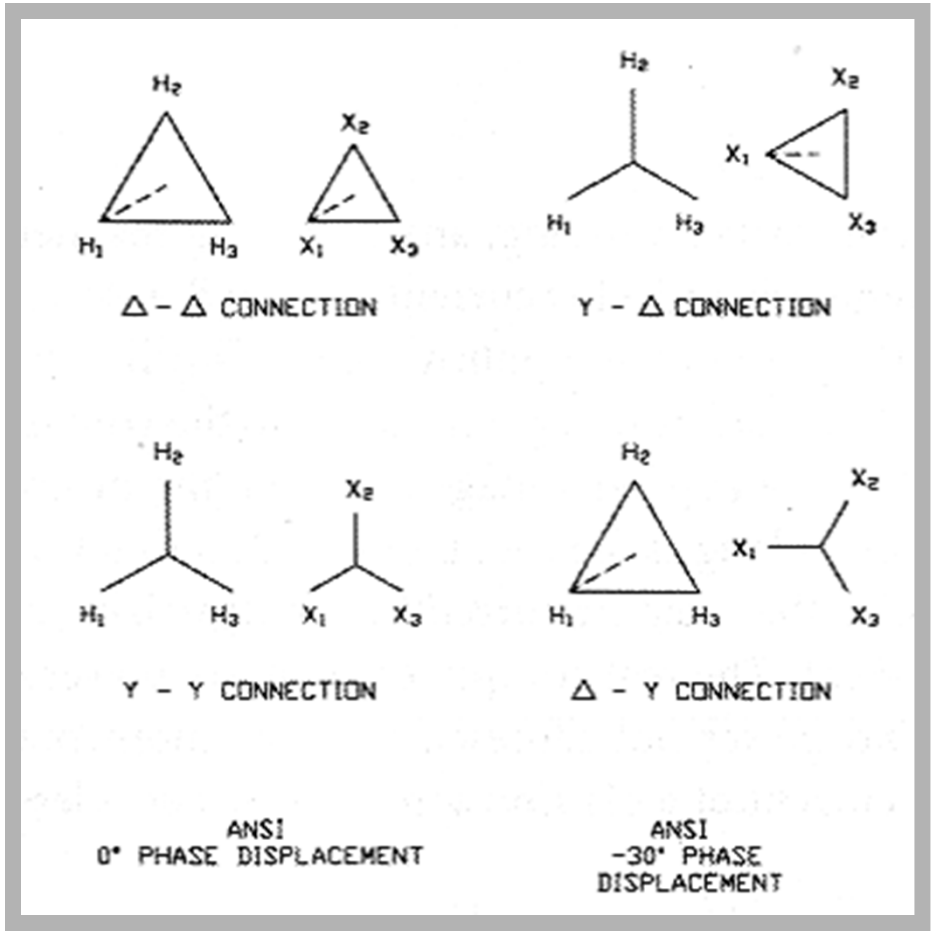

- ANSI Y-Y & Δ-Δ @ 0°
- ANSI Y-Δ & Δ-Y @ H1 lead X1 by 30° *or* X1 lag H1 by 30°

Winding Types and Impacts

- Wye-Wye
  - Cheaper than 2 winding if autobank
  - Conduct zero-sequence between circuits
  - Provides ground source for secondary circuit
- Delta-Delta
  - Blocks zero-sequence between circuits
  - Does not provide a ground source
- Delta-Wye
  - Blocks zero-sequence between circuits
  - Provides ground source for secondary circuit
- Wye-Delta
  - Blocks zero-sequence between circuits
  - Does not provide a ground source for secondary circuit

Winding Types

- Wye-Wye

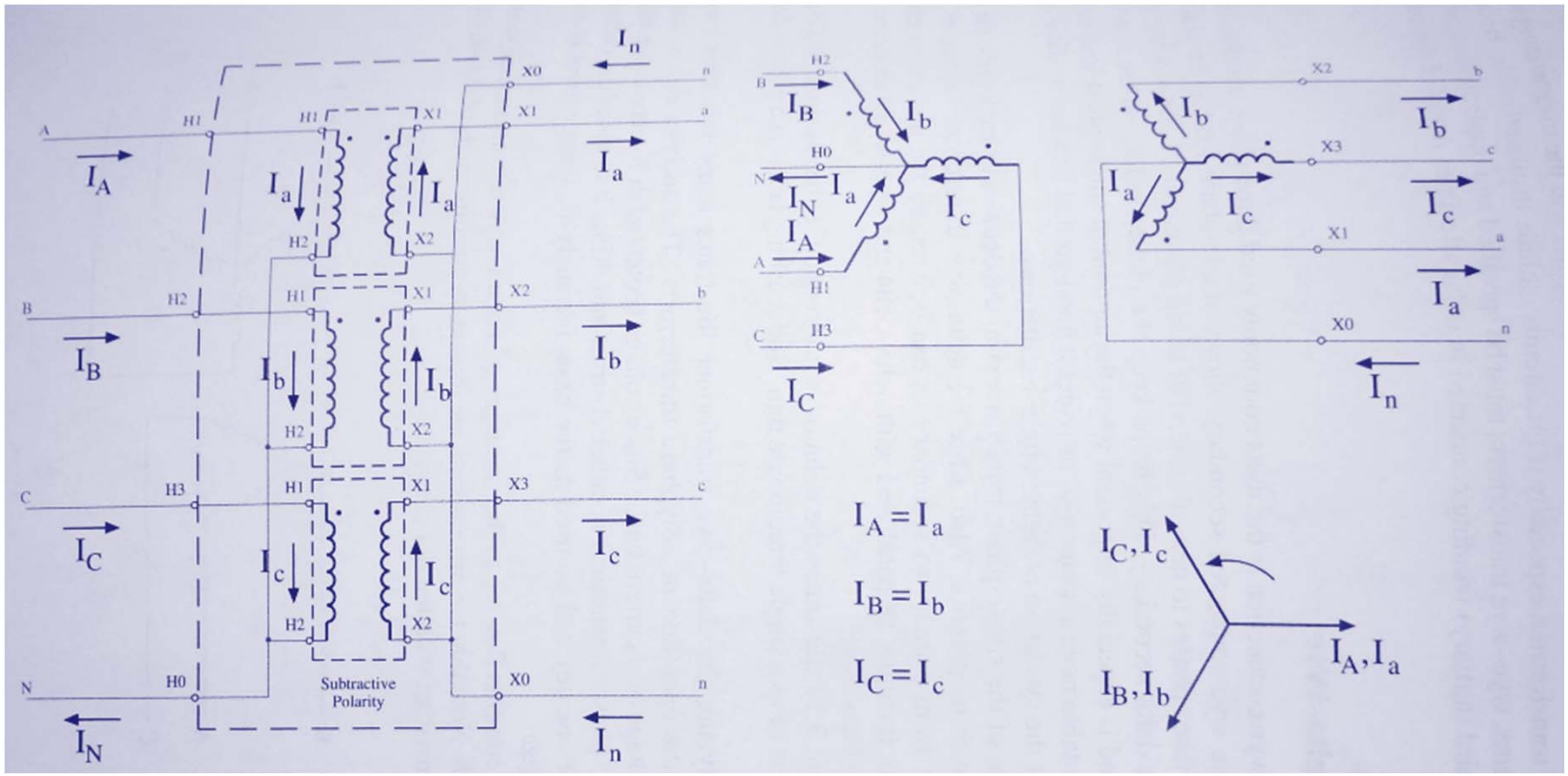

Winding Types

- Delta-Delta

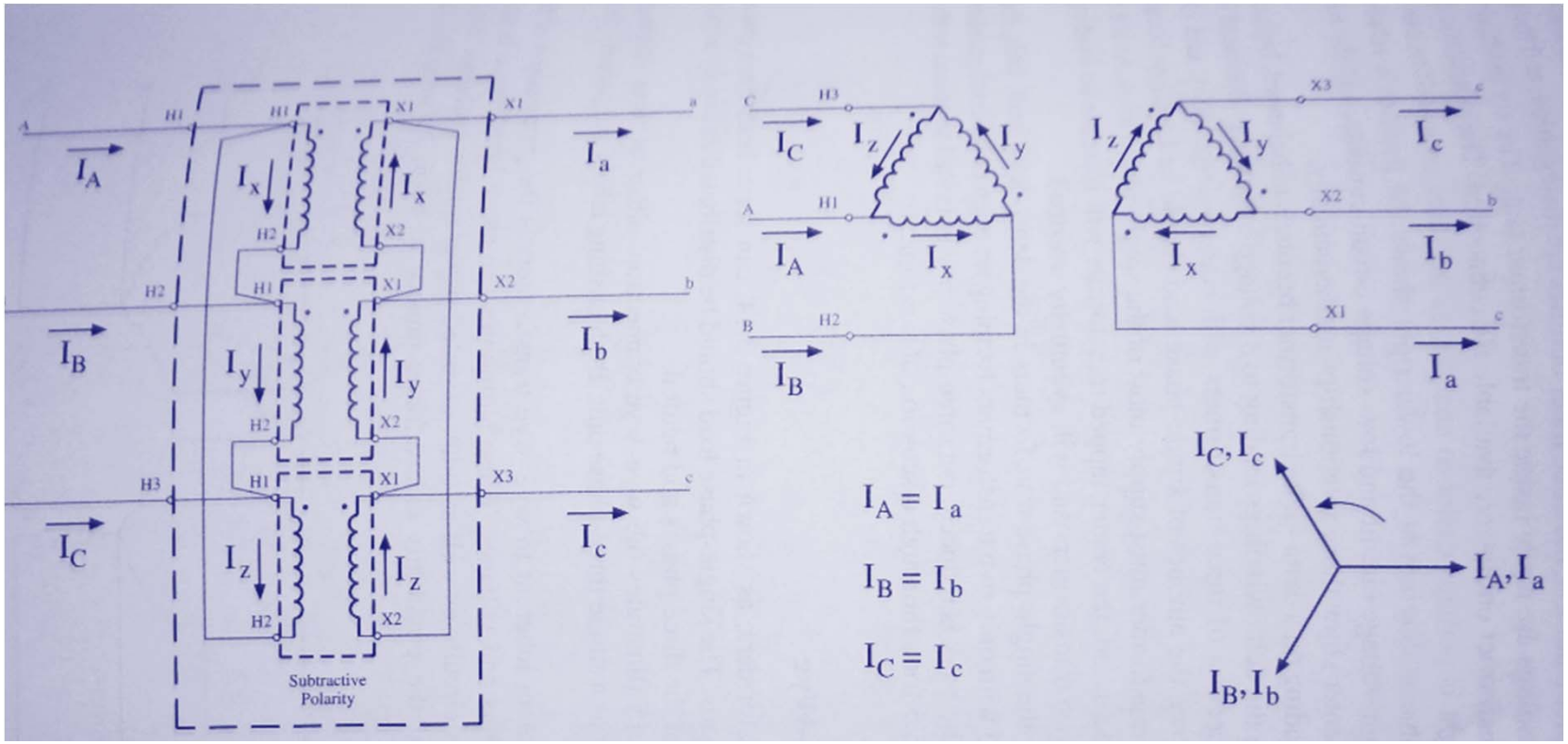

Winding Types

- Delta-Wye

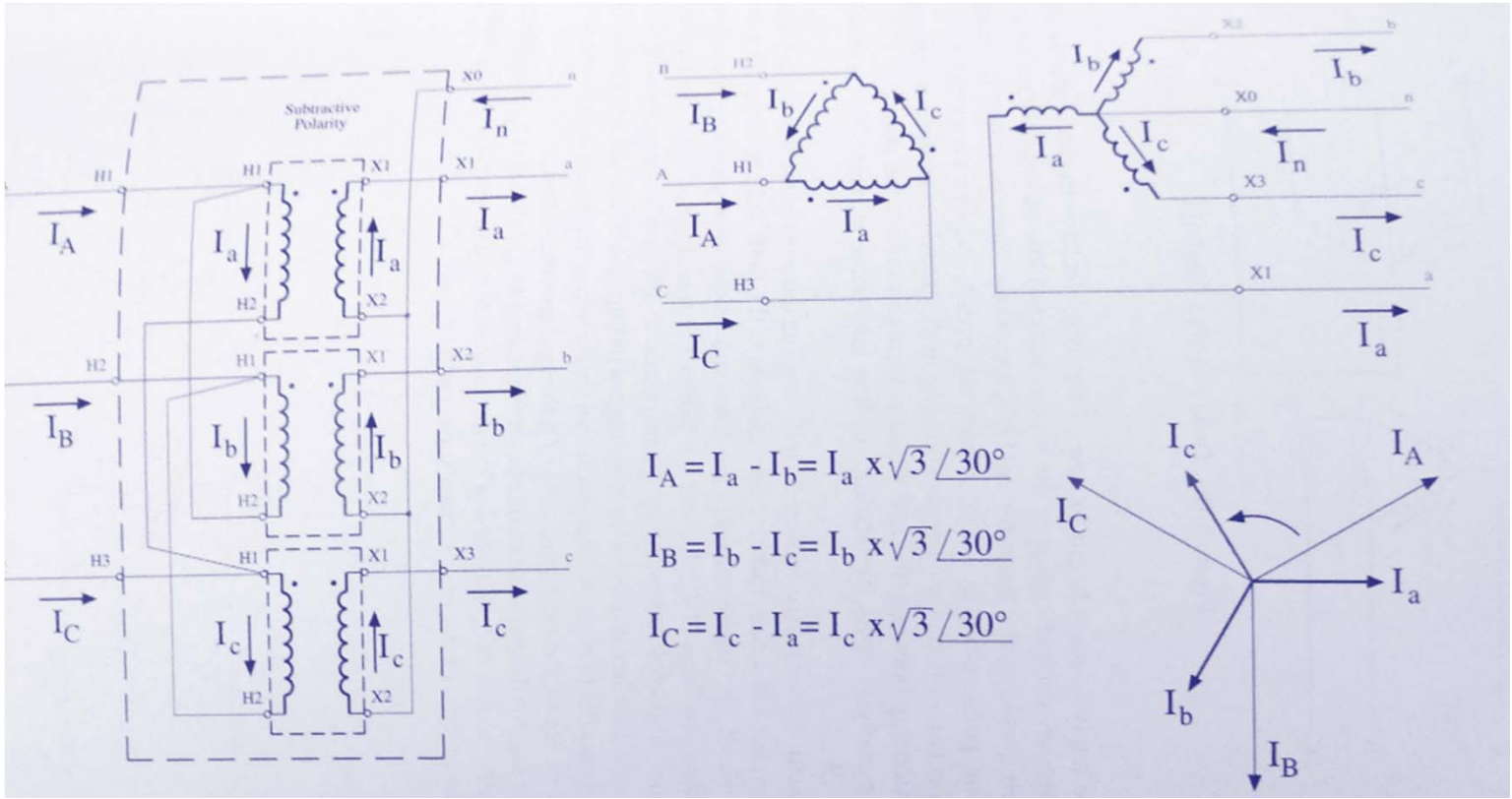

Winding Types

- Wye-Delta

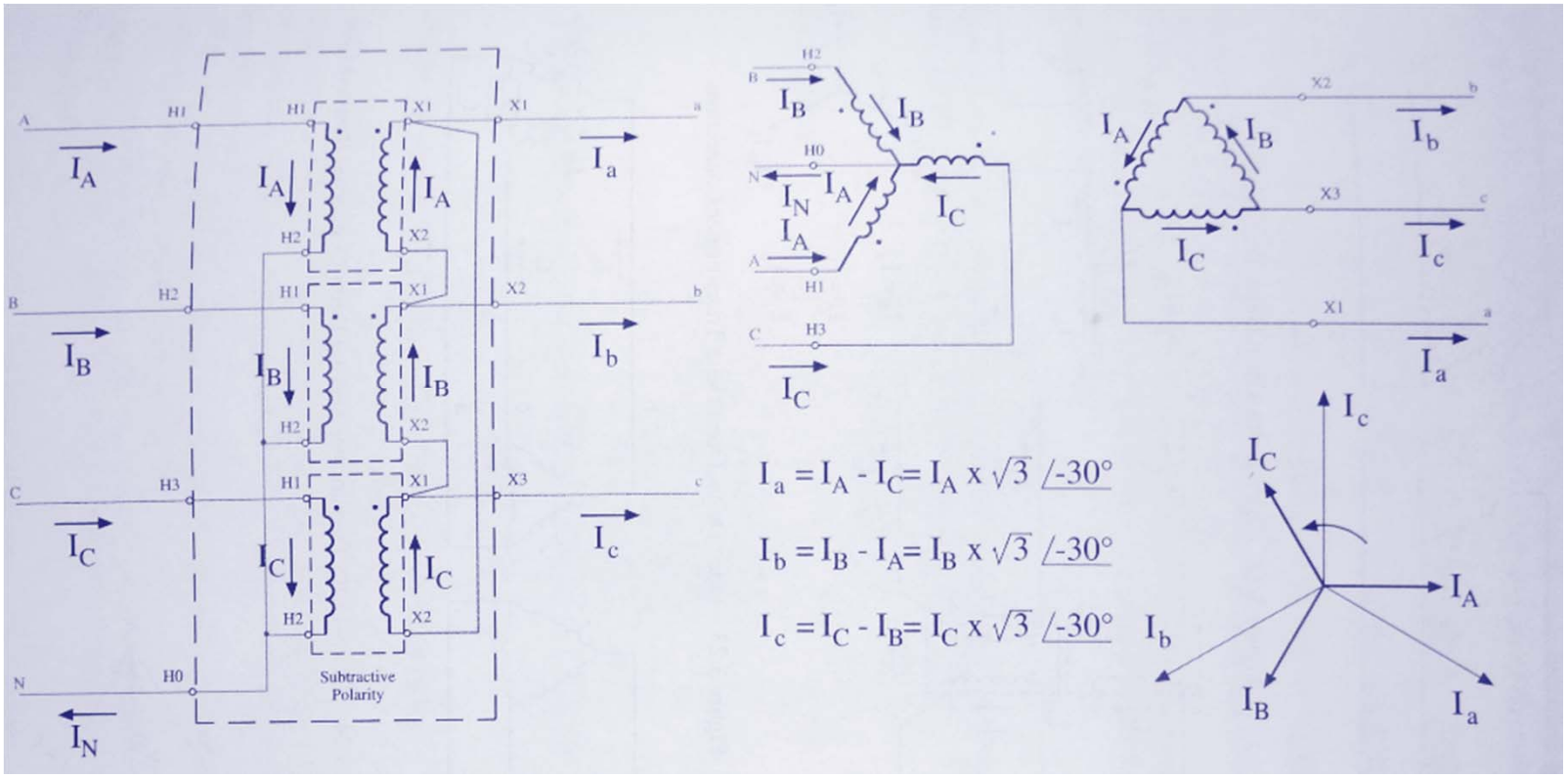

Compensation in Digital Relays

- Transformer ratio
- CT ratio
- Phase angle shift and $\sqrt{3}$ factor due to delta/wye connection
- Zero-sequence current filtering for wye windings so the differential quantities do not occur from external ground faults

Phase Angle Compensation in Numerical Relays

- Phase angle shift due to transformer connection in electromechanical and static relays is accomplished using appropriate connection of the CTs
- The phase angle shift in Numerical Relays can be compensated in software for any transformer with zero or 30° increments
- All CTs may be connected in WYE which allows the same CTs to be used for both metering and backup overcurrent functions
- Some numerical relays will allow for delta CTs to accommodate legacy upgrade applications

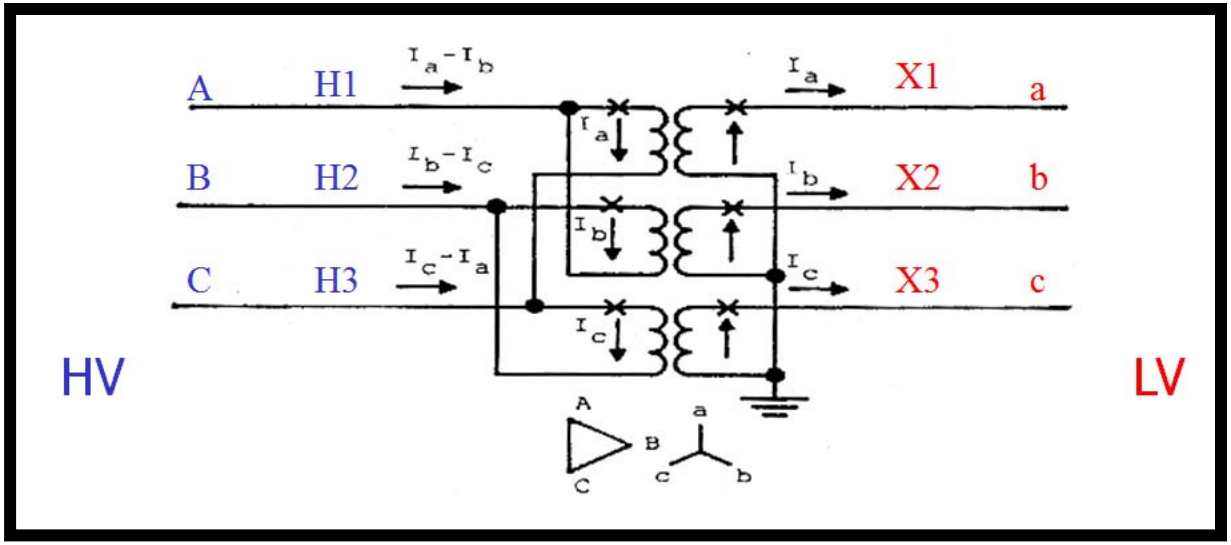

- Delta High Side, Wye Low Side
- High Lead Low by 30°
- Delta-Wye
- Delta (ab)
- Dy1
  - Dyn1

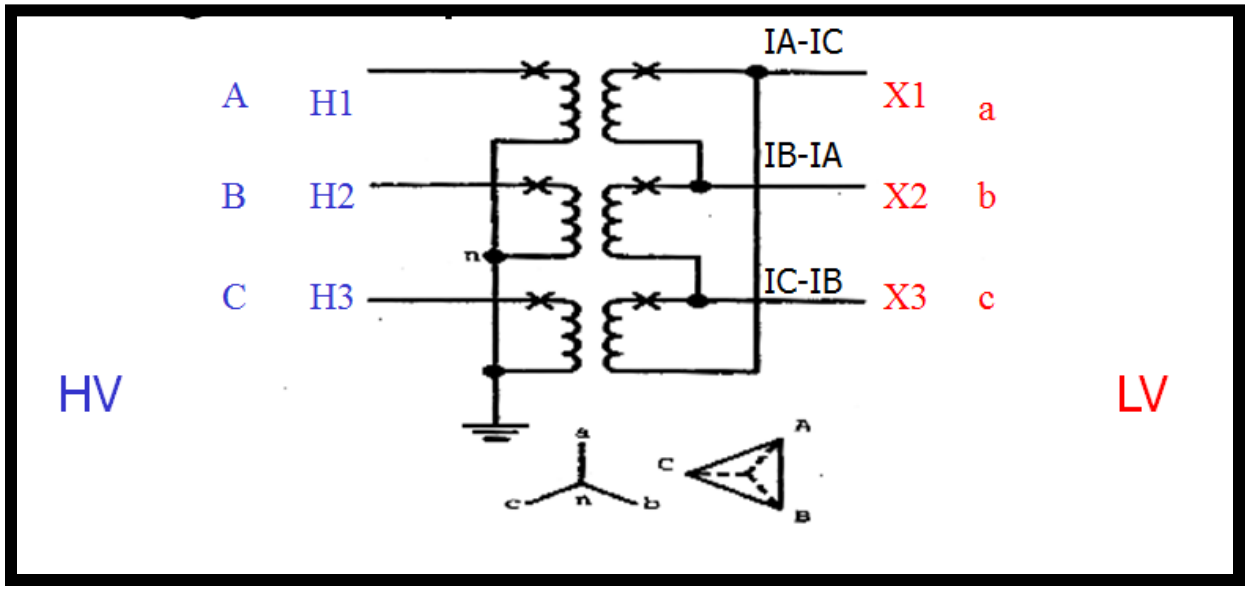

- Wye High Side, Delta Low Side
- High Lead Low by 30°
- Wye-Delta
- Delta (ac)
- Yd1
  - YNd1

Transformer Connection Bushing Nomenclature

IEC Connection Description	Symbol	Description	Symbol	Input Value	Symbol
Yy0		YY		Y Y 0 0	
Dd0		Dac Dac		Dac Dac 1 1	
Yd1		Y Dac		Y Dac 0 1	
Yd11		Y Dab		Y Dab 0 11	
Dy1		Dab Y		Dab Y 11 0	
Dy11		Dac Y		Dac Y 1 0	
Yd5		Y Inverse Dab		Y Inverse Dab 0 5	
Dy5		Dac Inverse Y		Dac Inverse Y 1 5	
Dd10		Dac Dab		Dac Dab 1 11	
Dz2		Dab Custom		Dab Wye 11 1	

Y-Y ANSI

Δ-Δ ANSI

Y-Δ ANSI

Δ-Y ANSI

- ANSI follows “zero phase shift”, or “high lead low by 30°”
- IEC designations use “low lags high by increments of 30° phase shift
- IEC uses various phase shifts in 30 increments
  - 30, 60, 90, 180, etc.

Digital Relay Application

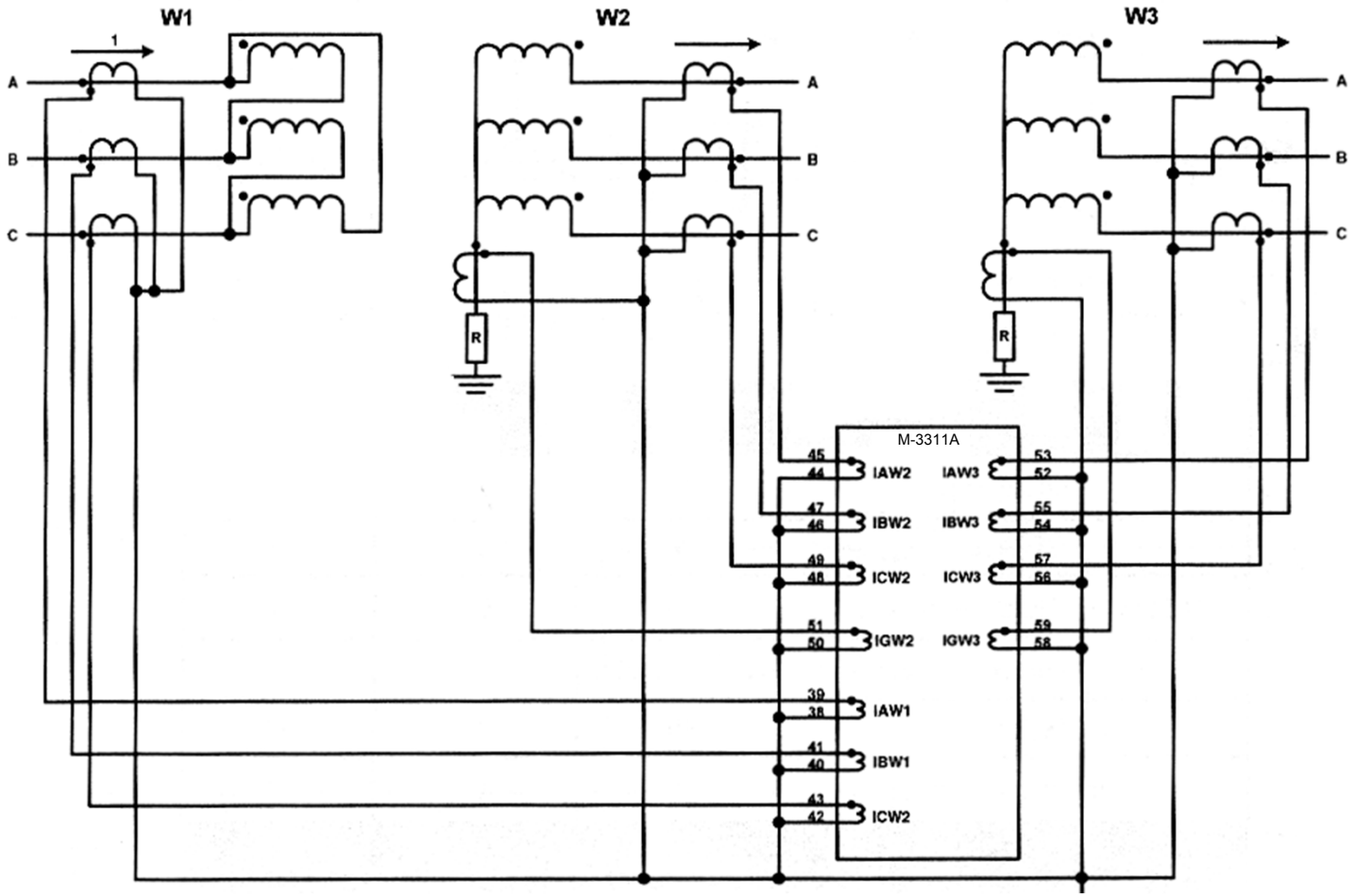

All WYE CTs shown

Benefits of Wye CTs

- Phase segregated line currents
  - Individual line current oscillography
  - Currents may be easily used for overcurrent protection and metering
  - Easier to commission and troubleshoot
  - Zero sequence elimination performed by calculation

<u>NOTE:</u>

- For protection upgrade applications where one wants to keep the existing wiring, the relay must:
  - Accept either delta or wye CTs
  - For delta CTs, recalculate the phase currents for overcurrent functions

Application Adaptation

- **Challenge:** To be able to handle ANY combination of transformer winding arrangements *and* CT connection arrangements

- **Strategy:** Use a menu that contains EVERY possible combination

  - Set W1's transformer winding configuration and CT configuration
  - Set W2's transformer winding configuration and CT configuration
  - Set W3's transformer winding configuration and CT configuration
  - Set W4's transformer winding configuration and CT configuration

  - Standard or Custom Selection
    - Standard handles most arrangements, including all ANSI standard type
    - Custom allows any possible connections to be accommodated (Non-ANSI and legacy delta CTs)

  - Relay selects the proper currents to use, directly or through vector subtraction
  - Relay applies √3 factor if required
  - Relay applies zero sequence filtering if required

Compensation: Base Model

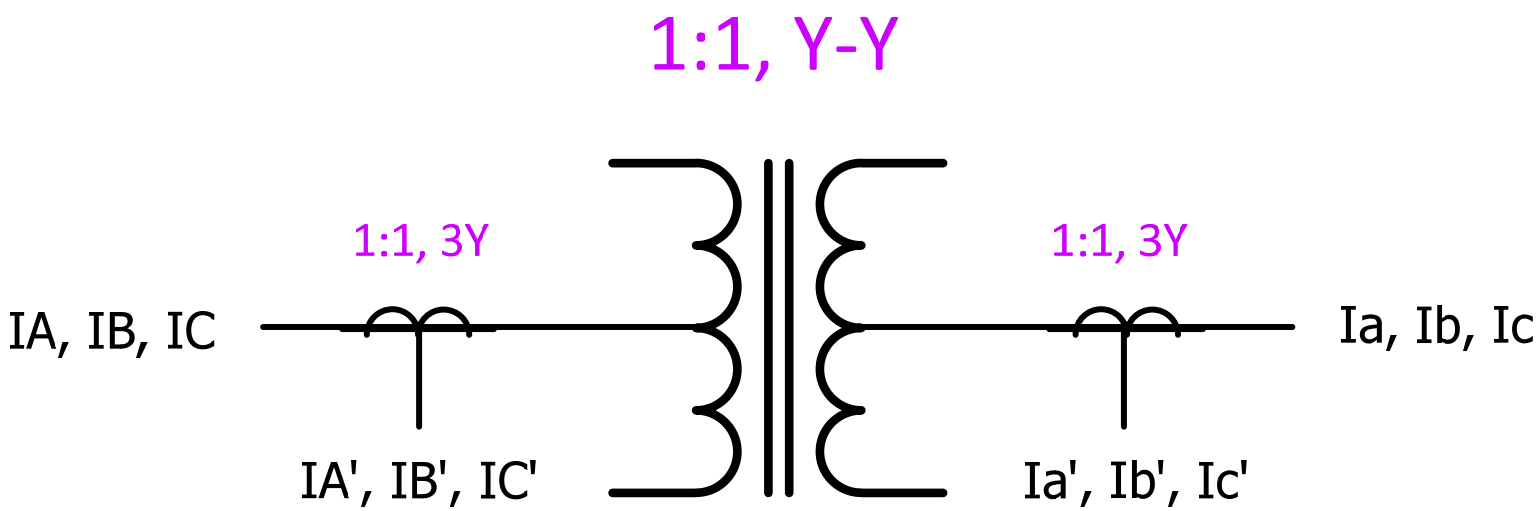

IA' = Ia'
IB' = Ib'
IC' = Ic'

Compensation: Change in CT Ratio

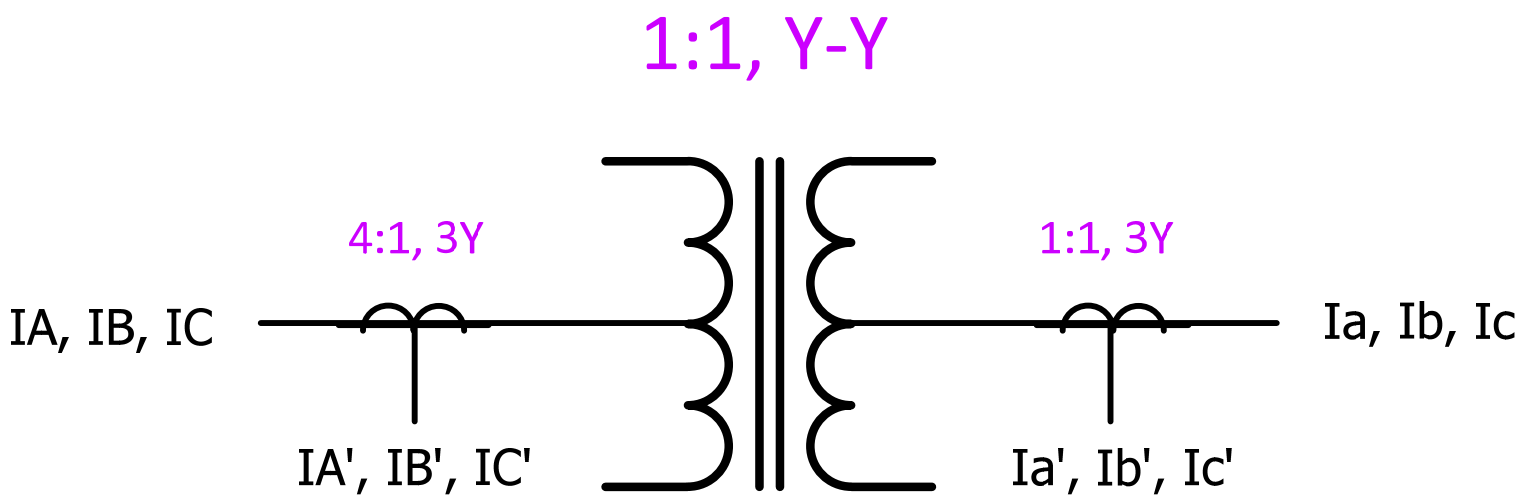

IA' = Ia' / 4
IB' = Ib' / 4
IC' = Ic' / 4

Compensation: Transformer Ratio

2:1, Y-Y

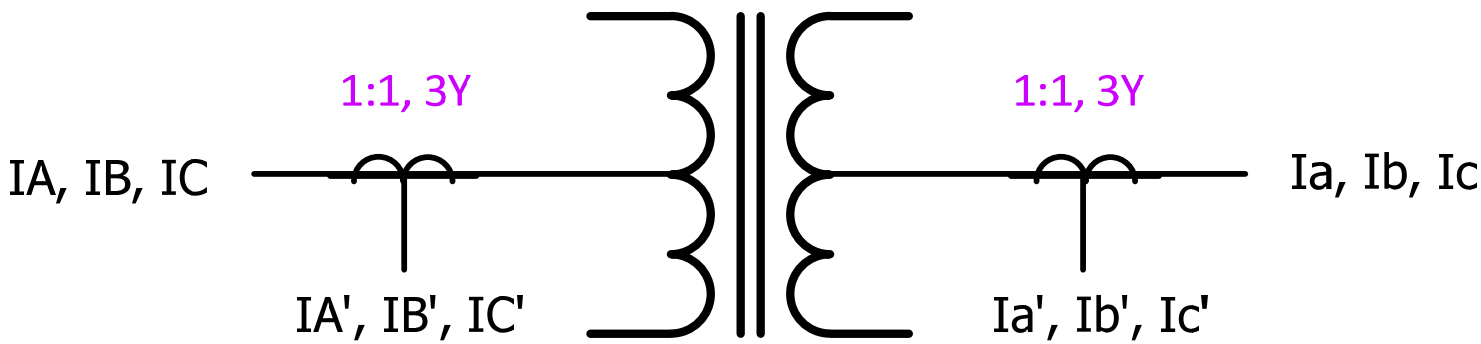

$$IA' = Ia' / 2$$
$$IB' = Ib' / 2$$
$$IC' = Ic' / 2$$

Compensation: Delta – Wye Transformation

1:1,△-Y

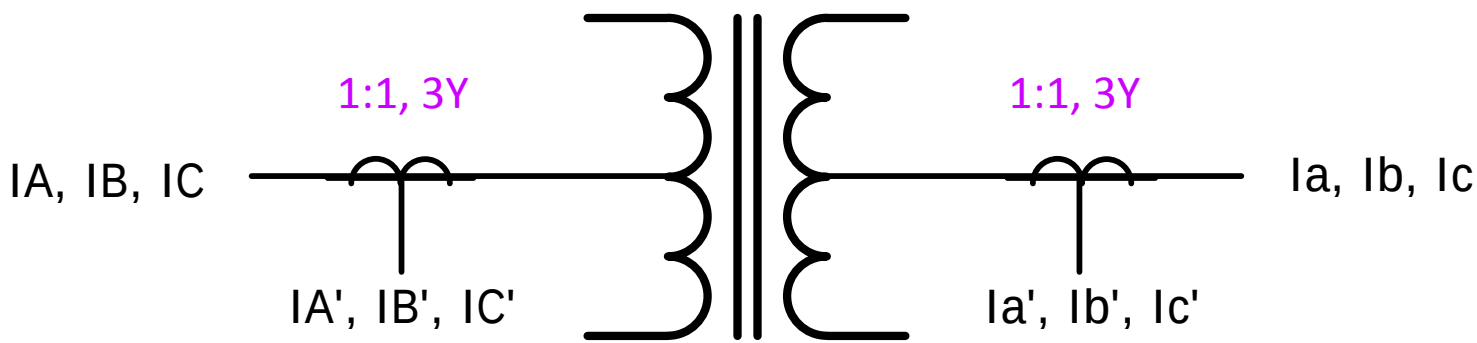

ANSI standard, high lead low by 30,
Current pairs are: IA-IB, IB-IC, IC-IA

$$IA' = Ia' * 1.73$$
$$IB' = Ib' * 1.73$$
$$IC' = Ic' * 1.73$$

Standard Application

- Set winding types
- 6 choices of configuration for windings and CTs

CT

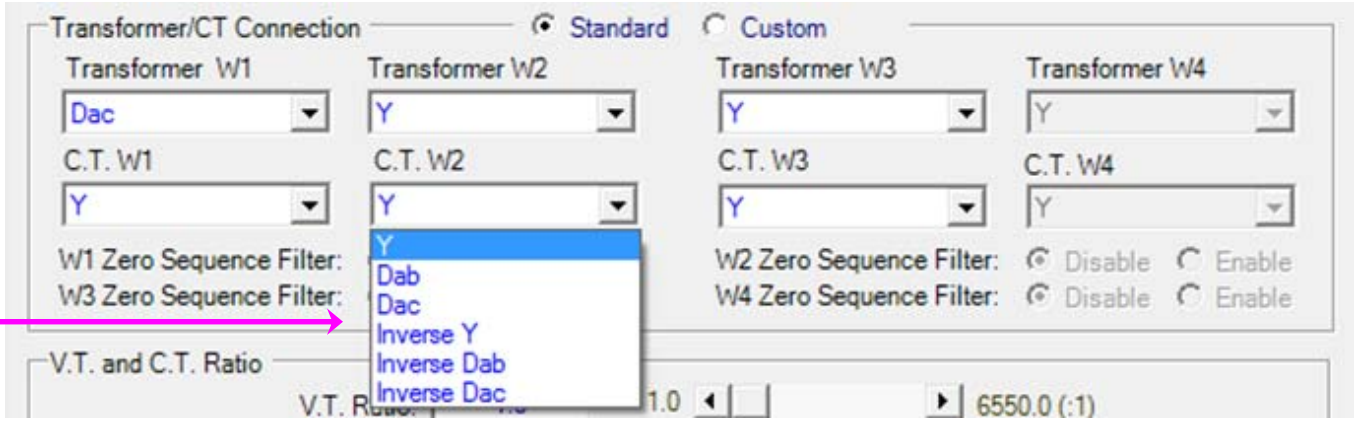

Winding

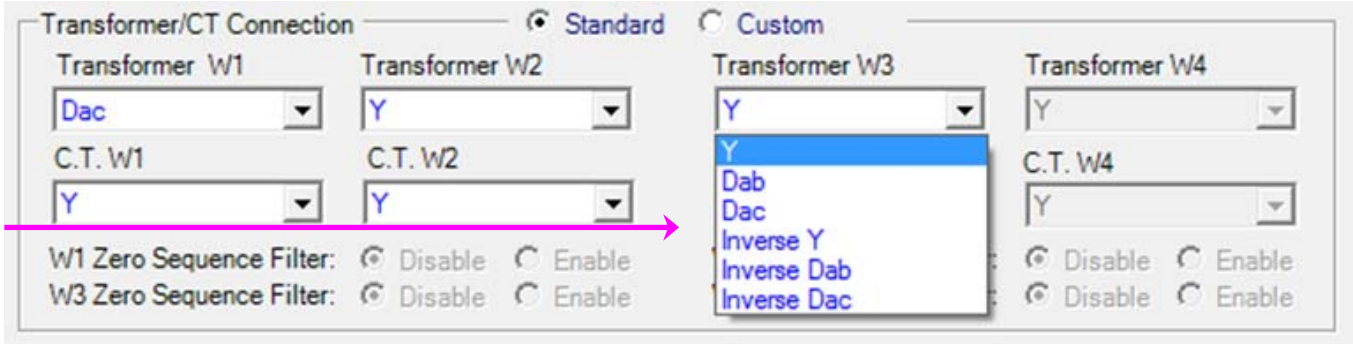

Custom Application: Accommodates any CTs and Windings

Winding

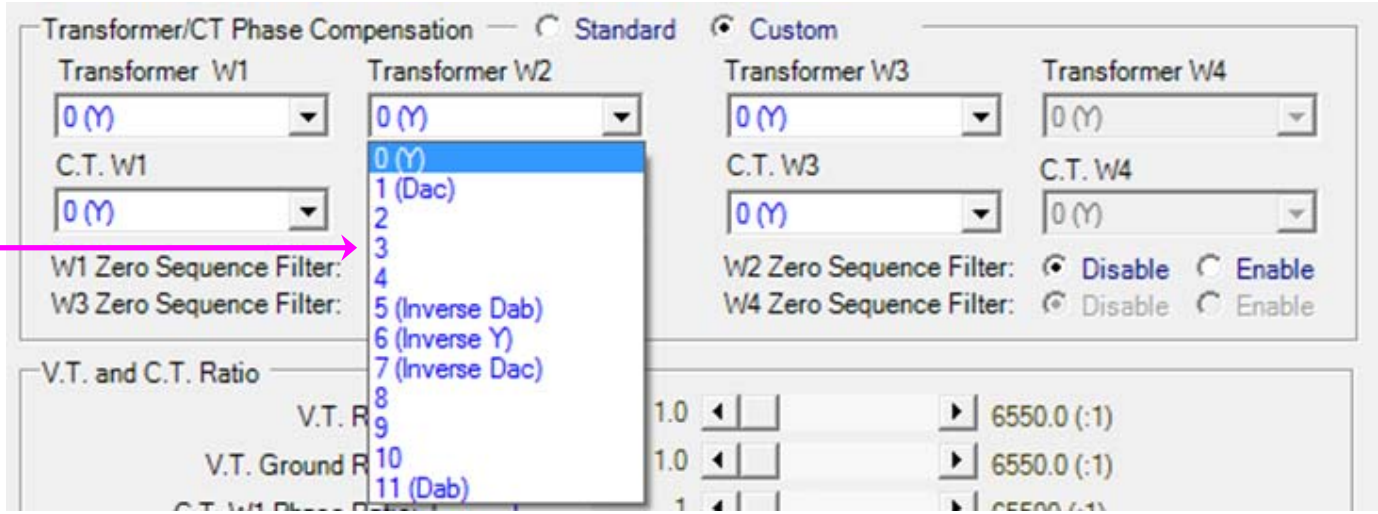

Custom Application: Accommodates any CTs and Windings

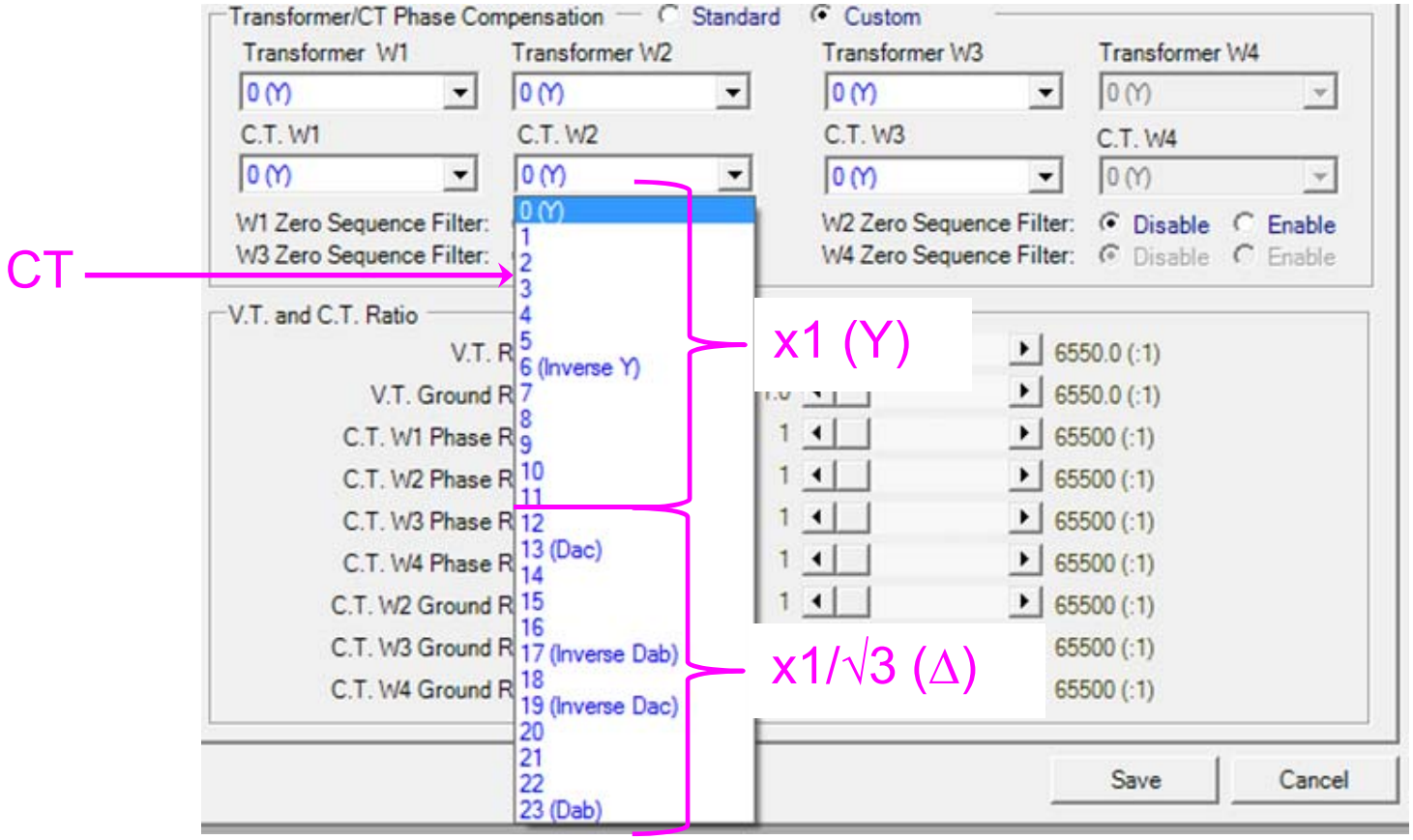

Custom Application: Accommodates any CTs

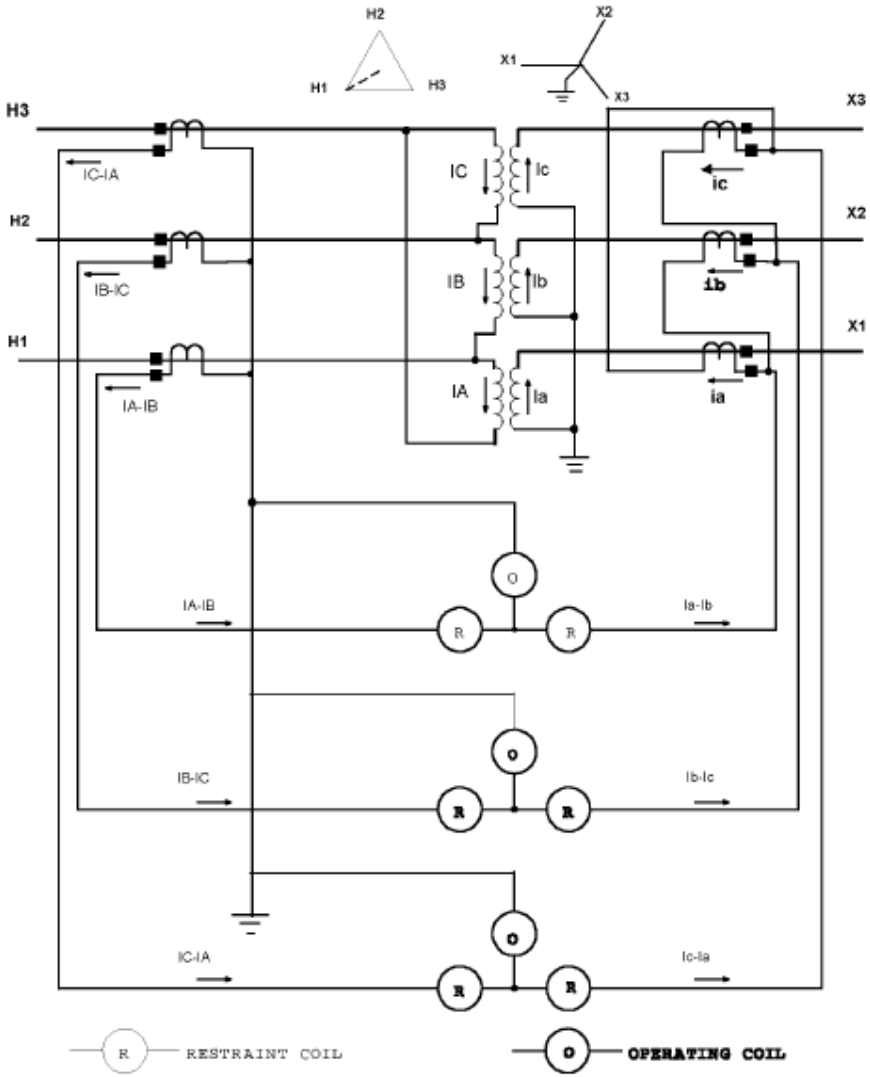

- Legacy Application
- Need to keep Delta CTs on WYE side of transformer

Custom Application: Accommodates any CTs

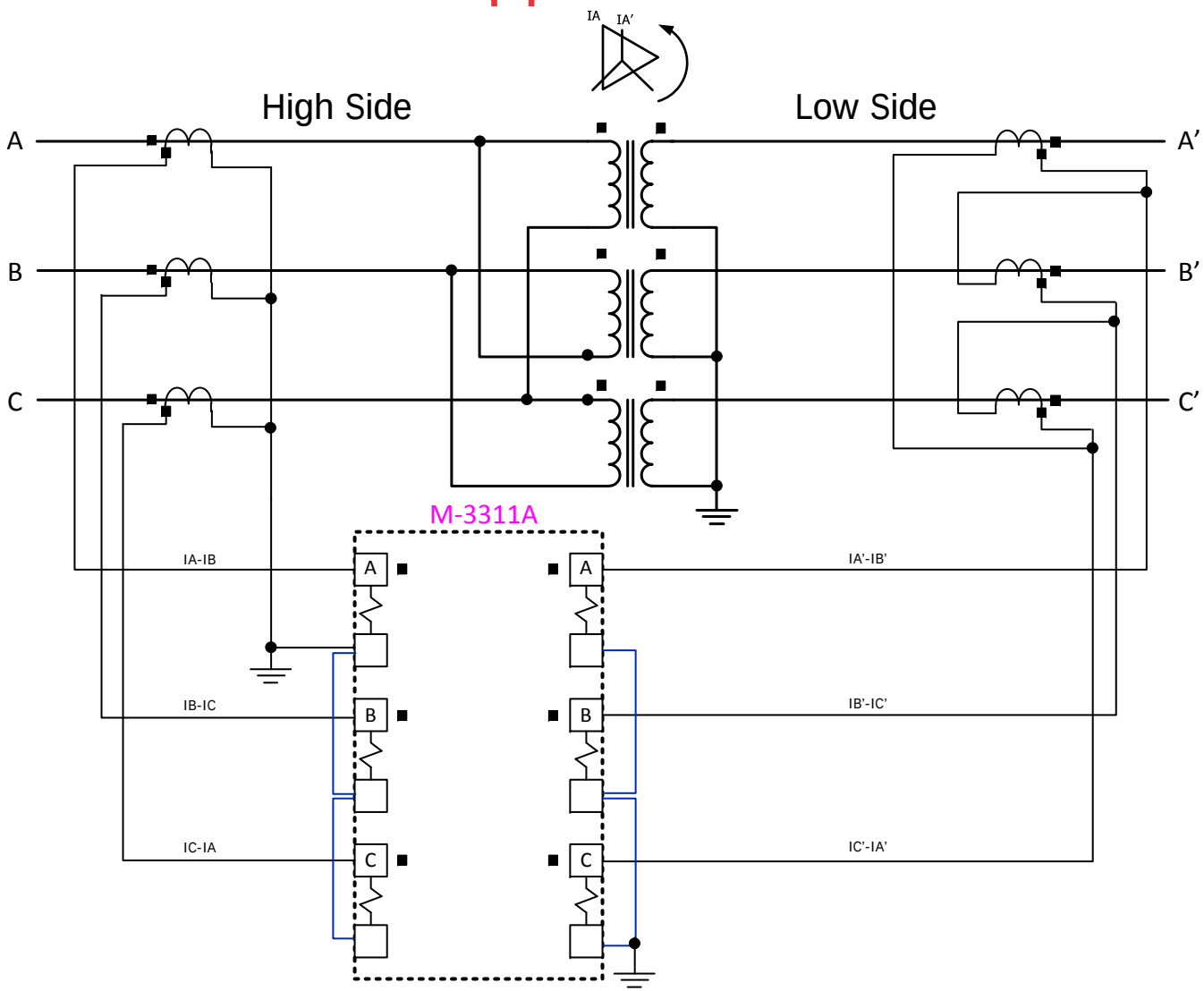

- Legacy Application
- Need to keep Delta CTs on WYE side of transformer

Core Construction and $3I_0$ Current

❑ Unit transformer with Three-Legged Core

- With a 3 legged core, the zero-sequence current contribution of the transformer case may contribute as much as 20% to 25% zero-sequence current.
  - o This is true regardless of if there is delta winding involved
  - o Use $3I_0$ restraint on wye CTs even on the delta CT winding!!!
  - o Use $3I_0$ restraint on wye CTs with wye windings!!!

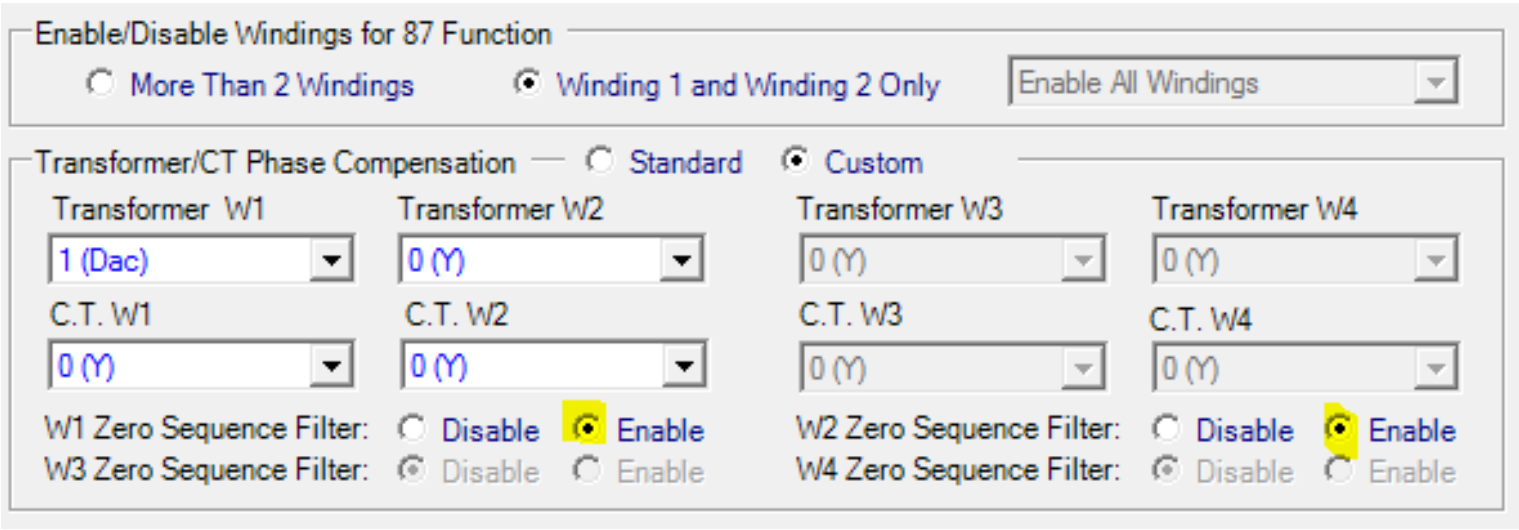

Compensation: Zero-Sequence Elimination

$$3I_0 = [I_a + I_b + I_c]$$

$$I_0 = 1/3 * [I_a + I_b + I_c]$$

Used where filtering is required (Ex: Y/Y transformer).

Relay Custom Application

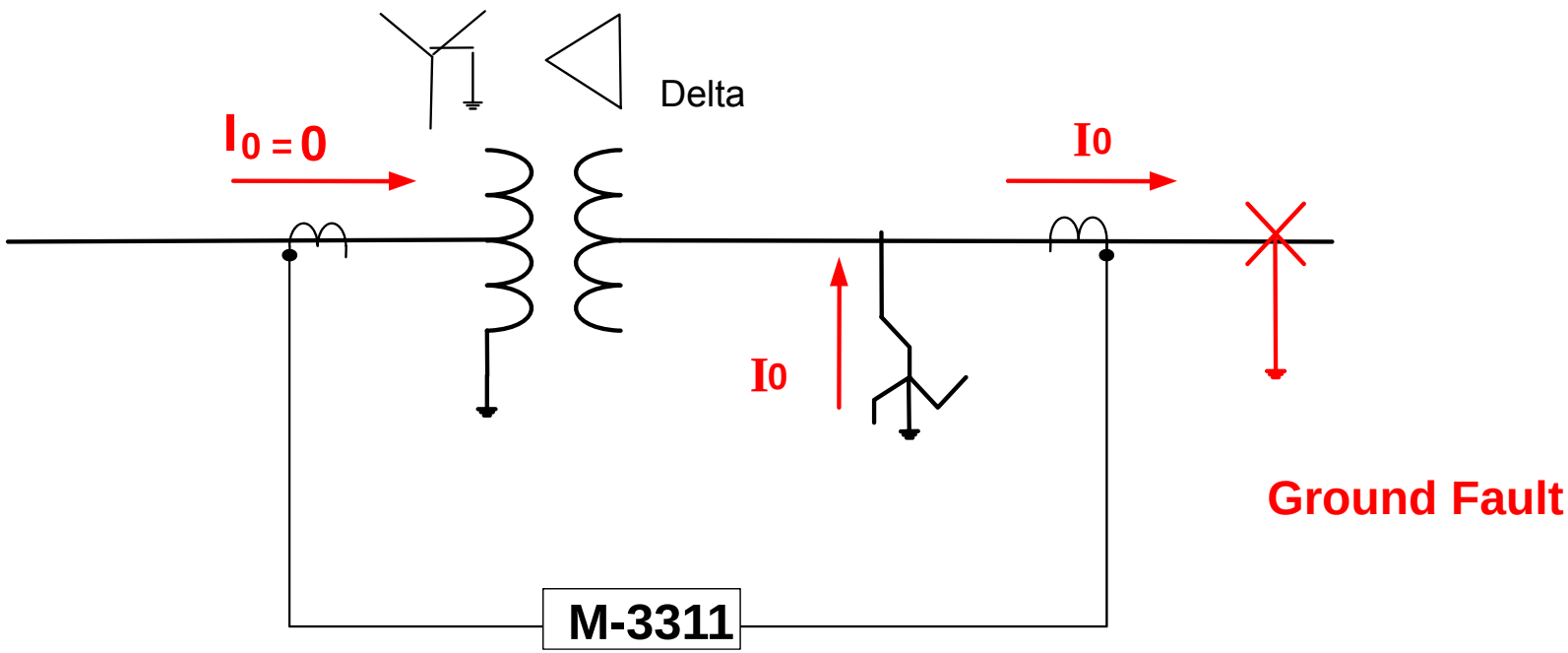

Winding Types

❑ Zig-Zag

- Provides Ground Source for Ungrounded systems

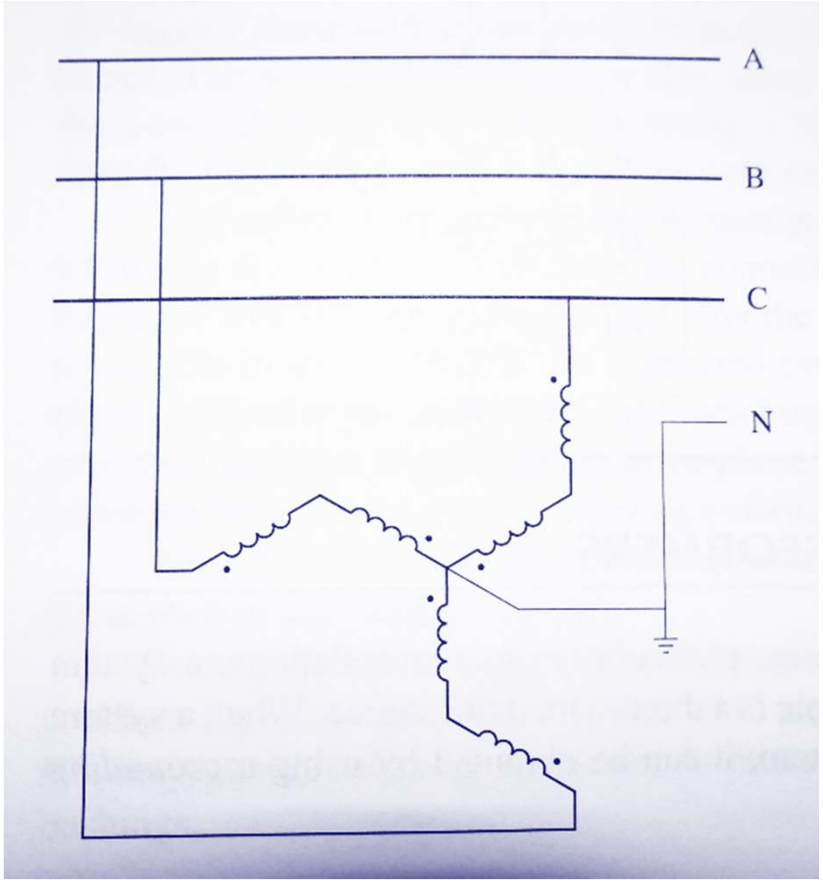

Winding Types

❑ Wye-Delta Ground Bank

- Provides Ground Source for Ungrounded Systems

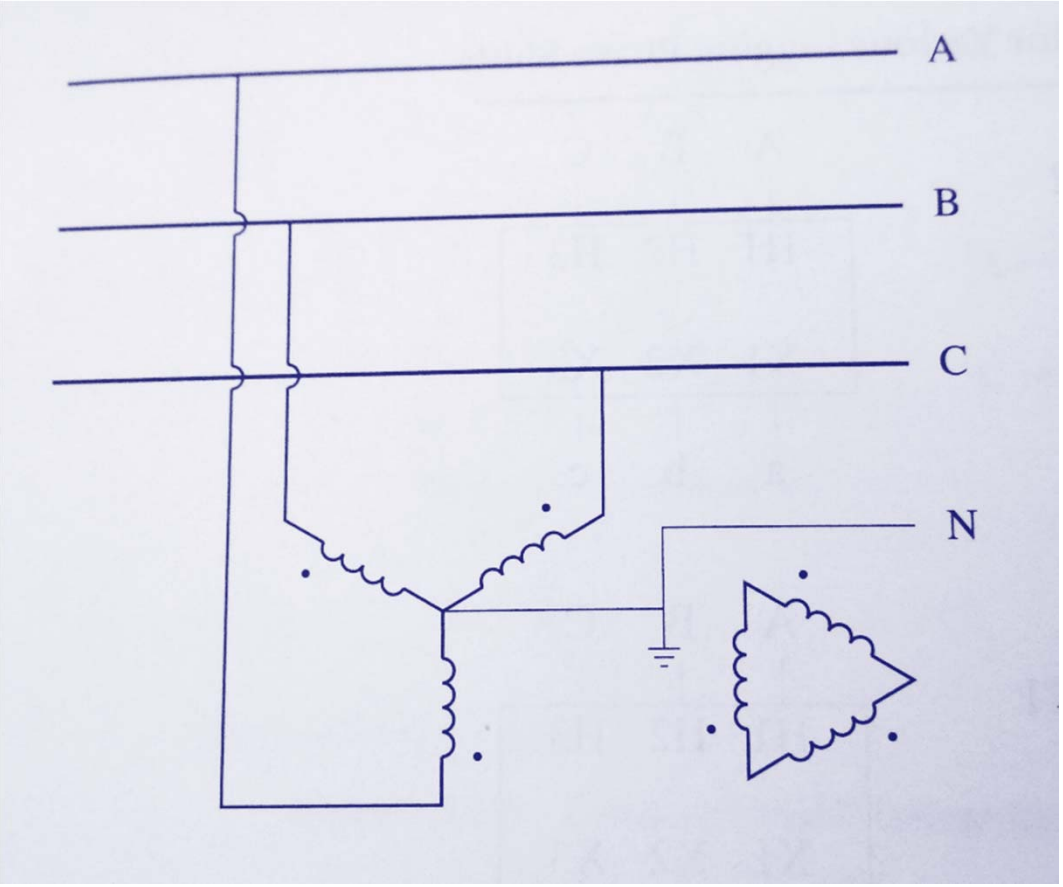

Inrush Detection and Restraint

- Characterized by current into one winding of transformer, and not out of the other winding(s)
  - This causes a differential element to pickup
- Use **inrush restraint** to block differential element during inrush period
  - **Initial inrush** occurs during transformer energizing as the core magnetizes
  - **Sympathy inrush** occurs from adjacent transformer(s) energizing, fault removal, allowing the transformer to undergo a low level inrush
  - **Recovery Inrush** occurs after an out-of-zone fault is cleared and the fault induced depressed voltage suddenly rises to rated.

Classical Inrush Detection

- 2nd harmonic restraint has been employed for years
- “Gap” detection has also been employed
- As transformers are designed to closer tolerances, the incidence of both 2nd harmonic and low current gaps in waveform have decreased
- If 2nd harmonic restraint level is set too low, differential element may be blocked for internal faults with CT saturation (with associated harmonics generated)

Advanced Inrush Detection

- 4th harmonic is also generated during inrush
  - Even harmonics are more prevalent than odd harmonics during inrush
  - Odd harmonics are more prevalent during CT saturation
- Use 4th harmonic and 2nd harmonic together
  - Use RMS sum of the 2nd and 4th harmonic as inrush restraint
- Result: Improved security while not sacrificing reliability

Inrush Oscillograph

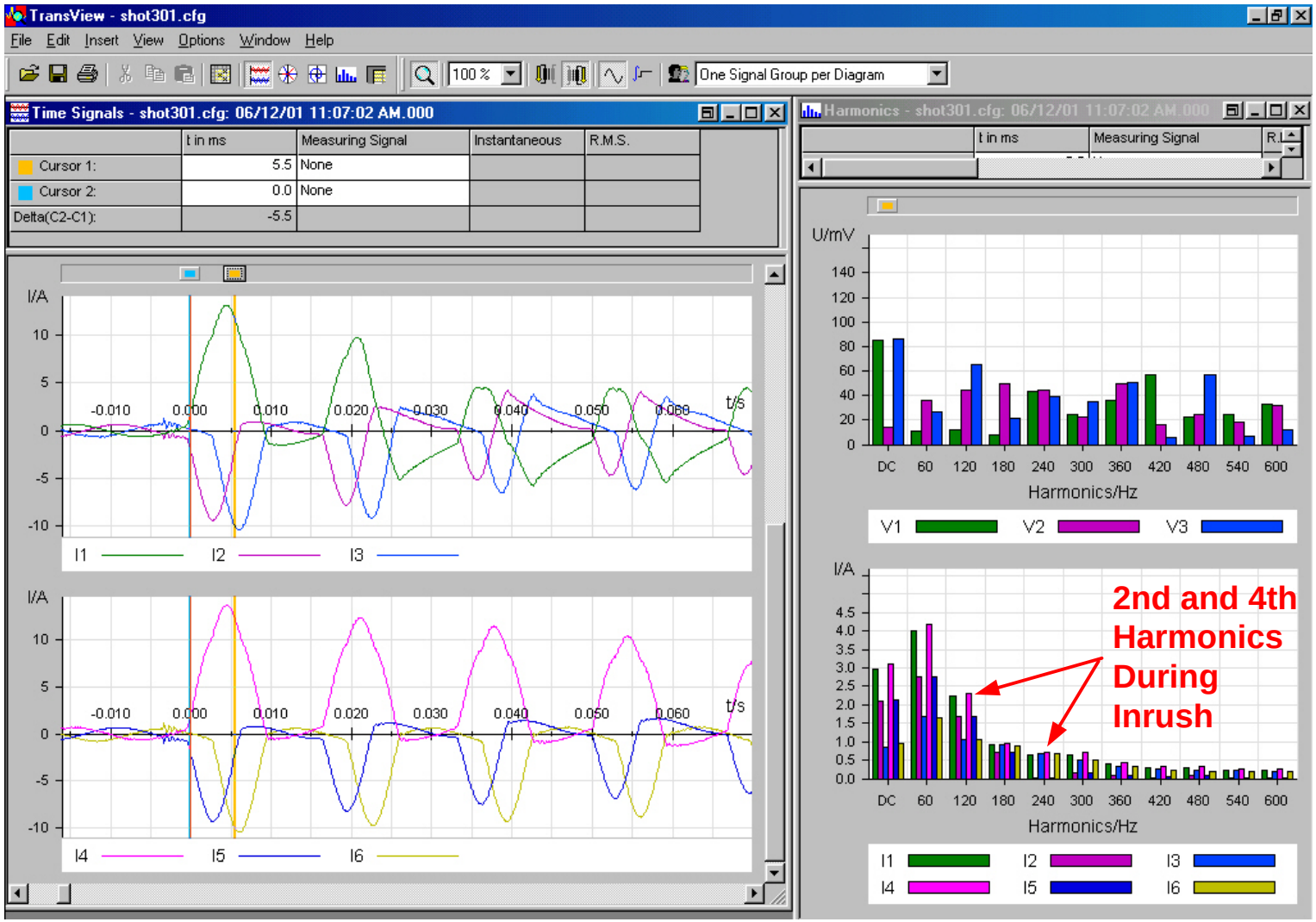

Typical Transformer Inrush Waveform

Inrush Oscillograph

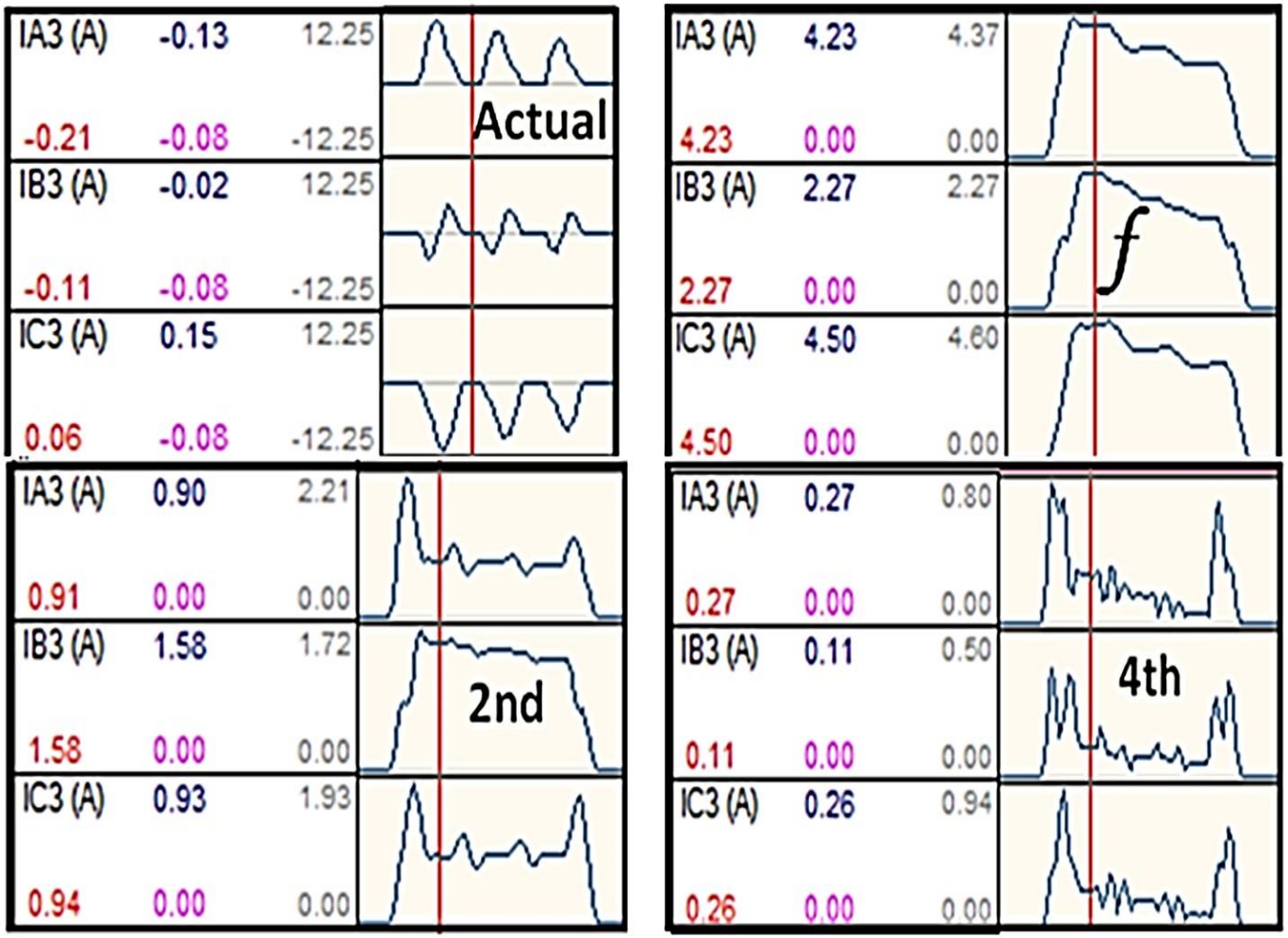

Typical Transformer Inrush Waveform

Overexcitation Restraint

- Overexcitation occurs when volts per hertz level rises (V/Hz) above the rated value
- This may occur from:
  - Load rejection (generator transformers)
  - Malfunctioning of voltage and reactive support elements
  - Malfunctioning of breakers and line protection (including transfer trip communication equipment schemes)
  - Malfunctioning of generator AVRs
- The voltage rise at nominal frequency causes the V/Hz to rise
- This causes the transformer core to saturate and thereby increase the magnetizing current.
- The increased magnetizing current contains 5th harmonic component
- This magnetizing current causes the differential element to pickup
  - Current into transformer that does not come out

Trip Characteristic – 87T

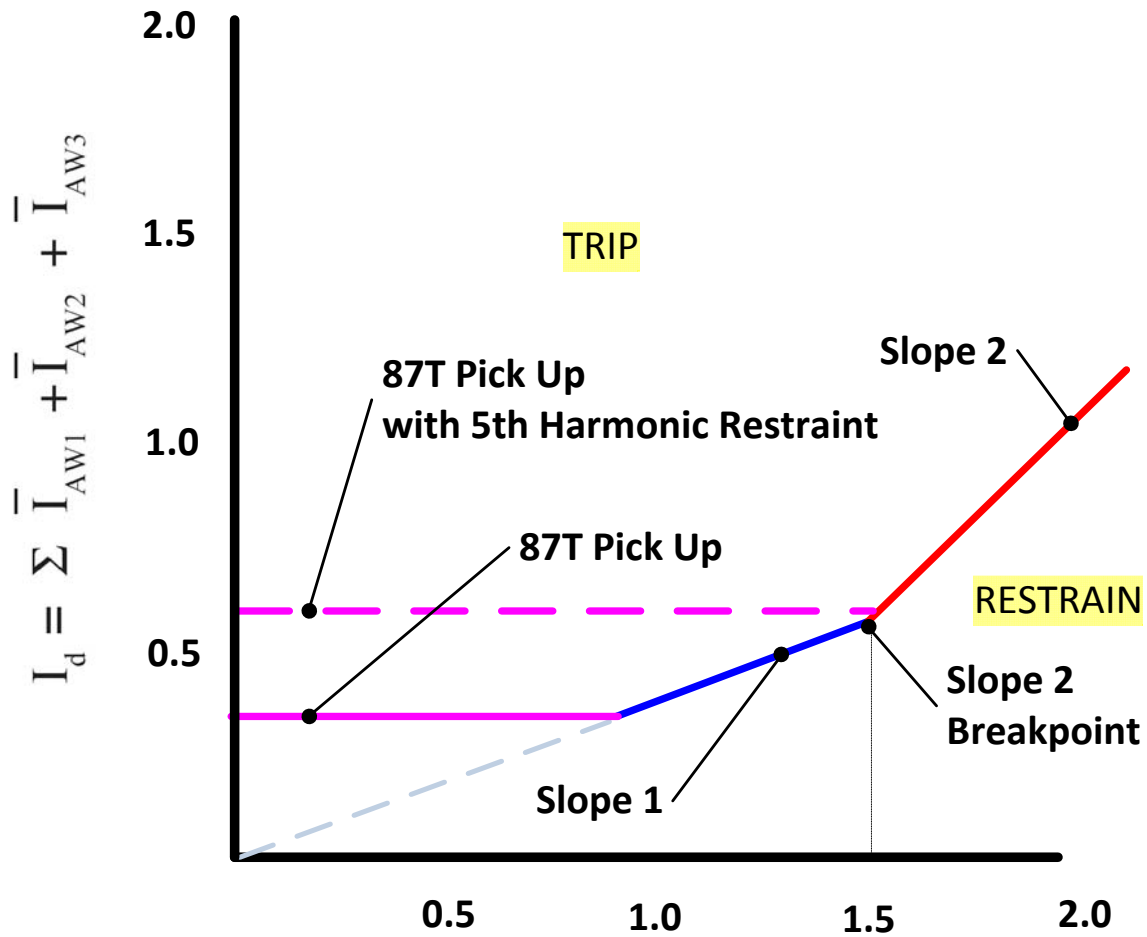

$$I_R = \frac{\Sigma \left| I_{AW1} \right| + \left| I_{AW2} \right| + \left| I_{AW3} \right|}{2}$$

⇒D

Testing the 87 Elements

1. Review setting calculations
2. Testing Minimum Pick-up, both windings of 87 element
3. Testing slope segment 1
4. Testing slope segment 2
5. Testing the high set
6. Testing 20% harmonic restraint

But first, a few scary stories!

Testing Rules of the Road!!

1. Minimum 6 phase currents, essential for accurate slope tests
2. NEVER change tap settings for testing purposes
3. NEVER change logic of relay for testing
4. NEVER close the trip circuits before checking for a relay trip indication
5. ALWAYS try to verify the correct settings

"Thinking logically as to how a relay responds in a faulted condition helps to visualize a proper test sequence"
--Drew Welton

Today's Transformer Model

1. Y-Y Connected
2. Y Connected CT's
3. 40 MVA
4. Primary L-L Voltage of 30KV
5. Secondary L-L Voltage of 240K
6. CT Ratios of 240:1 on Primary, 50:1 on Secondary

Relay Systems Settings for Today

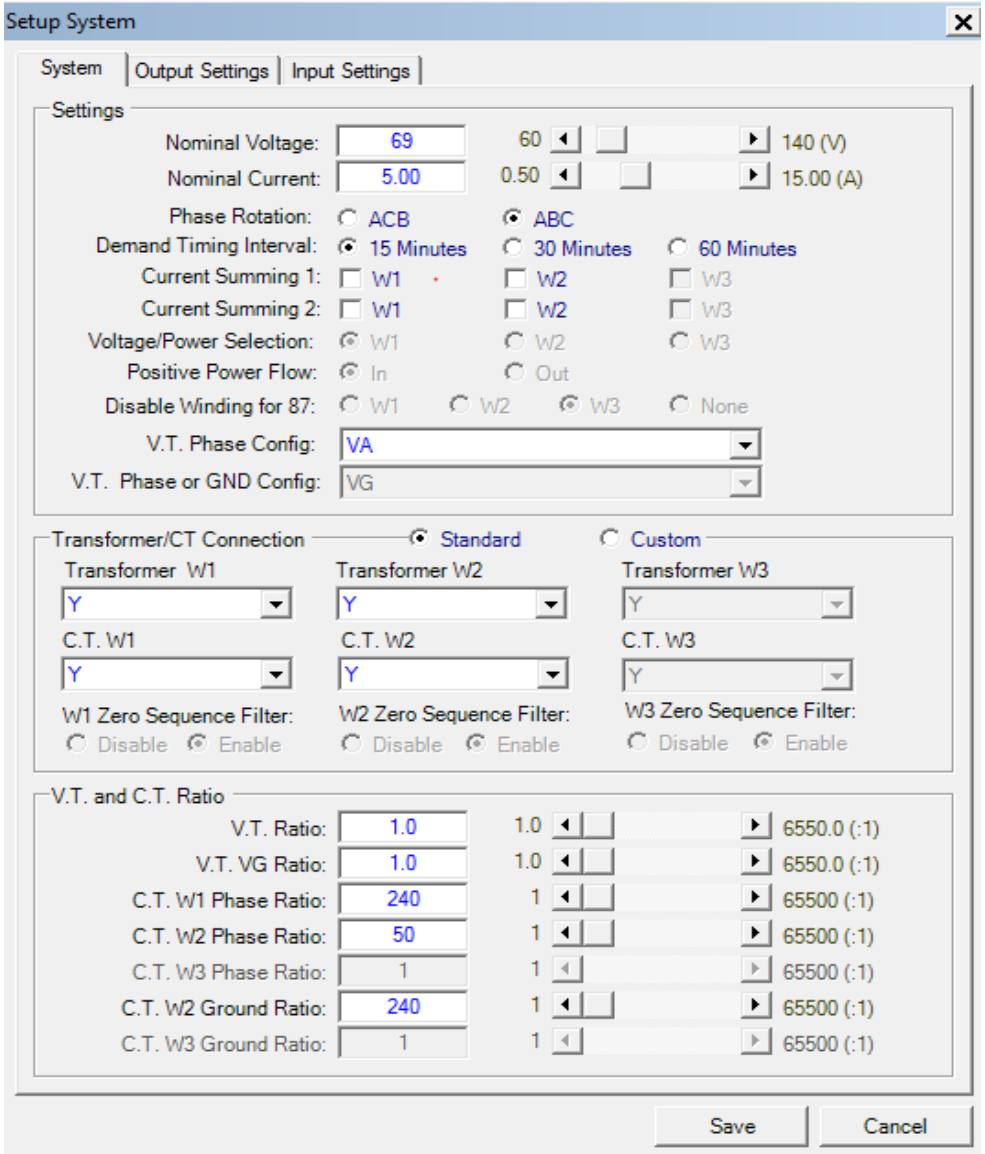

Setting Calculations for Tap Wdg 1 and 2 (Math Class!)

$$87\ CT\ Tap_{WN} = \frac{MVA \times 10^3}{\sqrt{3} \times kVL\text{-}L \times CTR_{WN}}$$

Translated for a Sales Guy!

40X1000/1.732/30/240 = 3.2 Tap wdg 1

40X1000/1.732/240/50 = 1.94 Tap wdg 2

Settings for the 87 Element

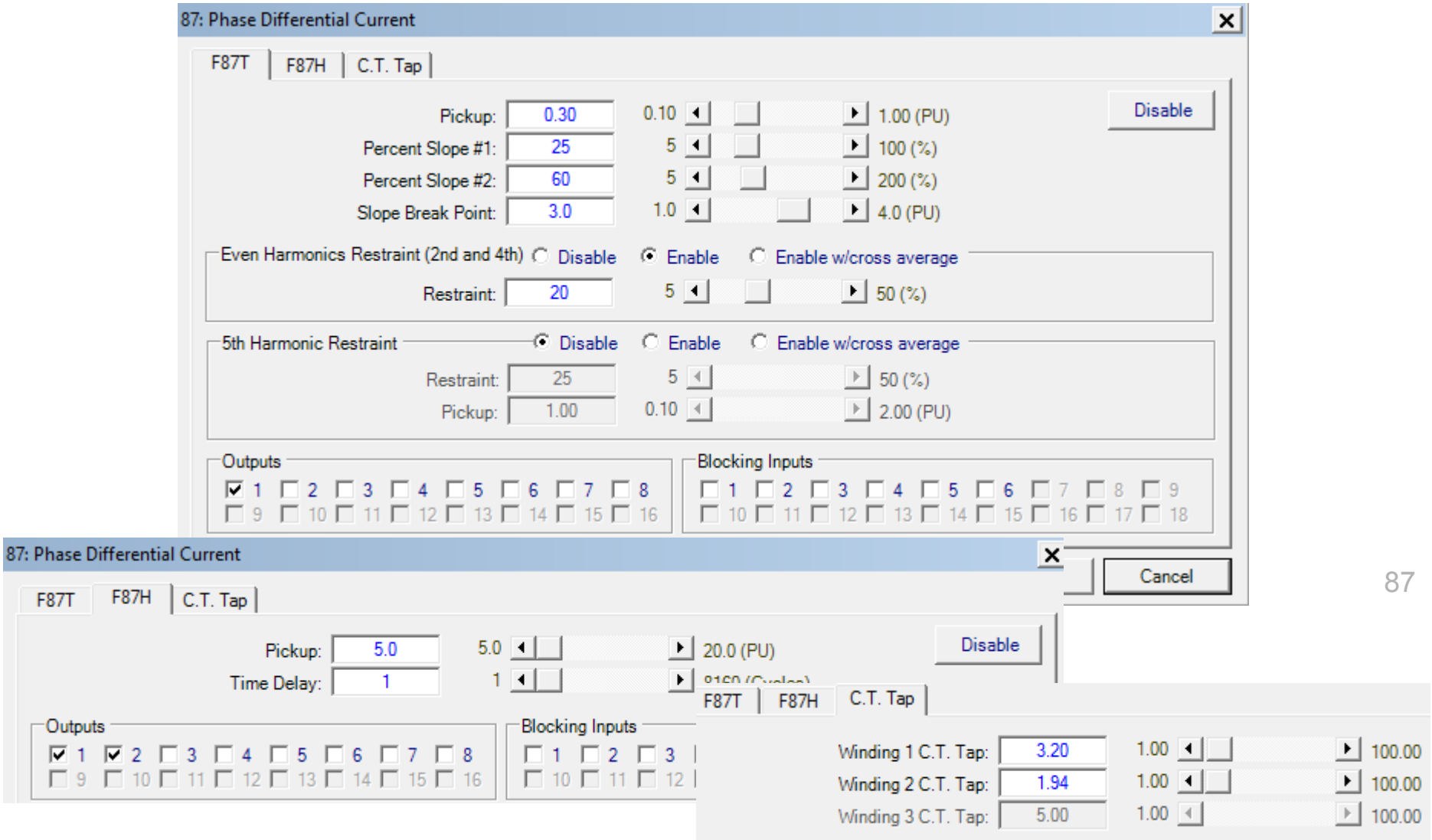

Analog Outputs			
Set Mode	Direct		
I Prim A	3.200 A	0.00 °	60.000 Hz
I Prim B	3.200 A	-120.00 °	60.000 Hz
I Prim C	3.200 A	120.00 °	60.000 Hz
I Sec A	1.940 A	-180.00 °	60.000 Hz
I Sec B	1.940 A	-300.00 °	60.000 Hz
I Sec C	1.940 A	-60.00 °	60.000 Hz

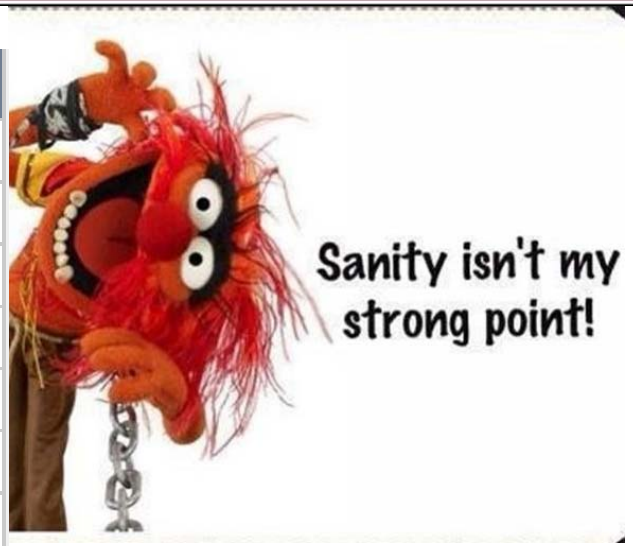

Secondary Metering & Status

W1 Currents (A)	
Phase A	3.189
Phase B	3.187
Phase C	3.195
Pos. Seq.	3.190
Neg. Seq.	0.005
Zero Seq.	0.000

W2 Currents (A)	
Phase A	1.939
Phase B	1.936
Phase C	1.936
Ground	0.002
Pos. Seq.	1.938
Neg. Seq.	0.004
Zero Seq.	0.003

Restr. Currents (pu)	
Phase A	1.00
Phase B	0.99
Phase C	1.00

Phase Differential (pu)	
Phase A	0.01
Phase B	0.01
Phase C	0.01

Wiring Check

Apply tap setting values on both windings.

Relay should not trip, Pos. Seq. Currents for both windings.

No Differential Current

Testing Minimum Pick Up

(Tap Wdg 1) 3.2 X .3 = .96 Amps

Analog Outputs			
Set Mode	Direct		
I Prim A	960.0 mA	0.00 °	60.000 Hz
I Prim B	960.0 mA	-120.00 °	60.000 Hz
I Prim C	960.0 mA	120.00 °	60.000 Hz
I Sec A	0.000 A	-180.00 °	60.000 Hz
I Sec B	0.000 A	-300.00 °	60.000 Hz
I Sec C	0.000 A	-60.00 °	60.000 Hz

(Tap Wdg 2) 1.94 X .3 = .58 Amps

Analog Outputs			
Set Mode	Direct		
I Prim A	0.000 A	0.00 °	60.000 Hz
I Prim B	0.000 A	-120.00 °	60.000 Hz
I Prim C	0.000 A	120.00 °	60.000 Hz
I Sec A	582.0 mA	-180.00 °	60.000 Hz
I Sec B	582.0 mA	-300.00 °	60.000 Hz
I Sec C	582.0 mA	-60.00 °	60.000 Hz

Testing the 25% Slope, First Quiz:

When verifying the slope, the initials P.U. refer to:

1) Something really smelly
2) Pick up
3) Per unit ←
4) None of the above, or we started too early and I'm still asleep!

How do we convert to per unit values?

Tap setting of 3.2 Amps=1 P.U. wdg 1
Tap setting of 1.94 Amps = 1 P.U. wdg 2

How do we use this information to verify a 25% Slope?

Verifying the 25% Slope

1. Start with balance currents, same as meter check
2. Ramp the wdg 1- 3 phase currents up in 100mA increments
3. Record the values at the point of tripping
4. View the 87 Dual Slope graphic in the IPScom Monitor menu

Analog Outputs			
Set Mode	Direct		
I Prim A	4.100 A	0.00 °	60.000 Hz
I Prim B	4.100 A	-120.00 °	60.000 Hz
I Prim C	4.100 A	120.00 °	60.000 Hz
I Sec A	1.940 A	-180.00 °	60.000 Hz
I Sec B	1.940 A	-300.00 °	60.000 Hz
I Sec C	1.940 A	-60.00 °	60.000 Hz

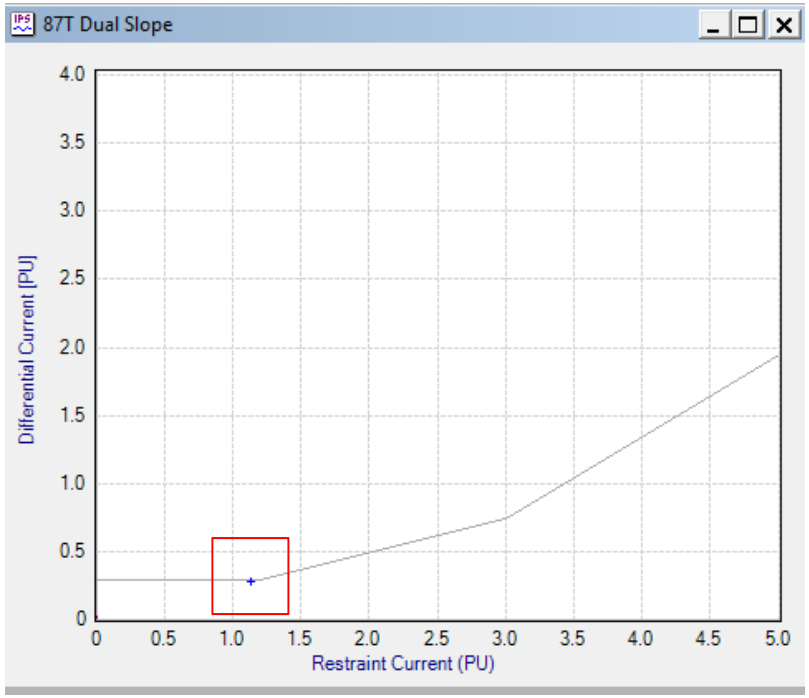

25% Slope Math Equations

Wdg 1 Pick Up / Wdg 1 Nominal

4.1/3.2=1.28

1.28 – 1 (pu value of Wdg 2)=.28

1+1.28=2.28/2=1.14 (pu value of Wdg. 1+2)

.28/1.14=@25%

25% Slope - Doubled Values

Analog Outpu		
Set Mode	Direct	
I Prim A	8.200 A	0.00 °
I Prim B	8.200 A	-120.00 °
I Prim C	8.200 A	120.00 °
I Sec A	3.880 A	-180.00 °
I Sec B	3.880 A	-300.00 °
I Sec C	3.880 A	-60.00 °

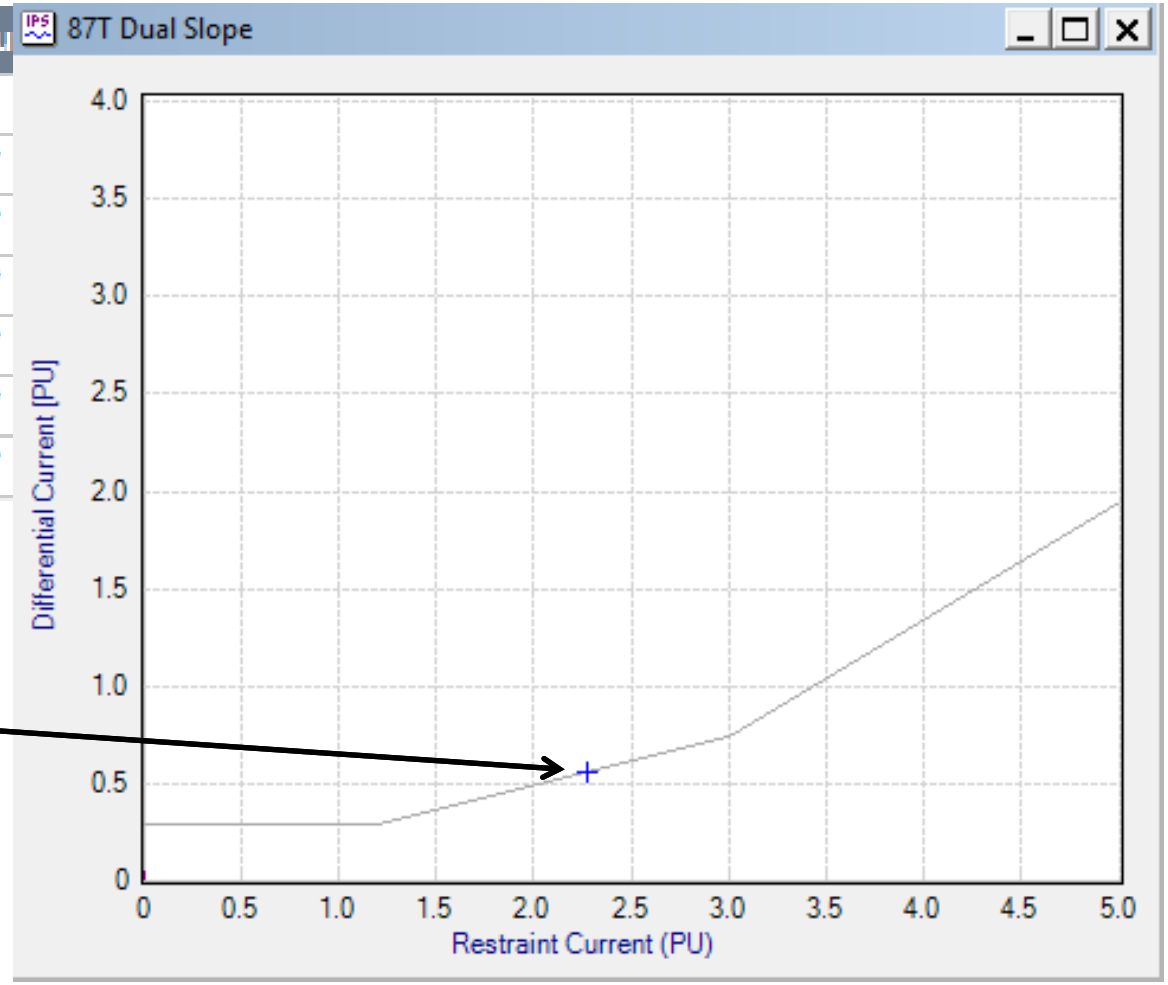

Same out come, further up the slope!

60% Slope 2 Math Equations

W1pu = W1 actual value / W1 Nominal = 13/3.2 = 4.06 pu
W2pu = W2 actual value / W2 Nominal = 5.82/1.94 = 3 pu

Diff = W1pu – W2pu = 4.06 – 3 = 1.06 pu

Restraint = (W1pu + W2pu)/2 = 3.53 pu

y = mx + b
Diff = m*Restraint + b
b = Diff – m*Restraint = 1.06 – 0.60*3.53 = -1

m = (y + b)/x = (1.06 + 1)/3.53 = 0.60

Slope 2 = m*100 = 0.60*100 = 60%

I Prim A	13.00 A	0.00 °	60.000 Hz
I Prim B	13.00 A	-120.00 °	60.000 Hz
I Prim C	13.00 A	120.00 °	60.000 Hz
I Sec A	5.820 A	-180.00 °	60.000 Hz
I Sec B	5.820 A	-300.00 °	60.000 Hz
I Sec C	5.820 A	-60.00 °	60.000 Hz

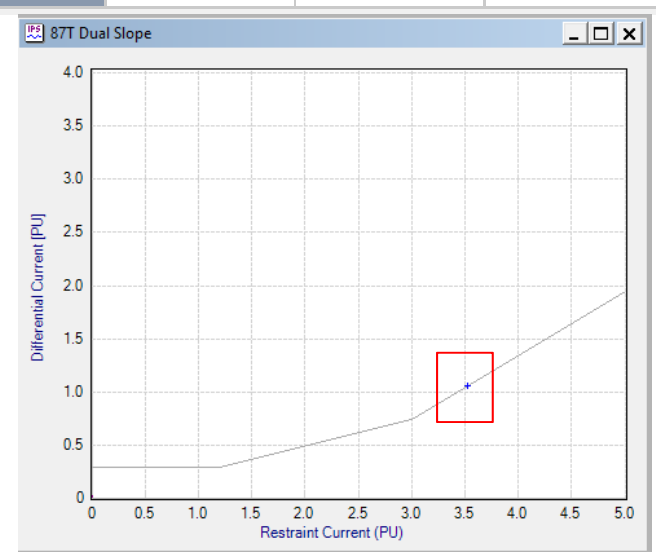

Test the 87 High Set (Unrestrained)

Current at Primary Side [F]

A = 42.499 A -180.00°
B = 42.499 A 60.00°
C = 42.499 A -60.00°

Current at Secondary Side [S]

A = 15.685 A 0.00°
B = 15.685 A -120.00°
C = 15.685 A 120.00°

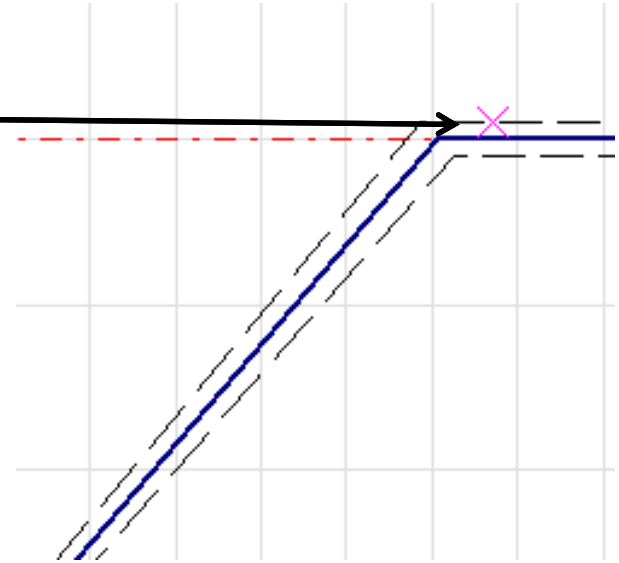

Current magnitudes are too high for most test sets to apply both windings! We are set to only a pick up of 5X, some are 10X, and this would double these values.

Test the 87 High Set (Unrestrained)

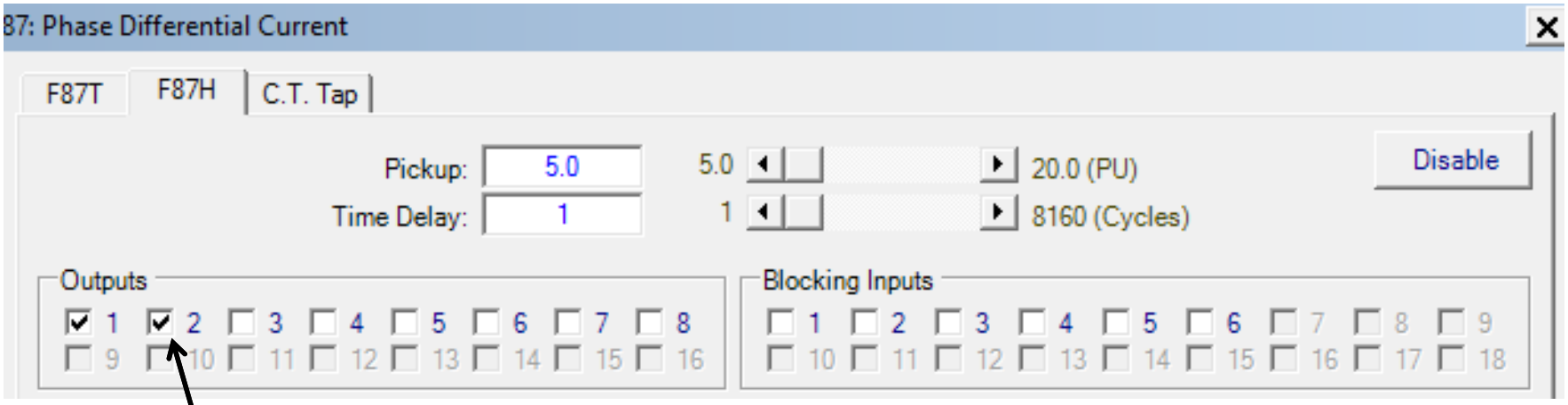

Add additional output contact for assessment

Ramp 3 phase currents as such:
Wdg 1 tap 3.2A X 5 = 16
Wdg 2 tap 1.94 X 5 = 9.7
Corresponding windings set to zero

Testing 20% Harmonic Restraint

Set Wdg 1 to 110%, of tap at 60 Hz to trip the 87 relay
Change 1 or all 3 phases to 120Hz, target should clear.
(4th is 240Hz, 5th is 300Hz)

Analog Outputs			
Set Mode	Direct		
I Prim A	3.520 A	0.00 °	60.000 Hz
I Prim B	3.520 A	-120.00 °	60.000 Hz
I Prim C	3.520 A	120.00 °	60.000 Hz
I Sec A	0.000 A	-180.00 °	60.000 Hz
I Sec B	0.000 A	-300.00 °	60.000 Hz
I Sec C	0.000 A	-60.00 °	60.000 Hz

Analog Outputs			
Set Mode	Direct		
I Prim A	3.520 A	0.00 °	120.00 Hz
I Prim B	3.520 A	-120.00 °	120.00 Hz
I Prim C	3.520 A	120.00 °	120.00 Hz
I Sec A	0.000 A	-180.00 °	60.000 Hz
I Sec B	0.000 A	-300.00 °	60.000 Hz
I Sec C	0.000 A	-60.00 °	60.000 Hz

Binary Inputs / Trigger				
Trip	●	☐		n/a
Start	○	☐		n/a

Binary Inputs / Trigger				
Trip	○	☐		n/a

⇒W

Overexcitation (V/Hz)

24

Overexcitation

- Responds to overfluxing; excessive V/Hz
  - 120V/60Hz = 2 = 1pu
- Constant operational limits
  - ANSI C37.106 & C57.12
    - 1.05 loaded, 1.10 unloaded
  - Inverse time curves typically available for values over the constant allowable level

- **Overfluxing is a <u>voltage</u> and <u>frequency</u> based issue**
- **Overfluxing protection needs to be voltage and frequency based (V/Hz)**
- **Although 5th harmonic is generated during an overfluxing event, there is <u>no correlation</u> between levels of 5th harmonic and severity of overfluxing**
- **Apparatus (transformers and generators) is rated with V/Hz withstand curves and limits – *not* 5th harmonic withstand limits**

Overexcitation vs. Overvoltage

- Overvoltage protection reacts to dielectric limits.
  - Exceed those limits and risk punching a hole in the insulation
  - Time is not negotiable

- Overexcitation protection reacts to overfluxing
  - Overfluxing causes heating
  - The voltage excursion may be less than the prohibited dielectric limits (overvoltage limit)
  - Time is not negotiable
  - The excess current cause excess heating which will cumulatively damage the asset, and if left long enough, will cause a catastrophic failure

Causes of Overexcitation

- **Generating Plants**
  - Excitation system runaway
  - Sudden loss of load
  - Operational issues (reduced frequency)
    - Static starts
    - Pumped hydro starting
    - Rotor warming

- **Transmission Systems**
  - Voltage and Reactive Support Control Failures
    - Capacitor banks ON when they should be OFF
    - Shunt reactors OFF when they should be ON
    - Near-end breaker failures resulting in voltage rise on line
      - Ferranti Effect
    - Runaway LTCs
    - Load Loss on Long Lines (Capacitive Charging Voltage Rise)

System Control Issues:
Overvoltage and Overexcitation

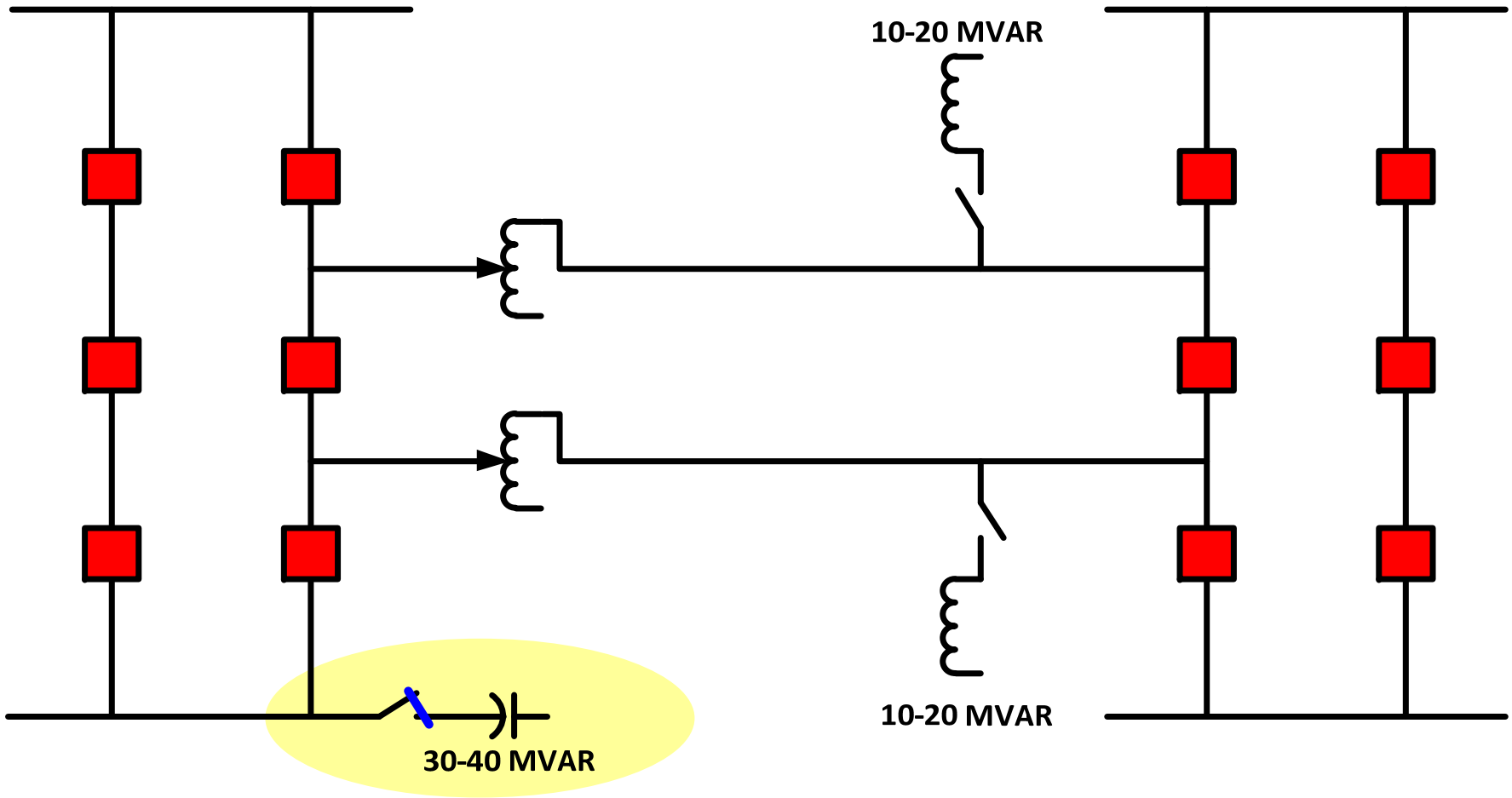

Caps <u>ON</u> When They Should Be Off

System Control Issues:
Overvoltage and Overexcitation

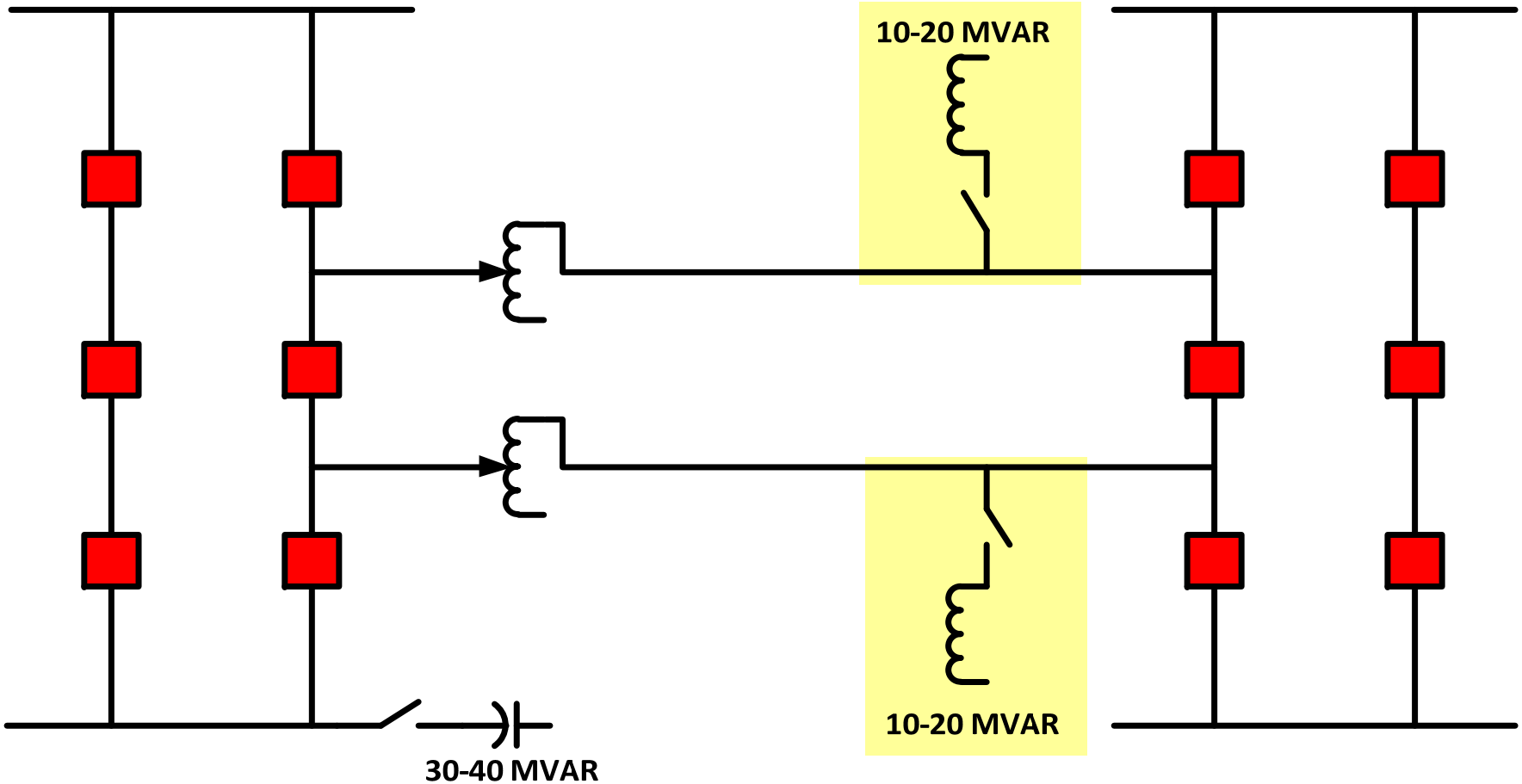

Reactors <u>OFF</u> When They Should Be On

System Control Issues:
Overvoltage and Overexcitation

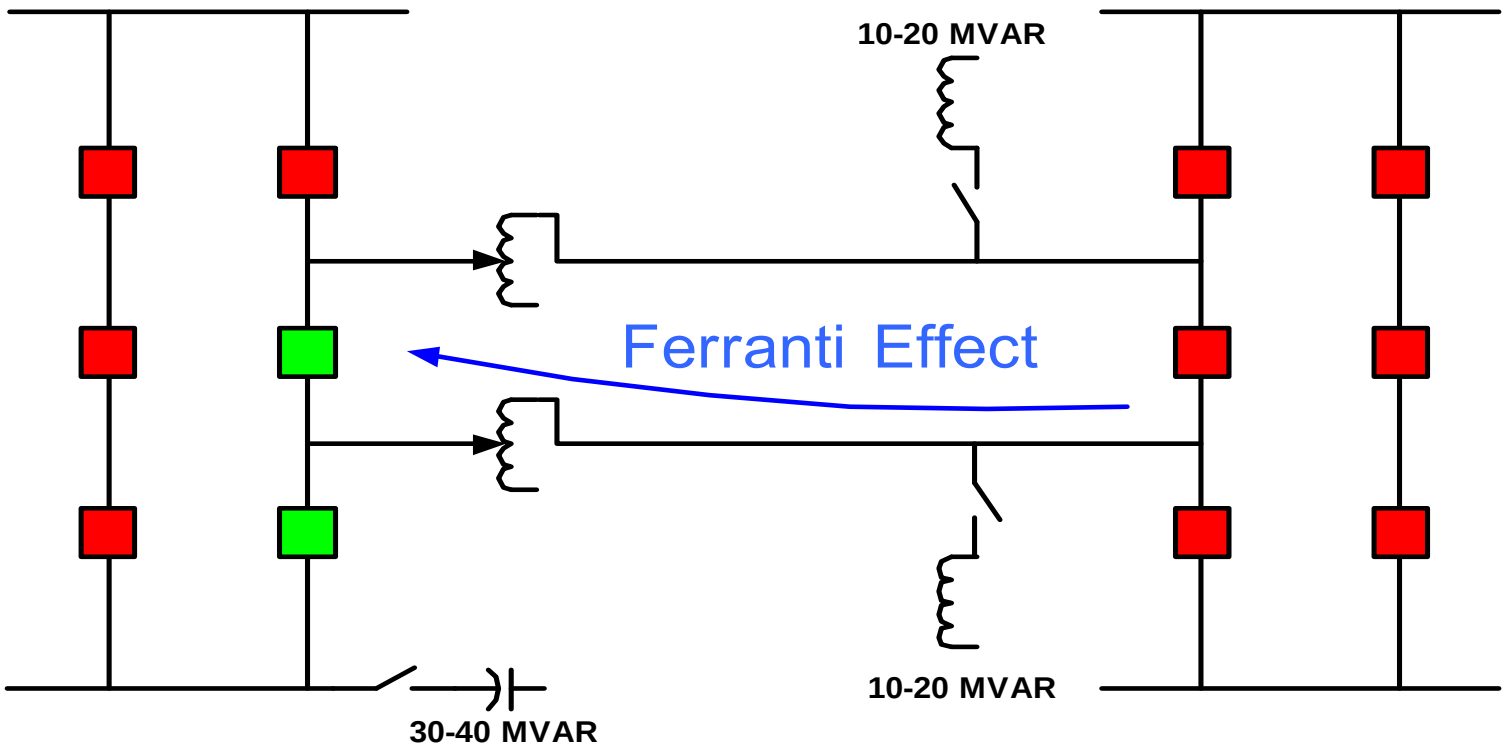

System Control Issues:
Overvoltage and Overexcitation

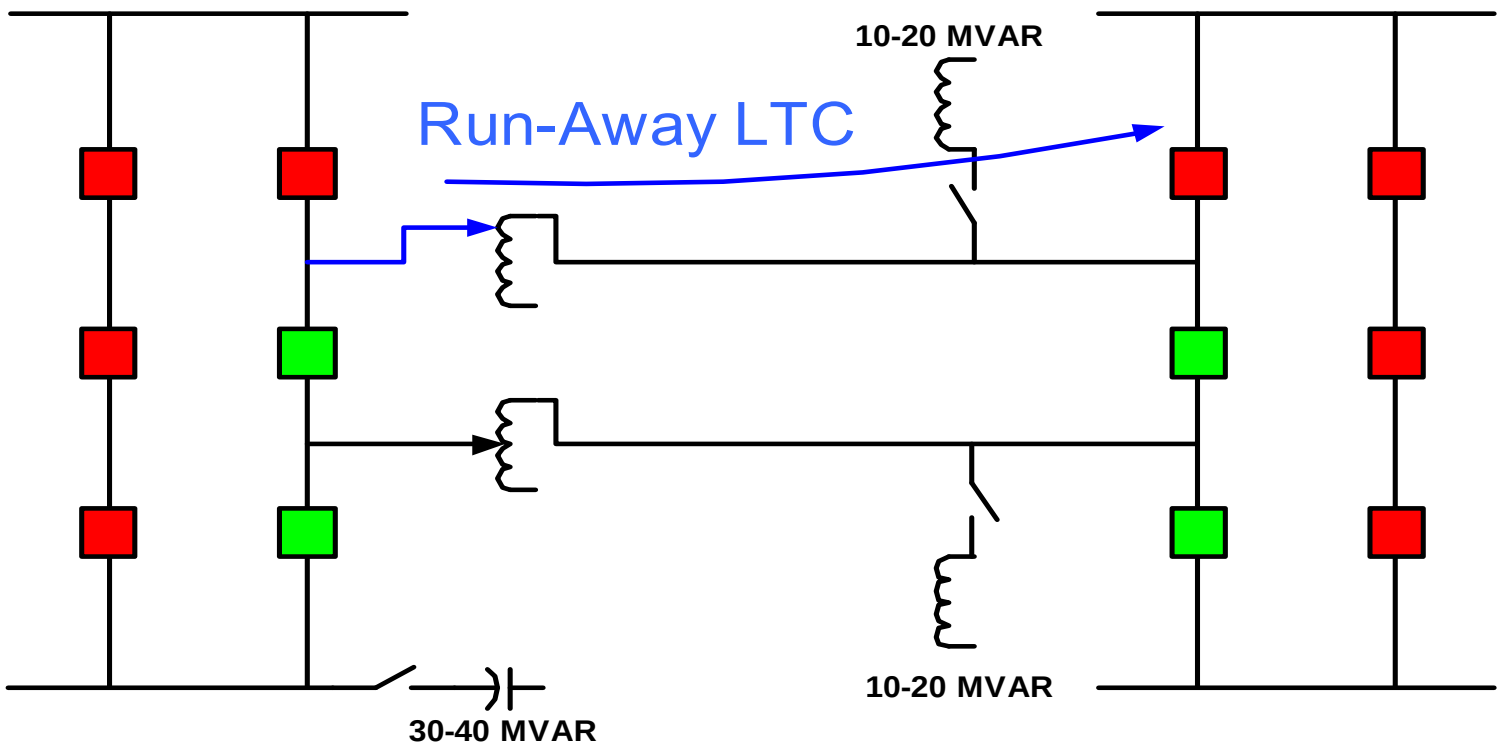

System Control Issues:
Overvoltage and Overexcitation

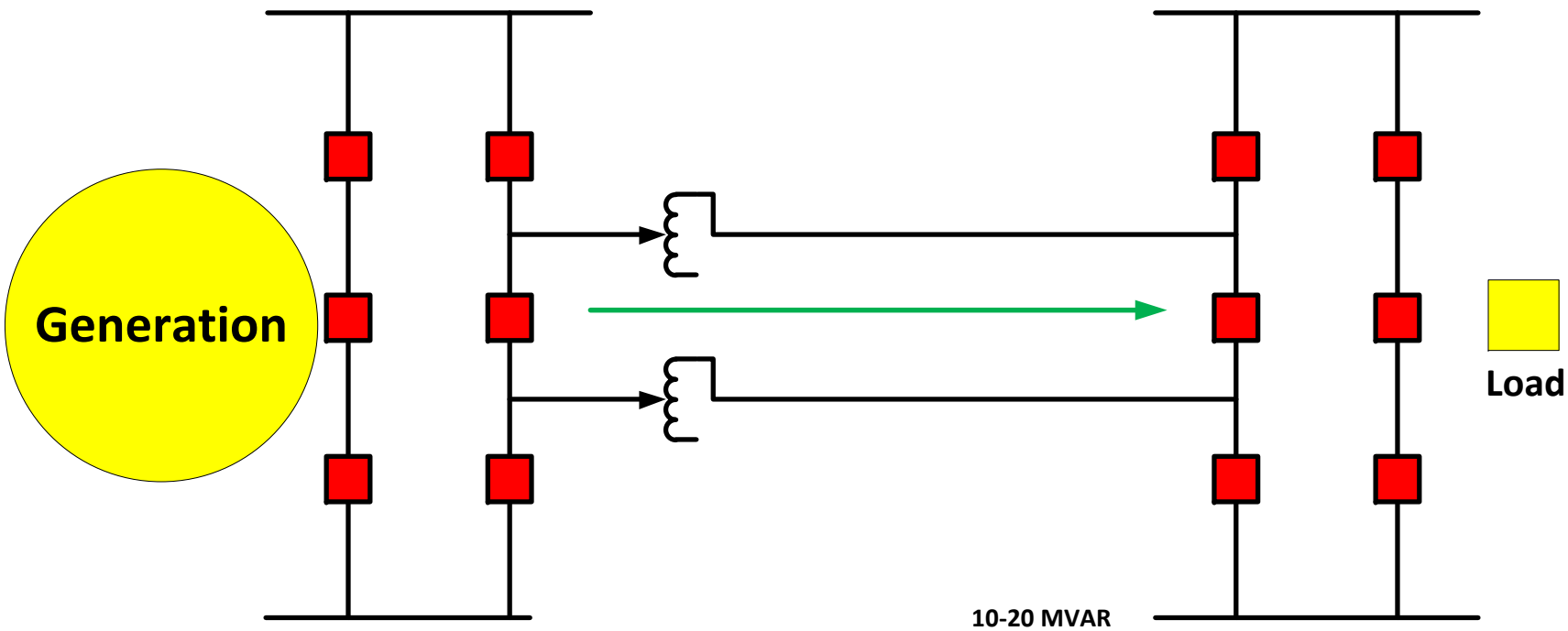

Small Load Trasport (Load Rejection at Remote Area)

1996 WECC Load Rejection Event

Overexcitation Event

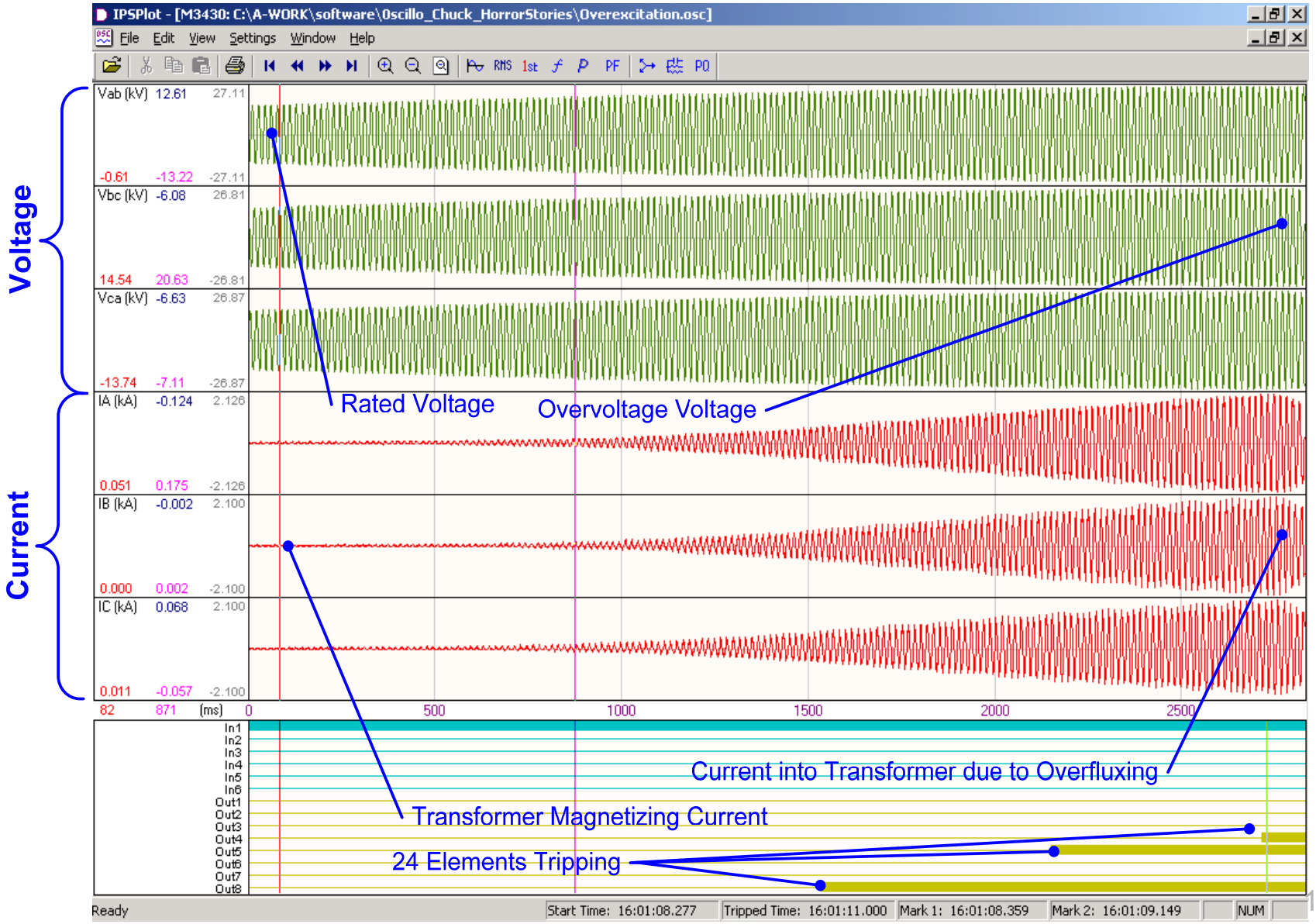

Overexcitation Curves

This is typically how the apparatus manufacturer specifies the V/Hz curves

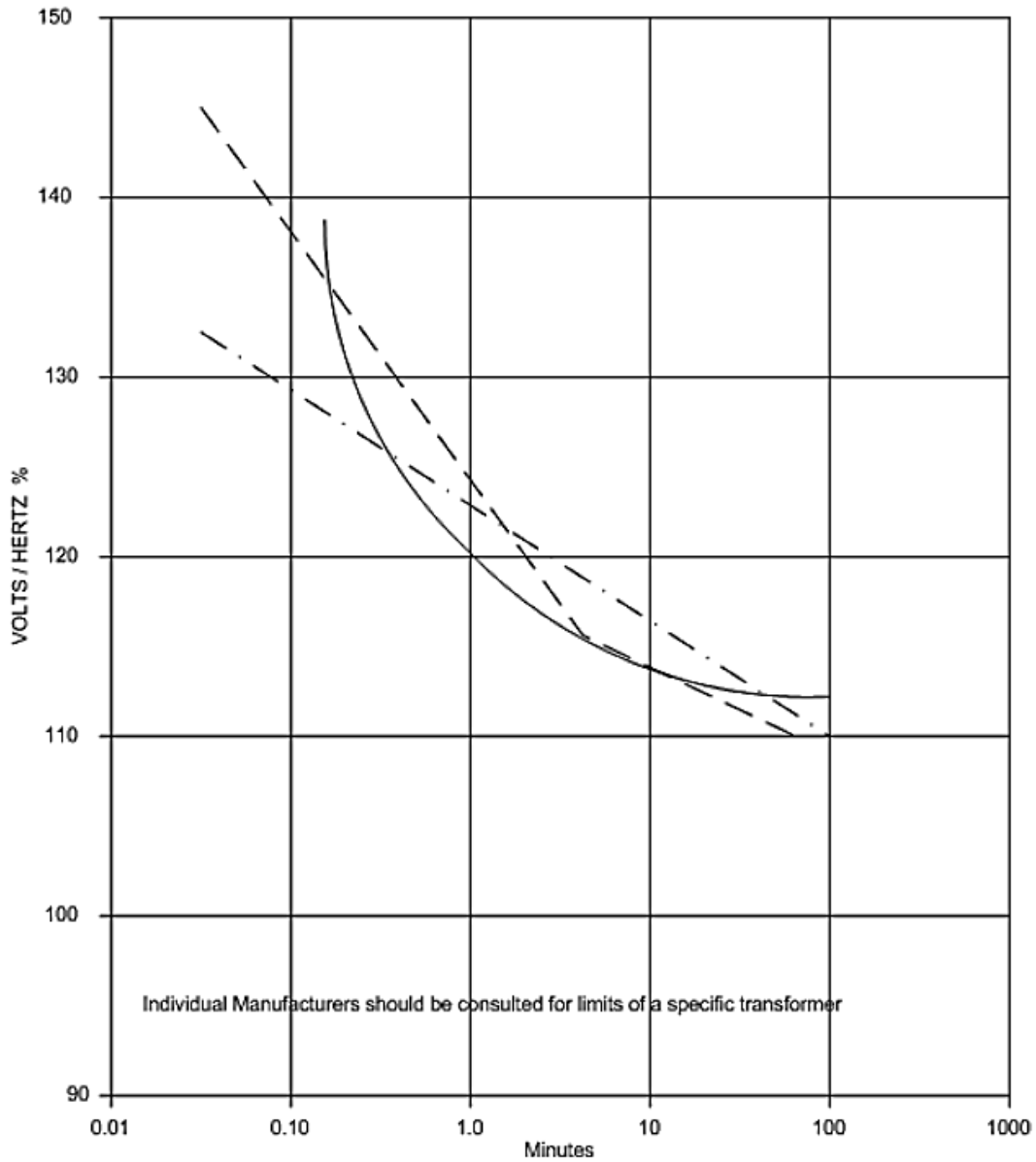

Overexcitation Curves

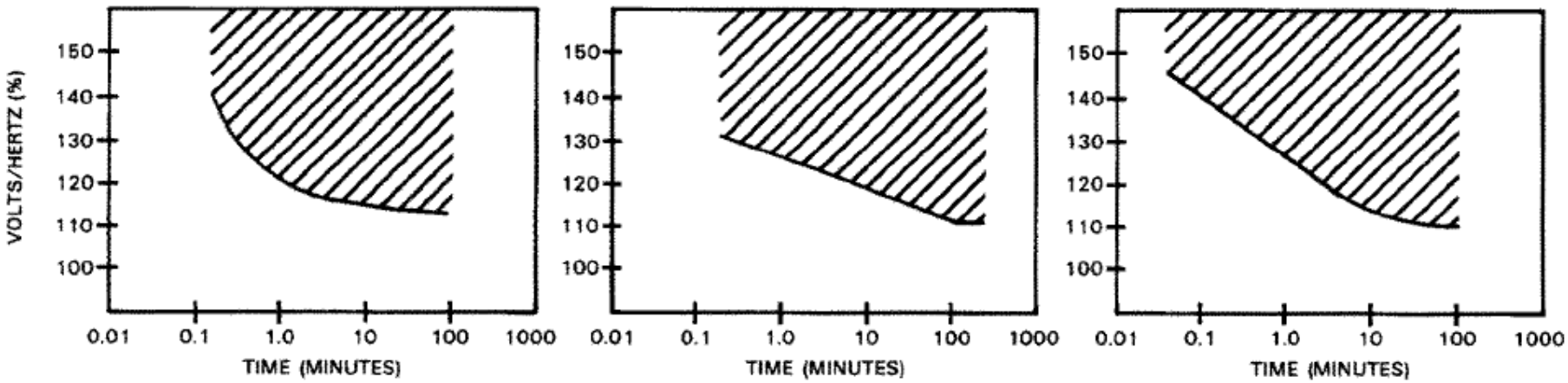

This is typically how the apparatus manufacturer specifies the V/Hz curves

Overexcitation Relay Curves

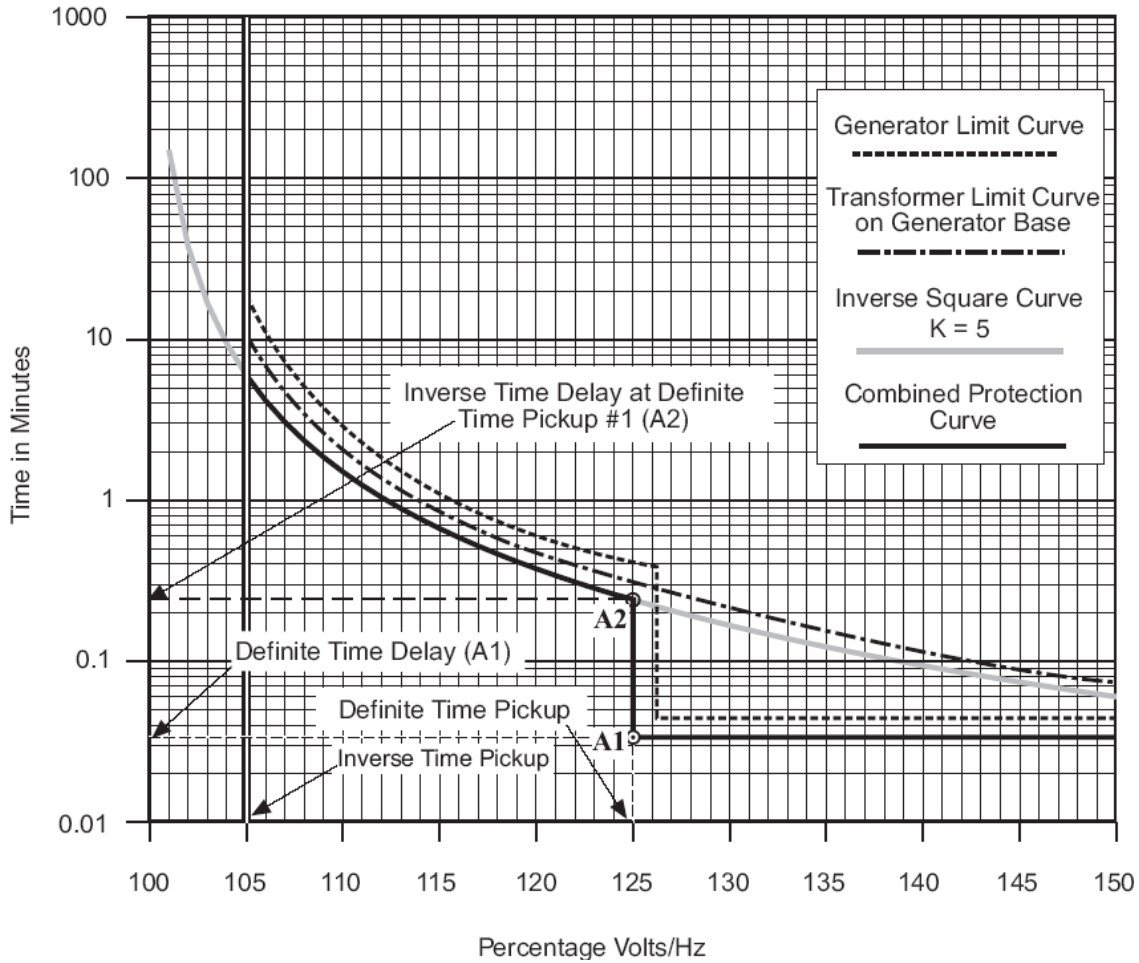

⇒D

This is how protection engineers enter the v/Hz curve into a protective device

Overexcitation (24)

Percent, not volts!

24: Volts/Hz Overexcitation

Definite Time #1

Pickup: 120 (100 – 200 (%))
Time Delay: 30 (30 – 8160 (Cycles))
Disable

Outputs: 1 ☑ 2 3 4 5 6 7 8 9 10 11 12 13 14 15 16
Blocking Inputs: 1 2 3 4 5 6 7 8 9 10 11 12 13 14 15 16 17 18

Definite Time #2

Pickup: 105 (100 – 200 (%))
Time Delay: 600 (30 – 8160 (Cycles))
Disable

Outputs: 1 2 ☑ 3 4 5 6 7 8 9 10 11 12 13 14 15 16
Blocking Inputs: 1 2 3 4 5 6 7 8 9 10 11 12 13 14 15 16 17 18

Inverse Time

Pickup: 107 (100 – 150 (%))
Time Dial: 1 (1 – 100)
Reset Rate: 10 (1 – 999 (Sec))
Enable

Inverse Time Curves: ◉ #1 ○ #2 ○ #3 ○ #4

Outputs: ☑ 1 2 3 4 5 6 7 8 9 10 11 12 13 14 15 16
Blocking Inputs: 1 2 3 4 5 6 7 8 9 10 11 12 13 14 15 16 17 18

Save Cancel

Test Settings
Output 1=trip, Output 2=alarm

Testing Overexcitation Volts/Hz-(24)

Setting is in percentage, Vnom / Fnom = 100%

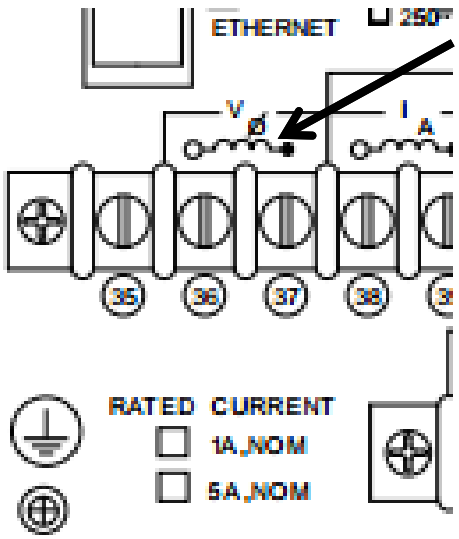

Single Phase Voltage Input

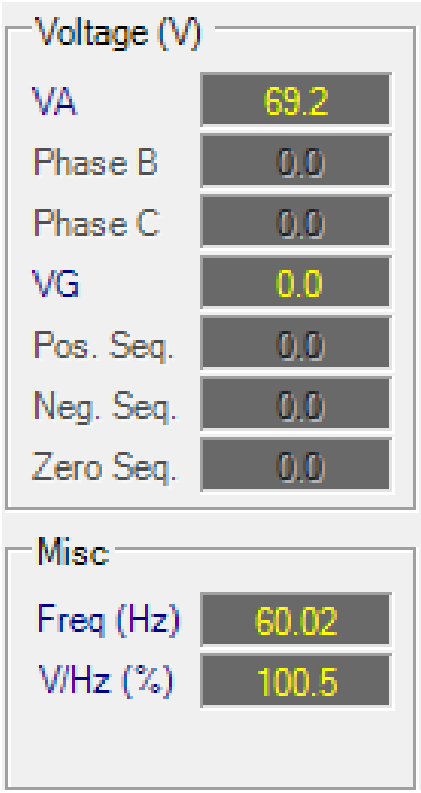

Nominal Voltage

Nominal Freq= 100% V/Hz

Def. Time Overexcitation Volts/Hz-(24)

69 X 1.05=72.45 Alarm out 2 @ 600Cycles
69 X 1.20=82.8 Trip out 1 @ 30 Cycles

Trip time validation for alarm setting

Analog Outputs			
Set Mode	Direct		
V A-N	69.28 V	0.00 °	60.000 Hz

Start with pre-fault

Analog Outputs			
Set Mode	Direct		
V A-N	73.00 V	0.00 °	60.000 Hz

Apply faulted value

Validate trip time

Def. Time Overexcitation Volts/Hz-(24)

69 X 1.05=72.45 Alarm out 2 @ 600Cycles
69 X 1.20=82.8 Trip out 1 @ 30 Cycles

Trip time validation for trip setting

Analog Outputs			
Set Mode	Direct		
V A-N	69.28 V	0.00 °	60.000 Hz

Start with pre-fault

Analog Outputs			
Set Mode	Direct		
V A-N	83.00 V	0.00 °	60.000 Hz

Apply faulted value

Binary Inputs / Trigger				
Trip				41.59 cy

Validate trip time

Def. Time Overexcitation Volts/Hz-(24)

Testing with constant voltage, vary the frequency:

60 X 1.05=63Hz Alarm out 2 @ 600Cycles
60 X 1.20=72Hz Trip out 1 @ 30 Cycles

Rule of thumb when verifying a pick up value:

1. Time between each incremental state > time delay
2. Incremental state should be< tolerance of the element

Questions???