MiCOM
P543, P544, P545 & P546

Current Differential Protection Relay

P54x/EN M/Ka4

Software Version 45 & 55
Hardware Suffix K

Technical Manual

Schneider Electric

Note: The technical manual for this device gives instructions for its installation, commissioning, and operation. However, the manual cannot cover all conceivable circumstances or include detailed information on all topics. In the event of questions or specific problems, do not take any action without proper authorization. Contact the appropriate Schneider Electric technical sales office and request the necessary information.

Any agreements, commitments, and legal relationships and any obligations on the part of Schneider Electric including settlements of warranties, result solely from the applicable purchase contract, which is not affected by the contents of the technical manual.

This device MUST NOT be modified. If any modification is made without the express permission of Schneider Electric, it will invalidate the warranty, and may render the product unsafe.

CONTENTS

SS

SAFETY SECTION

SS

BLANK PAGE

SS

CONTENTS

BLANK PAGE

SS

1. INTRODUCTION

This Safety Section and the relevant equipment documentation provide full information on safe handling, commissioning and testing of this equipment. This Safety Section also includes reference to typical equipment label markings.

The technical data in this Safety Section is typical only, see the technical data section of the relevant equipment documentation for data specific to a particular equipment.

Before carrying out any work on the equipment the user should be familiar with the contents of this Safety Section and the ratings on the equipment's rating label.

Reference should be made to the external connection diagram before the equipment is installed, commissioned or serviced.

Language specific, self-adhesive User Interface labels are provided in a bag for some equipment.

2. HEALTH AND SAFETY

The information in the Safety Section of the equipment documentation is intended to ensure that equipment is properly installed and handled in order to maintain it in a safe condition.

It is assumed that everyone who will be associated with the equipment will be familiar with the contents of this Safety Section, or the Safety Guide (SFTY/4L M).

When electrical equipment is in operation, dangerous voltages will be present in certain parts of the equipment. Failure to observe warning notices, incorrect use, or improper use may endanger personnel and equipment and also cause personal injury or physical damage.

Before working in the terminal strip area, the equipment must be isolated.

Proper and safe operation of the equipment depends on appropriate shipping and handling, proper storage, installation and commissioning, and on careful operation, maintenance and servicing. For this reason only qualified personnel may work on or operate the equipment.

Qualified personnel are individuals who:

- Are familiar with the installation, commissioning, and operation of the equipment and of the system to which it is being connected;
- Are able to safely perform switching operations in accordance with accepted safety engineering practices and are authorized to energize and de-energize equipment and to isolate, ground, and label it;
- Are trained in the care and use of safety apparatus in accordance with safety engineering practices;
- Are trained in emergency procedures (first aid).

The equipment documentation gives instructions for its installation, commissioning, and operation. However, the manuals cannot cover all conceivable circumstances or include detailed information on all topics. In the event of questions or specific problems, do not take any action without proper authorization. Contact the appropriate Schneider Electric technical sales office and request the necessary information.

SS

3. SYMBOLS AND LABELS ON THE EQUIPMENT

For safety reasons the following symbols which may be used on the equipment or referred to in the equipment documentation, should be understood before it is installed or commissioned.

3.1 Symbols

Caution: refer to equipment documentation	Caution: risk of electric shock
Protective Conductor (*Earth) terminal	Functional/Protective Conductor (*Earth) terminal. Note: This symbol may also be used for a Protective Conductor (Earth) Terminal if that terminal is part of a terminal block or sub-assembly e.g. power supply.

***NOTE:** THE TERM EARTH USED THROUGHOUT THIS TECHNICAL MANUAL IS THE DIRECT EQUIVALENT OF THE NORTH AMERICAN TERM GROUND.

3.2 Labels

See Safety Guide (SFTY/4L M) for typical equipment labeling information.

4. INSTALLING, COMMISSIONING AND SERVICING

Equipment connections

Personnel undertaking installation, commissioning or servicing work for this equipment should be aware of the correct working procedures to ensure safety.

The equipment documentation should be consulted before installing, commissioning, or servicing the equipment.

Terminals exposed during installation, commissioning and maintenance may present a hazardous voltage unless the equipment is electrically isolated.

The clamping screws of all terminal block connectors, for field wiring, using M4 screws shall be tightened to a nominal torque of 1.3 Nm.

Equipment intended for rack or panel mounting is for use on a flat surface of a Type 1 enclosure, as defined by Underwriters Laboratories (UL).

Any disassembly of the equipment may expose parts at hazardous voltage, also electronic parts may be damaged if suitable electrostatic voltage discharge (ESD) precautions are not taken.

If there is unlocked access to the rear of the equipment, care should be taken by all personnel to avoid electric shock or energy hazards.

Voltage and current connections shall be made using insulated crimp terminations to ensure that terminal block insulation requirements are maintained for safety.

Watchdog (self-monitoring) contacts are provided in numerical relays to indicate the health of the device. Schneider Electric strongly recommends that these contacts are hardwired into the substation's automation system, for alarm purposes.

To ensure that wires are correctly terminated the correct crimp terminal and tool for the wire size should be used.

The equipment must be connected in accordance with the appropriate connection diagram.

Protection Class I Equipment

- Before energizing the equipment it must be earthed using the protective conductor terminal, if provided, or the appropriate termination of the supply plug in the case of plug connected equipment.
- The protective conductor (earth) connection must not be removed since the protection against electric shock provided by the equipment would be lost.
- When the protective (earth) conductor terminal (PCT) is also used to terminate cable screens, etc., it is essential that the integrity of the protective (earth) conductor is checked after the addition or removal of such functional earth connections. For M4 stud PCTs the integrity of the protective (earth) connections should be ensured by use of a locknut or similar.

The recommended minimum protective conductor (earth) wire size is 2.5 mm² (3.3 mm² for North America) unless otherwise stated in the technical data section of the equipment documentation, or otherwise required by local or country wiring regulations.

The protective conductor (earth) connection must be low-inductance and as short as possible.

All connections to the equipment must have a defined potential. Connections that are pre-wired, but not used, should preferably be grounded when binary inputs and output relays are isolated. When binary inputs and output relays are connected to common potential, the pre-wired but unused connections should be connected to the common potential of the grouped connections.

Before energizing the equipment, the following should be checked:

- Voltage rating/polarity (rating label/equipment documentation);
- CT circuit rating (rating label) and integrity of connections;
- Protective fuse rating;
- Integrity of the protective conductor (earth) connection (where applicable);
- Voltage and current rating of external wiring, applicable to the application.

Accidental touching of exposed terminals

If working in an area of restricted space, such as a cubicle, where there is a risk of electric shock due to accidental touching of terminals which do not comply with IP20 rating, then a suitable protective barrier should be provided.

Equipment use

If the equipment is used in a manner not specified by the manufacturer, the protection provided by the equipment may be impaired.

Removal of the equipment front panel/cover

Removal of the equipment front panel/cover may expose hazardous live parts, which must not be touched until the electrical power is removed.

SS

UL and CSA/CUL listed or recognized equipment

To maintain UL and CSA/CUL Listing/Recognized status for North America the equipment should be installed using UL and/or CSA Listed or Recognized parts for the following items: connection cables, protective fuses/fuseholders or circuit breakers, insulation crimp terminals, and replacement internal battery, as specified in the equipment documentation.

For external protective fuses a UL or CSA Listed fuse shall be used. The Listed type shall be a Class J time delay fuse, with a maximum current rating of 15 A and a minimum d.c. rating of 250 Vd.c. for example type AJT15.

Where UL or CSA Listing of the equipment is not required, a high rupture capacity (HRC) fuse type with a maximum current rating of 16 Amps and a minimum d.c. rating of 250 Vd.c. may be used, for example Red Spot type NIT or TIA.

Equipment operating conditions

The equipment should be operated within the specified electrical and environmental limits.

Current transformer circuits

Do not open the secondary circuit of a live CT since the high voltage produced may be lethal to personnel and could damage insulation. Generally, for safety, the secondary of the line CT must be shorted before opening any connections to it.

For most equipment with ring-terminal connections, the threaded terminal block for current transformer termination has automatic CT shorting on removal of the module. Therefore external shorting of the CTs may not be required, the equipment documentation should be checked to see if this applies.

For equipment with pin-terminal connections, the threaded terminal block for current transformer termination does NOT have automatic CT shorting on removal of the module.

External resistors, including voltage dependent resistors (VDRs)

Where external resistors, including voltage dependent resistors (VDRs), are fitted to the equipment, these may present a risk of electric shock or burns, if touched.

Battery replacement

Where internal batteries are fitted they should be replaced with the recommended type and be installed with the correct polarity to avoid possible damage to the equipment, buildings and persons.

Insulation and dielectric strength testing

Insulation testing may leave capacitors charged up to a hazardous voltage. At the end of each part of the test, the voltage should be gradually reduced to zero, to discharge capacitors, before the test leads are disconnected.

Insertion of modules and pcb cards

Modules and PCB cards must not be inserted into or withdrawn from the equipment whilst it is energized, since this may result in damage.

Insertion and withdrawal of extender cards

Extender cards are available for some equipment. If an extender card is used, this should not be inserted or withdrawn from the equipment whilst it is energized. This is to avoid possible shock or damage hazards. Hazardous live voltages may be accessible on the extender card.

SS

External test blocks and test plugs

Great care should be taken when using external test blocks and test plugs such as the MMLG, MMLB and MiCOM P990 types, hazardous voltages may be accessible when using these. *CT shorting links must be in place before the insertion or removal of MMLB test plugs, to avoid potentially lethal voltages.

*Note: When a MiCOM P992 Test Plug is inserted into the MiCOM P991 Test Block, the secondaries of the line CTs are automatically shorted, making them safe.

Fiber optic communication

Where fiber optic communication devices are fitted, these should not be viewed directly. Optical power meters should be used to determine the operation or signal level of the device.

Cleaning

The equipment may be cleaned using a lint free cloth dampened with clean water, when no connections are energized. Contact fingers of test plugs are normally protected by petroleum jelly, which should not be removed.

5. DE-COMMISSIONING AND DISPOSAL

De-commissioning

The supply input (auxiliary) for the equipment may include capacitors across the supply or to earth. To avoid electric shock or energy hazards, after completely isolating the supplies to the equipment (both poles of any dc supply), the capacitors should be safely discharged via the external terminals prior to de-commissioning.

Disposal

It is recommended that incineration and disposal to water courses is avoided. The equipment should be disposed of in a safe manner. Any equipment containing batteries should have them removed before disposal, taking precautions to avoid short circuits. Particular regulations within the country of operation, may apply to the disposal of the equipment.

SS

6. TECHNICAL SPECIFICATIONS FOR SAFETY

Unless otherwise stated in the equipment technical manual, the following data is applicable.

6.1 Protective fuse rating

The recommended maximum rating of the external protective fuse for equipments is 16A, high rupture capacity (HRC) Red Spot type NIT, or TIA, or equivalent. The protective fuse should be located as close to the unit as possible.

DANGER - CTs must NOT be fused since open circuiting them may produce lethal hazardous voltages.

6.2 Protective class

IEC 60255-27: 2005	Class I (unless otherwise specified in the equipment documentation).
EN 60255-27: 2005	This equipment requires a protective conductor (earth) connection to ensure user safety.

6.3 Installation category

IEC 60255-27: 2005	Installation category III (Overvoltage Category III):
EN 60255-27: 2005	Distribution level, fixed installation.
	Equipment in this category is qualification tested at 5 kV peak, 1.2/50 µs, 500 Ω, 0.5 J, between all supply circuits and earth and also between independent circuits.

6.4 Environment

The equipment is intended for indoor installation and use only. If it is required for use in an outdoor environment then it must be mounted in a specific cabinet of housing which will enable it to meet the requirements of IEC 60529 with the classification of degree of protection IP54 (dust and splashing water protected).

Pollution Degree - Pollution Degree 2 Compliance is demonstrated by reference to safety Altitude - Operation up to 2000m standards.

IEC 60255-27:2005

EN 60255-27: 2005

IT

INTRODUCTION

Date:	**16th March 2009**
Hardware suffix:	**K**
Software version:	**45 (P543/4/5/6 without Distance)** **55 (P543/4/5/6 with Distance)**
Connection diagrams:	**10P54302 (SH 1 to 2)** **10P54303 (SH 1 to 2)** **10P54400** **10P54404 (SH 1 to 2)** **10P54405 (SH 1 to 2)** **10P54502 (SH 1 to 2)** **10P54503 (SH 1 to 2)** **10P54600** **10P54604 (SH 1 to 2)** **10P54605 (SH 1 to 2)** **10P54606 (SH 1 to 2)**

IT

CONTENTS

(IT) 1-

IT

FIGURES

IT

1. MICOM DOCUMENTATION STRUCTURE

The manual provides a functional and technical description of the P54x differential and distance protection relay and a comprehensive set of instructions for the relay's use and application.

The chapter contents are summarized below:

P54x/EN IT Introduction

A guide to the P54x range of distance relays and the documentation structure. General safety aspects of handling Electronic Equipment is discussed with particular reference to relay safety symbols. Also a general functional overview of the relay and brief application summary is given.

P54x/EN TD Technical Data

Technical data including setting ranges, accuracy limits, recommended operating conditions, ratings and performance data. Compliance with norms and international standards is quoted where appropriate.

P54x/EN GS Getting Started

A guide to the different user interfaces of the protection relay describing how to start using it. This chapter provides detailed information regarding the communication interfaces of the relay, including a detailed description of how to access the settings database stored within the relay.

P54x/EN ST Settings

List of all relay settings, including ranges, step sizes and defaults, together with a brief explanation of each setting.

P54x/EN OP Operation

A comprehensive and detailed functional description of all protection and non-protection functions.

P54x/EN AP Application Notes

This chapter includes a description of common power system applications of the relay, calculation of suitable settings, some typical worked examples, and how to apply the settings to the relay.

P54x/EN PL Programmable Logic

Overview of the programmable scheme logic and a description of each logical node. This chapter includes the factory default (PSL) and an explanation of typical applications.

P54x/EN MR Measurements and Recording

Detailed description of the relays recording and measurements functions including the configuration of the event and disturbance recorder and measurement functions.

P54x/EN FD Firmware Design

Overview of the operation of the relay's hardware and software. This chapter includes information on the self-checking features and diagnostics of the relay.

P54x/EN CM Commissioning

Instructions on how to commission the relay, comprising checks on the calibration and functionality of the relay.

P54x/EN MT Maintenance

A general maintenance policy for the relay is outlined.

P54x/EN TS Troubleshooting

Advice on how to recognize failure modes and the recommended course of action. Includes guidance on whom within Schneider Electric to contact for advice.

P54x/EN SC SCADA Communications

This chapter provides an overview regarding the SCADA communication interfaces of the relay. Detailed protocol mappings, semantics, profiles and interoperability tables are not provided within this manual. Separate documents are available per protocol, available for download from our website.

P54x/EN SG Symbols and Glossary

List of common technical abbreviations found within the product documentation.

P54x/EN IN Installation

Recommendations on unpacking, handling, inspection and storage of the relay. A guide to the mechanical and electrical installation of the relay is provided, incorporating earthing recommendations. All external wiring connections to the relay are indicated.

P54x/EN VH Firmware and Service Manual Version History

History of all hardware and software releases for the product.

2. INTRODUCTION TO MICOM

MiCOM is a comprehensive solution capable of meeting all electricity supply requirements. It comprises a range of components, systems and services from Schneider Electric.

Central to the MiCOM concept is flexibility.

MiCOM provides the ability to define an application solution and, through extensive communication capabilities, integrate it with your power supply control system.

The components within MiCOM are:

- P range protection relays;
- C range control products;
- M range measurement products for accurate metering and monitoring;
- S range versatile PC support and substation control packages.

MiCOM products include extensive facilities for recording information on the state and behavior of the power system using disturbance and fault records. They can also provide measurements of the system at regular intervals to a control center enabling remote monitoring and control to take place.

For up-to-date information on any MiCOM product, visit our website:

www.schneider-electric.com

IT

3. PRODUCT SCOPE

The P54x is designed for all overhead line and cable applications, as it interfaces readily with the longitudinal (end-end) communications channel between line terminals.

P54x includes a high-speed current differential unit protection with optional high performance sub cycle distance protection including phase segregated aided directional earth fault DEF. Four P54x models are offered:

The distance option is independent of the hardware configuration and is specified by means of the software number (refer to the ordering options in section 3.2).

P543 and P545:

Features included only in the P543 and P545 models are: Differential for Plain and Transformer Feeders.

P543 in (60TE /12”) with 16 inputs and 14 standard outputs (or 7 standard and 4 high break outputs option).

P545 in (80TE /19”) with 24 inputs and 32 standard outputs (or 16 standard and 8 high break outputs option).

P544 and P546:

Features included only in the P544 and P546 models are Differential for Mesh Corner.

P544 in (60TE /12”) with 16 inputs and 14 standard outputs (or 7 standard and 4 high break. outputs option)

P546 in (80TE /19”) with 24 inputs and 32 standard outputs (or 16 standard and 8 high break outputs, or 8 standard and 12 high break outputs options).

3.1 Functional overview

The P54x distance relay contains a wide variety of protection functions. The protection features are summarized below:

		Models			
ANSI	**FEATURE**	**P543**	**P544**	**P545**	**P546**
	Optocoupled digital inputs	16	16	24	24
	Standard relay output contacts	14	14	32	32
	Standard and high break output contacts	(11)	(11)	(24)	(24) (20)
	Dual rated 1A and 5A CT inputs	•	•	•	•
	Tripping Mode - single or three pole	•	•	•	•
	ABC and ACB phase rotation	•	•	•	•
	Multiple password access control levels	•	•	•	•
87	Phase segregated current differential	•	•	•	•
	2 and 3 terminal lines/cables	•	•	•	•
	Feeders with in-zone transformers	•		•	
	Control of dual circuit breakers		•		•
	Suitable for use with SDH/SONET networks (using P594)	•	•	•	•
	InterMiCOM^{64} teleprotection for direct relay-relay communication	•	•	•	•
21P/21G	Distance zones, full-scheme protection	(5)	(5)	(5)	(5)

IT

			Models			
ANSI	**FEATURE**		**P543**	**P544**	**P545**	**P546**
	Characteristic	Phase elements	Mho and quadrilateral			
		Ground elements				
	CVT transient overreach elimination		•	•	•	•
	Load blinder		•	•	•	•
	Easy setting mode		•	•	•	•
	Mutual compensation (for fault locator and distance zones)		•	•	•	•
85	Communication-aided schemes, PUTT, POTT, Blocking, Weak Infeed		•	•	•	•
	Accelerated tripping - loss of load and Z1 extension		•	•	•	•
50/27	Switch on to fault and trip on recluse - elements for fast fault clearance upon breaker closure		•	•	•	•
68	Power swing blocking		•	•	•	•
78	Out of step		•	•	•	•
67N	Directional earth fault (DEF) unit protection		•	•	•	•
50/51/67	Phase overcurrent stages, with optional directionality		4	4	4	4
50N/51N/ 67N	Earth/ground overcurrent stages, with optional directionality		4	4	4	4
51N/67N/SEF	Sensitive earth fault (SEF		4	4	4	4
67/46	Negative sequence overcurrent stages, with optional directionality		•	•	•	•
46BC	Broken conductor (open jumper), used to detect open circuit faults		•	•	•	•
49	Thermal overload protection		•	•	•	•
27	Undervoltage protection stages		2	2	2	2
59	Overvoltage protection stages		2	2	2	2
59 Remote	Remote overvoltage protection stages		2	2	2	2
59N	Residual voltage stages (neutral displacement)		2	2	2	2
81U/O/R	A 4-stage underfrequency, 2-stage overfrequency and an advanced 4-stage rate of change of frequency element as well.		•	•	•	•
50BF	High speed breaker fail. Two-stage, suitable for re-tripping and backtripping		•	•	•	•
CTS	CT supervision (including differential CTS, patent pending)		•	•	•	•
VTS	Current and voltage transformer supervision		•	•	•	•
79	Auto-reclose - shots supported		4	4	4	4

IT

		Models			
ANSI	**FEATURE**	**P543**	**P544**	**P545**	**P546**
25	Check synchronism, 2 stages	•	•	•	•
	Alternative setting groups	4	4	4	4
FL	Fault locator	•	•	•	•
	SOE event records	512	512	512	512
	Disturbance recorder, samples per cycle. For waveform capture	48	48	48	48
	Circuit breaker condition monitoring	•	•	•	•
	Graphical programmable scheme logic (PSL)	•	•	•	•
	IRIG-B time synchronism	(•)	(•)	(•)	(•)
	Second rear communication port	(•)	(•)	(•)	(•)
	High speed, high break (HB) contacts	(•)	(•)	(•)	(•)

The P54x supports the following relay management functions in addition to the functions illustrated above.

- Measurement of all instantaneous & integrated values
- Circuit breaker control, status & condition monitoring
- Trip circuit and coil supervision
- Programmable hotkeys (2)
- Control inputs
- Programmable allocation of digital inputs and outputs
- Fully customizable menu texts
- Power-up diagnostics and continuous self-monitoring of relay

IT

Application overview

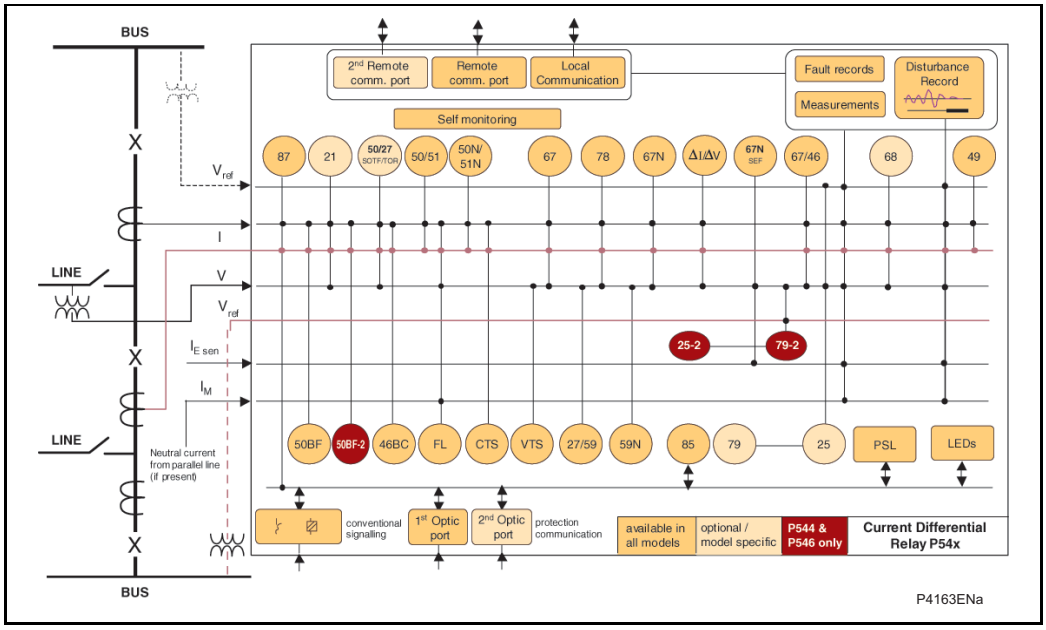

Figure 1 Functional diagram

IT

3.2 Ordering options

Information Required with Order

P54x Current differential protection **P54** | | | | | | | | | | | | **K**

Current Differential for single breaker (60TE/12”)	3
Current Differential for dual breaker (60TE/12”)	4
Current Differential for single breaker (80TE/12”)	5
Current Differential for dual breaker (80TE/12”)	6

Auxiliary voltage rating

24 - 48 Vdc	1
48 - 125 Vdc (40 -100Vac)	2
110 - 250 Vdc (100- 240Vac)	3

In/Vn rating

Dual rated CT (1 & 5A: 100 - 120V)	1

Hardware options

Standard - none	1
IRIG-B only (Modulated)	2
Fiber optic converter only	3
IRIG-B (Modulated) & fiber optic converter	4
Ethernet (10 Mbps)	5
Ethernet (100 Mbps)	6
Second Rear Comms	7
IRIG-B (Modulated) + Second Rear Comms	8
Ethernet (100 Mbps) plus IRIG-B (Modulated)	A
Ethernet (100 Mbps) plus IRIG-B (De-modulated)	B
IRIG-B (De-modulated)	C

Product specific

850 nm dual channel	A
1300 nm SM single channel	B
1300 nm SM dual channel	C
1300 nm MM single channel	D
1300 nm MM dual channel	E
1550 nm SM single channel	F
1550 nm SM dual channel	G
850 nm MM + 1300 nm SM	H
850 nm dual channel + 32 Inputs (Note 1)	I
850 nm dual channel + 8 std + 12hb (Note 2)	I
850 nm MM + 1300 nm MM	J
850 nm MM + 1550 nm SM	K
1300 nm SM + 850 nm MM	L
1300 nm MM + 850 nm MM	M
1300 nm SM single channel + 32 Inputs (Note 1)	N
1300 nm SM single channel + 8 std + 12hb (Note 2)	N
1300 nm SM dual channel + 32 Inputs (Note 1)	O
1300 nm SM dual channel + 8 std + 12hb (Note 2)	O
1300 nm MM single channel + 32 Inputs (Note 1)	P
1300 nm MM single channel + 8 std + 12hb (Note 2)	P
1300 nm MM dual channel + 32 Inputs (Note 1)	Q
1300 nm MM dual channel + 8 std + 12hb (Note 2)	Q
1550 nm SM + 850 nm MM	R
850 nm dual channel + High Break	S
1300 nm SM single channel + High Break	T
1300 nm SM dual channel + High Break	U
1300 nm MM single channel + High Break	V
1300 nm MM dual channel + High Break	W
1550 nm SM single channel + High Break	X
1550 nm SM single channel + High Break	Z
850 nm MM + 1300 nm SM + High Break	0
850 nm MM + 1300 nm MM + High Break	1
850 nm MM + 1550 nm SM + High Break	2
1300 nm SM + 850 nm MM + High Break	3
1300 nm MM + 850 nm MM + High Break	4
1550 nm SM + 850 nm MM + High Break	5
1550 nm SM single channel + 32 Inputs (Note 1)	8
1550 nm SM single channel + 8std + 12hb (Note 2)	8
1550 nm SM single channel + 32 Inputs (Note 1)	9
1550 nm SM single channel + 8std + 12hb (Note 2)	9

IT

Protocol options	
K-Bus	1
IEC60870-5-103 (VDEW)	3
DNP3.0	4
IEC 61850 + Courier via rear EIA(RS)485 port	6
IEC 61850 + IEC 60870-5-103 via rear EIA(RS)485 port	7
DNP3.0 over ethernet	8
Mounting	
Flush Panel	M
Rack (P545, P546 only)	N
Language options	
Multilingual - English, French, German, Spanish	0
Multilingual - English, French, German, Russian	5
Multilingual - Chinese, English or French via HMI,with English or French only via Communications port	C
Software number	
P543/P545 Without Distance	45
P543/P545 With Distance	55
P544/P546 Without Distance	45
P544/P546 With Distance	55
Settings file	
Default	0
Customer	A
Hardware suffix	
Note 3.	K

Note 1: Option applies to P545 only.

Note 2: Option applies to P546 only

Note 3:

A = Original

B = Universal Optos, New Relays, New Co-Processor Board, New PSU

G = CPU2

J = Dual Rated Optos

K = Extended CPU2

For up-to-date information on the cortec, please visit the website.

IT

TD

TECHNICAL DATA

Date:	**16th March 2009**
Hardware suffix:	**K**
Software version:	**45 (P543/4/5/6 without Distance)** **55 (P543/4/5/6 with Distance)**
Connection diagrams:	**10P54302 (SH 1 to 2)** **10P54303 (SH 1 to 2)** **10P54400** **10P54404 (SH 1 to 2)** **10P54405 (SH 1 to 2)** **10P54502 (SH 1 to 2)** **10P54503 (SH 1 to 2)** **10P54600** **10P54604 (SH 1 to 2)** **10P54605 (SH 1 to 2)** **10P54606 (SH 1 to 2)**

TD

Technical data

Mechanical specifications

Design
Modular MiCOM Px40 platform relay, available in 2 different case sizes:

P543 and P544: 60TE, front of panel flush mounting, or 19” rack mounted (ordering options).

P545 and P546: 80TE, front of panel flush mounting, or 19” rack mounted (ordering options).

Enclosure protection
Per IEC 60529: 1989 (Ask Dev)
IP 52 Protection (front panel) against dust and dripping water.
IP 30 Protection for sides of the case.
IP 10 Protection for the rear.

Weight
P543 approx. 9.2 kg
P544 approx. 11.5 kg
P545 approx. 11 kg
P546 approx. 13.1 kg

Terminals

AC current and voltage measuring inputs
Located on heavy duty (black) terminal block:
Threaded M4 terminals, for ring lug connection.
CT inputs have integral safety shorting, upon removal of the terminal block.

General input/output terminals
For power supply, opto inputs, output contacts and COM1 rear communications.
Located on general purpose (grey) blocks:
Threaded M4 terminals, for ring lug connection.

Case protective earth connection
Two rear stud connections, threaded M4.
Must be earthed (grounded) for safety, minimum earth wire size 2.5 mm^2.

Front port serial PC interface
EIA(RS)232 DTE, 9 pin D-type female connector.
Courier protocol for interface to MiCOM S1 Studio software.
Isolation to ELV level.
Maximum cable length 15 m.

Front download/monitor port
EIA(RS)232, 25 pin D-type female connector.
For firmware downloads.
Isolation to ELV level.

Rear communications port
EIA(RS)485 signal levels, two wire
Connections located on general purpose block, M4 screw.
For screened twisted pair cable, multi-drop, 1000 m max.
For K-Bus, IEC-870-5-103, or DNP3 protocol (ordering options).
Isolation to SELV level.

Optional second rear communications port
EIA(RS)232, 9 pin D-type female connector, socket SK4.
Courier protocol: K-Bus, EIA(RS)232, or EIA(RS)485 connection.
Isolation to SELV level.

Optional rear IRIG-B Interface modulated or un-modulated
BNC socket
Isolation to SELV level.
50 ohm coaxial cable.

Optional rear fiber connection for SCADA/DCS
BFOC 2.5 -(ST®)-interface for glass fiber, as per IEC 874-10.
850 nm short-haul fibers, one Tx and one Rx.
For Courier, IEC-870-5-103 or DNP3 protocol (ordering options).

Optional rear Ethernet connection for IEC 61850

10BaseT/100BaseTX communications
Interface in accordance with IEEE802.3 and IEC 61850
Isolation: 1.5 kV
Connector type: RJ45
Cable type: Screened Twisted Pair (STP)
Max. cable length: 100 m

100 Base FX interface
Interface in accordance with IEEE802.3 and IEC 61850
Wavelength: 1300 nm
Fiber: multi-mode 50/125 µm or 62.5/125 µm
Connector type: BFOC 2.5 -(ST®)

TD

TD

Ratings

AC measuring inputs
Nominal frequency: 50 and 60 Hz (settable)
Operating range: 45 to 65 Hz
Phase rotation: ABC or CBA

AC current
Nominal current (In): 1 and 5 A dual rated.
(1 A and 5 A inputs use different transformer tap connections, check correct terminals are wired).
Nominal burden per phase: < 0.15 VA at In
Thermal withstand:
continuous 4 In
for 10 s: 30 In
for 1 s; 100 In
Linear to 64 In (non-offset AC current).

AC voltage
Nominal voltage (Vn): 100 to 120 V phase-phase.
Nominal burden per phase: < 0.02 VA at Vn.
Thermal withstand:
continuous 2 Vn
for 10 s: 2.6 Vn

Power supply

Auxiliary voltage (Vx)
Three ordering options:
(i) Vx: 24 to 48 Vdc
(ii) Vx: 48 to 110 Vdc, and 40 to 100 Vac (rms)
(iii) Vx: 110 to 250 Vdc, and 100 to 240 Vac (rms)

Operating range
(i) 19 to 65 V (dc only for this variant)
(ii) 37 to 150 V (dc), 32 to 110 V (ac)
(iii) 87 to 300 V (dc), 80 to 265 V (ac)
With a tolerable ac ripple of up to 12% for a dc supply, per IEC 60255-11: 1979.

Nominal burden
Quiescent burden: 11W. (Extra 1.25 W when fitted with second rear communications board)
Additions for energized binary inputs/outputs:
Per opto input:
0.09 W (24 to 54 V),
0.12 W (110/125 V),
0.19 W (220/120 V).
Per energized output relay: 0.13 W

Power-up time
Time to power up < 11 s.

Power supply interruption
Per IEC 60255-11: 1979
The relay will withstand a 20 ms interruption in the DC auxiliary supply, without de-energizing.
Per IEC 61000-4-11: 1994
The relay will withstand a 20 ms interruption in an AC auxiliary supply, without de-energizing.

Battery backup
Front panel mounted
Type ½ AA, 3.6 V Lithium Thionyl Chloride Battery

Field voltage output
Regulated 48 Vdc
Current limited at 112 mA maximum output

Digital ("Opto") inputs
Universal opto inputs with programmable voltage thresholds. May be energized from the 48V field voltage, or the external battery supply.
Rated nominal voltage: 24 to 250 Vdc
Operating range: 19 to 265 Vdc
Withstand: 300 Vdc.
Nominal pick-up and reset thresholds:
Nominal Battery 24/27: 60 - 80% DO/PU
(logic 0) <16.2 (logic 1) >19.2
Nominal Battery 24/27: 50 - 70% DO/PU
(logic 0) <12.0 (logic 1) >16.8
Nominal Battery 30/34: 60 - 80% DO/PU
(logic 0) <20.4 (logic 1) >24.0
Nominal Battery 30/34: 50 - 70% DO/PU
(logic 0) <15.0 (logic 1) >21.0
Nominal Battery 48/54: 60 - 80% DO/PU
(logic 0) <32.4 (logic 1) >38.4
Nominal Battery 48/54: 50 - 70% DO/PU
(logic 0) <24.0 (logic 1) >33.6
Nominal Battery 110/125: 60 - 80% DO/PU
(logic 0) <75.0 (logic 1) >88.0
Nominal Battery 110/125: 50 - 70% DO/PU
(logic 0) <55.0 (logic 1) >77.0
Nominal Battery 220/250: 60 - 80% DO/PU
(logic 0) <150.0 (logic 1) >176.0
Nominal Battery 220/250: 50 - 70% DO/PU
(logic 0) <110 (logic 1) >154
Recognition time:
<2 ms with long filter removed,
<12 ms with half-cycle ac immunity filter on.

Output contacts

Standard contacts
General purpose relay outputs for signaling, tripping and alarming:
Continuous Carry Ratings (Not Switched):
Maximum continuous current: 10 A (UL: 8 A)
Short duration withstand carry: 30 A for 3 s
250 A for 30 ms
Rated voltage: 300 V

Make & Break Capacity:
DC: 50 W resistive
DC: 62.5 W inductive (L/R = 50 ms)
AC: 2500 VA resistive (cos ϕ = 0.7 unity)
AC: 2500 VA inductive (cos ϕ = 0.7)

Make, Carry:
30A for 3 secs, dc resistive, 10,000 operations (subject to the above limits of make / break capacity and rated voltage)

Make, Carry & Break:
30 A for 200 ms, ac resistive, 2,000 operations (subject to the above limits of make / break capacity & rated voltage)
4 A for 1.5 secs, dc resistive, 10,000 operations (subject to the above limits of make / break capacity & rated voltage)

0.5 A for 1 sec, dc inductive, 10,000 operations (subject to the above limits of make / break capacity & rated voltage)

10 A for 1.5 secs, ac resistive / inductive, 10,000 operations (subject to the above limits of make / break capacity & rated voltage)

Durability:
Loaded contact: 10 000 operations minimum,
Unloaded contact: 100 000 operations minimum.

Operate Time
Less than 5 ms
Reset Time
Less than 5 ms

High break contacts (option)
Continuous Carry Ratings (Not Switched):
Maximum continuous current: 10 A
Short duration withstand carry: 30 A for 3 s
250 A for 30 ms
Rated voltage: 300 V

Make & Break Capacity:
DC: 7500 W resistive
DC: 2500 W inductive (L/R = 50 ms)

Make, Carry:
30 A for 3 secs, dc resistive, 10,000 operations (subject to the above limits of make / break capacity & rated voltage)

Make, Carry & Break:
30 A for 3 secs, dc resistive, 5,000 operations (subject to the above limits of make / break capacity & rated voltage)

30 A for 200 ms, dc resistive, 10,000 operations (subject to the above limits of make / break capacity & rated voltage)
10 A (*), dc inductive, 10,000 operations (subject to the above limits of make / break capacity & rated voltage)

*Typical for repetitive shots – 2 minutes idle for thermal dissipation

Voltage	Current	L/R	No of shots in 1 sec
65 V	10 A	40 ms	5
150 V	10 A	40 ms	4
250 V	10 A	40 ms	2
250 V	10 A	20 ms	4

MOV protection: Max Voltage 330 V dc

Durability:
Loaded contact: 10 000 operations minimum,
Unloaded contact: 100 000 operations minimum.

Operate Time:
Less than 0.2 ms
Reset Time:
Less than 8 ms

Watchdog contacts
Non-programmable contacts for relay healthy/relay fail indication:
Breaking capacity:
DC: 30 W resistive
DC: 15 W inductive (L/R = 40 ms)
AC: 375 VA inductive (cos ϕ = 0.7)

IRIG-B 12X interface (modulated)
External clock synchronization per IRIG standard 200-98, format B12X.
Input impedance 6 kΩ at 1000 Hz
Modulation ratio: 3:1 to 6:1
Input signal, peak-peak: 200 mV to 20 V

IRIG-B 00X interface (un-modulated)
External clock synchronization per IRIG standard 200-98, format B00X.
Input signal TTL level
Input impedance at dc 10 kΩ

TD

TD

Environmental conditions

Ambient temperature range
Per IEC 60255-6: 1988
Operating temperature range:
-25°C to +55°C (or -13°F to +131°F).
Storage and transit:
-25°C to +70°C (or -13°F to +158°F).

Ambient humidity range
Per IEC 60068-2-3: 1969:
56 days at 93% relative humidity and +40°C
Per IEC 60068-2-30: 1980:
Damp heat cyclic, six (12 + 12) hour cycles, 93% RH, +25 to +55°C

Corrosive environments
Per IEC 60068-2-60: 1995, Part 2, Test Ke, Method (class) 3
Industrial corrosive environment/poor environmental control, mixed gas flow test.
21 days at 75% relative humidity and +30oC exposure to elevated concentrations of H2S, NO2, Cl2 and SO2.

Type tests

Insulation
Per IEC 60255-27: 2005
Insulation resistance > 100 MΩ at 500 Vdc (Using only electronic/brushless insulation tester).

Creepage distances and clearances
Per IEC 60255-27: 2005,
Pollution degree 3,
Overvoltage category III,
Impulse test voltage 5 kV.

High voltage (dielectric) withstand
EIA(RS)232 ports excepted.
(i) Per IEC 60255-27: 2005, 2 kV rms AC, 1 minute:
Between all case terminals connected together, and the case earth.
Also, between all terminals of independent circuits.
1 kV rms AC for 1 minute, across open watchdog contacts.
1 kV rms AC for 1 minute, across open contacts of changeover output relays.
(ii) Per ANSI/IEEE C37.90-1989 (reaffirmed 1994):
1.5 kV rms AC for 1 minute, across open contacts of changeover output relays.

Impulse voltage withstand test
Per IEC 60255-27: 2005
Front time: 1.2 µs, Time to half-value: 50 µs,
Peak value: 5 kV, 0.5J
Between all terminals, and all terminals and case earth.

Electromagnetic compatibility (EMC)

1 MHz burst high frequency disturbance test
Per IEC 60255-22-1: 1988, Class III,
Common-mode test voltage: 2.5 kV,
Differential test voltage: 1.0 kV,
Test duration: 2 s, Source impedance: 200 Ω
EIA(RS)232 ports excepted.

100kHz damped oscillatory test
Per EN61000-4-18: 2006 Level 3
2.5 kV peak between independent circuits and case earth.
1.0 kV peak across terminal of the same circuit.

Immunity to electrostatic discharge
Per IEC 60255-22-2: 1996, Class 4,
15 kV discharge in air to user interface, display, and exposed metalwork.
Per IEC 60255-22-2: 1996, Class 3,
8 kV discharge in air to all communication ports.
6 kV point contact discharge to any part of the front of the product.

Electrical fast transient or burst requirements
Per IEC 60255-22-4: 2002. Test severity Class III and IV:
Amplitude: 2 kV, burst frequency 5 kHz (Class III),
Amplitude: 4 kV, burst frequency 2.5 kHz (Class IV).
Applied directly to auxiliary supply, and applied to all other inputs. EIA(RS)232 ports excepted.

Surge withstand capability
IEEE/ANSI C37.90.1: 2002:
4 kV fast transient and 2.5kV oscillatory applied common mode and differential mode to opto inputs (filtered), output relays, CTs, VTs, power supply, field voltage.
4 kV fast transient and 2.5 kV oscillatory applied common mode to communications, IRIG-B.

Surge immunity test
EIA(RS)232 ports excepted.
Per IEC 61000-4-5: 2002 Level 4,
Time to half-value: 1.2/50 µs,
Amplitude: 4 kV between all groups and case earth,
Amplitude: 2 kV between terminals of each group.

Immunity to radiated electromagnetic energy
Per IEC 60255-22-3: 2000, Class III:
Test field strength, frequency band 80 to 1000 MHz:
10 V/m,
Test using AM: 1 kHz / 80%,
Spot tests at 80, 160, 450, 900 MHz
Per IEEE/ANSI C37.90.2: 1995:
25 MHz to 1000 MHz, zero and 100% square wave modulated.
Field strength of 35 V/m.

Radiated immunity from digital communications
Per EN61000-4-3: 2002, Level 4:
Test field strength, frequency band 800 to 960 MHz, and 1.4 to 2.0 GHz:
30 V/m,
Test using AM: 1 kHz / 80%.

Radiated immunity from digital radio telephones
Per ENV 50204: 1995
10 V/m, 900MHz and 1.89 GHz.

Immunity to conducted disturbances induced by radio frequency fields
Per IEC 61000-4-6: 1996, Level 3,
Disturbing test voltage: 10 V

Power frequency magnetic field immunity
Per IEC 61000-4-8: 1994, Level 5,
100 A/m applied continuously,
1000 A/m applied for 3 s.
Per IEC 61000-4-9: 1993, Level 5,
1000 A/m applied in all planes.
Per IEC 61000-4-10: 1993, Level 5,
100 A/m applied in all planes at 100 kHz/1 MHz with a burst duration of 2 s.

Conducted emissions
Per EN 55022: 1998:
0.15 - 0.5 MHz, 79 dBµV (quasi peak)
66 dBµV (average)
0.5 - 30 MHz, 73 dBµV (quasi peak)
60 dBµV (average).

Radiated emissions
Per EN 55022: 1998:
30 - 230 MHz, 40 dBµV/m at 10 m measurement distance
230 - 1 GHz, 47 dBµV/m at 10 m measurement distance.

EU directives

EMC Compliance
Per 2004/108/EC:
Compliance to the European Commission Directive on EMC is demonstrated using a Technical File. Product Specific Standards were used to establish conformity:
EN50263: 2000

Product safety
Per 2006/95/EC:
Compliance to the European Commission Low Voltage Directive.
(LVD) is demonstrated using a Technical File.
A product specific standard was used to establish conformity.
EN 60255-27: 2005

R&TTE compliance
Radio and Telecommunications Terminal Equipment (R & TTE) directive 99/5/EC.
Compliance demonstrated by compliance to both the EMC directive and the Low voltage directive, down to zero volts.
Applicable to rear communications ports.

CE 2004/108/EC

TD

Mechanical robustness

Vibration test
Per IEC 60255-21-1: 1996
Response Class 2
Endurance Class 2

Shock and Bump
Per IEC 60255-21-2: 1995
Shock response Class 2
Shock withstand Class 1
Bump Class 1

TD

Seismic test
Per IEC 60255-21-3: 1995
Class 2

Px40 third party compliances

Underwriters laboratory (UL)

File Number: E202519
Original Issue
(Complies with Canadian and US requirements).

Energy Networks Association (ENA)

Certificate Number: 116 Issue 2
Assessment Date: 18-04-2007

Protection functions

Phase current differential protection

Accuracy
Pick-up: Formula ±10%
Drop-off: 0.75 x Formula ±10%
IDMT characteristic shape: ±5% or
40 ms whichever is greater
DT operation: ±2% or 20 ms whichever
is greater
Instantaneous Operation: <30 ms
Reset time: <60 ms
Repeatability: ±2.5%
Characteristic:
UK curves IEC 60255-3 – 1998
US curves IEEE C37.112 – 1996
Vector compensation:
No affect on accuracy
Current transformer ratio
Compensation
No affect on accuracy
High set characteristic setting:
No affect on accuracy
Two ended scheme operation:
No affect on accuracy
Three ended scheme operation:
No affect on accuracy

Distance protection

All quoted operating times include the closure of the trip output contact.

The following tripping characteristics, show Operating time Versus reach percentage, for faults close to line angle

50 Hz operation

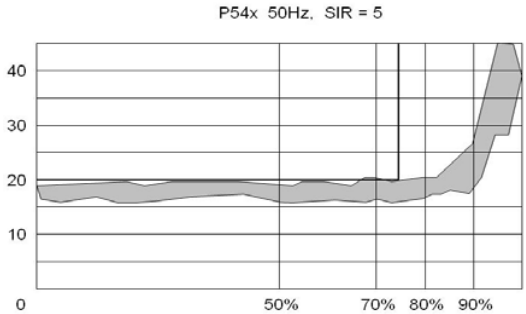

60 Hz operation

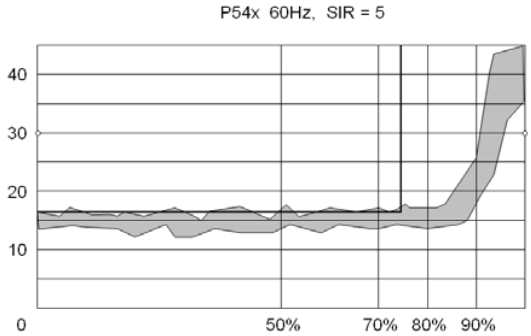

Accuracy
Characteristic shape, up to SIR = 30:
±5% for on-angle fault (the set line angle)
±10% off-angle
(Example: For a 70 degree set line angle, injection testing at 40 degrees would be referred to as "off-angle").
Zone time delay deviations:
±20 ms or 2%, whichever is greater.

Sensitivity
Settings < 5/In Ω: (0.05In*5/(setting*In)) ±5%
Settings > 5/In Ω: 0.05 In ±5%

Out of step

Accuracy of zones and timers as per distance
Operating range: up to 7 Hz

Phase and ground (earth) overcurrent

Accuracy
Pick-up: Setting ±5%
Drop-off: 0.95 x setting ±5%
Minimum trip level for IDMT elements:
1.05 x Setting ± 5%
Inverse time stages:
±40 ms or 5%, whichever is greater
Definite time stages:
±40 ms or 2%, whichever is greater
Repeatability: 5%
Directional boundary accuracy:
±2° with hysteresis <3°
Additional tolerance due to increasing X/R ratios:
±5% over the X/R ratio from 1 to 90.
Overshoot of overcurrent elements: <30 ms

SEF
Pick-up: Setting ±5%
Drop-off: 0.95 x Setting ±5%
Minimum trip level of IDMT elements:
1.05 x Setting ±5%
IDMT characteristic shape:
±5% or 40ms whichever is greater*

TD

TD

IEEE reset: ±17.5% or 60 ms
whichever is greater
DT operation: ±2% or 50 ms
whichever is greater
DT reset: ±5% or 50 ms whichever is
greater
Repeatability: 5%
* Reference conditions TMS = 1, TD = 1, and IN> setting of 100 mA, accuracy operating range 2-20 Is

Wattmetric SEF
Pick-up P=0W: ISEF> ±5% or 5 mA
Pick-up P>0W: P> ±5%
Drop-off P=0W: (0.95 x ISEF >) ±5% or 5 mA
Drop-off P>0W: 0.9 x P> ±5%
Boundary accuracy: ±5% with 1° hysteresis
Repeatability: 1%

Polarizing quantities
VN> and V2> Level detectors:
Pick-up: ±10%
Resetting ratio: 0.9
I2> Level detector:
Pick-up: ±10%
Resetting ratio: 0.9

Negative sequence overcurrent

Accuracy
Pick-up: Setting ±5%
Drop-off: 0.95 x setting
Definite time operation:
±60 ms or 2%, whichever is greater
Repeatability: 1%
Directional boundary accuracy:
±2° with hysteresis <1°
Reset: <35 ms

Undervoltage

Accuracy
DT Pick-up: Setting ±2%
IDMT Pick-up: 0.98 x setting ±2%
Drop-off: 1.02 x setting ±2%
Definite time operation:
±40 ms or 2%, whichever is greater
Repeatability: 1%
IDMT characteristic shape:
±40 ms or 2%, whichever is greater
Reset: <75 ms

Overvoltage

Accuracy
DT Pick-up: Setting ±1%
IDMT Pick-up: 1.02 x setting ±2%
Drop-off: 0.98 x setting ±2%
Definite time operation:
±40 ms or 2%, whichever is greater
Repeatability: 1%
IDMT characteristic shape:
±40 ms or 2%, whichever is greater
Reset: <75 ms

Neutral displacement/residual overvoltage

Accuracy
DT Pick-up: Setting ±5%
IDMT Pick-up: 1.05 x setting ±5%
Drop-off: 0.95 x setting ±5%
Definite time operation:
±20 ms or 2%, whichever is greater
Instantaneous operation: <50 ms
Repeatability: 10%
IDMT characteristic shape:
±60 ms or 5%, whichever is greater
Reset: <35 ms

Circuit breaker fail and undercurrent

Accuracy
Pick-up: ±10% or 0.025 In, whichever is greater
Operating time: <12 ms
Timers: ±2 ms or 2%, whichever is greater
Reset: <15 ms

Broken conductor logic

Accuracy
Pick-up: Setting ±2.5%
Drop-off: 0.95 x setting ±2.5%
Definite time operation:
±50 ms or 2%, whichever is greater
Reset: <25 ms

Thermal overload

Accuracy
Thermal alarm pick-up:
Calculated trip time ±10%
Thermal overload pick-up:
Calculated trip time ±10%
Cooling time accuracy ±15% of theoretical
Repeatability: <5%
* *Operating time measured with applied current of 20% above thermal setting.*

Voltage transformer supervision

Accuracy
Fast block operation: <1 cycle
Fast block reset: <1.5 cycles
Time delay:
±20 ms or 2%, whichever is greater

Current transformer supervision

Standard CTS

Accuracy
IN> Pick-up: Setting ±5%
VN< Pick-up: Setting ±5%
IN> Drop-off: 0.9 setting ±5%
VN< Drop-off:
(1.05 x setting) ±5% or 1 V, whichever is greater
Time delay operation:
Setting ±2% or 20 ms, whichever is greater
CTS block operation: <1 cycle
CTS reset: <35 ms

Differential CTS

Accuracy
I1 Pick-up: Setting 5%
I1 Drop-off: (0.9 x setting) 5%
I2/I1> Pick-up: Setting 5%
I2/I1> Drop-off: (0.9 x setting) 5%
I2/I1>> Pick-up: Setting 5%
I2/I1>> Drop-off: (0.9 x setting) 5%
Time delay operation:
Setting 2% or 20 ms, whichever is greater
CTS block operation: <1 cycle
CTS block diff operation <1 cycle
CTS reset: <35 ms

CB state monitoring and condition monitoring

Accuracy
Timers:
±20 ms or 2%, whichever is greater
Broken current accuracy: ±5%

Programmable scheme logic

Accuracy
Output conditioner timer:
Setting ±20 ms or 2%, whichever is greater

Dwell conditioner timer:
Setting ±20 ms or 2%, whichever is greater
Pulse conditioner timer:
Setting ±20 ms or 2%, whichever is greater

Auto-reclose and check synchronism

Accuracy
Timers:
Setting ±20 ms or 2%, whichever is greater

Measurements and recording facilities

Accuracy
Typically ±1%, but ±0.5% between 0.2 - 2In/Vn
Current: 0.05 to 3 In
Accuracy: ±1.0% of reading
Voltage: 0.05 to 2 Vn
Accuracy: ±1.0% of reading
Power (W): 0.2 to 2 Vn and 0.05 to 3 In
Accuracy: ±5.0% of reading at unity power factor
Reactive power (Vars): 0.2 to 2 Vn to 3 In
Accuracy: ±5.0% of reading at zero power factor
Apparent power (VA): 0.2 to 2Vn 0.05 to 3 In
Accuracy: ±5.0% of reading
Energy (Wh): 0.2 to 2Vn 0.2 to 3 In
Accuracy: ±5.0% of reading at zero power factor
Energy (Varh): 0.2 to 2Vn 0.2 to 3In
Accuracy: ±5.0% of reading at zero power factor
Phase accuracy: 0° to 360°
Accuracy: ±0.5%
Frequency: 45 to 65 Hz
Accuracy: ±0.025 Hz

IRIG-B and real time clock

Performance accuracy
(for modulated and un-modulated versions)
Real time clock accuracy: < ±2 seconds/day

Disturbance records

Maximum record duration : 50 seconds
No of records : minimum 5 at 10 second each,maximum 50 at 1 second each
(8 records of 3 seconds each via IEC 60870-5-103 protocol)

Accuracy
Magnitude and relative phases:
±5% of applied quantities
Duration: ±2%
Trigger position: ±2% (minimum Trigger 100 ms)

TD

TD

Fault locator

Accuracy
Fault location: ±2% of line length (under reference conditions)*
* Reference conditions solid fault applied on line

Event, fault & maintenance records

The most recent records are stored in battery-backed memory, and can be extracted via the communication port or be viewed on the front panel display.

No of Event Records: Up to 512 time tagged event records.

No of Fault Records: Up to 15

No of Maintenance Records: Up to 10

Plant supervision

Accuracy
Timers: ±2% or 20ms whichever is greater
Broken current accuracy: ±5%

Timer accuracy
Timers: ±2% or 40ms whichever is greater
Reset time: <30 ms

Undercurrent accuracy
Pick-up: ±10% or 25 mA whichever is greater
Operating time: <20 ms
Reset: <25 ms

InterMiCOM^{64} fiber optic teleprotection

End-end operation. Table below shows minimum and maximum transfer time for InterMiCOM^{64} (IM64).

The times are measured from opto initialization (with no opto filtering) to relay standard output and include a small propagation delay for back-back test (2.7 ms for 64 kbits/s and 3.2 ms for 56 kbits/s).

IDiff IM64 indicates InterMiCOM^{64} signals working in conjunction with the differential protection fiber optic communications channel. IM64 indicates InterMiCOM^{64} signals working as a standalone feature.

Configuration	Permissive op times (ms)	Direct op times (ms)
IM64 at 64 k	13 - 18	17 - 20
IM64 at 56 k	15 - 20	19 - 22
IDiff IM64 at 64 k	22 - 24	23 - 25
IDiff IM64 at 56 k	24 - 26	25 - 27

Ethernet data (where applicable)

100 Base FX Interface

Transmitter Optical Characteristics
(TA = 0°C to 70°C, VCC = 4.75 V to 5.25 V)

Parameter	Sym	Min.	Typ.	Max.	Unit
Output Optical Power BOL 62.5/125 µm, NA = 0.275 Fiber EOL	PO	-19 -20	-16.8	-14	dBm avg.
Output Optical Power BOL 50/125 µm, NA = 0.20 Fiber EOL	PO	-22.5 -23.5	-20.3	-14	dBm avg.
Optical Extinction Ratio				10 -10	% dB
Output Optical Power at Logic "0" State	PO ("0")			-45	dBm avg.

BOL - Beginning of life

EOL - End of life

Receiver Optical Characteristics
(T_A = 0°C to 70°C, V_{CC} = 4.75 V to 5.25 V)

Parameter	Sym	Min.	Typ.	Max.	Unit
Input Optical Power Minimum at Window Edge	PIN Min. (W)		-33.5	–31	dBm avg.
Input Optical Power Minimum at Eye Center	PIN Min. (C)		-34.5	-31.8	Bm avg.
Input Optical Power Maximum	PIN Max.	-14	-11.8		dBm avg.

Settings, measurements and records list

Settings list

Global settings (system data):

Language: English/French/German/Spanish
English/French/German/Russian
Chinese/English/French
Frequency: 50/60 Hz

Circuit breaker control (CB control):

CB Control by:
- Disabled
- Local
- Remote
- Local+remote
- Opto
- Opto+local
- Opto+remote
- Opto+rem+local

P543 and P545 specific CB control settings:

Close pulse time: 0.10…10.00 s
Trip pulse time: 0.10…5.00 s
Man close t max: 0.01…9999.00 s
Man close delay: 0.01…600.00 s
CB healthy time: 0.01…9999.00 s
Check sync time: 0.01…9999.00 s
Reset lockout by: User interface/CB close
Man close RstDly: 0.10…600.00 s
Single pole A/R: Disabled/Enabled
Three pole A/R: Disabled/Enabled
CB Status Input:
- None
- 52A 3 pole
- 52B 3 pole
- 52A & 52B 3 pole
- 52A 1 pole
- 52B 1 pole
- 52A & 52B 1 pole

P544 and P546 specific CB control settings:

Man Close Delay: 0.01…600 s
CB Healthy Time: 0.01…9999 s
Check Sync. Time: 0.01…9999 s
Rst CB mon LO By: User Interface, CB Close
CB mon LO RstDly: 0.1…600 s
CB1 Status Input: None, 52A 3 pole, 52B 3 pole, 52A & 52B 3 pole, 52A 1 pole, 52B 1 pole, 52A & 52B 1 pole
CB Status Time 0.1 ... 5 s
CB2 Status Input: None, 52A 3 pole, 52B 3 pole, 52A & 52B 3 pole, 52A 1 pole, 52B 1 pole, 52A & 52B 1 pole
Res AROK by UI: Enabled/Disabled
Res AROK by NoAR: Enabled/Disabled
Res AROK by Ext: Enabled/Disabled
Res AROK by TDly: Enabled/Disabled
Res AROK by TDly: 1.0…9999 s
Res LO by CB IS: Enabled/Disabled
Res LO by UI: Enabled/Disabled
Res LO by NoAR: Enabled/Disabled
Res LO by ExtDDB: Enabled/Disabled
Res LO by TDelay: Enabled/Disabled
LO Reset Time: 1…9999 s

Date and time

IRIG-B Sync: Disabled/Enabled
Battery Alarm: Disabled/Enabled

LocalTime Enable: Disabled/Fixed/Flexible
LocalTime Offset: -720...720
DST Enable: Disabled or Enabled
DST Offset: 30...60
DST Start: First, Second, Third, Fourth, Last
DST Start Day: Monday, Tuesday, Wednesday, Thursday, Friday, Saturday
DST Start Month: January, February, March, April, May, June, July, August, September, October, November, December
DST Start Mins: 0...1425
DST End: First, Second, Third, Fourth, Last
DST End Day: Monday, Tuesday, Wednesday, Thursday, Friday, Saturday
DST End Month: January, February, March, April, May, June, July, August, September, October, November, December
DST End Mins: 0...1425
RP1 Time Zone: UTC or Local
RP2 Time Zone: UTC or Local
DNPOE Time Zone: UTC or Local
Tunnel Time Zone: UTC or Local

Configuration

Setting Group:
- Select via Menu
- Select via Opto

Active Settings: Group 1/2/3/4
Setting Group 1: Disabled/Enabled
Setting Group 2: Disabled/Enabled
Setting Group 3: Disabled/Enabled
Setting Group 4: Disabled/Enabled
Distance: Disabled/Enabled
Directional E/F: Disabled/Enabled

TD

TD

Phase Diff: Disabled/Enabled
Overcurrent: Disabled/Enabled
Neg Sequence O/C: Disabled/Enabled
Broken Conductor: Disabled/Enabled
Earth Fault: Disabled/Enabled
Sensitive E/F: Disabled/Enabled
Residual O/V NVD: Disabled/Enabled
Thermal Overload: Disabled/Enabled
Power Swing Block: Disabled/Enabled
Volt Protection: Disabled/Enabled
Freq Protection: Disabled/Enabled
df/dt Protection: Disabled/Enabled
CB Fail: Disabled/Enabled
Supervision: Disabled/Enabled
System Checks: Disabled/Enabled
Auto-Reclose: Disabled/Enabled
Input Labels: Invisible/Visible
Output Labels: Invisible/Visible
CT & VT Ratios: Invisible/Visible
Record Control: Invisible/Visible
Disturb Recorder: Invisible/Visible
Measure't Setup: Invisible/Visible
Comms Settings: Invisible/Visible
Commission Tests: Invisible/Visible
Setting Values: Primary/Secondary
Control Inputs: Invisible/Visible
Ctrl I/P Config: Invisible/Visible
Ctrl I/P Labels: Invisible/Visible
Direct Access: Disabled/Enabled
InterMiCOM^{64} Fiber: Disabled/Enabled
Function Key: Invisible/Visible
LCD Contrast: *(Factory pre-set)*

CT and VT ratios

P543 and P545 CT and VT ratio settings:
Main VT Primary: 100 V...1 MV
Main VT Sec'y: 80...140 V
C/S VT Primary: 100 V...1 MV
C/S VT Secondary: 80...140 V
Phase CT Primary: 1 A…30 kA
Phase CT Sec'y: 1 A/5 A
SEF CT Primary: 1 A…30 kA
SEF CT Sec'y: 1 A/5 A
MComp CT Primary: 1 A…30 kA
MComp CT Sec'y: 1 A/5 A
C/S Input:
A-N
B-N
C-N
A-B
B-C
C-A
A-N/1.732
B-N/1.732
C-N/1.732

Main VT Location: Line/Bus
CT Polarity: Standard /Inverted
CT2 Polarity: Standard /Inverted
SEF CT Polarity: Standard /Inverted
M CT Polarity: Standard /Inverted
VTs Connected: Yes/No

P544 and P546 CT and VT ratio settings :
Main VT Primary: 100 V…1000 kV
Main VT Sec'y: 80…140 V
CB1 CS VT Prim'y: 100 V…1000 kV
CB1 CS VT Sec'y: 80…140 V
CB2 CS VT Prim'y: 100 V…1000 kV
CB2 CS VT Sec'y: 80…140 V
Phase CT Primary: 1A…30 kA
Phase CT Sec'y: 1…5 A
SEF CT Primary: 1 A…30 kA
SEF CT Secondary: 1…5 A
MComp CT Primary: 1…30 k
MComp CT Sec'y: 1…5 A
CS Input: A-N, B-N, C-N, A-B, B-C, C-A
CT1 Polarity: Standard/Inverted
CT2 Polarity: Standard/Inverted
SEF CT Polarity: Standard/Inverted
M CT Polarity: Standard/Inverted
VTs Connected: Yes/No
CB1 CS VT PhShft: -180…+180 deg
CB1 CS VT Mag.: 0.2…3
CB2 CS VT PhShft: -180…+180 deg
CB2 CS VT Mag.: 0.2…3

Sequence of event recorder (record control)

Alarm Event: Disabled/Enabled
Relay O/P Event: Disabled/Enabled
Opto Input Event: Disabled/Enabled
General Event: Disabled/Enabled
Fault Rec Event: Disabled/Enabled
Maint Rec Event: Disabled/Enabled
Protection Event: Disabled/Enabled
Flt Rec Extended: Disabled/Enabled
DDB 31 - 0:
(up to):
DDB 1791 - 1760:
Binary function link strings, selecting which DDB signals will be stored as events, and which will be filtered out.

Oscillography (disturb recorder)

Duration: 0.10…10.50 s
Trigger Position: 0.0…100.0%
Trigger Mode: Single/Extended
Analog Channel 1:
(up to):
Analog Channel 12:
Disturbance channels selected from:
IA, IB, IC, IN, IN Sensitive, VA, VB, VC, IM, V CheckSync (only for P543 and P545) and IA2, IB2, IC2 and VCheckSync2 (only for P544 and P546)

Digital Input 1:
(up to):
Digital Input 32:
Selected binary channel assignment from any DDB status point within the relay (opto input, output contact, alarms, starts, trips, controls, logic…).

Input 1 Trigger: No Trigger/Trigger
(up to):
Input 32 Trigger: No Trigger/Trigger

Measured operating data (measure't setup)

Default Display:
- 3Ph + N Current
- 3Ph Voltage
- Power
- Date and Time
- Description
- Plant Reference
- Frequency

Access Level
Local Values: Primary/Secondary
Remote Values: Primary/Secondary
Measurement Ref: VA/VB/VC/IA/IB/IC
Measurement Mode: 0/1/2/3
Fix Dem Period: 1…99 mins
Roll Sub Period: 1…99 mins
Num Sub Periods: 1…15
Distance Unit: Miles/Kilometers
Fault Location:
- Distance
- Ohms
- % of Line

Remote 2 Values: Primary/Secondary

Communications

RP1 Protocol:
- Courier
- IEC870-5-103
- DNP3.0
- IEC 61850

Courier protocol :
RP1 Address*:* 0…255
RP1 InactivTimer: 1…30 mins
RP1 PhysicalLink:
- Copper
- Fiber Optic

RP1 Port Config:
- K Bus
- EIA485 (RS485)

RP1 Comms Mode:
- IEC 60870 FT1.2 Frame
- IEC 60870 10-Bit Frame

RP1 Baud Rate:
- 9600 bits/s
- 19200 bits/s
- 38400 bits/s

IEC870-5-103 protocol :
RP1 Address*:* 0…255
RP1 InactivTimer: 1…30 mins
RP1 Baud Rate:
- 9600 bits/s
- 19200 bits/s

RP1 Meas Period: 1…60 s
RP1 PhysicalLink:
- Copper
- Fiber Optic

RP1 CS103 Blocking:
- Disabled
- Monitor Blocking
- Command Blocking

DNP3.0 protocol : (EIA485)
RP1 Address*:* 0…65519
RP1 Baud Rate:
- 1200 bits/s
- 2400 bits/s
- 4800 bits/s
- 9600 bits/s
- 19200 bits/s
- 38400 bits/s

RP1 Parity: Odd/Even/None
RP1 PhysicalLink: Copper
Fiber Optic
RP1 Time Sync: Disabled/Enabled
Meas Scaling: Primary, Secondary or Normalized.
Message gap: 0…50 ms
DNP Need time: 1...30 mins
DNP App Fragment: 100...2048
DNP App Timeout: 1...120 s
DNP SBO Timeout: 1...10 s
DNP Link Timeout: 0.1...60 s

DNP3.0 protocol : (Ethernet)
DNP Time Sync: Disabled/Enabled
Meas Scaling: Primary, Secondary or Normalized.
NIC Tunl Timeout: 1...30 mins
NIC Link Report: Alarm, Event, None
NIC Link Timeout: 0.1...60 s
DNP Need time: 1...30 mins
DNP App Fragment: 100...2048
DNP App Timeout: 1...120 s
DNP SBO Timeout: 1...10 s
DNP Link Timeout: 0.1...60 s

IEC61850 protocol : (Ethernet)
NIC Tunl Timeout: 1...30mins
NIC Link Report: Alarm, Event, None
NIC Link Timeout: 0.1...60s

Optional additional second rear communication (rear port2 (RP2))

RP2 Protocol: Courier (fixed)
RP2 Port Config:
- Courier over EIA(RS)232
- Courier over EIA(RS)485
- K-Bus

RP2 Comms. Mode:
- IEC60870 FT1.2 Frame
- 10-Bit NoParity

RP2 Address: 0…255
RP2 InactivTimer: 1…30 mins
RP2 Baud Rate:
- 9600 bits/s
- 19200 bits/s
- 38400 bits/s

TD

TD

Commission tests

Monitor Bit 1:
(up to):
Monitor Bit 8:
Binary function link strings, selecting which DDB signals have their status visible in the Commissioning menu, for test purposes
Test Mode:
Disabled
Test Mode
Blocked Contacts
Test Pattern:
Configuration of which output contacts are to be energized when the contact test is applied.

Contact Test:	No Operation, Apply Test, Remove Test
Test LEDs:	No Operation Apply Test
Test Auto-reclose:	No Operation Trip 3 Pole Trip Pole A Trip Pole B Trip Pole C
Static Test Mode:	Disabled/Enabled
Static Test:	Disabled/Enabled
Loopback Mode:	Disabled/Internal/External

IM64 TestPattern:
Configuration of which InterMiCOM^{64} commands are to be set high or low for a loopback test.
IM^{64} Test Mode: Disabled/Enabled

Circuit breaker condition monitoring (CB Monitor setup)

P543and P545 CB monitor setup :
Broken I^: 1.0…2.0
I^ Maintenance: Alarm Disabled/Enabled
I^ Maintenance: 1…25000
I^ Lockout: Alarm Disabled/Enabled
I^ Lockout: 1…25000
No. CB Ops Maint: Alarm Disabled/Enabled
No. CB Ops Maint: 1…10000
No. CB Ops Lock: Alarm Disabled/Enabled
No. CB Ops Lock: 1…10000
CB Time Maint: Alarm Disabled/Enabled
CB Time Maint: 0.005…0.500s
CB Time Lockout: Alarm Disabled/Enabled
CB Time Lockout: 0.005…0.500s
Fault Freq. Lock: Alarm Disabled/Enabled
Fault Freq. Count: 1…9999
Fault Freq. Time: 0…9999s

P544 and P546 CB monitor setup :

CB1 Broken I^:	1…2
CB1 I^ Maintenance:	Alarm Disabled/ Alarm Enabled
CB1 I^ Maintenance:	1…25000 In^
CB1 I^ Lockout:	Alarm Disabled/ Alarm Enabled
CB1 I^ Lockout:	1…25000 In^
No. CB1 Ops. Maint.:	Alarm Disabled/ Alarm Enabled
No. CB1 Ops. Maint.:	1…10000
No. CB1 Ops. Lock:	Alarm Disabled/ Alarm Enabled
No. CB1 Ops. Lock:	1…10000
CB1 Time Maint.:	Alarm Disabled/ Alarm Enabled
CB1 Time Maint.:	0.005…0.5 s
CB1 Time Lockout:	Alarm Disabled/ Alarm Enabled
CB1 Time Lockout:	0.005…0.5 s
CB1 Fault Freq. Lock:	Alarm Disabled/ Alarm Enabled
CB1 Flt Freq. Count:	1…9999
CB1 Flt Freq. Time:	0…9999 s

CB2 Broken I^:
(up to)
CB2 Flt Freq. Time:
All settings selected from the same ranges as per the first controlled circuit breaker, CB1.

Optocoupled binary inputs (opto config.)

Global threshold:
24 - 27 V
30 - 34 V
48 - 54 V
110 - 125 V
220 - 250 V
Custom
Opto Input 1:
(up to):
Opto Input #. *(# = max. opto no. fitted):*
Custom options allow independent thresholds to be set per opto, from the same range as above.
Filter Control:
Binary function link string, selecting which optos will have an extra 1/2 cycle noise filter, and which will not.
Characteristics:
Standard 60% - 80%
50% - 70%

Control inputs into PSL (ctrl. I/P config.)

Hotkey Enabled:
Binary function link string, selecting which of the control inputs will be driven from Hotkeys.
Control Input 1: Latched/Pulsed
(up to):

Control Input 32: Latched/Pulsed
Ctrl Command 1:
(up to):
Ctrl Command 32:
ON/OFF
SET/RESET
IN/OUT
ENABLED/DISABLED

Function keys

Fn. Key Status 1:
(up to):
Fn. Key Status 10
Disable
Lock
Unlock/Enable
Fn. Key 1 Mode: Toggled/Normal
(up to):
Fn. Key 10 Mode: Toggled/Normal
Fn. Key 1 Label:
(up to):
Fn. Key 10 Label:
User defined text string to describe the function of the particular function key

IED configurator

Switch Conf. Bank: No Action/Switch Banks

IEC 61850 GOOSE

GoEna: Disabled/Enabled
Test Mode: Disabled/Pass Through/Forced
VOP Test Pattern: 0x00000000...
0xFFFFFFFF
Ignore Test Flag: No/Yes

Prot comms/IM[64]

Scheme Setup:2 Terminal/Dual Redundant/3 Terminal
Address: 0-0, 1-A…20-A, 1-B….20-B
Address: 0-0, 1-A…20-A, 1-B….20-B, 1-C…20-C
Comm Mode: Standard/IEEE C37.94
Baud Rate Ch 1: 56kbits/s or 64kbits/s
Baud Rate Ch 2: 56kbits/s or 64kbits/s
Clock Source Ch1: Internal/External
Clock Source Ch2: Internal/External
Ch1 N*64kbits/s: Auto, 1, 2, 3... 12
Ch2 N*64kbits/s: Auto, 1, 2, 3... 12
Comm Delay Tol: 0.001 s...0.00005 s
Comm Fail Timer: 0.1 s...600 s
Comm Fail Mode: Ch 1 Failure/Ch 2 Failure/ Ch 1 or Ch 2 Fail/Ch 1 and Ch 2 Fail
GPS Sync: Enabled or Disabled
Char Mod Time: 0...2 s
Prop Delay Equal: No operation/Restore CDiff
Re-Configuration: Three Ended/Two Ended (R1&R2)/Two Ended (L&R2)/Two Ended (L&R1)
Channel Timeout: 0.1 s...10 s
Alarm Level: 0%...100%
Prop Delay Stats: Disabled/Enabled
MaxCh 1 PropDelay: 1 m...50 ms
MaxCh 2 PropDelay: 1 m...50 ms
TxRx Delay Stats: Disabled/Enabled
MaxCh1 Tx-RxTime: 1 m...50 ms
MaxCh2 Tx-RxTime: 1 m...50 ms
GPS Fail Timer: 0…9999 s
GPS Trans Fail: Disabled/Enabled
GPS Trans Count: 1…100 s
GPS Trans Timer: 0…9999 s
IM1 Cmd Type: Direct/Permissive
IM1 FallBackMode: Default/Latching
IMx(x=1 to 8) DefaultValue: 0 or 1
The IM1 – IM8 s setting are common to both Ch1 and Ch2 (i.e. if IM1 DefaultValue is set to 0, it will be 0 on Ch1 and on Ch2)

TD

Control input user labels (Ctrl. I/P labels)

Control Input 1:
(up to):
Control Input 32:
User defined text string to describe the function of the particular control input

Settings in multiple groups

Note: *All settings here onwards apply for setting groups # = 1 to 4.*

Protection functions

Line parameters

GROUP # (for # = 1 to 4)
Line Length (km): 0.30…1000.00 km
Line Length (miles): 0.20…625.00 mi
Line Impedance: 0.05…500.00/In Ω
Line Angle: 20…90°
Residual Comp: 0.00…10.00
Residual Angle: -180…90°
Mutual Comp: Disabled/Enabled
KZm Mutual Set: 0.00…10.00
KZm Mutual Angle: -180…90°
Mutual cut-off (k): 0.0…2.0
Phase Sequence:
Standard ABC
Reverse ACB
CB Tripping Mode (per CB as appropriate):
3 Pole
1 and 3 Pole
Line Charging Y: 0.00…10.00 ms

Distance setup

Setting Mode: Simple/Advanced

TD

Phase distance

Phase Chars.: Mho/Quadrilateral Quad
Resistance: Common/Proportional
Fault Resistance: 0.05…500.00/In Ω
Zone 1 Ph Status: Disabled/Enabled
Zone 1 Ph Reach: 10…1000% of line
Zone 2 Ph Status: Disabled/Enabled
Zone 2 Ph Reach: 10…1000% of line
Zone 3 Ph Status: Disabled/Enabled
Zone 3 Ph Reach: 10…1000% of line
Zone 3 Ph Offset: Disabled/Enabled
Z3Ph Rev Reach: 10…1000% of line
Zone P Ph Status: Disabled/Enabled
Zone P Ph Dir.: Forward/Reverse
Zone P Ph Reach: 10…1000% of line
Zone 4 Ph Status: Disabled/Enabled
Zone 4 Ph Reach: 10…1000% of line

Ground distance

Ground Chars.: Mho/Quadrilateral
Quad Resistance: Common/Proportional
Fault Resistance: 0.05…500.00/In Ω
Zone1 Gnd Status: Disabled/Enabled
Zone1 Gnd Reach: 10…1000% of line
Zone2 Gnd Status: Disabled/Enabled
Zone2 Gnd Reach: 10…1000% of line
Zone3 Gnd Status: Disabled/Enabled
Zone3 Gnd Reach: 10…1000% of line
Zone3 Gnd Offset: Disabled/Enabled
Z3Gnd Rev Reach: 10…1000% of line
ZoneP Gnd Status: Disabled/Enabled
ZoneP Gnd Direction: Forward/Reverse
ZoneP Gnd Reach: 10…1000% of line
Zone4 Gnd Status: Disabled/Enabled
Zone4 Gnd Reach: 10…1000% of line
Digital Filter:
  Standard
  Special Applics
CVT Filters:
  Disabled
  Passive
  Active
SIR Setting: *(for CVT)*: 5…60
Load Blinders: Disabled/Enabled
Load/B Impedance:
  0.10…500.00/In Ω
Load/B Angle: 15…65°
Load Blinder V<: 1.0…70.0 V (ph-g)
Distance Polarizing: 0.2…5.0
Delta Status: Disabled/Enabled
Delta Char Angle: 0°...90°
Delta V Fwd: 1.0…30.0 V
Delta V Rev: 0.5…30.0 V
Delta I Fwd: 0.10…10.00 In
Delta I Rev: 0.05…10.00 In

Distance elements - phase distance

Z1 Ph. Reach: 0.05…500.00/In Ω
Z1 Ph. Angle: 20…90°
R1 Ph. Resistive: 0.05…500.00/In Ω
Z1 Tilt Top Line: -30…30°
Z1 Ph. Sensit. Iph>1: 0.050…2.000 In
Z2 Ph. Reach: 0.05…500.00/In Ω
Z2 Ph. Angle: 20…90°
Z2 Ph Resistive: 0.05…500.00/In Ω
Z2 Tilt Top Line: -30…30°
Z2 Ph. Sensit. Iph>2: 0.050…2.000 In
Z3 Ph. Reach: 0.05…500.00/In Ω
Z3 Ph. Angle: 20…90°
Z3' Ph Rev Reach: 0.05…500.00/In Ω
R3 Ph Res. Fwd.: 0.05…500.00/In Ω
R3' Ph Res. Rev.: 0.05…500.00/In Ω
Z3 Tilt Top Line: -30…30°
Z3 Ph. Sensit. Iph>3: 0.050…2.000 In
ZP Ph. Reach: 0.05…500.00/In Ω
ZP Ph. Angle: 20…90°
ZP Ph Resistive: 0.05…500.00/In Ω
ZP Tilt Top line: -30…30°
ZP Ph. Sensit. Iph>P: 0.050…2.000In
Z4 Ph. Reach: 0.05…500.00/In Ω
Z4 Ph. Angle: 20…90°
Z4 Ph Resistive: 0.05…500.00/In Ω
Z4 Tilt Top line: -30…30°
Z4 Ph. Sensit. Iph>4: 0.050…2.000 In

Ground distance parameters

Z1 Gnd. Reach: 0.05…500.00/In Ω
Z1 Gnd. Angle: 20…90°
Z1 Dynamic Tilt: Disabled or Enabled
Z1 Tilt top line: -30°...30°
kZN1 Res. Comp.: 0.00…10.00
kZN1 Res. Angle: -180…90°
kZm1 Mut. Comp.: 0.00…10.00
kZm1 Mut. Angle: -180…90°
R1 Gnd. Resistive: 0.05…500.00/In Ω
Z1 Sensit Ignd>1: 0.050…2.000 In
Z2 Gnd. Reach: 0.05…500.00/In Ω
Z2 Gnd. Angle: 20…90°
Z2 Dynamic Tilt: Disabled or Enabled
Z2 Tilt top line: -30°...30°
kZN2 Res. Comp.: 0.00…10.00
kZN2 Res. Angle: -180…90°
kZm2 Mut. Comp: 0.00…10.00
kZm2 Mut. Angle: -180…90°
R2 Gnd Resistive: 0.05…500.00/In Ω
Z2 Sensit Ignd>2: 0.050…2.000 In
Z3 Gnd. Reach: 0.05…500.00/In Ω
Z3 Gnd. Angle: 20…90°
Z3 Dynamic Tilt: Disabled or Enabled
Z3 Tilt top line: -30°...30°
Z3' Gnd Rev Rch: 0.05…500.00/In Ω
kZN3 Res. Comp.: 0.00…10.00
kZN3 Res. Angle: -180…90°
kZm3 Mut. Comp.: 0.00…10.00
kZm3 Mut. Angle: -180…90°
R3 Gnd Res. Fwd: 0.05…500.00/In Ω
R3 Gnd Res. Rev: 0.05…500.00/In Ω
Z3 Sensit Ignd>3: 0.050…2.000 In
ZP Ground Reach: 0.05…500.00/In Ω
ZP Ground Angle: 20…90°
ZP Dynamic Tilt: Disabled or Enabled
ZP Tilt top line: -30°...30°
kZNP Res. Comp.: 0.00…10.00

kZNP Res. Angle: -180…90°
kZmP Mut. Comp.: 0.00…10.00
kZmP Mut. Angle: -180…90°
RP Gnd Resistive: 0.05…500.00/In Ω
ZP Sensit Ignd>P: 0.050…2.000 In
Z4 Gnd. Reach: 0.05…500.00/In Ω
Z4 Gnd. Angle: 20…90°
Z4 Dynamic Tilt: Disabled or Enabled
Z4 Tilt top line: -30°...30°
kZN4 Res. Comp.: 0.00…10.00
kZN4 Res. Angle: -180…90°
kZm4 Mut. Comp.: 0.00…10.00
kZm4 Mut. Angle: -180…90°
R4 Gnd. Resistive: 0.05…500.00/In Ω
Z4 Gnd Sensitivity: 0.050…2.000 In

Phase current differential protection

Phase Diff: Enabled or Disabled
Phase Is1:0.2 In...2 In
Phase Is2:1 In...30 In
Phase k1:30%...150%
Phase k2: 30%...150%
Phase Char: DT/IEC S Inverse/IEC V Inverse/ IEC E inverse/UK LT Inverse/IEEE M Inverse/IEEE V Inverse/IEEE E Inverse/US Inverse/US ST Inverse
Phase Time Delay: 0 s...100 s
Phase TMS: 0.025...1.2
Phase Time Dial: 0.01...100
PIT Time: 0 s...0.2 s
Ph CT Corr'tion:1...8
Compensation: None/Cap Charging/Vector Group
Susceptance: 1E-8*In...10*In
Inrush Restraint: Enabled/Disabled
Id High Set: 4*In...32*In
Vectorial Comp:Yy0 (0 deg)/Yd1 (-30 deg)/ Yy2 (-60 deg)/Yd3 (-90 deg)/Yy4 (-120 deg)/ Yd5 (-150 deg)/Yy6 (180 deg)/Yd7 (+150 deg)/Yy8 (+120 deg)/Yd9 (+90 deg)/Yy10 (+60 deg)/Yd11 (+30 deg)/Ydy0 (0 deg)/ Ydy6 (180 deg)
Phase Is1 CTS: 0.2*In...4*In
PIT I Selection: Local or Remote

Scheme logic

Basic scheme

Zone 1 Tripping: Disabled/ Phase only/Ground only/Phase and Ground
tZ1 Ph. Delay: 0 s...10 s
tZ1 Gnd. Delay: 0 s...10 s
Zone 2 Tripping: Disabled/Phase only/ Ground only/Phase and Ground
tZ2 Ph. Delay: 0 s...10 s
tZ2 Gnd. Delay: 0 s…10 s
Zone 3 Tripping: Disabled/Phase only/ Ground only/Phase and Ground
tZ3 Ph. Delay: 0 s...10 s
tZ2 Gnd. Delay: 0 s...10 s
Zone P Tripping: Disabled/Phase only/ Ground only/Phase and Ground
tZP Ph. Delay: 0 s...10 s
tZP Gnd. Delay: 0 s...10 s
Zone 4 Tripping: Disabled/Phase only/ Ground only/Phase and Ground
tZ4 Ph. Delay: 0 s...10 s
tZ4 Gnd. Delay: 0 s...10 s

Aided scheme 1

Aid 1 Selection: Disabled/PUR/PUR Unblocking/POR/POR/Unblocking/ Blocking 1/Blocking 2/ Prog Unblocking/Programmable
Aid 1 Distance: Disabled/ Phase Only/ Ground only/Phase and Ground
Aid 1 Dist. Dly: 0 s...1 s
Unblocking Delay: 0 s...0.1 s
Aid 1 DEF: Disabled/Enabled
Aid 1 DEF Dly: 0 s...1 s
Aid 1 DEF Trip: 1/3 Pole
Aid 1 Delta: 0.000… 1.000 s
Aid1 Delta Dly: 0.000…1.000 s
Aid1 DeltaTrip:
3 Pole
1 and 3 Pole
tREV Guard: 0 s...0.15 s
Unblocking Delay: 0 s...0.1 s
Send on Trip Aided / Z1, Any Trip or None
Weak Infeed: Disabled/ Echo/Echo and Trip
WI Sngl Pole Trp: Disabled/Enabled
WI V< Thresh: 10 V...70 V
WI Trip Delay: 0 s...1 s
Custom Send Mask: Bit 0 = Z1 Gnd/Bit 1 = Z2 Gnd/Bit 2 = Z4 Gnd/Bit 3 = Z1 Ph/Bit 4 = Z2 Ph/Bit 5 = Z4 Ph/Bit 6 = DEF Fwd/Bit 7 = DEF Rev/Bit
Custom Time PU: 0 s...1 s
Custom Time DO: 0 s...1 s

Aided scheme 2
(As per aided scheme 1)

Trip on close

SOTF Status: Disabled/Enabled Pole Dead/Enabled ExtPulse/En Pdead + Pulse
SOTF Delay: 0.2s...1000s
SOTF Tripping: Bit 0 = Zone 1/Bit 1 = Zone 2/Bit 2 = Zone 3/Bit 3 = Zone P/Bit 4 = Zone 4/Bit5=CNV
TOR Status: Disabled/Enabled
TOR Tripping: Bit 0 = Zone 1/Bit 1 = Zone 2/Bit 2 = Zone 3/Bit 3 = Zone P/Bit 4 = Zone 4/Bit5=CNV
TOC Reset Delay: 0.1 s...2 s
TOC Delay 0.05 s…0.2 s
SOTF Pulse: 0.1 s...10 s

TD

TD

Z1 extension

Z1 Ext Scheme: Disabled/Enabled/En. on Ch1 Fail/En. On Ch2 Fail/En All Ch Fail/En. anyCh Fail
Z1 Ext Ph: 100%...200%
Z1 Ext Gnd: 100%...200%

Loss of load

LOL Scheme: Disabled/Enabled/En. on Ch1 Fail/En. On Ch2 Fail/En All Ch Fail/En. Any Ch Fail
LOL <I: 0.05 x In...1 x In
LOL Window: 0.01 s 0.1 s Phase

Phase overcurrent (overcurrent)

I>1 Status:
Disabled
Enabled
Enabled VTS
Enabled Ch Fail
En VTSorCh Fail
En VTSandCh Fail
I>1 Function:
DT
IEC S Inverse
IEC V Inverse
IEC E Inverse
UK LT Inverse
IEEE M Inverse
IEEE V Inverse
IEEE E Inverse
US Inverse
US ST Inverse
I>1 Directional:
Non-Directional
Directional Fwd
Directional Rev
I>1 Current Set: 0.08…4.00 In
I>1 Time Delay: 0.00…100.00 s
I>1 TMS: 0.025…1.200
I>1 Time Dial: 0.01…100.00
I>1 Reset Char: DT/Inverse
I>1 tRESET: 0.00…100.00 s
I>2 Status
(up to):
I>2 tRESET
All settings and options chosen from the same ranges as per the first stage overcurrent, I>1.
I>3 Status:
Disabled
Enabled
Enabled VTS
Enabled Ch Fail
En VTSorCh Fail
En VTSandCh Fail
I>3 Directional:
Non-Directional
Directional Fwd
Directional Rev
I>3 Current Set: 0.08…32.00 In
I>3 Time Delay: 0.00…100.00 s
I>4 Status
(up to):
I>4 Time Delay
All settings and options chosen from the same ranges as per the third stage overcurrent, I>3.
I> Char Angle: -95…95°
I> Blocking:
Binary function link string, selecting which overcurrent elements (stages 1 to 4) will be blocked if VTS detection of fuse failure occurs.

Negative sequence overcurrent (Neg Seq O/C)

I2>1 Status: Enabled/Disabled
I2>1 Function:
Disabled
DT
IEC S Inverse
IEC V Inverse
IEC E Inverse
UK LT Inverse
IEEE M Inverse
IEEE V Inverse
IEEE E Inverse
US Inverse
US ST Inverse
I2>1 Direction:
Non-Directional
Directional Fwd
Directional Rev
I2>1 Current Set: 0.08…4.00 In
I2>1 Time Delay: 0.00…100.00 s
I2>1 TMS: 0.025…1.200
I2>1 Time Dial: 0.01…100.00
I2>1 Reset Char.: DT/Inverse
I2>1 tRESET: 0.00…100.00 s
I2>2 Status
(up to):
I2>2 tRESET
All settings and options chosen from the same ranges as per the first stage overcurrent, I2>1.
I2>3 Status:
Disabled
Enabled
I2>3 Direction:
Non-Directional
Directional Fwd
Directional Rev
I2>3 Current Set: 0.08…32.00 In
I2>3 Time Delay: 0.00…100.00 s
I2>4 Status
(up to):
I2>4 Time Delay
All settings and options chosen from the same ranges as per the third stage overcurrent, I2>3.
I2> VTS Blocking:
Binary function link string, selecting which Neg. Seq. O/C elements (stages 1 to 4) will be blocked if VTS detection of fuse failure occurs

I2> Char Angle: -95…95 o
I2> V2pol Set:
0.5…25.0 (100 – 110 V)

Broken conductor

Broken Conductor: Disabled/Enabled
I2/I1 Setting: 0.20…1.00
I2/I1 Time Delay: 0.0…100.0 s

Ground overcurrent (earth fault)

IN>1 Status:
Disabled
Enabled
Enabled VTS
Enabled Ch Fail
En VTSorCh Fail
En VTSandCh Fail
IN>1 Function:
DT
IEC S Inverse
IEC V Inverse
IEC E Inverse
UK LT Inverse
IEEE M Inverse
IEEE V Inverse
IEEE E Inverse
US Inverse
US ST Inverse
IDG
IN>1 Directional:
Non-Directional
Directional Fwd
Directional Rev
IN>1 Current Set: 0.08…4.00 In
IN>1 IDG Is: 1...4
IN>1 IDG Time: 1…2
IN>1 Time Delay: 0.00…100.00 s
IN>1 TMS: 0.025…1.200
IN>1 Time Dial: 0.01…100.00
IN>1 Reset Char: DT/Inverse
IN>1 tRESET: 0.00…100.00 s
IN>2 Status
(up to):
IN>2 tRESET
All settings and options chosen from the same ranges as per the first stage ground overcurrent, IN>1.
IN>3 Status:
Disabled
Enabled
Enabled VTS
Enabled Ch Fail
En VTSorCh Fail
En VTSandCh Fail
IN>3 Directional:
Non-Directional
Directional Fwd
Directional Rev
IN>3 Current Set: 0.08…32.00 In
IN>3 Time Delay: 0.00…100.00 s
IN>4 Status
(up to):
IN>4 Time Delay
All settings and options chosen from the same ranges as per the third stage ground overcurrent, IN>3.
IN> Blocking:
Binary function link string, selecting which ground overcurrent elements (stages 1 to 4) will be blocked if VTS detection of fuse failure occurs.
IN> DIRECTIONAL
IN> Char Angle: -95…95°
IN> Polarization:
Zero Sequence
Neg Sequence
IN> VNpol Set: 0.5…40.0 V
IN> V2pol Set: 0.5…25.0 V
IN> I2pol Set: 0.02…1.00 In

Directional aided schemes - DEF settings

DEF Status: Disabled/Enabled
DEF Polarizing:
Zero Sequence *(virtual current pol)*
Neg Sequence
DEF Char Angle: -95…95°
DEF VNpol Set: 0.5…40.0 V
DEF V2pol Set: 0.5…25.0 V
DEF FWD Set: 0.08…1.00 In
DEF REV Set: 0.04…1.00 In

Sensitive earth fault

Sens E/F Options: SEF Enabled
Wattmetric SEF
ISEF>1 Function: IDMT Curve Type
Disabled
DT
IEC S Inverse
IEC V Inverse
IEC E Inverse
UK LT Inverse
IEEE M Inverse
IEEE V Inverse
IEEE E Inverse
US Inverse
US ST Inverse
IDG
ISEF>1 Directional:
Non-Directional
Directional Fwd
Directional Rev
ISEF>1 Current Set: 0.005…0.1 In_{SEF}
ISEF>1 IDG Is: 1...4
ISEF>1 IDG Time: 1…2 s
ISEF>1 Time Delay: 0 s…..200 s
ISEF>1 TMS: 0.025…1.2
ISEF>1 Time Dial: 0.01…100
ISEF>1 Reset Char: DT/Inverse
ISEF>1 tRESET: 0 s-100 s
ISEF>2 as ISEF>1
ISEF>3 Status:
Disabled
Enabled

TD

TD

ISEF>3 Directional:
Non-Directional
Directional Fwd
Directional Rev
ISEF>3 Current Set: 0.005…0.8 In_{SEF}
ISEF>3 Time Delay: 0 s…200 s
ISEF>3 Intertrip: Enabled/Disabled
ISEF>4 as ISEF>3
ISEFN> Blocking
Bit 0 VTS Blks ISEF>1
Bit 1 VTS Blks ISEF>2
Bit 2 VTS Blks ISEF>3
Bit 3 VTS Blks ISEF>4
Bit 4 A/R Blks ISEF>3
Bit 5 A/R Blks ISEF>4
Bit 6 Not Used
Bit 7 Not Used
ISEF> Directional
ISEF> Char Angle: -95°…95° deg
ISEF> VNpol Set: 0.5…80 V
Wattmetric SEF
PN> Setting: 0...20 In_{SEF} W

Neutral voltage displacement (residual O/V NVD)

VN>1 Function:
Disabled
DT
IDMT
VN>1 Voltage Set: 1…80 V
VN>1 Time Delay: 0.00…100.00 s
VN>1 TMS: 0.5…100.0
VN>1 tReset: 0.00…100.00 s
VN>2 Status: Disabled/Enabled
VN>2 Voltage Set: 1…80 V
VN>2 Time Delay: 0.00…100.00 s

Thermal overload

Characteristic:
Disabled
Single
Dual
Thermal Trip: 0.08…4.00 In
Thermal Alarm: 50…100%
Time Constant 1: 1…200 mins
Time Constant 2: 1…200 mins

Power swing/out of step (power swing)

Power Swing:
Blocking
Indication
PSB Reset Delay: 0.05…2.00 s
Zone 1 Ph PSB: Blocking/Allow Trip
(up to):
Zone 4 Ph PSB: Blocking/Allow Trip
Zone 1 Gnd PSB: Blocking/Allow Trip
(up to):
Zone 4 Gnd PSB: Blocking/Allow Trip
PSB Unblocking: Disabled/Enabled
PSB Unblock Delay: 0.1…10.0 s
PSB Reset Delay: 0.5…2.0 s

Out of step

OST (Out of Step Tripping) mode:
Disabled
Predictive and OST Trip
OST Trip
Predictive OST
Z5 Fwd Reach: 0.1…500.00/In Ω
Z6 Fwd Reach: 0.1…500.00/In Ω
Z5' Rev Reach: 0.1…500.00/In Ω
Z6' Rev Reach: 0.1…500.00/In Ω
R5 Res. Fwd: 0.1…200.00/In Ω
R6 Res. Fwd: 0.1…200.00/In Ω
R5' Res. Rev: -0.1…-200.00/In Ω
R6' Res. Rev: -0.1…-200.00/In Ω
α Blinder Angle: 20…90°
Delta t Time Setting: 0.02 s…1 s
Tost Time Delay Setting: 0 s…1 s

Undervoltage protection

V< Measur't Mode:
V<1 & V<2 Ph-Ph,
V<1 & V<2 Ph-N,
V<1Ph-Ph V<2Ph-N,
V<1Ph-N V<2Ph-Ph
V< Operate Mode:
V<1 & V<2 Any Ph
V<1 & V<2 3Phase
V<1AnyPh V<2 3Ph
V<1 3Ph V<2AnyPh
V<1 Function:
Disabled
DT
IDMT
V<1 Voltage Set: 10…120 V
V<1 Time Delay: 0.00…100.00 s
V<1 TMS: 0.5…100.0
V<1 Poledead Inh: Disabled/Enabled
V<2 Status: Disabled/Enabled
V<2 Voltage Set: 10…120 V
V<2 Time Delay: 0.00…100.00 s
V<2 Poledead Inh: Disabled/Enabled

Overvoltage protection

V> Measur't Mode:
V>1 & V>2 Ph-Ph,
V>1 & V>2 Ph-N,
V>1Ph-Ph V>2Ph-N,
V>1Ph-N V>2Ph-Ph
V> Operate Mode:
V>1 & V>2 Any Ph
V>1 & V>2 3Phase
V>1AnyPh V>2 3Ph
V>1 3Ph V>2AnyPh
V>1 Function:
Disabled
DT
IDMT
V>1 Voltage Set: 60…185 V
V>1 Time Delay: 0.00…100.00 s
V>1 TMS: 0.5…100.0
V>2 Status: Disabled/Enabled
V>2 Voltage Set: 60…185 V

V>2 Time Delay: 0.00…100.00 s
V1>1 Cmp Funct:
Disabled
DT
IDMT

V1>1 Cmp Vlt Set: 60…110 V
V1>1 Cmp Tim Dly: 0.00…100.00 s
V1>1 CmpTMS: 0.5…100.0
V1>2 Cmp Status: Disabled/Enabled
V1>2 Vlt Set: 60…110 V
V1>2 CmpTim Dly: 0.00…100.00 s

Underfrequency protection

F<1 Status: Disabled/Enabled
F<1 Setting: 45.00…65.00 Hz
F<1 Time Delay: 0.00…100.00 s
F<2 Status
(up to):
F<4 Time Delay
All settings and options chosen from the same ranges as per the 1st stage
F< Function Link:
Binary function link string, selecting which frequency elements (stages 1 to 4) will be blocked by the pole-dead logic

Overfrequency protection

F>1 Status: Disabled/Enabled
F>1 Setting: 45.00…65.00Hz
F>1 Time Delay: 0.00…100.00s
F>2 Status
(up to):
F>2 Time Delay
All settings and options chosen from the same ranges as per the 1st stage

Rate-of-change of frequency protection (df/dt protection)

df/dt Avg. Cycles: 6…12
df/dt>1 Status: Disabled/Enabled
df/dt>1 Setting: 0.1…10.0 Hz
df/dt>1 Dir'n.: Negative/Positive/Both
df/dt>1 Time: 0.00…100.00 s
df/dt>2 Status:
(up to):
df/dt>4 Time
All settings and options chosen from the same ranges as per the 1st stage.

Circuit breaker fail

CB Fail 1 Status: Disabled/Enabled
CB Fail 1 Timer: 0.00…10.00 s
CB Fail 2 Status: Disabled/Enabled
CB Fail 2 Timer: 0.00…10.00 s
Volt Prot Reset:
I< Only
CB Open & I<
Prot Reset & I<
Ext Prot Reset:
I< Only
CB Open & I<
Prot Reset & I<
WI Prot Reset: Disabled/Enabled
Undercurrent
I< Current Set: 0.02…3.20 In
ISEF< Current Set: 0.001…0.8 In_{SEF}
Poledead
V< : 10 …40 V

Supervision

VT Supervision
VTS Mode: Measured + MCB, Measured Only or MCB Only
VTS Status: Disabled/Blocking/Indication
VTS Reset Mode: Manual/Auto
VTS Time Delay: 1 s...10 s
VTS I> Inhibit: 0.08....32 x In
VTS I2> Inhibit: 0.05...0.5 x In
Inrush Detection
I> 2nd Harmonic: 10%...100%
Weak Infeed Blk
WI Inhibit: Disabled/Enabled
I0/I2 Setting: 2...3
CTS Mode: Disabled, Standard, I Diff, Idiff + Standard
CTS Status: Restrain, Indication,
CTS Reset Mode: Manual or Auto
CTS Time Delay: 0...10 s
CTS VN< Inhibit: 0.5 V...22 V
CTS i1>: 0.05*In...4.0*In
CTS i2/i1>: 0.05...1
CTS i2/i1>>: 0.05...1

Systems check

Bus-Line Synchronism and Voltage Checks (System Checks)

P543 and P545 system checks:
Voltage Monitors
Live Voltage: 1.0…132.0 V
Dead Voltage: 1.0…132.0 V
Synchrocheck (Check Synch)
CS1 Status: Disabled/Enabled
CS1 Phase Angle: 0…90°
CS1 Slip Control:
None
Timer
Frequency
Both
CS1 Slip Freq: 0.02…1.00 Hz
CS1 Slip Timer: 0.0…99.0 s
CS2 Status
(up to):
CS2 Slip Timer
All settings and options chosen from the same ranges as per the first stage CS1 element.
CS Undervoltage: 10.0…132.0 V
CS Overvoltage: 60.0…185.0 V
CS Diff Voltage: 1.0…132.0 V
CS Voltage Block:
None
Undervoltage

TD

Overvoltage
Differential
UV & OV
UV & DiffV
OV & DiffV
UV, OV & DiffV
System Split
SS Status: Disabled/Enabled
SS Phase Angle: 90…175°
SS Under V Block: Disabled/Enabled
SS Undervoltage: 10.0…132.0 V
SS Timer: 0.0…99.0 s

TD

P544 and P546 system checks:
Voltage Monitors
Live Line: 5…132 V
Dead Line: 5…132 V
Live Bus 1: 5…132 V
Dead Bus 1: 5…132 V
Live Bus 2: 5…132 V
Dead Bus 2: 5…132 V
CS UV: 5…120 V
CS OV: 60…200 V
Sys Checks CB1: Enabled/Disabled
CB1 CS Volt. Blk: V< , V> , Vdiff.> , V< and V>, V< and Vdiff> , V> and Vdiff> , V< V> and Vdiff> , None
CB1 CS1: Status Enabled or Disabled
CB1 CS1 Angle: 0…90°
CB1 CS1 Vdiff: 1…120 V
CB1 CS1 SlipCtrl: Enabled/Disabled
CB1 CS1 SlipFreq: 5 mHz…2 Hz
CB1 CS2: Status Enabled/Disabled
CB1 CS2 Angle: 0…90°
CB1 CS2 Vdiff: 1…120 V
CB1 CS2 SlipCtrl: Enabled/Disabled
CB1 CS2 SlipFreq: 5 mHz…2 Hz
CB1 CS2 Adaptive: Enabled/Disabled
CB1 CI Time: 10.0 ms…0.5 s
Sys Checks CB2:
(up to):
CB2 CI Time:
All settings and options chosen from the same ranges as per the first controlled circuit breaker, CB1.
Manual System Checks
Num CBs: CB1 only, CB2 only, CB1 & CB2.
CB1M SC required: Enabled/Disabled
CB1M SC CS1: Enabled/Disabled
CB1M SC CS2: Enabled/Disabled
CB1M SC DLLB: Enabled/Disabled
CB1M SC LLDB: Enabled/Disabled
CB1M SC DLDB: Enabled/Disabled
CB2M SC required:
(up to):
CB2M SC DLDB:
All settings and options chosen from the same ranges as per the first controlled circuit breaker, CB1.

Auto-reclose

P543 and P545 auto-reclose:
Single Pole Shot: 1/2/3/4
Three Pole Shot: 1/2/3/4
1 Pole Dead Time: 0.05…5.00 s
Dead Time 1: 0.05…100.00 s
Dead Time 2: 1…1800 s
Dead Time 3: 1…3600 s
Dead Time 4: 1…3600 s
CB Healthy Time: 1…3600 s
Reclaim Time: 1…600 s
AR Inhibit Time: 0.01…600.00 s
Check Sync Time: 0.01…9999.00 s
Z2T AR:
(up to):
Z4T AR:
No Action
Initiate AR
Block AR
All time-delayed distance zones can be independently set not to act upon AR logic, to initiate a cycle, or to block.
DEF Aided AR:
Initiate AR
Block AR
TOR:
Initiate AR
Block AR
I>1 AR:
(up to):
I>4 AR:
No Action
Initiate AR
Block AR
All overcurrent stages can be independently set not to act upon AR logic, to initiate a cycle, or to block.
IN>1 AR:
(up to):
IN>4 AR:
No Action
Initiate AR
Block AR
All ground/earth overcurrent stages can be independently set not to act upon AR logic, to initiate a cycle, or to block.
ISEF>1 AR:
(up to):
ISEF>4 AR:
No Action
Initiate AR
Block AR
All ground/earth overcurrent stages can be independently set not to act upon AR logic, to initiate a cycle, or to block.
Mult Phase AR:
Allow Autoclose
BAR 2 and 3Ph
BAR 3 Phase
Dead Time Start:
Protection Op
Protection Reset
Discrim Time: 0.10…5.00 s

System Checks
CheckSync1 Close: Disabled/Enabled
CheckSync2 Close: Disabled/Enabled
LiveLine/DeadBus: Disabled/Enabled
DeadLine/LiveBus: Disabled/Enabled
DeadLine/DeadBus: Disabled/Enabled
CS AR Immediate: Disabled/Enabled
SysChk on Shot 1: Disabled/Enabled

P544 and P546 Auto-reclose:
Num CBs: CB1 only, CB2 only, Both CB1 & CB2
Lead/Foll AR Mode: L1P F1P, L1P F3P, L3P F3P, L1/3P F1/3P, L1/3P F3P, Opto
AR Mode: AR 1P, AR 1/3P, AR 3P,AR Opto
Leader Select By: Leader by Menu, Leader by Opto, Leader by Ctrl
Select Leader: Sel Leader CB1, Sel Leader CB2
BF if LFail Cls: Enabled/Disabled
Dynamic F/L: Enabled/Disabled
AR Shots: 1…4
Multi Phase AR: Allow Autoclose, BAR 2 and 3 ph, BAR 3 phase
Discrim Time: 20 ms…5 s
CB IS Time: 5…200 s
CB IS MemoryTime: 10 ms…1 s
DT Start by Prot: Protection Reset, Protection Op, Disabled
3PDTStart WhenLD: Enabled/Disabled
DTStart by CB Op: Enabled/Disabled
Dead Line Time: 1…9999 s
SP AR Dead Time: 0…10 s
3P AR DT Shot 1: 10 ms…300 s
3P AR DT Shot 2: 1…9999 s
3P AR DT Shot 3: 1…9999 s
3P AR DT Shot 4: 1…9999 s
Follower Time: 100 ms…300 s
SPAR ReclaimTime: 1…600 s
3PAR ReclaimTime: 1…600s
AR CBHealthy Time: 0.01…9999 s
AR CheckSync Time: 0.01…9999 s
Z1 AR:
Initiate AR
Block AR
Diff AR:
Initiate AR
Block AR
Dist. Aided AR:
Initiate AR
Block AR
Z2T AR:
(up to):
Z4T AR:
No Action
Initiate AR
Block AR
All time-delayed distance zones can be independently set not to act upon AR logic, to initiate a cycle, or to block.
DEF Aided AR:
Initiate AR
Block AR
Dir. Comp AR:
Initiate AR
Block AR
TOR:
Initiate AR
Block AR
I>1 AR:
(up to):
I>4 AR:
No Action
Initiate AR
Block AR
All overcurrent stages can be independently set not to act upon AR logic, to initiate a cycle, or to block.
IN>1 AR:
(up to):
IN>4 AR:
No Action
Initiate AR
Block AR
All ground/earth overcurrent stages can be independently set not to act upon AR logic, to initiate a cycle, or to block.
ISEF>1 AR:
(up to):
ISEF>4 AR:
No Action
Initiate AR
Block AR
All ground/earth overcurrent stages can be independently set not to act upon AR logic, to initiate a cycle, or to block.

Auto-reclose system checks
CB1L SC all: Enabled/Disabled
CB1L SC Shot 1: Enabled/Disabled
CB1L SC ClsNoDly: Enabled/Disabled
CB1L SC CS1: Enabled/Disabled
CB1L SC CS2: Enabled/Disabled
CB1L SC DLLB: Enabled/Disabled
CB1L SC LLDB: Enabled/Disabled
CB1L SC DLDB: Enabled/Disabled
CB2L SC all: Enabled/Disabled
CB2L SC Shot 1: Enabled/Disabled
CB2L SC ClsNoDly: Enabled/Disabled
CB2L SC CS1: Enabled/Disabled
CB2L SC CS2: Enabled/Disabled
CB2L SC DLLB: Enabled/Disabled
CB2L SC LLDB: Enabled/Disabled
CB2L SC DLDB: Enabled/Disabled
CB1F SC all: Enabled/Disabled
CB1F SC Shot 1: Enabled/Disabled
CB1F SC CS1: Enabled/Disabled
CB1F SC CS2: Enabled/Disabled
CB1F SC DLLB: Enabled/Disabled
CB1F SC LLDB: Enabled/Disabled
CB1F SC DLDB: Enabled/Disabled

TD

CB2F SC all:	Enabled/Disabled
CB2F SC Shot 1:	Enabled/Disabled
CB2F SC CS1:	Enabled/Disabled
CB2F SC CS2:	Enabled/Disabled
CB2F SC DLLB:	Enabled/Disabled
CB2F SC LLDB:	Enabled/Disabled
CB2F SC DLDB:	Enabled/Disabled

Opto input labels

Opto Input 1:
(up to):
Opto Input 32:
User defined text string to describe the function of the particular opto input.

Output labels

Relay 1:
(up to):
Relay 32:
User defined text string to describe the function of the particular relay output contact.

Measurements list

Measurements 1

Iφ Magnitude
Iφ Phase Angle
Per phase (φ = A, B, C) current measurements
IN derived Mag
IN derived Angle
ISEF Mag
ISEF Angle
I1 Magnitude
I2 Magnitude
I0 Magnitude
Iφ RMS
Per phase (φ = A, B, C) RMS current measurements
IN RMS
Vφ-φ Magnitude
Vφ-φ Phase Angle
Vφ Magnitude
Vφ Phase Angle
All phase-phase and phase-neutral voltages (φ = A, B, C).
V1 Magnitude
V2 Magnitude
V0 Magnitude
Vφ RMS
Vφ-φ RMS
All phase-phase and phase-neutral voltages (φ = A, B, C).
Frequency
(CB1) CS Volt Mag
(CB1) CS Volt Ang
(CB1) Bus-Line Ang
(CB1) CS Slip Freq
IM Magnitude
IM Phase Angle
I1 Magnitude
I1 Phase Angle
I2 Magnitude
I2 Phase Angle
I0 Magnitude
I0 Phase Angle
V1 Magnitude
V1 Phase Angle
V2 Magnitude
V2 Phase Angle
V0 Magnitude
V0 Phase Angle
CB2 CS Volt Mag (P544 and P546 only)
CB2 CS Volt Ang (P544 and P546 only)
CB2 Bus-Line Ang (P544 and P546 only)
CB2 CS Slip Freq (P544 and P546 only)
V1 Rem Magnitude
V1 Rem Phase Ang

Measurements 2

φ Phase Watts
φ Phase VArs
φ Phase VA
All phase segregated power measurements, real, reactive and apparent (φ = A, B, C).
3 Phase Watts
3 Phase VArs
3 Phase VA
Zero Seq Power
3Ph Power Factor
φPh Power Factor
Independent power factor measurements for all three phases (φ = A, B, C).
3Ph WHours Fwd
3Ph WHours Rev
3Ph VArHours Fwd
3Ph VArHours Rev
3Ph W Fix Demand
3Ph VArs Fix Dem
Iφ Fixed Demand
Maximum demand currents measured on a per phase basis (φ = A, B, C).
3Ph W Roll Dem
3Ph VArs Roll Dem
Iφ Roll Demand
Maximum demand currents measured on a per phase basis (φ = A, B, C).
3Ph W Peak Dem
3Ph VAr Peak Dem
Iφ Peak Demand
Maximum demand currents measured on a per phase basis (φ = A, B, C).
Thermal State

Measurements 3

IA Local
IA Angle Local
IB Local
IB Angle Local
IC Local
IC Angle Local
IA remote 1

IA Ang remote 1
IB remote 1
IB Ang remote 1
IC remote 1
IC Ang remote 1
IA remote 2
IA Ang remote 2
IB remote 2
IB Ang remote 2
IC remote 2
IC Ang remote 2
IA Differential
IB Differential
IC Differential
IA Bias
IB Bias
IC Bias

Measurements 4

Ch 1 Prop Delay
Ch 2 Prop Delay
Ch1 Rx Prop Delay
Ch1 Tx Prop Delay
Ch2 Rx Prop Delay
Ch2 Tx Prop Delay
Channel 1 Status
Channel 2 Status
Channel Status:
Bit 0= Rx
Bit 1= Tx
Bit 2= Local GPS
Bit 3= Remote GPS
Bit 4= Mux Clk F Error
Bit 5= Signal Lost
Bit 6= Path Yellow
Bit 7= Mismatch RxN
Bit 8= Timeout
Bit 9= Message Level
Bit 10= Passthrough
Bit 11= Hardware B to J model
Bit 12= Max Prop Delay
Bit 13= Max Tx-Rx Time

Binary function link strings denoting channel errors, and when self-healing has been initiated in 3-terminal applications.

IM[64] Rx Status
Statistics
Last Reset on
Date/Time
Ch1 No. Vald Mess
Ch1 No. Err Mess
Ch1 No. Errored s
Ch1 No. Sev Err s
Ch1 No. Dgraded m
Ch2 No. Vald Mess
Ch2 No. Err Mess
Ch2 No. Errored s
Ch2 No. Sev Err s
Ch2 No. Dgraded m
Max Ch 1 Prop Delay
Max Ch 2 Prop Delay
Max Ch1 TxRx Time
Max Ch2 TxRx Time
Clear Statistics

Circuit breaker monitoring statistics

CB Operations
CB φ Operations

Circuit breaker operation counters on a per phase basis (φ = A, B, C).

Total Iφ Broken

Cumulative breaker interruption duty on a per phase basis (φ = A, B, C).

CB Operate Time

For a second circuit breaker (P544 and P546 only)

CB2 Operations
CB2 φ Operations

Circuit breaker operation counters on a per phase basis (φ = A, B, C).

CB2 Iφ Broken

Cumulative breaker interruption duty on a per phase basis (φ = A, B, C).

CB 2Operate Time

Fault record proforma

The following data is recorded for any relevant elements that operated during a fault, and can be viewed in each fault record.

Time & Date
Model Number:
Address:
Event Type: Fault record
Event Value
Faulted Phase:

Binary data strings for fast polling of which phase elements started or tripped for the fault recorded.

Start Elements
Trip Elements

Binary data strings for fast polling of which protection elements started or tripped for the fault recorded.

Fault Alarms

Binary data strings for fast polling of alarms for the fault recorded.

Fault Time
Active Group: 1/2/3/4
System Frequency: Hz
Fault Duration: s
CB Operate Time: s
Relay Trip Time: s
Fault Location: km/miles/Ω/%
I φPre Flt
Iφ Angle Pre Flt

Per phase record of the current magnitudes and phase angles stored before the fault inception.

IN Prefault Mag
IN Prefault Ang
IM Prefault Mag
IM Prefault Ang

TD

TD

Vφ Prefault Mag
Vφ Prefault Ang
Per phase record of the voltage magnitudes and phase angles stored before the fault inception.
VN Prefault Mag
VN Prefault Ang
Iφ Fault Mag
Iφ Fault Ang
Per phase record of the current magnitudes and phase angles during the fault.
IN Fault Mag
IN Fault Ang
IM Fault Mag
IM Fault Ang
Vφ Fault Mag
Vφ Fault Ang
Per phase record of the voltage magnitudes and phase angles during the fault.
VN Fault Mag
VN Fault Ang
IA local
IB local
IC local
IA remote 1
IB remote 1
IC remote 1
IA remote 2
IB remote 2
IC remote 2
IA Differential
IB Differential
IC Differential
IA Bias
IB Bias
IC Bias

GS

GETTING STARTED

Date:	**16th March 2009**
Hardware suffix:	**K**
Software version:	**45 (P543/4/5/6 without Distance)** **55 (P543/4/5/6 with Distance)**
Connection diagrams:	**10P54302 (SH 1 to 2)** **10P54303 (SH 1 to 2)** **10P54400** **10P54404 (SH 1 to 2)** **10P54405 (SH 1 to 2)** **10P54502 (SH 1 to 2)** **10P54503 (SH 1 to 2)** **10P54600** **10P54604 (SH 1 to 2)** **10P54605 (SH 1 to 2)** **10P54606 (SH 1 to 2)**

GS

CONTENTS

GS

FIGURES

1. GETTING STARTED

1.1 User interfaces and menu structure

The settings and functions of the MiCOM protection and control relays are available from the front panel keypad and LCD, and through the front and rear communication ports.

1.2 Introduction to the relay

1.2.1 Front panel

Figure 1 shows the front panel of the relay; the hinged covers at the top and bottom of the front panel are shown open. An optional transparent front cover physically protects the front panel. With the cover in place, access to the user interface is read-only. Removing the cover allows access to the relay settings and does not compromise the protection of the product from the environment.

When editing relay settings, full access to the relay keypad is needed. To remove the front panel:

1. Open the top and bottom covers, then unclip and remove the transparent cover. If the lower cover is secured with a wire seal, remove the seal.
2. Using the side flanges of the transparent cover, pull the bottom edge away from the relay front panel until it is clear of the seal tab.
3. Move the cover vertically down to release the two fixing lugs from their recesses in the front panel.

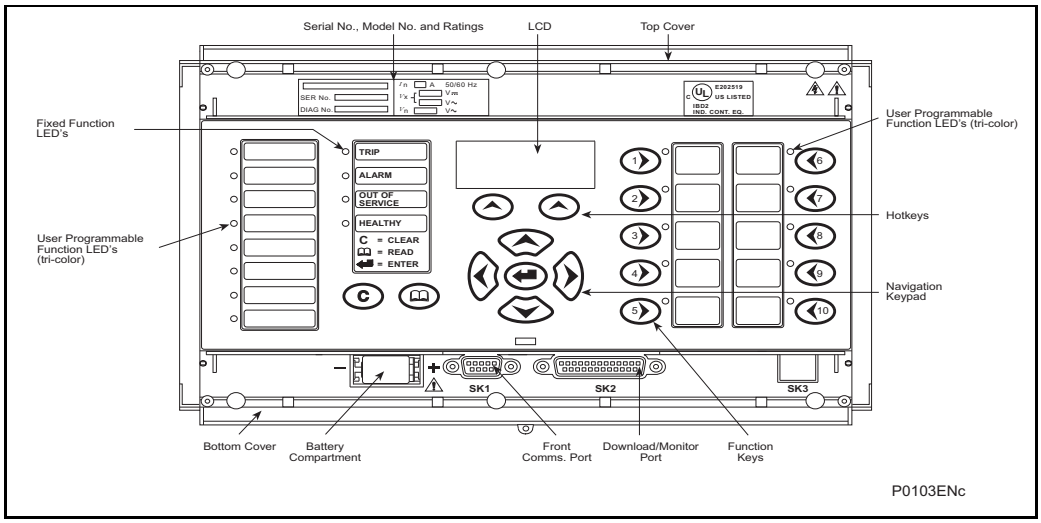

Figure 1 Relay front view

The front panel of the relay includes the following, as indicated in Figure 1.

- A 16-character by 3-line alphanumeric liquid crystal display (LCD)
- A 19-key keypad comprising 4 arrow keys (⟨, ⟩, ⌃ and ⌄), an enter key (↵), a clear key (C), a read key (📖), 2 hot keys (⟨7⟩) and 10 (⟨1⟩ – ⟨10⟩) programmable function keys
- Function key functionality. The relay front panel features control pushbutton switches with programmable LEDs that facilitate local control. Factory default settings associate specific relay functions with these 10 direct-action pushbuttons and LEDs e.g. Enable/Disable the auto-recloser function. Using programmable scheme logic, the user can readily change the default direct-action pushbutton functions and LED indications to fit specific control and operational needs.

GS

- Hotkey functionality:
  - SCROLL Starts scrolling through the various default displays.
  - STOP Stops scrolling the default display.
  - For control of setting groups, control inputs and circuit breaker operation
- 22 LEDs; 4 fixed function LEDs, 8 tri-color programmable function LEDs on the left hand side of the front panel and 10 tri-color programmable function LEDs on the right hand side associated with the function keys
- Under the top hinged cover:
  - The relay serial number, and the relay's current and voltage rating information
- Under the bottom hinged cover:
  - Battery compartment to hold the 1/2 AA size battery which is used for memory back-up for the real time clock, event, fault and disturbance records
  - A 9-pin female D-type front port for communication with a PC locally to the relay (up to 15m distance) via an EIA(RS)232 serial data connection
  - A 25-pin female D-type port providing internal signal monitoring and high speed local downloading of software and language text via a parallel data connection

1.2.2 LED indications

Fixed Function

The four fixed function LEDs on the left-hand side of the front panel are used to indicate the following conditions:

- Trip (Red) indicates that the relay has issued a trip signal. It is reset when the associated fault record is cleared from the front display. (Alternatively the trip LED can be configured to be self-resetting)*.
- Alarm (Yellow) flashes to indicate that the relay has registered an alarm. This may be triggered by a fault, event or maintenance record. The LED will flash until the alarms have been accepted (read), after which the LED will change to constant illumination, and will extinguish, when the alarms have been cleared.
- Out of service (Yellow) indicates that the relay's protection is unavailable.
- Healthy (Green) indicates that the relay is in correct working order, and should be on at all times. It will be extinguished if the relay's self-test facilities indicate that there is an error with the relay's hardware or software. The state of the healthy LED is reflected by the watchdog contact at the back of the relay.

To adjust the LCD contrast, from the **CONFIGURATION** column, select **LCD Contrast**. This is only needed in very hot or cold ambient temperatures.

Programmable LEDs

All the programmable LEDs are tri-color and can be programmed to indicate RED, YELLOW or GREEN depending on the requirements. The 8 programmable LEDs on the left are suitable for programming alarm indications and the default indications and functions are indicated in the table below. The 10 programmable LEDs physically associated with the function keys, are used to indicate the status of the associated pushbutton's function and the default indications are shown below:

The default mappings for each of the programmable LEDs are as shown in the following table:

LED number	Default indication	P543	P544	P545	P546
1	Red	Diff Trip	Diff Trip	Diff Trip	Diff Trip
2	Red	Dist Inst Trip	Dist Inst Trip	Dist Inst Trip	Dist Inst Trip
3	Red	Dist Delay Trip	Dist Delay Trip	Dist Delay Trip	Dist Delay Trip
4	Red	Signaling Fail	Signaling Fail	Signaling Fail	Signaling Fail
5	Red	Any Start	Any Start	Any Start	Any Start
6	Red	AR in Progress	Not Used	AR in Progress	Not Used
7	Green	AR Lockout	Not Used	AR Lockout	Not Used
8	Red	Test Loopback	Test Loopback	Test Loopback	Test Loopback
F1		Not Used	Not Used	Not Used	Not Used
F2		Not Used	Not Used	Not Used	Not Used
F3		Not Used	Not Used	Not Used	Not Used
F4		Not Used	Not Used	Not Used	Not Used
F5		Not Used	Not Used	Not Used	Not Used
F6		Not Used	Not Used	Not Used	Not Used
F7		Not Used	Not Used	Not Used	Not Used
F8		Not Used	Not Used	Not Used	Not Used
F9		Not Used	Not Used	Not Used	Not Used
F10		Not Used	Not Used	Not Used	Not Used

1.2.3 Relay rear panel

The rear panel of the relay is shown in Figure 2. All current and voltage signals, digital logic input signals and output contacts are connected at the rear of the relay. Figure 2 shows:

Slot A: Optional IRIG-B and ETHERNET - IEC 61850 - board

Slot B: Fiber communication board for differential teleprotection including GPS sampling synchronization

Slot C: Analogue (CT& VT) Input Board

Slot D and F: Opto-isolated inputs boards

Slot G and H: Relay output contacts boards

Slot J: Power Supply/EIA(RS)485 Communications board

GS

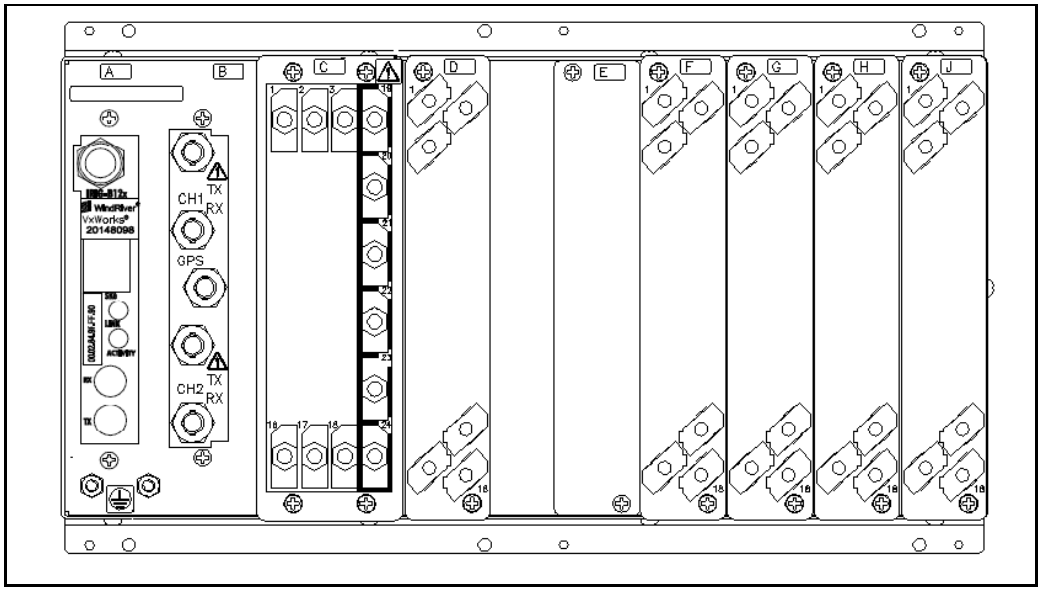

Figure 2 P543 relay rear view (60TE)

Note: Above diagram indicates example P543 60TE case layout for information purposes, exact layout will vary depending on model configuration and case size.

Refer to the wiring diagram in chapter *P54x/EN IN* for complete connection details.

1.3 Relay connection and power-up

Before powering-up the relay, confirm that the relay power supply voltage and nominal ac signal magnitudes are appropriate for your application. The relay serial number, and the relay's current and voltage rating, power rating information can be viewed under the top hinged cover. The relay is available in the following auxiliary voltage versions and these are specified in the table below.

Nominal ranges	Operative dc range	Operative ac range
24 - 48 V dc	19 to 65 V	-
48 - 110 V dc (40 - 100 V ac rms) **	37 to 150 V	32 to 110 V
110 - 250 V dc (100 - 240 V ac rms) **	87 to 300 V	80 to 265 V

** rated for ac or dc operation

Note: The label does not specify the logic input ratings.

The P54x relay is fitted with universal opto isolated logic inputs that can be programmed for the nominal battery voltage of the circuit of which they are a part. See 'Universal Opto input' in the Firmware chapter for more information on logic input specifications.

Note: The opto inputs have a maximum input voltage rating of 300 V dc at any setting.

Once the ratings have been verified for the application, connect external power capable of delivering the power requirements specified on the label to perform the relay familiarization procedures. Figure 2 indicates the location of the power supply terminals but please refer to the wiring diagrams in the Installation section for complete installation details ensuring that the correct polarities are observed in the case of dc supply.

1.4 Introduction to the user interfaces and settings options

The relay has three user interfaces:

- The front panel user interface via the LCD and keypad
- The front port which supports Courier communication
- The rear port which supports K-Bus or IEC 60870-5-103 or DNP3.0 or IEC 61850 + Courier via rear EIA(RS)485 port or IEC 61850 + IEC 60870-5-103 via rear EIA(RS)485 port. The protocol for the rear port must be specified when the relay is ordered

	Keypad/ LCD	Courier	IEC 61850	IEC870-5-103	DNP3.0
Display & modification of all settings	•	•			
Digital I/O signal status	•	•	•	•	•
Display/extraction of measurements	•	•	•	•	•
Display/extraction of fault records	•	•		•	•
Extraction of disturbance records		•	•	•	
Programmable scheme logic settings		•			
Reset of fault & alarm records	•	•		•	•
Clear event & fault records	•	•			•
Time synchronization		•	•	•	•
Control commands	•	•		•	•

Table 1 Measurement information and relay settings that can be accessed from the three interfaces

GS

1.5 Menu structure

The relay's menu is arranged in a table. Each setting in the menu is known as a cell, and each cell in the menu may be accessed using a row and column address. The settings are arranged so that each column contains related settings, for example all of the disturbance recorder settings are in the same column. As shown in Figure 3, the top row of each column contains the heading that describes the setting in that column. You can only move between the columns of the menu at the column heading level. For a complete list of all of the menu settings see the Settings chapter *P54x/EN ST* and the Relay Menu Database document *P54x/EN MD*.

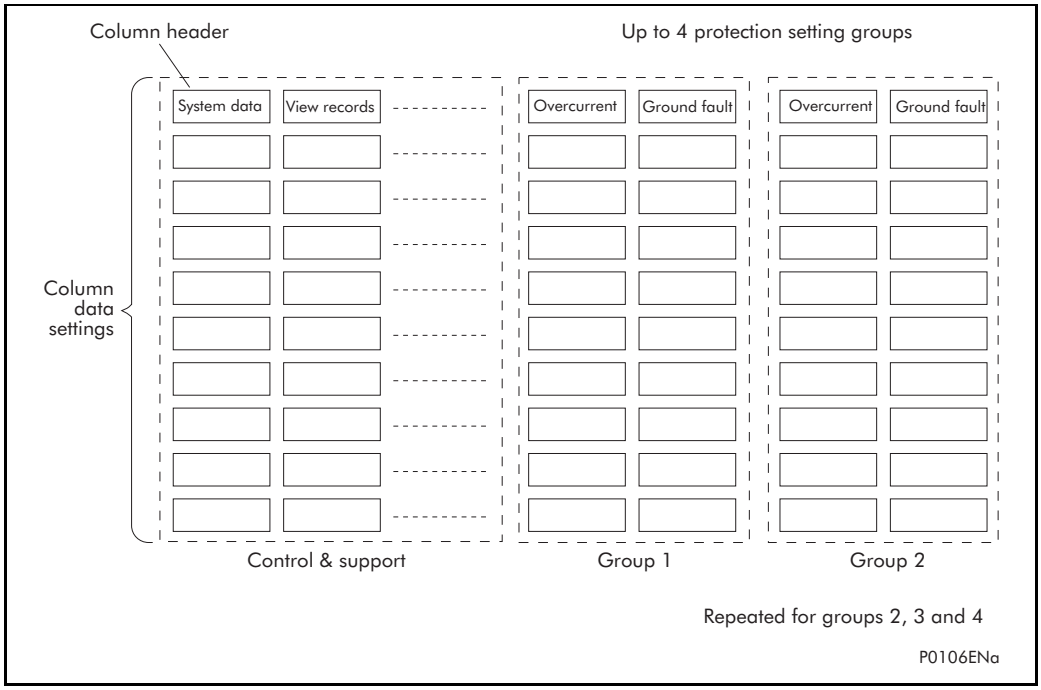

Figure 3 Menu structure

The settings in the menu are in three categories: Protection settings, disturbance recorder settings, or control and support (C&S) settings.

New control and support settings are stored and used by the relay immediately after they are entered. New Group settings or disturbance recorder settings are stored in a temporary 'scratchpad'. Once the new settings have been confirmed, the relay activates all the new settings together. This provides extra security so that several setting changes made in the Group settings all take effect at the same time.

1.5.1 Protection settings

The protection settings include the following items:

- Protection element settings
- Scheme logic settings

There are four groups of protection settings, with each group containing the same setting cells. One group of protection settings is selected as the active group, and is used by the protection elements.

1.5.2 Disturbance recorder settings

The disturbance recorder settings include the record duration and trigger position, selection of analog and digital signals to record, and the signal sources that trigger the recording.

1.5.3 Control and support settings

The control and support settings include:

- Relay configuration settings
- VT ratio settings
- Reset LEDs
- Active protection setting group
- Password & language settings

GS

- Communications settings
- Measurement settings
- Event & fault record settings
- User interface settings
- Commissioning settings

1.6 Password protection

The menu structure contains three levels of access. The level of access that is enabled determines which of the relay's settings can be changed and is controlled by entry of two different passwords. The levels of access are summarized in Table 2.

Access level	Operations enabled
Level 0 No password required	Read access to all settings, alarms, event records and fault records
Level 1 Password 1 or 2 required	As level 0 plus: Control commands, e.g. Circuit breaker open/close. Reset of fault and alarm conditions. Reset LEDs. Clearing of event and fault records.
Level 2 Password 2 required	As level 1 plus: All other settings

Table 2

Each of the two passwords are 4 characters of upper case text. The factory default for both passwords is AAAA. Each password is user-changeable once it has been correctly entered.

To enter a password, either use the prompt when a setting change is attempted, or from the menu select **System data** > **Password**. The access level is independently enabled for each interface, therefore if level 2 access is enabled for the rear communication port, the front panel access remains at level 0 unless the relevant password is entered at the front panel.

The access level, enabled by the password, times out independently for each interface after a period of inactivity and reverts to the default level. If the passwords are lost, contact Schneider Electric with the relay's serial number and an emergency password can be supplied. To find the current level of access enabled for an interface, select **System data** > **Access level**. The access level for the front panel User Interface (UI) is one of the default display options.

The relay is supplied with a default access level of 2, such that no password is required to change any of the relay settings. It is also possible to set the default menu access level to either level 0 or level 1, preventing write access to the relay settings without the correct password. The default menu access level is set in **System data** > **Password control.**

Note: That this setting can only be changed when level 2 access is enabled.

1.7 Relay configuration

The relay is a multi-function device that supports numerous different protection, control and communication features. In order to simplify the setting of the relay, there is a configuration settings column which can be used to enable or disable many of the functions of the relay. The settings associated with any function that is disabled are made invisible, i.e. they are not shown in the menu. To disable a function change the relevant cell in the **Configuration** column from **Enabled** to **Disabled**.

The configuration column controls which of the four protection settings groups is selected as active through the **Active settings** cell. A protection setting group can also be disabled in the configuration column, provided it is not the present active group. Similarly, a disabled setting group cannot be set as the active group.

GS

1.8 Front panel user interface (keypad and LCD)

When the keypad is exposed it provides full access to the menu options of the relay, with the information displayed on the LCD.

The ⟨, ⟩, ⌃ and ⌄ keys are used for menu navigation and setting value changes. These keys have an auto-repeat function if any of them are held continually. This can speed up both setting value changes and menu navigation; the longer the key is held pressed, the faster the rate of change or movement.

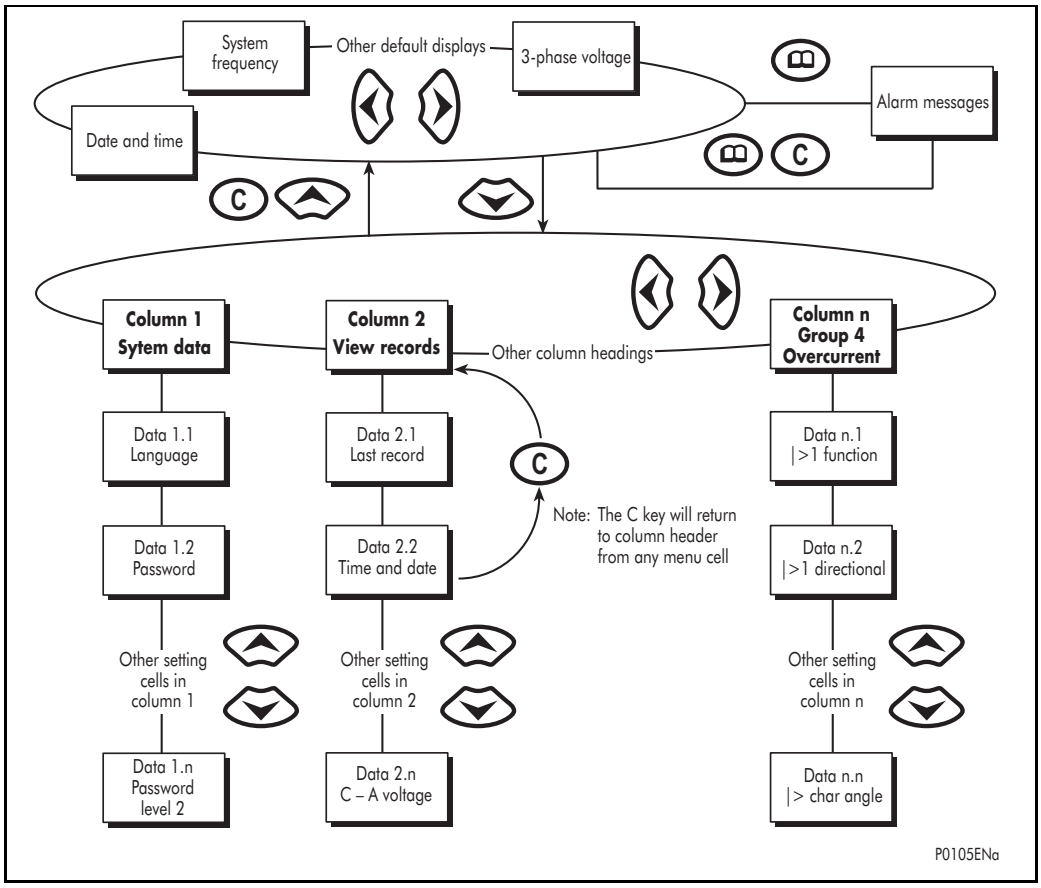

Figure 4 Front panel user interface

1.8.1 Default display and menu time-out

The front panel menu has a default display, the contents of which can be selected from the following options in the ‘default display’ cell of the ‘Measure’t setup’ column:

- Date and time
- Relay description (user defined)
- Plant reference (user defined)
- System frequency
- 3 phase voltage
- Access level

From the default display it is also possible to view the other default display options using the ⟨ and ⟩ keys. If there is no keypad activity for the 15 minute timeout period, the default display will revert to that selected by the setting and the LCD backlight will turn off. If this happens any setting changes that have not been confirmed will be lost and the original setting values maintained.

Whenever there is an uncleared alarm present in the relay (e.g. fault record, protection alarm, control alarm etc.) the default display will be replaced by:

Alarms/Faults Present

Entry to the menu structure of the relay is made from the default display and is not affected if the display is showing the **Alarms/Faults present** message.

1.8.2 Navigating menu and browsing the settings

Use the four arrow keys to browse the menu, following the structure shown in Figure 5.

1. Starting at the default display, press the key to show the first column heading.
2. Use the and keys to select the required column heading.
3. Use the and keys to view the setting data in the column.
4. To return to the column header, either hold the key down or press the clear key once. It is only possible to move across columns at the column heading level.
5. To return to the default display, press the key or the clear key from any of the column headings. If you use the auto-repeat function of the key, you cannot go straight to the default display from one of the column cells because the auto-repeat stops at the column heading.

Press the key again to go to the default display.

GS

1.8.3 Navigating the hotkey menu

1. To access the hotkey menu from the default display, press the key directly below the **HOTKEY** text on the LCD.
2. Once in the hotkey menu, use the and keys to scroll between the available options, then use the hotkeys to control the function currently displayed.

   If neither the or keys are pressed within 20 seconds of entering a hotkey sub menu, the relay reverts to the default display.
3. Press the clear key to return to the default menu from any page of the hotkey menu.

The layout of a typical page of the hotkey menu is as follows:

- The top line shows the contents of the previous and next cells for easy menu navigation
- The center line shows the function
- The bottom line shows the options assigned to the direct access keys

The functions available in the hotkey menu are listed below:

1.8.3.1 Setting group selection

To select the setting group, scroll through the available setting groups using **NXT GRP**, or press **SELECT** to select the setting group that is currently displayed.

When you press **SELECT**, the current setting group appears for 2 seconds, then the **NXT GRP** or **SELECT** options appear again.

To exit the sub menu, use the left and right arrow keys. For more information see “Changing setting group” in the Operation chapter (*P54x/EN OP*).

GS

1.8.3.2 Control inputs - user assignable functions

Use the **CTRL I/P CONFIG** column to configure the number of **USR ASS** shown in the hotkey menu. To SET/RESET the chosen inputs, use the **HOTKEY** menu.

For more information refer to the “Control Inputs” section in the Operation chapter (*P54x/EN OP*).

1.8.3.3 CB control

The CB control functionality varies from one Px40 relay to another. For a detailed description of the CB control via the hotkey menu refer to the “Circuit breaker control” section of the Operation chapter (*P54x/EN OP*).

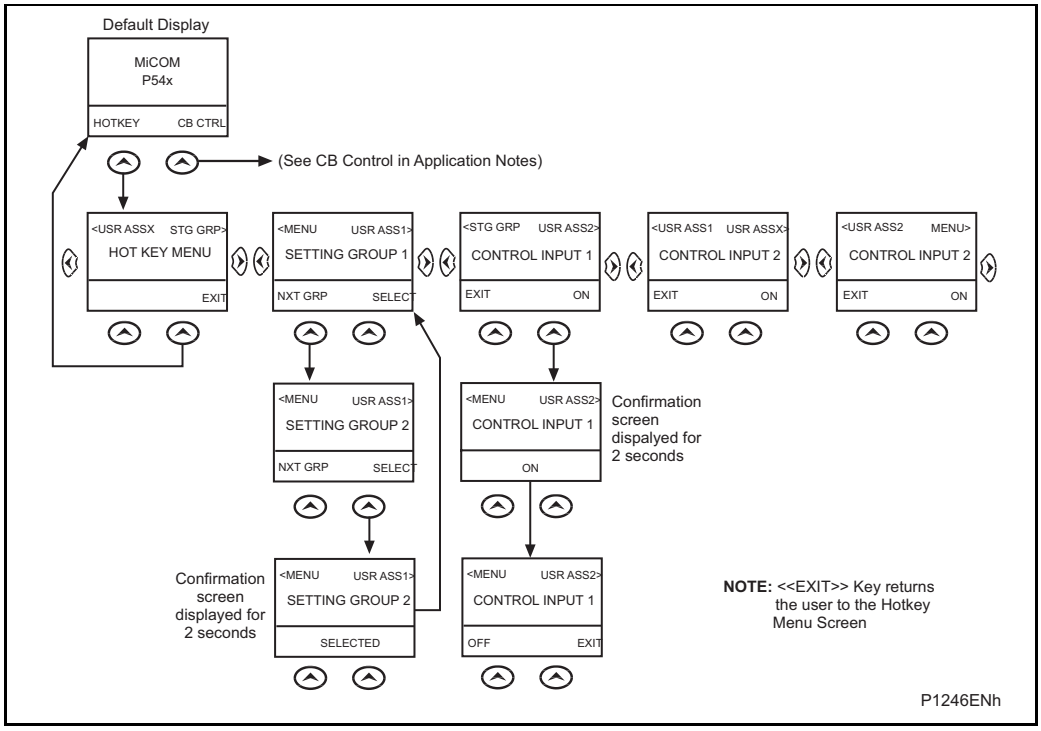

Figure 5 Hotkey menu navigation

1.8.4 Password entry

1. When a password is required to edit a setting, an Enter password prompt appears.

```
Enter password
**** Level 2
```

Note: The password required to edit the setting is the prompt as shown above.

2. A flashing cursor shows which character field of the password can be changed. Press the ⌃ and ⌄ keys to change each character between A and Z.

3. Use the ‹ and › keys to move between the character fields of the password. Press the enter key ↵ to confirm the password.

If an incorrect password is entered, the display reverts to **Enter password**. A message then appears indicating that the password is correct and if so what level of access has been unlocked. If this level is sufficient to edit the selected setting, the display returns to the setting page to allow the edit to continue. If the correct level of password has not been entered, the password prompt page appears again

4. To escape from this prompt press the clear key C. Alternatively, enter the password using **System data** > **Password**.
If the keypad is inactive for 15 minutes, the password protection of the front panel user interface reverts to the default access level.

5. To manually reset the password protection to the default level, select **System data** > **Password**, then press the clear key instead of entering a password.

1.8.5 Reading and clearing of alarm messages and fault records

1. To view the alarm messages, press the read key 📖. When all alarms have been viewed but not cleared, the alarm LED change from flashing to constantly ON and the latest fault record appears (if there is one).

2. Scroll through the pages of the latest fault record, using the ı key. When all pages of the fault record have been viewed, the following prompt appears.

```
Press clear to
reset alarms
```

3. To clear all alarm messages, press C. To return to the display showing alarms or faults present, and leave the alarms uncleared, press 📖.

4. Depending on the password configuration settings, you may need to enter a password before the alarm messages can be cleared. See *section 1.6.*

5. When all alarms are cleared, the yellow alarm LED switches OFF; also the red trip LED switches OFF if it was switched ON after a trip.

6. To speed up the procedure, enter the alarm viewer using the ı key, then press the key. This goes straight to the fault record display. Press again to move straight to the alarm reset prompt, then press again to clear all alarms.

GS

1.8.6 Setting changes

1. To change the value of a setting, go to the relevant cell in the menu, then press the enter key to change the cell value. A flashing cursor on the LCD shows the value can be changed. If a password is required to edit the cell value, a password prompt appears .
2. To change the setting value, press the or keys. If the setting to be changed is a binary value or a text string, select the required bit or character to be changed using the and keys.
3. Press to confirm the new setting value or the clear key to discard it. The new setting is automatically discarded if it is not confirmed in 15 seconds.
4. For group settings and disturbance recorder settings, the changes must be confirmed before they are used by the relay.

To do this, when all required changes have been entered, return to the column heading level and press the key. Before returning to the default display the following prompt appears.

GS

Update settings? Enter or clear

5. Press to accept the new settings or press to discard the new settings.

Note: If the menu time-out occurs before the setting changes have been confirmed, the setting values are also discarded.

Control and support settings will be updated immediately after they are entered, without the 'Update settings?' prompt.

1.9 Front communication port user interface

The front communication port is provided by a 9-pin female D-type connector located under the bottom hinged cover. It provides EIA(RS)232 serial data communication and is intended for use with a PC locally to the relay (up to 15 m distance) as shown in Figure 6. This port supports the Courier communication protocol only. Courier is the communication language developed by Schneider Electric to allow communication with its range of protection relays. The front port is particularly designed for use with the relay settings program MiCOM S1 Studio which runs on Windows™ 2000 or XP.

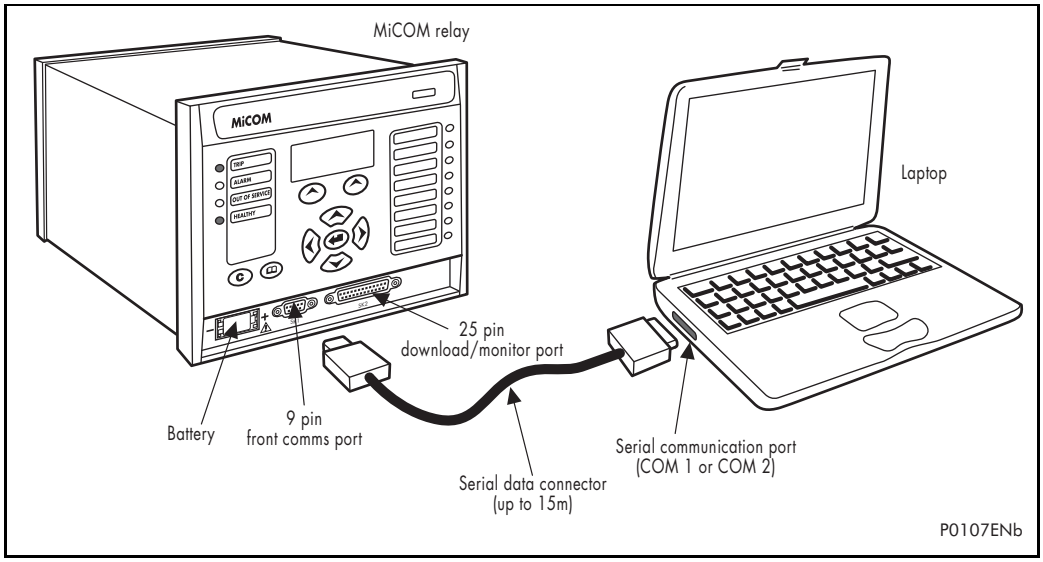

Figure 6 Front port connection

The relay is a Data Communication Equipment (DCE) device. Therefore the pin connections of the relay's 9-pin front port are as follows:

Pin number	Description
2	Tx Transmit data
3	Rx Receive data
5	0 V Zero volts common

None of the other pins are connected in the relay. The relay should be connected to the serial port of a PC, usually called COM1 or COM2. PCs are normally Data Terminal Equipment (DTE) devices which have a serial port pin connection as below (if in doubt check your PC manual):

Pin number	25-way	9-way	Description
2	3	2	x Receive data
3	2	3	Tx Transmit data
5	7	5	0 V Zero volts common

For successful data communication, the Tx pin on the relay must be connected to the Rx pin on the PC, and the Rx pin on the relay must be connected to the Tx pin on the PC, as shown in Figure 7. Therefore, providing that the PC is a DTE with pin connections as given above, a 'straight through' serial connector is required, i.e. one that connects pin 2 to pin 2, pin 3 to pin 3, and pin 5 to pin 5.

Note: A common cause of difficulty with serial data communication is connecting Tx to Tx and Rx to Rx. This could happen if a 'cross-over' serial connector is used, i.e. one that connects pin 2 to pin 3, and pin 3 to pin 2, or if the PC has the same pin configuration as the relay.

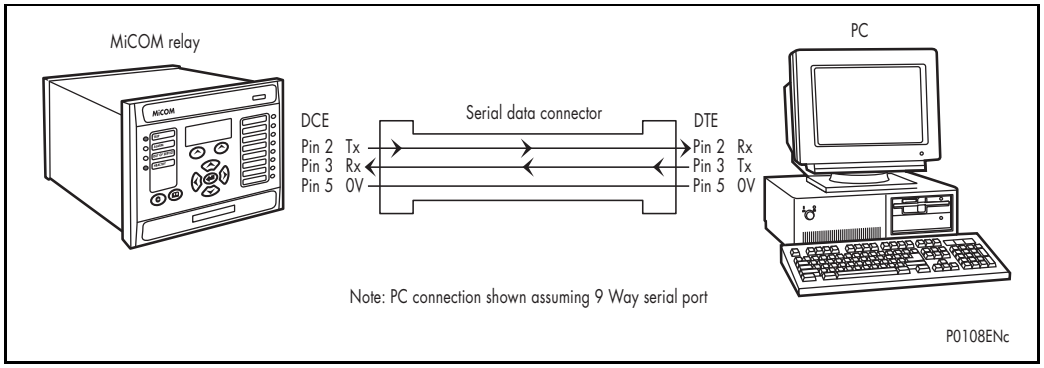

Figure 7 PC - relay signal connection

GS

Having made the physical connection from the relay to the PC, the PC's communication settings must be configured to match those of the relay. The relay's communication settings for the front port are fixed as shown in the table below:

Protocol	Courier
Baud rate	19,200 bits/s
Courier address	1
Message format	11 bit - 1 start bit, 8 data bits, 1 parity bit (even parity), 1 stop bit

The inactivity timer for the front port is set at 15 minutes. This controls how long the relay will maintain its level of password access on the front port. If no messages are received on the front port for 15 minutes then any password access level that has been enabled will be revoked.

1.9.1 Front courier port

The front EIA(RS)232[1] 9 pin port supports the Courier protocol for one to one communication. It is designed for use during installation and commissioning/maintenance and is not suitable for permanent connection. Since this interface will not be used to link the relay to a substation communication system, some of the features of Courier are not implemented. These are as follows:

Automatic Extraction of Event Records:

- Courier Status byte does not support the Event flag
- Send Event/Accept Event commands are not implemented

Automatic Extraction of Disturbance Records:

- Courier Status byte does not support the Disturbance flag

Busy Response Layer:

- Courier Status byte does not support the Busy flag, the only response to a request will be the final data

Fixed Address:

- The address of the front courier port is always 1, the Change Device address command is not supported.

Fixed Baud Rate:

- 19200 bps

Note: Although automatic extraction of event and disturbance records is not supported it is possible to manually access this data via the front port.

[1] This port is actually compliant to EIA(RS)574; the 9-pin version of EIA(RS)232, see www.tiaonline.org.

1.10 MiCOM S1 Studio relay communications basics

The EIA(RS)232 front communication port is intended for use with the relay settings program MiCOM S1 Studio. This program runs on Windows™ 2000, XP or Vista, and is the universal MiCOM relay Support Software used for direct access to all stored data in any MiCOM relay.

MiCOM S1 Studio provides full access to:

- MiCOM Px10, Px20, Px30, Px40, Modulex series, K series, L series relays
- MiCOM Mx20 measurements units

1.10.1 PC requirements

To run MiCOM S1 Studio on a PC, the following requirements are advised.

Minimum

- 1 GHz processor
- 256 MB RAM
- Windows™ 2000
- Resolution 800 x 600 x 256 colors
- 1 GB free hard disk space

Recommended

- 2 GHz processor
- 1 GB RAM
- Windows™ XP
- Resolution 1024 x 768
- 5 GB free hard disk space

Microsoft Windows™ Vista

- 2 GHz processor
- 1 GB RAM
- 5 GB free hard disk space
- MiCOM S1 Studio must be started with Administrator rights

1.10.2 Connecting to the P54x relay using MiCOM S1 Studio

This section is intended as a quick start guide to using MiCOM S1 Studio and assumes you have a copy installed on your PC. See the ***MiCOM S1 Studio program online help*** for more detailed information.

1. Make sure the EIA(RS)232 serial cable is properly connected between the port on the front panel of the relay and the PC. See section 1.9.
2. To start Micom S1 Studio, select **Programs** > then navigate through to > **MiCOM S1 Studio** > **MiCOM S1 Studio**.
3. Click the **Quick Connect** tab and select **Create a New System**.
4. Check the **Path to System file** is correct, then enter the name of the system in the **Name** field. If you need to add a brief description of the system, use the **Comment** field.
5. Click **OK**.

6. Select the device type.
7. Select the communications port.
8. Once connected, select the language for the settings file, the device name, then click **Finish**. The configuration is updated.
9. In the **Studio Explorer** window, select **Device** > **Supervise Device…** to control the relay directly.

1.10.3 Off-line use of MiCOM S1 Studio

Micom S1 Studio can also be used as an off-line tool to prepare settings, without access to the relay.

1. If creating a new system, in the Studio Explorer, select **create new** system. Then right-click the new system and select **New substation**.
2. Right-click the new substation and select **New voltage level**.
3. Then right-click the new voltage level and select **New bay**.
4. Then right-click the new bay and select **New device**.
   You can add a device at any level, whether it is a system, substation, voltage or bay.
5. Select a device type from the list, then enter the relay type, such as P841. Click **Next**.
6. Enter the full model number and click **Next**.
7. Select the **Language** and **Model**, then click **Next**.
8. Enter a unique device name, then click **Finish**.
9. Right-click the **Settings** folder and select **New File**. A default file **000** is added.
10. Right-click file **000** and select click **Open**. You can then edit the settings. See the *MiCOM S1 Studio program online help* for more information.

ST

SETTINGS

Date:	**16th March 2009**
Hardware suffix:	**K**
Software version:	**45 (P543/4/5/6 without Distance)** **55 (P543/4/5/6 with Distance)**
Connection diagrams:	**10P54302 (SH 1 to 2)** **10P54303 (SH 1 to 2)** **10P54400** **10P54404 (SH 1 to 2)** **10P54405 (SH 1 to 2)** **10P54502 (SH 1 to 2)** **10P54503 (SH 1 to 2)** **10P54600** **10P54604 (SH 1 to 2)** **10P54605 (SH 1 to 2)** **10P54606 (SH 1 to 2)**

ST

CONTENTS

(ST) 4-

1. SETTINGS

The MiCOM P54x must be configured to the system and application by means of appropriate settings. The sequence in which the settings are listed and described in this chapter will be the protection setting, control and configuration settings and the disturbance recorder settings. The relay is supplied with a factory-set configuration of default settings.

1.1 Relay settings configuration

The relay is a multi-function device that supports numerous different protection, control and communication features. In order to simplify the setting of the relay, there is a configuration settings column which can be used to enable or disable many of the functions of the relay. The settings associated with any function that is disabled are made invisible; i.e. they are not shown in the menu. To disable a function change the relevant cell in the 'Configuration' column from 'Enabled' to 'Disabled'.

The configuration column controls which of the four protection settings groups is selected as active through the 'Active settings' cell. A protection setting group can also be disabled in the configuration column, provided it is not the present active group. Similarly, a disabled setting group cannot be set as the active group.

ST

The column also allows all of the setting values in one group of protection settings to be copied to another group.

To do this firstly set the 'Copy from' cell to the protection setting group to be copied, and then set the 'copy to' cell to the protection group where the copy is to be placed. The copied settings are initially placed in the temporary scratchpad, and will only be used by the relay following confirmation.

Menu text	Default setting	Available settings
Restore Defaults	No Operation	No Operation All Settings Setting Group 1 Setting Group 2 Setting Group 3 Setting Group 4
Setting to restore a setting group to factory default settings. To restore the default values to the settings in any Group settings, set the 'restore defaults' cell to the relevant Group number. Alternatively it is possible to set the 'restore defaults' cell to 'all settings' to restore the default values to all of the IED's settings, not just the Group settings. The default settings will initially be placed in the scratchpad and will only be used by the relay after they have been confirmed by the user. **Note:** Restoring defaults to all settings includes the rear communication port settings, which may result in communication via the rear port being disrupted if the new (default) settings do not match those of the master station.		
Setting Group	Select via Menu	Select via Menu Select via Optos
Allows setting group changes to be initiated via Opto Input or via Menu.		
Active Settings	Group 1	Group 1, Group 2, Group 3, Group 4
Selects the active setting group.		
Save Changes	No Operation	No Operation, Save, Abort
Saves all relay settings.		
Copy from	Group 1	Group 1, 2, 3 or 4
Allows displayed settings to be copied from a selected setting group.		

ST

Menu text	Default setting	Available settings
Copy to	No Operation	No Operation Group 1, 2, 3 or 4
Allows displayed settings to be copied to a selected setting group (ready to paste).		
Setting Group 1	Enabled	Enabled or Disabled
If the setting group is disabled from the configuration, then all associated settings and signals are hidden, with the exception of this setting (paste).		
Setting Group 2 (as above)	Disabled	Enabled or Disabled
Setting Group 3 (as above)	Disabled	Enabled or Disabled
Setting Group 4 (as above)	Disabled	Enabled or Disabled
Distance	Enabled	Enabled or Disabled
Only in models with Distance option. To enable (activate) or disable (turn off) the Distance Protection: ANSI 21P/21G.		
Directional E/F	Enabled	Enabled or Disabled
Only in models with Distance option. To enable (activate) or disable (turn off) the Directional Earth Fault (DEF) Protection used in a pilot aided scheme: ANSI 67N. This protection is independent from back up Earth fault protection described below.		
Phase Diff	Enabled	Enabled or Disabled
To enable (activate) or disable (turn off) the Differential Protection. To get the differential protection fully active, it is necessary also to enable the differential protection in the group. Note that Phase Diff setting and InterMiCOM^{64} Fiber setting are mutually exclusive as with Phase Diff enabled, the digital message exchanged has the structure of the differential message (i.e. currents are sent to the remote end, etc) and with InterMiCOM^{64} Fiber the digital message exchanged has the structure and properties of the InterMiCOM^{64} Fiber.		
Overcurrent	Enabled	Enabled or Disabled
To enable (activate) or disable (turn off) the Phase Overcurrent Protection function. I> stages: ANSI 50/51/67P.		
Neg. Sequence O/C	Disabled	Enabled or Disabled
To enable (activate) or disable (turn off) the Negative Sequence Overcurrent Protection function. I2> stages: ANSI 46/67.		
Broken Conductor	Disabled	Enabled or Disabled
To enable (activate) or disable (turn off) the Broken Conductor function. I2/I1> stage: ANSI 46BC.		
Earth Fault	Disabled	Enabled or Disabled
To enable (activate) or disable (turn off) the back up Earth Fault Protection function. IN >stages: ANSI 50/51/67N.		
Sensitive E/F	Disabled	Enabled or Disabled
To enable (activate) or disable (turn off) the Sensitive Earth Fault Protection function. ISEF >stages: ANSI 50/51/67N.		
Residual O/V NVD	Disabled	Enabled or Disabled
To enable (activate) or disable (turn off) the Residual Overvoltage Protection function. VN>stages: ANSI 59N.		
Thermal Overload	Disabled	Enabled or Disabled
To enable (activate) or disable (turn off) the Thermal Overload Protection function. ANSI 49.		

Menu text	Default setting	Available settings
PowerSwing Block	Enabled	Enabled or Disabled
Only in models with Distance option. To enable (activate) or disable (turn off) the power swing blocking/out of step: ANSI 68/78.		
Volt Protection	Disabled	Enabled or Disabled
To enable (activate) or disable (turn off) the Voltage Protection (under/overvoltage) function. V<, V> stages: ANSI 27/59.		
Freq. Protection	Disabled	Enabled or Disabled
To enable (activate) or disable (turn off) the Frequency Protection (under/over frequency) function. F<, F> stages: ANSI 81O/U.		
df/dt Protection	Disabled	Enabled or Disabled
To enable (activate) or disable (turn off) the Rate of change of Frequency Protection function. df/dt> stages: ANSI 81R.		
CB Fail	Disabled	Enabled or Disabled
To enable (activate) or disable (turn off) the Circuit Breaker Fail Protection function. ANSI 50BF.		
Supervision	Enabled	Enabled or Disabled
To enable (activate) or disable (turn off) the Supervision (VTS & CTS) functions. ANSI VTS/CTS.		
System Checks	Disabled	Enabled or Disabled
To enable (activate) or disable (turn off) the System Checks (Check Sync. and Voltage Monitor) function: ANSI 25.		
Auto-reclose	Disabled	Enabled or Disabled
To enable (activate) or disable (turn off) the Auto-reclose function. ANSI 79.		
Input Labels	Visible	Invisible or Visible
Sets the Input Labels menu visible further on in the relay settings menu.		
Output Labels	Visible	Invisible or Visible
Sets the Output Labels menu visible further on in the relay settings menu.		
CT & VT Ratios	Visible	Invisible or Visible
Sets the Current & Voltage Transformer Ratios menu visible further on in the relay settings menu.		
Record Control	Invisible	Invisible or Visible
Sets the Record Control menu visible further on in the relay settings menu.		
Disturb. Recorder	Invisible	Invisible or Visible
Sets the Disturbance Recorder menu visible further on in the relay settings menu.		
Measure't. Set-up	Invisible	Invisible or Visible
Sets the Measurement Setup menu visible further on in the relay settings menu.		
Comms. Settings	Visible	Invisible or Visible
Sets the Communications Settings menu visible further on in the relay settings menu. These are the settings associated with the 2nd rear communications ports.		

Menu text	Default setting	Available settings
Commission Tests	Visible	Invisible or Visible
Sets the Commissioning Tests menu visible further on in the relay settings menu.		
Setting Values	Primary	Primary or Secondary
This affects all protection settings that are dependent upon CT and VT ratios. All subsequent settings input must be based in terms of this reference.		
Control Inputs	Visible	Invisible or Visible
Activates the Control Input status and operation menu further on in the relay setting menu.		
Ctrl I/P Config.	Visible	Invisible or Visible
Sets the Control Input Configuration menu visible further on in the relay setting menu.		
Ctrl I/P Labels	Visible	Invisible or Visible
Sets the Control Input Labels menu visible further on in the relay setting menu.		
Direct Access	Enabled	Enabled/Disabled/Hotkey only/CB Cntrl. only
Defines what CB control direct access is allowed. Enabled implies control via menu, hotkeys etc.		
InterMiCOM^{64} Fiber	Disabled	Enabled or Disabled
To enable (activate) or disable (turn off) InterMiCOM64 (integrated 56/64kbit/s teleprotection). Note that Phase Diff setting and InterMiCOM64 Fiber setting are mutually exclusive as with Phase Diff enabled, the digital message exchanged has the structure of the differential message (i.e. currents are sent to the remote end, etc) and with InterMiCOM64 Fiber the digital message exchanged has the structure and properties of the InterMiCOM64 Fiber.		
Function Key	Visible	Invisible or Visible
Sets the Function Key menu visible further on in the relay setting menu.		
LCD Contrast	11	0…31
Sets the LCD contrast.		

ST

1.1.1 Default settings restore

To restore the default values to the settings in any protection settings group, set the ‘restore defaults’ cell to the relevant group number. Alternatively it is possible to set the ‘restore defaults’ cell to ‘all settings’ to restore the default values to all of the relay’s settings, not just the protection groups’ settings. The default settings will initially be placed in the scratchpad and will only be used by the relay after they have been confirmed. Note that restoring defaults to all settings includes the rear communication port settings, which may result in communication via the rear port being disrupted if the new (default) settings do not match those of the master station.

1.2 Protection communication configuration

The column **PROT COMMS/ IM64** is used to set up all the differential protection communications parameters required by differential protection and also the parameters required for teleprotection when Differential function is disabled and the relay is working as a Distance relay using InterMiCOM^{64} for teleprotection purposes.

InterMiCOM^{64} is a fiber-optic based teleprotection scheme, described in detail in the Operation and Application chapters of this service manual.

In the settings listed here, Channel1 and Channel2 refer to the communications channels, and are associated with configuring the communications ports fitted to the co-processor board.

Each setting below that refers to Channel 2 is associated with the communications setting of the second communications channel (where fitted) and is visible only when 3 Terminal or Dual redundant teleprotection configuration is set.

Note: InterMiCOM64 provides 2 groups of 8 InterMiCOM64 commands. These are referenced as Channel 1 and Channel 2. They have a subtly different meaning and should not be confused with communications channels 1 and 2.

InterMiCOM^{64} input and output mapping has to be done in the Programmable Scheme Logic (PSL).

Menu text	Default setting	Setting range		Step size
		Min.	Max.	
PROT COMMS/IM64				
Scheme Setup	2 Terminal	2 Terminal, Dual Redundant, or 3 Terminal		
Settings to determine how many relay ends are connected in the differential zone or how many relays are connected to the teleprotection scheme for the protected line, with two or three ends possible. For a plain two terminal line, there is an additional option to use dual communication channels, to implement redundancy (i.e. employ a parallel “hot-standby” path).				
Address	0-0	0-0, 1-A…20-A, 1-B….20-B		
Setting for the unique relay address that is encoded in the Differential message and in the InterMiCOM^{64} sent message. The aim of setting the address is to establish pairs of relays which will only communicate with each other. Should an inadvertent fiber/MUX misrouting or spurious loopback occur, an error will be logged, and the erroneous received data will be rejected. As an example, in a 2 ended scheme the following address setting would be correct: Local relay: 1-A Remote relay: 1-B Address 0-0 is a universal address, whereby any relay will be free to communicate with any other (equivalent to disabling of the unique addressing). When PROT COMMS/IM64 is set to loop back mode, the address 0-0 will replace any existing address in the relay.				
Address	0-0	0-0, 1-A…20-A, 1-B….20-B, 1-C…20-C		
In 3 terminal schemes, communicating groups of three relays may be configured.				
Comm Mode	Standard	Standard or IEEE C37.94		
Setting that defines the data format that will be transmitted on the fiber outputs from the relay. If the Multiplexer accepts direct fiber inputs according to IEEE C37.94, the ‘IEEE C37.94’ setting is selected. For a direct fiber link between relays, and where the MUX connection is in electrical format (G.703 or V.35 or X.21), the ‘Standard’ message format needs to be set. For a setting change to take effect, rebooting of the relay will be required. The Comm Mode setting applies to both channels.				
Baud Rate Ch 1	64kbits/s	56kbits/s or 64kbits/s		
Channel 1 data rate setting for signaling between ends. The setting will depend on the MUX electrical interface, set 64kbit/s for G.703 and X.21, or generally 56kbit/s for V.35. For direct fiber connection between relays, 64kbit/s will offer slightly faster data transmission. The setting is invisible when IEEE C37.94 Comm Mode is selected.				

ST

ST

Menu text	Default setting	Setting range		Step size
		Min.	Max.	
Baud Rate Ch 2	64kbits/s	56kbits/s or 64kbits/s		
As 'Baud Rate Ch1' cell.				
Clock Source Ch1	Internal	Internal or External		
Setting that defines which clock source is used to synchronize data transmissions over channel 1. The setting will depend on communications configuration and external clock source availability. If relays are connected direct fiber over channel 1, 'Internal' setting should be selected. If channel 1 is routed via a multiplexer, either setting may be required (see Application Notes).				
Clock Source Ch2	Internal	Internal or External		
Setting that matches the clock source being used for data synchronization over channel 2.				
Ch1 N*64kbits/s	1	Auto, 1, 2, 3, …..or 12		
Setting for channel 1 when connected to MUX. When set to 'Auto' P54x will configure itself to match the multiplexer. The setting is visible only when IEEE C37.94 Comm Mode is selected.				
Ch2 N*64kbits/s	1	Auto, 1, 2, 3, …..or 12		
Setting for channel 2 when connected to Mux. The setting is visible only when IEEE C37.94 Comm Mode is selected.				
Comm Delay Tol	0.00025 s	0.00025 s	0.001 s	0.00005 s
If successive calculated propagation times exceed this time delay setting, the relay will initiate a change in relay setting for a short time period ("Char Mod Time" setting) and will raise a Comm Delay Alarm.				
Comm Fail Timer	10 s	0.1 s	600 s	0.1 s
Time delay after which the 'Channel Fail Alarm' will be issued providing that no messages were received during the 'Channel Timeout' period or the 'Alarm Level' is exceeded.				
Comm Fail Mode	Ch 1 and 2 Fail	Ch 1 Failure/ Ch 2 Failure/ Ch 1 or Ch 2 Fail/ Ch 1 and Ch 2 Fail		
Fail mode setting that triggers the 'Channel Fail Alarm', providing that the Dual Redundancy or 3 ended scheme is set. Normally the alarm would be raised for any loss of an operational channel (logical **OR** combination). However, when relays in a 3 ended scheme are deliberately operated in Chain topology **AND** logic may be used, for indication when the scheme becomes finally inoperative, with no self-healing (signal rerouting) mode possible.				
GPS Sync	Disabled	Enabled or Disabled		
To enable (activate) or disable (turn off) the time alignment of current vectors via GPS.				
Char Mod Time	0.5 s	0	2 s	0.0001 s
Time delay during which the setting characteristic k1 is increased to 200% after successive calculated propagation delay time exceed the time delay setting **Comm Delay Tol**.				
Prop Delay Equal	No Operation	No operation or Restore CDiff		
If a P54x relay working with GPS sample synchronization loses GPS and there is a further switch in the protection communications network, the relay becomes Inhibited. If GPS become active again, the relay will automatically reset. But if not, the user can remove the inhibited condition by using this setting. This should only be performed if it can be guaranteed that the communication receiver and transmitter path delays are equal. The setting is invisible when GPS Sync mode is disabled.				

Menu text	Default setting	Setting range		Step size
		Min.	Max.	
Re-Configuration	Three Ended	Three Ended, Two Ended (R1&R2) , Two Ended (L&R2) or Two Ended (L&R1)		
This setting is to change the scheme from three ended scheme to two ended scheme or vice versa. An in deep explanation of relay performance for each case is given in chapter *P54x/EN OP*. The setting is invisible when 3 Terminal Scheme Setup is selected.				
Channel Timeout	0.1 s	0.1 s	10 s	0.1 s
A rolling time window beyond which any of the 8 IM signals that are set to 'Default' will be replaced by the corresponding 'IM_X Default Value' setting, providing that no valid message is received on that channel in the meantime. The 'Chnl Fail Alarm' timer will be also initiated. If only one channel is used, each out of 16 IM signals available that is set to 'Default' will convert to corresponding 'IM_X Default Value' If a Dual redundant or 3 ended scheme is selected, each out of 8 IM signals available that is set to 'Default' will convert to corresponding 'IM_X Default Value', but only for the affected channel.				
Alarm Level	25%	0%	100%	1%
Setting that is used to alarm for poor channel quality. If during a fixed 100 ms rolling window the number of invalid messages divided by the total number of messages that should be received (based upon the 'Baud Rate' setting) increase above the threshold, a 'Channel Fail Alarm' timer will be initiated.				
Prop Delay Stats	Enabled	Enabled or Disabled		
To enable (activate) or disable (turn off) the alarms of Maximum propagation delay time				
MaxCh 1 PropDelay	15 ms	1 ms	50 ms	1 ms
When the protection communications are enabled, the overall propagation delay divided by 2 is calculated and the maximum value is determined and displayed in Measurements 4 column. This value is displayed and compared against this setting. If the setting is exceeded, an alarm **MaxCh1 PropDelay** (DDB 1386) is raised.				
MaxCh 2 PropDelay	15 ms	1 ms	50 ms	1 ms
When the protection communications are enabled, the overall propagation delay divided by 2 is calculated and the maximum value is determined and displayed in Measurements 4 column. This value is displayed and compared against this setting. If the setting is exceeded, an alarm **MaxCh2 PropDelay** (DDB 1387) is raised.				
TxRx Delay Stats	Enabled	Enabled or Disabled		
To enable (activate) or disable (turn off) the alarms of absolute difference between the Transmission and Reception propagation delay. This setting is visible only in case that GPS Sync is Enabled.				
MaxCh1 Tx-RxTime	15 ms	1 ms	50 ms	1 ms
When the protection communications and GPS Sync are enabled, the absolute difference between the Transmission and Reception propagation delay is calculated and the maximum value is determined and displayed in Measurements 4 column. This value is displayed and compared against this setting. If the setting is exceeded, an alarm **MaxCh1 Tx-RxTime** (DDB 1388) is raised.				
MaxCh2 Tx-RxTime	15 ms	1 ms	50 ms	1 ms
When the protection communications and GPS Sync are enabled, the absolute difference between the Transmission and Reception propagation delay is calculated and the maximum value is determined and displayed in Measurements 4 column. This value is displayed and compared against this setting. If the setting is exceeded, an alarm **MaxCh2 Tx-RxTime** (DDB 1389) is raised.				

Menu text	Default setting	Setting range		Step size
		Min.	Max.	
GPS Fail Timer	0 s	0 s	9999 s	1 s
Time delay setting after which the 'GPS Alarm' – DDB 310 is asserted following a loss of GPS signal or initiation by the GPS transient fail alarm function when active(see below).				
GPS Trans Fail	Disabled	Enabled or Disabled		
To enable (activate) or disable (turn off) the transient GPS Fail alarm function.				
GPS Trans Count	1 s	1 s	100 s	1 s
Sets the count for the number of failed GPS signals which must be exceeded in the set 'GPS Trans Timer' window after which the 'GPS Fail Timer' is initiated.				
GPS Trans Timer	1 s	0 s	9999 s	1 s
Sets the rolling time window in which the 'GPS Trans Count' must be exceeded after which the 'GPS Fail Timer' is initiated.				
IM1 Cmd Type	Permissive	Direct or Permissive		
Setting that defines the operative mode of the received InterMiCOM_1 signal. When 'Direct' tripping is chosen, for security reasons 2 consecutive valid messages have to be received before a change in the signal status will be acknowledged. That will impose an additional 1-2 ms delay comparing to 'Permissive' mode. Set 'Direct' in Direct Transfer Tripping (Intertripping) applications. Set 'Permissive' to accommodate any Permissive or Blocking scheme.				
IM1 FallBackMode	Default	Default or Latching		
Setting that defines the status of IM1 signal in case of heavy noise and message synchronization being lost. If set to 'Latching' the last valid IM1 status will be maintained until the new valid message is received. If set to 'Default', the IM1 status, pre-defined by the user in 'IM1 Default Value' cell will be set. A new valid message will replace 'IM1 Default Value', once the channel recovers.				
IM1 Default Value	0	0	1	1
Setting that defines the IM1 fallback status.				
IM2 to IM8	Cell as for IM1 above			

Note: The IM1 – IM8 settings in the table above are applied the same to the 8 InterMiCOM^{64} commands grouped as Channel 1 as to the 8 InterMiCOM^{64} commands grouped as Channel 2. If IM1 Default Value is set to 0, then IM1 Channel 1, and IM1 Channel 2 will both default to 0.

1.3 Protection GROUP settings

The protection settings include all the following items that become active once enabled in the configuration column of the relay menu database:

- Protection element settings
- Programmable Scheme logic (PSL) that also includes InterMiCOM^{64} signals mapping
- Protection Schemes
- Auto-reclose and check synchronization settings
- Fault locator settings.

There are four groups of protection settings, with each group containing the same setting cells. One group of protection settings is selected as the active group, and is used by the protection elements. The settings for group 1 is shown. The settings are discussed in the same order in which they are displayed in the menu.

ST

1.3.1 Line parameters

The column **GROUP x LINE PARAMETERS** is used to enter the characteristics of the protected line or cable. These settings are used by the fault locator as the base data for input to the distance to fault algorithm, and also as the reference for all distance zones when the Distance set up is preferred in the 'Simple' setting mode. It also accommodates the system phase rotation (phase sequence) and defines the single or three pole tripping mode.

Menu text	Default setting	Setting range		Step size
		Min.	Max.	
Line Length (km)	100	0.01	1,000	0.01
Setting of the protected line/cable length in km. This setting is available if MEASURE'T SETUP column is selected as 'Visible' in the CONFIGURATION column and if 'Distance unit' in the MEASURE'T SETUP column is selected as 'kilometers'.				
Line Length (miles)	62.10	0.005	621	0.005/0.01
Setting of the protected line/cable length in miles. This setting is available if MEASURE'T SETUP column is selected as 'Visible' in the CONFIGURATION column and if 'Distance unit' in the MEASURE'T SETUP column is selected as 'miles'. Dual step size is provided, for cables/short lines up to 10 miles the step size is 0.005 miles, 0.01 miles otherwise.				
Line Impedance	10/In Ω	0.05/In Ω	500Ω÷ (In x percentage reach setting of furthest reaching zone)	0.01/In Ω
Setting for protected line/cable positive sequence impedance in either primary or secondary terms, depending on the **Setting Values** reference chosen in the CONFIGURATION column. The set value is used for Fault locator, and for all distance zone reaches calculation if 'Simple' setting mode under **GROUP x LINE PARAMETERS** is selected.				
Line Angle	70°	20°	90°	1°
Setting of the line angle (line positive sequence impedance angle).				
kZN Residual Comp	1	0	10	0.01
Setting of the residual compensation factor magnitude, used to extend the ground loop reach by a multiplication factor of (1+ kZN), is calculated as ratio: $\lvert kZN \rvert = (Z_0 - Z_1)/3Z_1$ where, Z_1 = positive sequence impedance for the protected line or cable. Z_0 = zero sequence impedance for the protected line or cable.				
kZN Residual Angle	0°	-180°	90°	1°
Setting of the residual compensation factor angle (in degrees) is calculated as: $\angle kZN = \angle (Z_0 - Z_1)/3Z_1$ where, Z_1 = positive sequence impedance for the protected line or cable. Z_0 = zero sequence impedance for the protected line or cable.				
Mutual Comp	Disabled	Enabled or Disabled		
To enable (activate) or disable (turn off) the Mutual compensation replica used in both, Distance and Fault locator ground fault loops.				

ST

ST

Menu text	Default setting	Setting range		Step size
		Min.	Max.	
kZm Mutual Set	1	0		10
Setting of the mutual compensation factor kZm magnitude is calculated as a ratio: $\lvert kZm \rvert = ZM_0/3Z_1$ where, ZM_0 = zero sequence mutual impedance for the protected line or cable. Z_1 = positive sequence impedance for the protected line or cable. Setting kZm is visible if 'Mutual Comp' is enabled.				
kZm Mutual Angle	0°	-180°	90°	1°
Setting of the mutual compensation angle (in degrees) is calculated as: $\angle kZm = \angle ZM_0/3Z_1$ Angle setting ∠kZm is visible if 'Mutual Comp' is enabled.				
Mutual Cut-off	0	2		0.01
Only in models with Distance option. Setting used to eliminate the mutual compensation replica in case when the ratio of neutral current of the parallel line to the neutral current of the protective line (I_{MUTUAL}/IN) exceeds the setting. This setting is visible only if 'Mutual Comp' is enabled.				
Phase Sequence	Standard ABC	Standard ABC, Reverse ACB		Phase Rotation
This setting is used to select whether the 3 phase quantities (V and I) are rotating in the standard ABC sequence, or whether the rotation is in reverse ACB order. The appropriate selection is required to ensure that all derived sequence components and faulted phase flagging/targeting are correct.				
CB1Tripping Mode	3 Pole	3 pole, 1 and 3 pole		Trip Mode
This setting is used to select the tripping mode. The selection **1 and 3 pole** allows single pole tripping for single phase to ground faults, whilst selection **3 pole** converts any trip command(s) to three pole tripping.				
CB2Tripping Mode	3 Pole	3 pole, 1 and 3 pole		Trip Mode
This setting is used to select the tripping mode. The selection **1 and 3 pole** allows single pole tripping for single phase to ground faults, whilst selection **3 pole** converts any trip command(s) to three pole tripping.				
Line Charging Y	2.00 mS	0.00 mS	10.00 mS	0.1 mS
Setting for protected lines' total susceptance in either primary or secondary terms, depending on the **Setting Values** reference chosen in the CONFIGURATION column. The set value is used to calculate the compensated overvoltage if 'V1>1 Cmp Funct' setting is enabled under **GROUP x VOLT PROTECTION**.				

1.3.2 Distance setup (only for models with distance option)

The column **GROUP x DISTANCE SETUP** is used to:

- Select the Distance setting mode (Simple or Advanced)
- Select the operating characteristic (Mho or Quad) for phase and ground measuring loops independently
- Enable or Disable each phase and ground zone independently
- Define the reach (in Ohms) for each phase and ground zone independently by simply setting the percentage required reach with reference to the line impedance (taken as the 100% reference basis)
- Other settings related to application of the "Basic" distance scheme

Menu text	Default setting	Setting range		Step size
		Min.	Max.	
Setting Mode	Simple	Simple or Advanced		Setting Mode
Setting to select setting mode for Distance protection, depending on type of application and user preferences. **'Simple' mode:** 'Simple' setting mode is the default setting mode, suitable for the majority of applications. Instead of entering distance zone impedance reaches in ohms, zone settings are simply entered in terms of percentage of the protected line data specified in the 'GROUP x LINE PARAMETERS/Line Impedance' setting. The setting assumes that the residual compensation factor is equal for all zones. The relay auto calculates the required reaches from the percentages. The calculated zone reaches are available for viewing but a user can not alter/change the value as long as 'Simple' mode setting remains active. **Advanced setting mode:** 'Advanced' setting mode allows individual distance ohmic reaches and residual compensation factors to be entered for each zone. When 'Advanced' mode is selected, all 'percentage' settings that are associated to 'Simple' setting mode in the column **GROUP x DISTANCE SETUP** will be hidden and the Distance zone settings need to be entered for each zone in the 'GROUP x DIST. ELEMENTS' column.				
PHASE DISTANCE				
Phase chars.	Mho	Disabled or Mho or Quad		21P char.
Setting to disable (turn off) phase distance protection or to set Mho or Quad operating characteristic: ANSI 21P. The chosen setting is applicable to all phase distance zones.				
Quad Resistance	Proportional	Common or Proportional		
Setting to define the mode of resistive reach coverage. If 'Common' mode is selected, all phase distance zones will have the equal resistive coverage. If 'Proportional' mode is selected, the zones will have resistive coverage according to the % reach set for the zone, multiplied by the 'Fault Resistance' R_{PH} setting. This setting is visible only when 'Simple' setting mode and quad characteristic are set.				
Fault Resistance	10/In Ω	0.05/In Ω	500/In Ω	0.01/In Ω
Setting used to specify the fault arc resistance that can be detected for faults between phases. The set value determines the right hand side of the quadrilaterals. This setting is visible only when 'Simple' setting mode and quad characteristic are set.				
Z1 Ph Status	Enabled	Enabled or Disabled or Enabled on CH Fail		
To enable (activate) or disable (turn off) or enable (only in the case that differential protection communication channel is lost) Z1 for phase faults. This setting is invisible if 'Phase Char.' is disabled.				
Z1 Phase Reach	80%	10%	1000%	10%
Setting entry as percentage of the line impedance that sets Zone 1 reach in ohms.				
Z2 Ph Status	Enabled	Enabled or Disabled or Enabled on CH Fail		
As per Z1, but applicable to Zone 2.				
Z2 Phase Reach	120%	10%	1000%	10%
Setting entry as percentage of the line impedance that sets Zone 2 reach in ohms.				

ST

ST

Menu text	Default setting	Setting range		Step size
		Min.	Max.	
Z3 Ph Status	Enabled	Enabled or Disabled or Enabled on CH Fail		
As per Z1, but applicable to Zone 3.				
Z3 Phase Reach	250%	10%	1000%	10%
Setting entry as percentage of the line impedance that sets Zone 3 forward reach in ohms.				
Z3 Ph Offset	Enabled	Enabled or Disabled or Enabled on CH Fail		
To enable (activate) or disable (turn off) or enable (only in the case that differential protection communication channel is lost) Zone 3 offset reach for phase faults. By default, Z3 Mho phase characteristic is offset (partly reverse directional), thus not memory/cross polarized. 'If Z3 Gnd Offset' is disabled, Z3 Mho characteristic becomes memory/cross polarized like all other zones.				
Z3 Rev Reach	10%	10%	1000%	1%
Setting entry as percentage of the line impedance that sets Zone 3 reverse reach in ohms.				
ZP Ph Status	Enabled	Enabled or Disabled or Enabled on CH Fail		
As per Z1, but applicable to Zone P.				
ZP Ph Dir.	Forward	Forward/ Reverse		
To directionalize Zone P forward or reverse.				
ZP Phase Reach	200%	10%	1000%	10%
Setting entry as percentage of the line impedance that sets Zone P forward or reverse reach in ohms.				
Z4 Ph Status	Enabled	Enabled or Disabled or Enabled on CH Fail		
As per Z1, but applicable to Zone 4.				
Z4 Phase Reach	150%	10%	1000%	10%
Setting entry as percentage of the line impedance that sets reverse Zone 4 reach in ohms.				
GROUND DISTANCE				
Ground Chars.	Mho	Disabled or Mho or Quad		21G char.
Setting to disable (turn off) ground distance protection or to set Mho or Quad operating characteristic: ANSI 21G. The chosen setting is applicable to all ground distance zones.				
Quad Resistance	Proportional	Common or Proportional		
Setting to define the mode of resistive reach coverage. If 'Common' mode is selected, all ground distance zones will have the equal resistive coverage. If 'Proportional' mode is selected, the zones will have resistive coverage according to the % reach set for the zone, multiplied by the 'Fault Resistance' R_G setting. This setting is visible only when 'Simple' setting mode and quad characteristic are set.				
Fault Resistance	10/In Ω	0.05/In Ω	500/In Ω	0.01/In Ω
Setting used to specify the fault arc resistance that can be detected for faults phase - ground. The set value determines the right hand side of the quadrilaterals. This setting is visible only when 'Simple' setting mode and quad characteristic are set.				

Menu text	Default setting	Setting range		Step size
		Min.	Max.	
Z1 Gnd Status	Enabled	Enabled or Disabled or Enabled on CH Fail		
To enable (activate) or disable (turn off) or enable (only in the case that differential protection communication channel is lost) Zone 1 for ground faults. This setting is invisible if 'Ground Char.' is disabled.				
Z1 Ground Reach	80%	10%	1000%	10%
Setting entry as percentage of the line impedance that sets Zone 1 reach in ohms.				
Z2 Gnd Status	Enabled	Enabled or Disabled or Enabled on CH Fail		
As per Z1, but applicable to Zone 2.				
Z2 Ground Reach	120%	10%	1000%	10%
Setting entry as percentage of the line impedance that sets Zone 2 reach in ohms.				
Z3 Gnd Status	Enabled	Enabled or Disabled or Enabled on CH Fail		
As per Z1, but applicable to Zone 3.				
Z3 Ground Reach	250%	10%	1000%	10%
Setting entry as percentage of the line impedance that sets Zone 3 forward reach in ohms.				
Z3 Gnd Offset	Enabled	Enabled or Disabled or Enabled on CH Fail		
To enable (activate) or disable (turn off) or enable (only in the case that differential protection communication channel is lost) Zone 3 offset reach for ground faults. By default, Z3 Mho ground characteristic is offset (partly reverse directional), thus not memory/cross polarized. 'If Z3 Gnd Offset' is disabled, Z3 Mho characteristic becomes memory/cross polarized like all other zones.				
Z3 Rev Reach	10%	10%	1000%	1%
Setting entry as percentage of the line impedance that sets Zone 3 reverse reach in ohms.				
ZP Gnd Status	Enabled	Enabled or Disabled or Enabled on CH Fail		
As per Z1, but applicable to Zone P.				
ZP Gnd Dir.	Forward	Forward/ Reverse		
To directionalize ZP forward or reverse.				
ZP Ground Reach	200%	10%	1000%	10%
Setting entry as percentage of the line impedance that sets Zone P forward or reverse reach in ohms.				
Z4 Gnd Status	Enabled	Enabled or Disabled or Enabled on CH Fail		
As per Z1, but applicable to Zone 4.				
Z4 Ground Reach	150%	10%	1000%	10%
Setting entry as percentage of the line impedance that sets reverse Zone 4 reach in ohms.				

ST

Menu text	Default setting	Setting range		Step size
		Min.	Max.	
Digital Filter	Standard	Standard or Special Application		
Setting to enable (activate) 'Standard' or 'Special Application' filters. 'Standard' filters are the default setting and should be applied in the majority of applications. It is only the case when the fault currents and voltages may become very distorted by non-fundamental harmonics that extra filtering is necessary to avoid transient over-reach. In such system conditions the 'Special Applications' setting should be applied.				
CVT Filters	Disabled	Disabled, Passive or Active		
Setting that accommodates the type of voltage transformer being used to prevent transient over-reach and preserve sub-cycle operating time whenever possible. In case of conventional wound VTs, the transients due to voltage collapse during faults are very small and no extra filtering is required, therefore the setting should be 'Disabled' as per default. For a CVT with active Ferro resonance damping, the voltage distortions may be severe and risk transient over-reach. For that reason, the 'CVT Filters' should be set to 'Active'. Trip times increase proportionally (subcycle up to SIR = 2, gradually lengthening for SIR up to 30). For a CVT with passive Ferro resonance damping, the voltage distortions are generally small up to SIR of 30. For such applications, 'CVT Filters' should be set 'Passive'. The relay calculates the SIR and will take marginally longer to trip if the infeed is weak (exceeds the relay's SIR setting).				
SIR Setting	30	5	60	1
Setting that determines when extra filtering will be applied. If on fault inception the calculated SIR exceeds the 'SIR Setting' the relay will marginally slow down, as otherwise there would be a risk of over-reach. This setting is visible only when 'CVT Filters' is set to 'Passive'.				
Load Blinder	Disabled	Disabled or Enabled		
Setting used to activate (enable) or turn off (disable) load blinders. Load blinders, when enabled, have two main purposes: to prevent tripping due to load encroachment under heavy load condition and detect very slow moving power swings.				
Z< Blinder Imp	15/In Ω	0.1/In Ω	500/In Ω	0.01/In Ω
Setting of radius of under-impedance circle.				
Load B/Angle	45°	15°	65°	1°
Angle setting for the two blinder lines boundary with the gradient of the rise or fall with respect to the resistive axis.				
Load Blinder V<	15 V	1 V	70 V	0.5 V
Load blinder phase to ground under-voltage setting that overrides the blinder if the measured voltage in the affected phase falls below setting. Also overrides blinding of phase-phase loops where the phase-phase voltage falls below √3 x (V< setting).				
Dist. Polarizing	1	0.2	5	0.1
The setting defines the composition of polarizing voltage as a mixture of 'Self' and 'Memory' polarizing voltage. 'Self' polarized voltage is fixed to 1pu and could be mixed with 'Memory' polarizing voltage ranging from 0.2pu up to 5pu. The default setting of 1 means that half of the polarizing voltage is made up from 'Self' and the other half from clean 'Memory' voltage. Adding more 'Memory' voltage will enhance the resistive coverage of Mho characteristics, whose expansion is defined as: Mho expansion = [(Dist. Polarizing)/ (Dist. Polarizing + 1)] x Zs Where Zs is the source impedance.				

Menu text	Default setting	Setting range		Step size
		Min.	Max.	
DELTA DIRECTION				
Delta Status	Enabled	Disabled or Enabled		
Setting used to activate (enable) or turn off (disable) Delta Direction. To enable (activate) or disable (turn off) delta direction decision used by distance elements. If disabled, the relay uses conventional (non delta) directional line.				
Delta Char Angle	60°	0°	90°	1°
Setting for the relay characteristic angle used for the delta directional decision.				
Dir V Fwd	5 V	1 V	30 V	0.1 V
Setting for the minimum delta voltage change to permit the directional forward decision.				
Dir V Rev	4 V	0.5 V	30 V	0.1 V
Setting for the minimum delta voltage change to permit the directional reverse decision.				
Dir I Fwd	0.1 x In	0.1 x In	10 x In	0.01 x In
Setting for the minimum delta current change to permit the directional forward decision.				
Dir I Rev	0.08 x In	0.05 x In	10 x In	0.01 x In
Setting for the minimum delta current change to permit the directional reverse decision.				

ST

1.3.3 Distance elements (only for models with distance option)

The column **GROUP x DISTANCE ELEMENTS** is used to individually set reaches, line angles, neutral compensation factors, minimum current operating levels and line tilting for resistive phase faults for each zone if the setting mode is set to 'Advanced'. In 'Simple' setting mode, 'Distance Elements' setting can be **viewed**, but not edited here.

Menu text	Default setting	Setting range		Step size
		Min.	Max.	
PHASE DISTANCE				
Z1 Ph. Reach	8/In Ω	0.05/In Ω	500/In Ω	0.01/In Ω
Setting for Z1 reach.				
Z1 Ph. Angle	70°	20°	90°	1°
Setting of line angle for zone 1.				
R1 Ph. Resistive	8/In Ω	0.05/In Ω	500/In Ω	0.01/In Ω
Setting for Z1 resistive reach. This setting is only visible if Quad is selected.				
Z1 Tilt Top Line	-3°	-30°	30°	1°
Setting of Z1 top reactance line gradient to avoid over-reach for resistive phase faults under heavy load. Minus angle tilts the reactance line downwards.				
Z1 Sensit. Iph>1	0.075 x In	0.05 x In	2 x In	0.01 x In
Current sensitivity setting for Z1 that must be exceeded in faulted phases if Z1 is to operate.				
Z2 Ph. Reach	15/In Ω	0.05/In Ω	500/In Ω	0.01/In Ω
Setting for Z2 reach.				
Z2 Ph. Angle	70°	20°	90°	1°
Setting of line angle for zone 2.				

ST

Menu text	Default setting	Setting range		Step size
		Min.	Max.	
R2 Ph. Resistive	15/In Ω	0.05/In Ω	500/In Ω	0.01/In Ω
Setting for Z2 resistive reach.				
Z2 Tilt Top Line	-3°	-30°	30°	1°
Setting of Z2 top reactance line gradient.				
Z2 Sensit. Iph>2	0.075 x In	0.05 x In	2 x In	0.01 x In
Zone 2 current sensitivity.				
Z3 Ph. Reach	25/In Ω	0.05/In Ω	500/In Ω	0.01/In Ω
Setting for Z3 reach.				
Z3 Ph. Angle	70°	20°	90°	1°
Setting of line angle for zone 3.				
Z3' Ph. Rev Reach	1/In Ω	0.05/In Ω	500/In Ω	0.01/In Ω
Setting for Z3 offset (reverse) reach. This setting is only visible if 'Z3 Offset' is enabled in 'GROUP x DISTANCE SETUP'.				
R3 Ph. Res Fwd.	25/In Ω	0.05/In Ω	500/In Ω	0.01/In Ω
Setting for Z3 resistive reach that defines Quad's right hand line.				
R3 Ph. Res Rev.	1/In Ω	0.05/In Ω	500/In Ω	0.01/In Ω
Setting for Z3 resistive reach that defines Quad's left hand line. This is settable only if Phase Chars. is Quad and Z3 offset is enabled otherwise is fixed to 25% of the right hand blinder.				
Z3 Tilt Top Line	-3°	-30°	30°	1°
Setting of Z3 top reactance line gradient.				
Z3 Sensit. Iph>3	0.050 x In	0.05 x In	2 x In	0.01 x In
Zone 3 current sensitivity.				
ZP Ph. Reach	20/In Ω	0.05/In Ω	500/In Ω	0.01/In Ω
Setting for ZP reach.				
ZP Ph. Angle	70°	20°	90°	1°
Setting of line angle for zone P.				
RP Ph. Resistive	20/In Ω	0.05/In Ω	500/In Ω	0.01/In Ω
Setting for ZP resistive reach.				
ZP Tilt Top Line	-3°	-30°	30°	1°
Setting of ZP top reactance line gradient.				
ZP Sensit. Iph>P	0.05 x In	0.05 x In	2 x In	0.01 x In
Zone P current sensitivity.				
Z4 Ph. Reach	15/In Ω	0.05/In Ω	500/In Ω	0.01/In Ω
Setting for Z4 reach. This is a common setting for Z4 time delayed and Z4 high speed elements used in blocking schemes and for current reversal guard.				
Z4 Ph. Angle	70°	20°	90°	1°
Setting of line angle for zone 4.				
R4 Ph. Resistive	15/In Ω	0.05/In Ω	500/In Ω	0.01/In Ω
Setting for ZP resistive reach.				

Menu text	Default setting	Setting range		Step size
		Min.	Max.	
Z4 Tilt Top Line	-3°	-30°	30°	1°
Setting of Z4 top reactance line gradient.				
Z4 Sensit. Iph>4	0.05 x In	0.05 x In	2 x In	0.01 x In
Zone P current sensitivity.				
GROUND DISTANCE				
Z1 Gnd. Reach	8/In Ω	0.05/In Ω	500/In Ω	0.01/In Ω
Setting for Z1 reach.				
Z1 Gnd. Angle	70°	20°	90°	1°
Setting of line angle (positive sequence) for zone 1.				
Z1 Dynamic Tilt	Enabled	Disabled or Enabled		
Setting that enables or disables zone 1 top reactance line dynamic tilting. If set enabled, the top line angle will be automatically shifted by the angle difference between the fault current and negative sequence current, starting from the 'Z1 Tilt top line' angle setting – see the next cell. The zone 1 is allowed only to tilt down. If Dynamic tilting is disabled, the top line will be shifted by the 'Z1 Tilt top line' setting (Predetermined tilting by fixed angle). This setting is visible only when ground characteristic is set to 'Quad'.				
Z1 Tilt top line	-3°	-30°	30°	1°
Setting of the zone 1 tilt angle. Minus angle tilts the reactance line downwards This setting is visible only when the above setting is visible.				
kZN1 Res. Comp.	1	0	10	0.001
Setting of Z1 residual compensation magnitude.				
kZN1 Res. Angle	0	-180°	90°	1°
Setting of Z1 residual compensation angle.				
R1 Gnd. Resistive	8/In Ω	0.05/In Ω	500/In Ω	0.01/In Ω
Setting for Z1 ground resistive reach. This setting is only visible if Quad is selected.				
Z1 Sensit. Ignd>1	0.075 x In	0.05 x In	2 x In	0.01 x In
Current sensitivity setting for Z1 that must be exceeded in faulted phase **and** the neutral if Z1 is to operate.				
Z2 Gnd. Reach	15/In Ω	0.05/In Ω	500/In Ω	0.01/In Ω
Setting for Z2 reach.				
Z2 Gnd. Angle	70°	20°	90°	1°
Setting of line angle (positive sequence) for zone 2.				
Z2 Dynamic Tilt	Enabled	Disabled or Enabled		
Setting that enables or disables zone 2 top reactance line dynamic tilting. If set enabled, the top line angle will be automatically shifted by the angle difference between the fault current and negative sequence current, starting from the 'Z2 Tilt top line' angle setting – see the next cell. The zone 2, as over-reaching zone, is allowed only to tilt up. If Dynamic tilting is disabled, the top line will be shifted by the 'Z2 Tilt top line' setting (Predetermined tilting by fixed angle). This setting is visible only when ground characteristic is set to 'Quad'.				
Z2 Tilt top line	-3°	-30°	30°	1°
Setting of the zone 2 tilt angle. Minus angle tilts the reactance line downwards This setting is visible only when the above setting is visible.				

ST

Menu text	Default setting	Setting range		Step size
		Min.	Max.	
kZN2 Res. Comp.	1	0	10	0.001
Setting of Z2 residual compensation magnitude.				
kZN2 Res. Angle	0	-180°	90°	1°
Setting of Z2 residual compensation angle.				
R2 Gnd. Resistive	15/In Ω	0.05/In Ω	500/In Ω	0.01/In Ω
Setting for Z2 ground resistive reach.				
Z2 Sensit. Ignd>2	0.075 x In	0.05 x In	2 x In	0.01 x In
Zone 2 current sensitivity.				
Z3 Gnd. Reach	25/In Ω	0.05/In Ω	500/In Ω	0.01/In Ω
Setting for Z3 reach.				
Z3 Gnd. Angle	70°	20°	90°	1°
Setting of line angle (positive sequence) for zone 3.				
Z3' Gnd. Rev Rch	1/In Ω	0.05/In Ω	500/In Ω	0.01/In Ω
Setting for Z3 offset (reverse) reach. This setting is only visible if 'Z3 Offset' is enabled in 'GROUP x DISTANCE SETUP'.				
Z3 Dynamic Tilt	Enabled	Disabled or Enabled		
Setting that enables or disables Z3 top reactance line dynamic tilting. If set enabled, the top line angle will be automatically shifted by the angle difference between the fault current and negative sequence current, starting from the 'Z3 Tilt top line' angle setting – see the next cell. The ZP, as over-reaching zone, is allowed only to tilt up. If Dynamic tilting is disabled, the top line will be shifted by the 'ZP Tilt top line' setting (Predetermined tilting by fixed angle). This setting is visible only when ground characteristic is set to 'Quad' and Z3 offset disabled.				
Z3 Tilt top line	-3°	-30°	30°	1°
Setting of the Z3 tilt angle. Minus angle tilts the reactance line downwards This setting is visible only when the above setting is visible.				
kZN3 Res. Comp.	1	0	10	0.001
Setting of Z3 residual compensation magnitude.				
kZN3 Res. Angle	0	-180°	90°	1°
Setting of Z3 residual compensation angle.				
R3 Gnd. Res. Fwd	25/In Ω	0.05/In Ω	500/In Ω	0.01/In Ω
Setting for Z3 resistive reach that defines Quad's right hand line.				
R3 Gnd. Res. Rev	1/In Ω	0.05/In Ω	500/In Ω	0.01/In Ω
Setting for Z3 resistive reach that defines Quad's left hand line. This is settable only if Ground Chars. is Quad and Z3 offset is enabled otherwise is fixed to 25% of the right hand blinder.				
Z3 Sensit. Ignd>3	0.05 x In	0.05 x In	2 x In	0.01 x In
Zone 3 current sensitivity.				
ZP Gnd. Reach	20/In Ω	0.05/In Ω	500/In Ω	0.01/In Ω
Setting for ZP reach.				

Menu text	Default setting	Setting range		Step size
		Min.	Max.	
ZP Gnd. Angle	70°	20°	90°	1°
Setting of line angle (positive sequence) for zone P.				
ZP Dynamic Tilt	Enabled	Disabled or Enabled		
Setting that enables or disables ZP top reactance line dynamic tilting. If set enabled, the top line angle will be automatically shifted by the angle difference between the fault current and negative sequence current, starting from the 'ZP Tilt top line' angle setting – see the next cell. The ZP, as over-reaching zone, is allowed only to tilt up. If Dynamic tilting is disabled, the top line will be shifted by the 'ZP Tilt top line' setting (Predetermined tilting by fixed angle). This setting is visible only when ground characteristic is set to 'Quad'.				
ZP Tilt top line	-3°	-30°	30°	1°
Setting of the ZP tilt angle. Minus angle tilts the reactance line downwards This setting is visible only when the above setting is visible.				
kZNP Res. Comp.	1	0	10	0.001
Setting of ZP residual compensation magnitude.				
kZNP Res. Angle	0	-180°	90°	1°
Setting of ZP residual compensation angle.				
RP Gnd. Resistive	20/In Ω	0.05/In Ω	500/In Ω	0.01/In Ω
Setting for ZP ground resistive reach.				
ZP Sensit. Ignd>P	0.05 x In	0.05 x In	2 x In	0.01 x In
Zone P current sensitivity.				
Z4 Gnd. Reach	15/In Ω	0.05/In Ω	500/In Ω	0.01/In Ω
Setting for Z4 reach. This is a common setting for Z4 time delayed and Z4 high speed elements used in blocking schemes and for current reversal guard.				
Z4 Gnd. Angle	70°	20°	90°	1°
Setting of line angle (positive sequence) for zone 4.				
Z4 Dynamic Tilt	Enabled	Disabled or Enabled		
Setting that enables or disables Z4 top reactance line dynamic tilting. If set enabled, the top line angle will be automatically shifted by the angle difference between the fault current and negative sequence current, starting from the 'Z4 Tilt top line' angle setting – see the next cell. The Z4, as over-reaching zone, is allowed only to tilt up. If Dynamic tilting is disabled, the top line will be shifted by the 'Z4 Tilt top line' setting (Predetermined tilting by fixed angle). This setting is visible only when ground characteristic is set to 'Quad'.				
Z4 Tilt top line	-3°	-30°	30°	1°
Setting of the Z4 tilt angle. Minus angle tilts the reactance line downwards This setting is visible only when the above setting is visible.				
kZN4 Res. Comp.	1	0	10	0.001
Setting of Z4 residual compensation magnitude.				
kZN4 Res. Angle	0	-180°	90°	1°
Setting of Z4 residual compensation angle.				
R4 Gnd. Resistive	15/In Ω	0.05/In Ω	500/In Ω	0.01/In Ω
Setting for Z4 ground resistive reach.				

Menu text	Default setting	Setting range		Step size
		Min.	Max.	
Z4 Sensit. Ignd>4	0.05 x In	0.05 x In	2 x In	0.01 x In
Zone 4 current sensitivity.				

1.3.4 Phase differential

The column “GROUP x PHASE DIFF” is used to:

- Select the settings of the phase differential characteristic
- Define CT correction factors
- Define type of compensation (Capacitive Charging current or phase shift compensation). If charging current is selected, to set the value of susceptance and if phase shift is chosen, to set the value of vector compensation (P543 and P545 models only)
- Enable or Disable inrush restrain in the case of transformers in zone (P543 and P545 models only)
- Set the amount of positive sequence current required for Differential current transformer supervision

ST

The column “GROUP x PHASE DIFF” is invisible if disabled in ‘CONFIGURATION’ column.

Menu text	Default setting	Setting range		Step size
		Min.	Max.	
Phase Diff	Enabled	Enabled or Disabled		
To enable (activate) or disable (turn off) the Differential protection function in the group.				
Phase Is1	0.2In	0.2In	2In	0.05In
Setting that defines the minimum pick-up level of the relay.				
Phase Is2	2In	1In	30In	0.05In
This setting defines the bias current threshold, above which the higher percentage bias k2 is used.				
Phase k1	30%	30%	150%	5%
The lower percentage bias setting used when the bias current is below Is2. This provides stability for small CT mismatches, whilst ensuring good sensitivity to resistive faults under heavy load conditions.				
Phase k2	150% (2 end or dual redundant) 100% (3 end)	30%	150%	5%
The higher percentage bias setting used to improve relay stability under heavy through fault current conditions.				
Phase Char	DT	DT, IEC S Inverse, IEC V Inverse, IEC E inverse, UK LT Inverse IEEE M Inverse, IEEE V Inverse, IEEE E Inverse, US Inverse, US ST Inverse		
Setting for the tripping characteristic for differential protection element.				
Phase Time Delay	0 s	0 s	100 s	0.01 s
Setting for the time-delay for the definite time setting if selected. The setting is visible only when DT function is selected.				

Menu text	Default setting	Setting range		Step size
		Min.	Max.	
Phase TMS	1	0.025	1.2	0.005
Setting for the time multiplier setting to adjust the operating time of the IEC IDMT characteristic.				
Phase Time Dial	0.01	0.01	100	0.01
Setting for the time multiplier setting to adjust the operating time of the IEEE/US IDMT curves. The Time Dial (TD) is a multiplier on the standard curve equation, in order to achieve the required tripping time. The reference curve is based on TD = 1. **Care:** Certain manufacturer's use a mid-range value of TD = 5 or 7, so it may be necessary to divide by 5 or 7 to achieve parity.				
PIT Time	0.2 s	0 s	0.2 s	0.005 s
This timer is initiated upon receipt of PIT flag in the message. Once this timer elapses, and as long as the current is above of Is1 setting, the relay closes its three phase differential trip contacts.				
Ph CT Corr'tion	1	1	8	0.01
Setting used to compensate CT ratios mismatch between terminals.				
Compensation	None	None, Cap Charging, Vector group		
Setting to define type of compensation. If set to **None**, **Susceptance Inrush Restraint**, **Id High Set** and **Vectorial Comp** are invisible. If set to **Cap Charging**, **Susceptance** setting becomes visible and **Inrush Restraint**, **Id High Set** and **Vectorial Comp** are invisible. If set to **Vector group**, **Inrush Restraint**, **Id High Set** and **Vectorial Comp** settings become visible while **Susceptance** setting is invisible. **Inrush Restraint**, **Id High Set** and **Vectorial Comp** are only applicable in relay models P543 and P545.				
Susceptance	1E-8*In	1E-8*In	10*In	1E-8*In
*Visible when **Compensation** is set to **Cap Charging**.* Setting to define the positive sequence susceptance value of the circuit for capacitive charging current compensation				
Inrush Restraint	Disabled	Enabled or Disabled		
*Only models P543 and P545 when **Compensation** is set to **Vector group**.* To enable (activate) or disable (turn off) the additional bias inrush restrain. When set to enable “Id High Set” becomes visible. **Note:** It must be ensure that this function is enabling at each end to avoid maloperation.				
Id High Set	4*In	4*In	32*In	0.01*In
*Only in models P543 and P545 when **Inrush Restraint** is enable*. Pick-up setting for high set differential protection				
Vectorial Comp	Yy0 (0 deg)	Yy0 (0 deg), Yd1 (-30 deg), Yy2 (-60 deg), Yd3 (-90 deg), Yy4 (-120 deg), Yd5 (-150 deg), Yy6 (180 deg), Yd7 (+150 deg), Yy8 (+120 deg), Yd9 (+90 deg), Yy10 (+60 deg), Yd11 (+30 deg), Ydy0 (0 deg), Ydy6 (180 deg)		
*Only in models P543 and P545 when **Vectorial Comp** is enable*. To define the vector compensation to account for phase shift correction and zero sequence current filtering (for transformer applications)				

ST

Menu text	Default setting	Setting range		Step size
		Min.	Max.	
Phase Is1 CTS	1.2*In	0.2*In	4*In	0.05*In
Setting that defines the minimum pick-up level of the relay when a current transformer supervision CTS is declared				
PIT I Selection	Remote	Local or Remote		
Setting that defines the current to be used for the Permissive Intertrip				

1.3.5 Scheme logic (basic and aided scheme logic). Only in models with distance option

The column **GROUP x SCHEME LOGIC** is used to:

- Set operating mode and associated timers for each distance zone when distance operates in the Basic scheme
- Select aided schemes via one or two available signaling channels
- Define operating zones during Trip On Close (TOC)

ST

Menu text	Default setting	Setting range		Step size
		Min.	Max.	
BASIC SCHEME				
Zone 1 Tripping	Phase and Ground	Disabled, Phase only, Ground only, or Phase and Ground		
Setting to select for which types of fault Zone 1 elements will be applied.				
tZ1 Ph. Delay	0 s	0 s	10 s	0.01 s
Time delay for Z1 phase element.				
tZ1 Gnd. Delay	0 s	0 s	10 s	0.01 s
Time delay for Z1 ground element.				
Zone 2 Tripping	Phase and Ground	Disabled, Phase only, Ground only, or Phase and Ground		
Setting to select for which types of fault Zone 2 elements will be applied.				
tZ2 Ph. Delay	0.2 s	0 s	10 s	0.01 s
Time delay for Z2 phase element.				
tZ2 Gnd. Delay	0.2 s	0 s	10 s	0.01 s
Time delay for Z2 ground element.				
Zone 3 Tripping	Phase and Ground	Disabled, Phase only, Ground only, or Phase and Ground		
Setting to select for which types of fault Zone 3 elements will be applied.				
tZ3 Ph. Delay	0.6 s	0 s	10 s	0.01 s
Time delay for Z3 phase element.				
tZ2 Gnd. Delay	0.6 s	0 s	10 s	0.01 s
Time delay for Z3 ground element.				
Zone P Tripping	Phase and Ground	Disabled, Phase only, Ground only, or Phase and Ground		
Setting to select for which types of fault Zone P elements will be applied.				
tZP Ph. Delay	0.4 s	0 s	10 s	0.01 s
Time delay for ZP phase element.				

Menu text	Default setting	Setting range		Step size
		Min.	Max.	
tZP Gnd. Delay	0.4 s	0 s	10 s	0.01 s
Time delay for ZP ground element.				
Zone 4 Tripping	Phase and Ground	Disabled, Phase only, Ground only, or Phase and Ground		
Setting to select for which types of fault Zone 4 elements will be applied.				
tZ4 Ph. Delay	1 s	0 s	10 s	0.01 s
Time delay for Z4 phase element.				
tZ4 Gnd. Delay	1 s	0 s	10 s	0.01 s
Time delay for Z4 ground element.				
AIDED SCHEME 1				
Aid. 1 Selection	Disabled	Disabled, PUR, PUR Unblocking, POR, POR Unblocking, Blocking 1, Blocking 2, Prog. Unblocking or Programmable		
Selection of the generic scheme type for aided channel 1. **Note:** POR is equivalent to POTT (permissive overreach transfer trip), PUR is equivalent to PUTT (permissive underreach transfer trip).				
Aid 1 Distance	Phase and Ground	Disabled, Phase Only, Ground Only, or Phase and Ground		
Setting to select whether distance elements should key the scheme selected as per the previous setting. If set to Disabled, no distance zones interact with this aided scheme, and basic scheme tripping only applies.				
Aid. 1 Dist. Dly	0 s	0 s	1 s	0.002 s
Trip time delay for Aided 1 Distance schemes.				
Unblocking Delay	0.05 s	0 s	0.1 s	0.002 s
Time delay after Loss of Guard until unblocking occurs. After the set delay, the relay will respond as though an aided signal has been received from the remote end. This setting is visible only when PUR Unblocking, POR Unblocking or Programmable Unblocking schemes are chosen.				
Aid. 1 DEF	Enabled	Disabled or Enabled		
Setting to select whether a DEF scheme should be mapped to Aided scheme 1. (Not applicable where a Permissive Underreaching scheme selection has been made).				
Aid. 1 DEF Dly	0 s	0 s	1 s	0.002 s
Time delay for Aided 1 DEF tripping.				
Aid. 1 DEF Trip	3 Pole	1 or 3 Pole		
Setting that defines the tripping mode for Aided 1 DEF. This setting is visible only if tripping mode under GROUP x LINE PARAMETERS/Trip Mode is set to 1 and 3 pole.				
Aid. 1 Delta	Enabled	Disabled or Enabled		
Setting to select whether a Delta directional comparison scheme should be mapped to Aided scheme 1. (Not applicable where a Permissive Underreaching scheme selection has been made).				
Aid. 1 Delta Dly	0 s	0 s	Aid. 1 Delta Dly	0 s
Time delay for Aided 1 Delta tripping.				

ST

ST

Menu text	Default setting	Setting range		Step size
		Min.	Max.	
Aid. 1 DeltaTrip	3 Pole	1 or 3 Pole		
Setting that defines tripping mode for Aided 1 Delta. This setting is visible only if tripping mode under GROUP x LINE PARAMETERS/ Trip Mode is set to 1 and 3 pole.				
tREV. Guard	0.02 s	0 s	0.15 s	0.002 s
Setting for the current reversal guard timer. Intended to keep stability on a healthy line, whilst breakers open on a faulted parallel line to clear the fault. This setting is visible only when over-reaching or Blocking schemes are selected.				
Send on Trip	Aided/Z1	Aided/Z1, Any Trip or None		
Setting that defines the reinforced trip signal for POR Aided 1 scheme. If selected to: **None**: No reinforced signal is issued **Aided/Z1**: The reinforced signal is issued with aided trip or with Z1 if aided distance scheme is enabled **Any Trip**: Signal is reinforced with Any trip (DDB 522)				
Weak Infeed	Disabled	Disabled, Echo, or Echo and Trip		
Setting that defines Aided 1 scheme operation in case of weak infeed conditions, where no protection elements detect the fault at the local end, but an aided channel has been received from the remote end. Setting “Echo” will allow the received signal to be returned to the remote relay, “Trip” will allow local end tripping after a set delay.				
WI Sngl Pole Trp	Disabled	Disabled or Enabled		
Setting that defines the Weak Infeed tripping mode. When disabled, any WI trip will be converted to a 3 phase trip.				
WI V< Thresh.	45 V	10 V	70 V	5 V
Setting of Weak Infeed level detector. If phase - ground voltage in any phase drops below the threshold and with insufficient phase current for the protection to operate, the end is declared as a weak infeed terminal.				
WI Trip Delay	0.06 s	0 s	1 s	0.002 s
Setting for the weak infeed trip time delay.				
Custom Send Mask	0000000001	Bit 0 = Z1 Gnd, Bit 1 = Z2 Gnd, Bit 2 = Z4 Gnd, Bit 3 = Z1 Ph, Bit 4 = Z2 Ph, Bit 5 = Z4 Ph, Bit 6 = DEF Fwd, Bit 7 = DEF Rev, Bit		
Logic Settings that determine the element or group of elements that are sending a permissive signal to the other line end. For the signal to be sent, the element must operate and a corresponding bit in the matrix must be set to **1** (High). The above mapping is part of a custom made Aided 1 scheme, and unlike all other schemes that are factory tested, the customer must take the responsibility for testing and the operation of the scheme. This setting is visible only if a Programmable or Prog. Unblocking scheme is selected.				
Custom Time PU	0 s	0 s	1 s	0.002 s
Pick up time delay of DDB signal ‘Aid1 CustomT in’, available in the PSL logic. Once the time delay elapses, the DDB signal ‘Aid1 CustomT out’ will become high.				
Custom Time DO	0 s	0 s	1 s	0.002 s
Drop off time delay of DDB signal ‘Aid1 CustomT in’. Once the time delay elapses, the DDB signal ‘Aid1 CustomT out’ will become low. **Note:** The timer is a combined hard coded PU/DO timer for Custom Aided scheme 1.				

Menu text	Default setting	Setting range		Step size
		Min.	Max.	
AIDED SCHEME 2				
All the settings are similar to AIDED SCHEME 1 above. Elements are mapped to the second scheme when they are wished to run independent of Aided Scheme 1.				
Trip On Close				
SOTF Status	Enabled Pole Dead	Disabled, Enabled Pole Dead, Enabled ExtPulse, En Pdead + Pulse		
Setting that enables [note] (turns on) or disables (turns off) a special protection logic which can apply upon line energization. SOTF = Switch on to Fault. **Note:** SOTF can be enabled in three different manners: 1. Enabled Pole Dead. By using pole dead logic detection logic 2. Enabled ExtPulse. By using an external pulse 3. En Pdead + Pulse. By using both				
SOTF Delay	110 s	0.2 s	1000 s	0.2 s
The SOTF Delay is a pick up time delay that starts after opening all 3 poles of a CB. If the CB is then closed after the set time delay has expired, SOTF protection will be active. SOTF provides enhanced protection for manual closure of the breaker (not for auto-reclosure). This setting is visible only if Pole Dead or Pdead + Pulse are selected to enable SOTF.				
SOTF Tripping	000001	Bit 0 = Zone 1, Bit 1 = Zone 2, Bit 2 = Zone 3, Bit 3 = Zone P, Bit 4 = Zone 4, Bit 5 = Current No Volt		
Logic Settings that determine the Distance zones that are allowed to operate instantaneously upon line energization. If, for example, Bit 1 is set to **1** (High), Z2 will operate without waiting for the usual tZ2 time delay should a fault lie within Z2 upon CB closure. It also allows a user to map 'Currents No Volt' option for fast fault clearance upon line energization. SOTF tripping is 3 phase and auto-reclose will be blocked.				
TOR Status	Enabled	Disabled or Enabled		
Setting that enables (turns on) or disables (turns off) special protection following auto-reclosure. When set Enabled, TOR will be activated after the 'TOC Delay' has expired, ready for application when an auto-reclose shot occurs. TOR = Trip on (auto)Reclose.				
TOR Tripping	000001	Bit 0 = Zone 1, Bit 1 = Zone 2, Bit 2 = Zone 3, Bit 3 = Zone P, Bit 4 = Zone 4, Bit 5 = Current No Volt		
Logic Settings that determine the Distance zones that are allowed to operate instantaneously upon line energization. If, for example, Bit 1 is set to **1** (High), Z2 will operate without waiting for the usual tZ2 time delay should a fault lie within Z2 upon CB closure. It also allows a user to map 'Currents No Volt' option for fast fault clearance upon line reclosure on a permanent fault. TOR tripping is 3 phase and auto-reclose will be blocked.				
TOC Reset Delay	0.5 s	0.1 s	2 s	0.1 s
The TOC Reset Delay is a user settable time window during which TOC protection is available. The time window starts timing upon CB closure and it is common for SOTF and TOR protection. Once this timer expires after a successful (re)closure, all protection reverts to normal.				

ST

Menu text	Default setting	Setting range		Step size
		Min.	Max.	
TOC Delay	0.2 s	0.05 s	0.2 s	0.01 s
The TOC Delay is a user settable time delay following the CB opening after which the TOR becomes active (enabled). The time must be set in conjunction with the Dead Time setting of the Auto-reclose so that the setting must not exceed the minimum Dead Time setting since both timers start instantaneously.				
SOTF Pulse	0.5 s	0.1 s	10 s	0.01 s
The SOTF Pulse is a user settable time window during which the SOTF protection is available. This setting is visible only if ExtPulse or Pdead + Pulse are selected to enable SOTF				
Z1 Extension				
Z1 Ext Scheme	Disabled	Disabled, Enabled, En. on Ch1 Fail, En. On Ch2 Fail, En All Ch Fail, or En. Any Ch Fail		
Setting that enables (turns on) or disables (turns off) the Zone 1 Extension scheme. When Enabled, extended Zone 1 will apply unless the Reset Zone 1 Extension DDB signal is energized. Otherwise, it is possible to enable Z1X when aided scheme channel(s) fail.				
Z1 Ext Ph	150%	100%	200%	1%
Extended Z1X phase reach as a percentage of the Z1 phase reach. (Phase resistive reach for Z1X is the same as for Zone 1.)				
Z1 Ext Gnd	150%	100%	200%	1%
Extended Z1X ground reach as a percentage of Z1 ground reach. (Ground resistive reach and residual compensation for Z1X is the same as for Zone 1.)				
Loss of Load				
LOL Scheme	Disabled	Disabled, Enabled, En. on Ch1 Fail, En. On Ch2 Fail, En All Ch Fail, or En. Any Ch Fail		
Setting that enables (turns on) or disables (turns off) the Loss of Load scheme. When Enabled, accelerated tripping can apply as the remote end opens (3-pole trip applications only). Otherwise, it is possible to enable Z1X when aided scheme channel(s) fail.				
LOL <I	0.5 x In	0.05 x In	1 x In	0.05 x In
LOL undercurrent detector that indicates a loss of load condition on the unfaulted phases, indicating that the remote end has just opened.				
LOL Window	0.04 s	0.01 s	0.1 s	0.01 s
Length of LOL window - the time window in which Zone 2 accelerated tripping can occur following LOL undercurrent detector operation.				

1.3.6 Power swing blocking (only in models with distance option)

The column **GROUP x POWER SWING Blk.** is used to set either blocking or indication for out of step conditions. If blocking mode is selected, a user can individually select for each zone to be either blocked or allow tripping.

The power swing detection is based on superimposed current, and is essentially "settings free".

Menu text	Default setting	Setting range		Step size
		Min.	Max.	
PSB Status	Blocking	Blocking or Indication		
To enable (activate) Indication or Blocking mode. This setting is invisible if disabled in 'CONFIGURATION' column. If Indication status is selected, the alarm will be issued but tripping by distance protection will be unaffected. When Blocking status is selected, the user is presented with further options as to which zones do/do not require blocking.				
Zone 1 Ph. PSB	Blocking	Blocking, Delayed Unblocking, or Allow trip		
Setting that defines the Z1 phase element operation should any swing impedance enter and remains inside the Z1 phase characteristic for more then 'tZ1 Ph. Delay'. If Blocking is selected, the Z1 phase element operation will be disabled for the duration of the swing. If Unblocking is chosen, the Z1 phase element block will be removed after drop off timer 'PSB Unblocking Dly' has expired, even if the swing is still present. This allows system separation when swings fail to stabilize. In 'Allow trip' mode, the Z1 phase element is unaffected by PSB detection.				
Zone x Ph. PSB	Blocking	Blocking, Delayed Unblocking, or Allow trip		
Individual Zone setting options all as per Zone 1 Ph. (x = 2, 3, 4, P).				
Zone 1 Gnd. PSB	Blocking	Blocking, Delayed Unblocking, or Allow trip		
Setting that defines the Z1 ground element operation should any swing impedance enter and remains inside the Z1 ground characteristic for more then 'tZ1 Gnd. Delay'. If Blocking is selected, the Z1 ground element operation will be disabled for the duration of the swing. If Unblocking is chosen, the Z1 ground element block will be removed after drop off timer 'PSB Unblocking Dly' has expired, even if the swing is still present. This allows system separation when swings fail to stabilize. In 'Allow trip' mode, the Z1 ground element is unaffected by PSB detection.				
Zone x Gnd. PSB	Blocking	Blocking, Delayed Unblocking, or Allow trip		
Individual Zone setting options all as per Zone 1 Gnd. (x = 2, 3, 4, P).				
PSB Unblocking	Disabled	Disabled or Enabled		
To enable (activate) or disable (turn off) the PSB Unblocking delay timer. This setting is common to all zones and it is visible if any distance zone is set to 'PSB Unblocking Dly'. For swing durations longer than this setting, blocking can be selectively removed.				
PSB Unblock dly	2 s	0.1 s	10 s	0.1 s
Unblock timer setting - on expiry, power swing blocking can optionally be removed.				

ST

ST

Menu text	Default setting	Setting range		Step size
		Min.	Max.	
PSB Reset Delay	0.2 s	0.05 s	2 s	0.05 s
Setting to maintain the power swing detection for a period after the delta current detection has reset. ΔI will naturally reset momentarily twice in each swing cycle, and a short setting ensures continued PSB pick-up, to ride through the gaps.				
OST Mode	Disabled	Disabled, Predictive & OST Trip, OST Trip, Predictive OST Trip		
To enable (activate) or disable (turn off) Out of Step protection. This setting (and all related settings below) is invisible if PowerSwing Block is disabled in 'CONFIGURATION' column. If 'OST Trip' is selected, relay will operate after Tost time delay if the measured positive sequence impedance has passed the Z6-Z5 region slower than 25 ms (@ 50 or 60 Hz) and if the polarity of the resistive component has changed between entering and exiting zone 5. If 'Predictive OST Trip' is selected, relay will operate after Tost time delay if the positive sequence impedance has passed the Z6-Z5 region faster than 25ms but slower than 'Delta t' set time. If 'Predictive & OST Trip' is selected, it will operate if any of two above criteria is satisfied.				
Z5	30/In Ω	0.1/In Ω	500/In Ω	0.01/In Ω
Setting for Z5 forward reactance reach.				
Z6	32/In Ω	0.1/In Ω	500/In Ω	0.01/In Ω
Setting for Z6 forward reactance reach.				
Z5'	-30/In Ω	-0.1/In Ω	-500/In Ω	0.01/In Ω
Setting for Z5 reverse reactance reach.				
Z6'	-32/In Ω	-0.1/In Ω	-500/In Ω	0.01/In Ω
Setting for Z6 reverse reactance reach.				
R5	20/In Ω	0.1/In Ω	200/In Ω	0.01/In Ω
Setting for Z5 positive resistive reach.				
R6	22/In Ω	0.1/In Ω	200/In Ω	0.01/In Ω
Setting for Z6 positive resistive reach.				
R5'	-20/In Ω	-0.1/In Ω	-200/In Ω	0.01/In Ω
Setting for Z5 negative resistive reach.				
R6'	-22/In Ω	-0.1/In Ω	-200/In Ω	0.01/In Ω
Setting for Z6 negative resistive reach.				
Blinder Angle	80°	20°	90°	1°
Setting of blinder angle, common for both Z5 and Z6.				
Delta t	0.03 s	0.03 s	1 s	0.001 s
Time setting that is compared with the measured time between positive sequence impedance entering Z6 and entering Z5.				
Tost	0 s	0 s	1 s	0.01 s
Tripping time delay common for any OST setting option.				

1.3.7 Phase overcurrrent protection

The overcurrent protection included in the MiCOM P54x provides four stage non-directional/ directional phase segregated overcurrent protection with independent time delay characteristics. All overcurrent and directional settings apply to each phase but are independent for each of the four stages. To arrange a single pole tripping by overcurrent protection, the default PSL needs to be modified.

The first two stages of overcurrent protection have time-delayed characteristics which are selectable between inverse definite minimum time (IDMT), or definite time (DT). The third and fourth stages have definite time characteristics only.

Menu text	Default setting	Setting range		Step size
		Min.	Max.	
I>1 Status	Enabled	Disabled, Enabled, Enabled VTS, Enabled Ch Fail, En VTSorCh Fail, En VTSandCh Fail		
Setting that defines first stage overcurrent operating status. Depending of this setting, I>1 will be enabled permanently or in case of Voltage Transformer Supervision (fuse fail) operation, or in case of communication channel fail, or a combination (and /or) of both.				
I>1 Function	IEC S Inverse	DT, IEC S Inverse, IEC V Inverse, IEC E inverse, UK LT Inverse IEEE M Inverse, IEEE V Inverse, IEEE E Inverse, US Inverse, US ST Inverse		
Setting for the tripping characteristic for the first stage overcurrent element.				
I>1 Directional	Non-directional	Non-directional Directional Fwd Directional Rev		
This setting determines the direction of measurement for first stage element.				
I>1 Current Set	1 x In	0.08 x In	4.0 x In	0.01 x In
Pick-up setting for first stage overcurrent element.				
I>1 Time Delay	1 s	0 s	100 s	0.01 s
Setting for the time-delay for the definite time setting if selected for first stage element. The setting is visible only when DT function is selected.				
I>1 TMS	1	0.025	1.2	0.005
Setting for the time multiplier setting to adjust the operating time of the IEC IDMT characteristic.				
I>1 Time Dial	1	0.01	100	0.01
Setting for the time multiplier setting to adjust the operating time of the IEEE/US IDMT curves. The Time Dial (TD) is a multiplier on the standard curve equation, in order to achieve the required tripping time. The reference curve is based on TD = 1. **Care:** Certain manufacturer's use a mid-range value of TD = 5 or 7, so it may be necessary to divide by 5 or 7 to achieve parity.				
I>1 Reset Char.	DT	DT or Inverse		N/A
Setting to determine the type of reset/release characteristic of the IEEE/US curves.				
I>1 tRESET	0 s	0 s	100 s	0.01 s
Setting that determines the reset/release time for definite time reset characteristic.				
I>2 Cells as for I>1 above				
Setting the same as for the first stage overcurrent element.				

ST

ST

Menu text	Default setting	Setting range		Step size
		Min.	Max.	
I>3 Status	Disabled	Disabled, Enabled, Enabled VTS, Enabled Ch Fail, En VTSorCh Fail, En VTSandCh Fail		
Setting that defines third stage overcurrent operating status. Depending of this setting, I>3 will be enabled permanently or in case of Voltage Transformer Supervision (fuse fail) operation, or in case of communication channel fail, or a combination (and /or) of both.				
I>3 Directional	Non-directional	Non-directional Directional Fwd Directional Rev		N/A
This setting determines the direction of measurement for the third stage overcurrent element.				
I>3 Current Set	10 x In	0.08 x In	32 x In	0.01 x In
Pick-up setting for third stage overcurrent element.				
I>3 Time Delay	0 s	0 s	100 s	0.01 s
Setting for the operating time-delay for third stage overcurrent element.				
I>3 Status	Disabled	Disabled, Enabled, Enabled VTS, Enabled Ch Fail, En VTSorCh Fail, En VTSandCh Fail		
Setting that defines fourth stage overcurrent operating status. Depending of this setting, I>3 will be enabled permanently or in case of Voltage Transformer Supervision (fuse fail) operation, or in case of communication channel fail, or a combination (and /or) of both.				
I>3 Directional	Non-directional	Non-directional Directional Fwd Directional Rev		N/A
This setting determines the direction of measurement for the fourth stage overcurrent element.				
I>3 Current Set	10 x In	0.08 x In	32 x In	0.01 x In
Pick-up setting for fourth stage overcurrent element.				
I>3 Time Delay	0 s	0 s	100 s	0.01 s
Setting for the operating time-delay for fourth stage overcurrent element.				
I> Char. Angle	30°	–95°	+95°	1°
Setting for the relay characteristic angle used for the directional decision. The setting is visible only when 'Directional Fwd' or 'Directional Rev' is set.				
I> Blocking	00001111	Bit 0 = VTS Blocks I>1, Bit 1 = VTS Blocks I>2, Bit 2 = VTS Blocks I>3, Bit 3 = VTS Blocks I>4, Bits 5 to 7 are not used.		
Logic Settings that determine whether blocking signals from VT supervision affect certain overcurrent stages. VTS Block – only affects directional overcurrent protection. With the relevant bit set to 1, operation of the Voltage Transformer Supervision (VTS), will block the stage. When set to 0, the stage will revert to Non-directional upon operation of the VTS. If I> Status is set 'Enabled VTS', no blocking should be selected in order to provide fault clearance by overcurrent protection during the VTS condition.				

1.3.8 Negative sequence overcurrent

The negative sequence overcurrent protection included in the MiCOM P54x provides four stage non-directional/ directional phase segregated negative sequence overcurrent protection with independent time delay characteristics. The first two stages of negative sequence overcurrent protection have time-delayed characteristics which are selectable between inverse definite minimum time (IDMT), or definite time (DT). The third and fourth stages have definite time characteristics only.

Menu text	Default setting	Setting range		Step size
		Min.	Max.	
I2>1 Status	Disabled	Disabled or Enabled		N/A
Setting to enable or disable the first stage negative sequence element.				
I2>1 Function	DT	Disabled, DT, IEC S Inverse, IEC V Inverse, IEC E Inverse, UK LT Inverse, IEEE M Inverse, IEEE V Inverse, IEEE E Inverse, US Inverse, US ST Inverse		
Setting for the tripping characteristic for the first stage negative sequence overcurrent element.				
I2>1Direction	Non-directional	Non-directional Directional Fwd Directional Rev		N/A
This setting determines the direction of measurement for this element.				
I2>1 Current Set	0.2 x In	0.08In	4In	0.01In
Pick-up setting for the first stage negative sequence overcurrent element.				
I2>1 Time Delay	10	0 s	100 s	0.01 s
Setting for the operating time-delay for the first stage negative sequence overcurrent element.				
I2>1 TMS	1	0.025	1.2	0.005
Setting for the time multiplier setting to adjust the operating time of the IEC IDMT characteristic.				
I2>1 Time Dial	1	0.01	100	0.01
Setting for the time multiplier setting to adjust the operating time of the IEEE/US IDMT curves.				
I2>1 Reset Char.	DT	DT or Inverse		N/A
Setting to determine the type of reset/release characteristic of the IEEE/US curves.				
I2>1 tRESET	0	0 s	100 s	0.01 s
Setting that determines the reset/release time for definite time reset characteristic.				
I2>2 Cells as for I2>1 Above				
I2>3 Status	Disabled	Disabled or Enabled		N/A
Setting to enable or disable the third stage negative sequence element.				
I2>3 Direction	Non-directional	Non-directional Directional Fwd Directional Rev		N/A
This setting determines the direction of measurement for this element.				

ST

Menu text	Default setting	Setting range		Step size
		Min.	Max.	
I2>3 Current Set	0.2 x In	0.08In	32In	0.01In
Pick-up setting for the third stage negative sequence overcurrent element.				
I2>3 Time Delay	10 s	0 s	100 s	0.01 s
Setting for the operating time-delay for the third stage negative sequence overcurrent element.				
I2>4 Cells as for I2>3 Above				
I2> VTS Blocking	1111	Bit 00 = VTS blocks I2>1 Bit 01 = VTS blocks I2>2 Bit 02 = VTS blocks I2>3 Bit 03 = VTS blocks I2>4		
Logic settings that determine whether VT supervision blocks selected negative sequence overcurrent stages. Setting '0' will permit continued non-directional operation.				
I2> Char. Angle	–60°	–95°	+95°	1°
Setting for the relay characteristic angle used for the directional decision.				
I2> V2pol Set	5	0.5	25	0.5
Setting determines the minimum negative sequence voltage threshold that must be present to determine directionality.				

ST

1.3.9 Broken conductor

Menu text	Default setting	Setting range		Step size
		Min.	Max.	
Broken Conductor	Disabled	Enabled/Disabled		N/A
Enables or disables the broken conductor function.				
I2/I1	0.2	0.2	1	0.01
Setting to determine the pick- up level of the negative to positive sequence current ratio.				
I2/I1 Time Delay	60 s	0 s	100 s	1 s
Setting for the function operating time delay.				

1.3.10 Earth fault

The back-up earth fault overcurrent protection included in the MiCOM P54x provides four stage non-directional/directional three-phase overcurrent protection with independent time delay characteristics. All earth fault overcurrent and directional settings apply to all three phases but are independent for each of the four stages.

The first two stages of earth fault overcurrent protection have time-delayed characteristics which are selectable between inverse definite minimum time (IDMT), or definite time (DT). The third and fourth stages have definite time characteristics only.

Menu text	Default setting	Setting range		Step size
		Min.	Max.	
IN>1 Status	Enabled	Disabled, Enabled, Enabled VTS, Enabled Ch Fail, En VTSorCh Fail, En VTSandCh Fail		
Setting that defines first stage overcurrent operating status. Depending of this setting, IN>1 will be enabled permanently or in case of Voltage Transformer Supervision (fuse fail) operation, or in case of communication channel fail, or a combination (and /or) of both.				

Menu text	Default setting	Setting range		Step size
		Min.	Max.	
IN>1 Function	IEC S Inverse	DT, IEC S Inverse, IEC V Inverse, IEC E inverse, UK LT Inverse IEEE M Inverse, IEEE V Inverse, IEEE E Inverse, US Inverse, US ST Inverse, IDG		
Setting for the tripping characteristic for the first stage earth fault overcurrent element.				
IN>1 Directional	Non-directional	Non-directional Directional Fwd Directional Rev		
This setting determines the direction of measurement for first stage element.				
IN>1 Current Set	0.2 x In	0.08 x In	4.0 x In	0.01 x In
Pick-up setting for first stage overcurrent element.				
IN1>1 IDG Is	1.5	1	4	0.1
This setting is set as a multiple of “IN>” setting for the IDG curve (Scandinavian) and determines the actual relay current threshold at which the element starts.				
IN>1 Time Delay	1	0	100	0.01
Setting for the time-delay for the definite time setting if selected for first stage element. The setting is available only when DT function is selected.				
IN>1 TMS	1	0.025	1.2	0.005
Setting for the time multiplier setting to adjust the operating time of the IEC IDMT characteristic.				
IN>1 Time Dial	1	0.01	100	0.01
Setting for the time multiplier setting to adjust the operating time of the IEEE/US IDMT curves. The Time Dial (TD) is a multiplier on the standard curve equation, in order to achieve the required tripping time. The reference curve is based on TD = 1. **Care:** Certain manufacturer's use a mid-range value of TD = 5 or 7, so it may be necessary to divide by 5 or 7 to achieve parity.				
IN>1 Reset Char.	DT	DT or Inverse		N/A
Setting to determine the type of reset/release characteristic of the IEEE/US curves.				
IN>1 tRESET	0 s	0 s	100 s	0.01 s
Setting that determines the reset/release time for definite time reset characteristic.				
IN1>1 IDG Time	1.2	1	2	0.01
Setting for the IDG curve used to set the minimum operating time at high levels of fault current.				
IN>2 Cells as for IN>1 above				
Setting the same as for the first stage earth fault overcurrent element.				
IN>3 Status	Enabled	Disabled, Enabled, Enabled VTS, Enabled Ch Fail, En VTSorCh Fail, En VTSandCh Fail		
Setting that defines third stage overcurrent operating status. Depending of this setting, IN>3 will be enabled permanently or in case of Voltage Transformer Supervision (fuse fail) operation, or in case of communication channel fail, or a combination (and /or) of both.				

ST

ST

Menu text	Default setting	Setting range		Step size
		Min.	Max.	
IN>3 Directional	Non-directional	Non-directional Directional Fwd Directional Rev		N/A
This setting determines the direction of measurement for the earth fault overcurrent element.				
IN>3 Current Set	10 x In	0.08 x In	32 x In	0.01 x In
Pick-up setting for third stage earth fault overcurrent element.				
IN>3 Time Delay	0 s	0 s	100 s	0.01 s
Setting for the operating time-delay for third stage earth fault overcurrent element.				
IN>4 Cells as for IN>3 Above				
Settings the same as the third stage earth fault overcurrrent element.				
IN> Blocking	00001111	Bit 0 = VTS Blocks I>1, Bit 1 = VTS Blocks I>2, Bit 2 = VTS Blocks I>3, Bit 3 = VTS Blocks I>4, Bits 5 & 6 are not used.		
Logic Settings that determine whether blocking signals from VT supervision affect certain earth fault overcurrent stages. VTS Block - only affects directional earth fault overcurrent protection. With the relevant bit set to 1, operation of the Voltage Transformer Supervision (VTS), will block the stage. When set to 0, the stage will revert to Non-directional upon operation of the VTS. If IN> Status is set 'Enabled VTS', no blocking should be selected in order to provide earth fault clearance by earth fault overcurrent protection during VTS condition.				
IN> DIRECTIONAL				
IN> Char. Angle	-60°	–95°	+95°	1°
Setting for the relay characteristic angle used for the directional decision. The setting is visible only when 'Directional Fwd' or 'Directional Rev' is set.				
IN>Pol	Zero Sequence	Zero Sequence or Neg. Sequence		N/A
Setting that determines whether the directional function uses zero sequence or negative sequence voltage polarizing.				
IN>VNpol Set	1 V	0.5 V	80 V	0.5 V
Setting for the minimum zero sequence voltage polarizing quantity for directional decision. Setting is visible only when 'Zero Sequence' polarization is set.				
IN>V2pol Set	1 V	0.5 V	25 V	0.5 V
Setting for the minimum negative sequence voltage polarizing quantity for directional decision. Setting is visible only when 'Negative Sequence' polarization is set.				
IN>I2pol Set	0.08 x In	0.08 x In	1 x In	0.01x In
Setting for the minimum negative sequence current polarizing quantity for directional decision. Setting is visible only when 'Negative Sequence' polarization is set.				

1.3.11 Aided DEF (only in models with distance option)

The column **GROUP x AIDED DEF** is used to set all parameters for operation of DEF (Directional Earth Fault aided scheme thresholds). As this configuration merely assigns pick up at the local end only, they need to be further configured to a selected Aided channel scheme under **GROUP x SCHEME LOGIC** to provide unit protection.

Menu text	Default setting	Setting range		Step size
		Min.	Max.	
DEF SCHEME				
DEF Status	Enabled	Enabled or Disabled		
To enable (activate) or disable (turn off) the Directional Earth Fault element that is used in an aided scheme (= ground overcurrent pilot scheme). This setting is invisible if disabled in 'CONFIGURATION' column.				
DEF Polarizing	Zero Sequence	Neg. Sequence or Zero Sequence		
Setting that defines the method of DEF polarization. Either zero, or negative sequence voltage can be taken as the directional reference. When Zero Sequence is selected, this arms the **Virtual Current Polarizing**.				
DEF Char Angle	-60°	-95°	95°	1°
Setting for the relay characteristic angle used for the directional decision.				
DEF VNpol Set	1 V	0.5 V	40 V	0.5 V
Setting that must be exceeded by generated neutral displacement voltage VN (= 3.Vo) in order for the DEF function to be operational. As Virtual Current Polarizing will be in force when Zero sequence polarizing is used, this setting will normally have no relevance. If the relay phase selector (delta sensitivity typically 4% In) detects the faulted phase, this will artificially generate a large VNpol, typically equal to Vn (phase-ground). Only if the phase selector cannot phase select will this setting be relevant, as VNpol will then measure true VN. The setting is invisible if 'Neg. Sequence' polarization is set.				
DEF V2pol Set	1 V	0.5 V	25 V	0.5 V
Setting that must be exceeded by generated negative sequence voltage V2 in order for the DEF function to be operational. The setting is invisible if 'Zero Sequence' polarization is set.				
DEF FWD Set	0.08 x In	0.05 x In	1 x In	0.01 x In
Setting the forward pickup current sensitivity for residual current (= 3.Io).				
DEF REV Set	0.04 x In	0.03 x In	1 x In	0.01 x In
Setting the reverse pickup current sensitivity for residual current (= 3.Io).				

ST

ST

1.3.12 Sensitive earth fault

If a system is earthed through a high impedance, or is subject to high ground fault resistance, the earth fault level will be severely limited. Consequently, the applied earth fault protection requires both an appropriate characteristic and a suitably sensitive setting range in order to be effective. A separate four-stage sensitive earth fault element is provided within the P54x relay for this purpose, which has a dedicated input.

Menu text	Default setting	Setting range		Step size
		Min.	Max.	
Sens E/F Options	SEF	SEF Enabled, Wattmetric SEF		
Setting to select the type of sensitive earth fault protection function and the type of high-impedance function to be used.				
ISEF>1 Function	DT	Disabled, DT, IEC S Inverse, IEC V Inverse, IEC E inverse, UK LT Inverse IEEE M Inverse, IEEE V Inverse, IEEE E Inverse, US Inverse, US ST Inverse, IDG		
Setting for the tripping characteristic for the first stage sensitive earth fault element.				
ISEF>1 Direction	Non-directional	Non-directional Direction Fwd Direction Rev		N/A
This setting determines the direction of measurement for the first stage sensitive earth fault element.				
ISEF>1 Current	0.05 x In_{SEF}	0.005 x In_{SEF}	0.1x In_{SEF}	0.00025 x In_{SEF}
Pick-up setting for the first stage sensitive earth fault element.				
ISEF>1 IDG Is	1.5	1	4	0.1
This setting is set as a multiple of **ISEF>** setting for the IDG curve (Scandinavian) and determines the actual relay current threshold at which the element starts.				
ISEF>1 Delay	1	0	200 s	0.01 s
Setting for the time delay for the first stage definite time element.				
ISEF>1 TMS	1	0.025	1.2	0.005
Setting for the time multiplier to adjust the operating time of the IEC IDMT characteristic.				
ISEF>1 Time Dial	1	0.1	100	0.1
Setting for the time multiplier to adjust the operating time of the IEEE/US IDMT curves.				
ISEF>1 Reset Char.	DT	DT or Inverse		N/A
Setting to determine the type of reset/release characteristic of the IEEE/US curves.				
ISEF>1 tRESET	0	0 s	100 s	0.01 s
Setting to determine the reset/release time for definite time reset characteristic.				
ISEF>1 IDG Time	1.2	1	2	0.01
Setting for the IDG curve used to set the minimum operating time at high levels of fault current.				
ISEF>2 Cells as for ISEF>1 Above				
ISEF>3 Status	Disabled	Disabled or Enabled		N/A
Setting to enable or disable the third stage definite time sensitive earth fault element.				

Menu text	Default setting	Setting range		Step size
		Min.	Max.	
ISEF>3 Direction	Non-directional	Non-directional Directional Fwd Directional Rev		N/A
This setting determines the direction of measurement for the third stage element.				
ISEF>3 Current	0.4 x In_{SEF}	0.005 x In_{SEF}	0.8 x In_{SEF}	0.001 x In_{SEF}
Pick-up setting for the third stage sensitive earth fault element.				
ISEF>3 Delay	1	0 s	200 s	0.01 s
Setting for the operating time delay for third stage sensitive earth fault element.				
ISEF>4 Cells as for ISEF>3 Above				
ISEF> Func. Link	001111	Bit 0=VTS Blks ISEF>1, Bit 1=VTS Blks ISEF>2, Bit 2=VTS Blks ISEF>3, Bit 3=VTS Blks ISEF>4, Bit 4= A/R Blks ISEF>3, Bit 5=A/R Blks ISEF>4, Bit 6=Not Used, Bit 7=Not Used		
Settings that determine whether VT supervision and auto-reclose logic signals blocks selected sensitive earth fault stages.				
ISEF DIRECTIONAL				
ISEF> Char. Angle	90°	–95°	+95°	1°
Setting for the relay characteristic angle used for the directional decision.				
ISEF>VNpol Set	5	0.5 V	88 V	0.5 V
Setting for the minimum zero sequence voltage polarizing quantity required for directional decision.				
WATTMETRIC SEF	Sub-heading in menu			
PN> Setting	9In_{SEF} W	0	20In_{SEF} W	0.05In_{SEF} W
Setting for the threshold for the wattmetric component of zero sequence power. The power calculation is as follows: The PN> setting corresponds to: Vres x Ires x Cos (ϕ – ϕc) = 9 x Vo x Io x Cos (ϕ– ϕc) Where; ϕ = Angle between the Polarizing Voltage (-Vres) and the Residual Current ϕc = Relay Characteristic Angle (RCA) Setting (ISEF> Char Angle) Vres = Residual Voltage Ires = Residual Current Vo = Zero Sequence Voltage Io = Zero Sequence Current				

ST

ST

1.3.13 Residual overvoltage (neutral voltage displacement)

The NVD element within the MiCOM P54x is of two-stage design, each stage having separate voltage and time delay settings. Stage 1 may be set to operate on either an IDMT or DT characteristic, whilst stage 2 may be set to DT only.

Menu text	Default setting	Setting range		Step size
		Min.	Max.	
VN>1 Function	DT	Disabled or DT or IDMT		N/A
Setting for the tripping characteristic of the first stage residual overvoltage element.				
VN>1 Voltage Set	5 V	1 V	80 V	1 V
Pick-up setting for the first stage residual overvoltage characteristic.				
VN>1 Time Delay	5 s	0 s	100 s	0.01 s
Operating time delay setting for the first stage definite time residual overvoltage element.				
VN>1 TMS	1	0.5	100	0.5
Setting for the time multiplier setting to adjust the operating time of the IDMT characteristic. The characteristic is defined as follows: $t = K / (M – 1)$ Where: K = Time multiplier setting t = Operating time in seconds M = Derived residual voltage/relay setting voltage (VN> Voltage Set)				
VN>1 tReset	0 s	0 s	100 s	0.01 s
Setting to determine the reset/release definite time for the first stage characteristic				
VN>2 Status	Disabled	Disabled or Enabled		N/A
Setting to enable or disable the second stage definite time residual overvoltage element.				
VN>2 Voltage Set	10 V	1 V	80 V	1 V
Pick-up setting for the second stage residual overvoltage element.				
VN>2 Time Delay	10 s	0 s	100 s	0.01 s
Operating time delay for the second stage residual overvoltage element.				

1.3.14 Thermal overload

The thermal overload function within the MiCOM P54x is capable of being selected as a single time constant or dual time constant characteristic, dependent on the type of plant to be protected.

Menu text	Default setting	Setting range		Step size
		Min.	Max.	
Characteristic	Single	Disabled, Single or Dual		
Setting for the operating characteristic of the thermal overload element.				
Thermal Trip	1 x In	0.08 x In	4 x In	0.01 x In
Sets the maximum full load current allowed and the pick-up threshold of the thermal characteristic.				
Thermal Alarm	70%	50%	100%	1%
Setting for the thermal state threshold corresponding to a percentage of the trip threshold at which an alarm will be generated.				
Time Constant 1	10 minutes	1 minute	200 minutes	1 minute
Setting for the thermal time constant for a single time constant characteristic or the first time constant for the dual time constant characteristic.				
Time Constant 2	5 minutes	1 minute	200 minutes	1 minute
Setting for the second thermal time constant for the dual time constant characteristic.				

ST

1.3.15 Voltage protection

Under and overvoltage protection included within the MiCOM P54x consists of two independent stages. The measuring mode (ph-N or ph-ph) and operating mode (any phase or 3 phase) are configurable as a combination between Stage 1 and Stage 2, therefore allowing completely independent operation for each stage.

Stage 1 may be selected as IDMT, DT or Disabled, within the **V<1 function** cell. Stage 2 is DT only and is enabled/disabled in the **V<2 status** cell.

Two stages are included to provide both alarm and trip stages, where required.

Menu text	Default setting	Setting range		Step size
		Min.	Max.	
UNDERVOLTAGE				
V< Measur't. Mode	V<1 & V<2 Ph-Ph	V<1 & V<2 Ph-Ph V<1 & V<2 Ph-N V<1Ph-Ph V<2Ph-N V<1Ph-N V<2Ph-Ph		N/A
Sets the combination of measured input voltage that will be used for the undervoltage elements. **Note:** If any stage is disabled, the associated text in the setting menu cell setting will remain visible but will not affect the operation of the stage that is enabled.				
V< Operate Mode	V<1 & V<2 Any Ph	V<1 & V<2 Any Ph V<1 & V<2 3Phase V<1AnyPh V<2 3Ph V<1 3Ph V<2AnyPh		N/A
Setting that determines whether any phase or all three phases has to satisfy the undervoltage criteria before a decision is made. **Note:** If any stage is disabled, the associated text in the setting menu cell setting will remain visible but will not affect the operation of the stage that is enabled.				

ST

Menu text	Default setting	Setting range		Step size
		Min.	Max.	
V<1 Function	DT	Disabled DT IDMT		N/A
Tripping characteristic for the first stage undervoltage function. The IDMT characteristic available on the first stage is defined by the following formula: t = K / (1 - M) Where: K = Time multiplier setting t = Operating time in seconds M = Measured voltage/relay setting voltage (V< Voltage Set)				
V<1 Voltage Set	80 V	10 V	120 V	1 V
Sets the pick-up setting for first stage undervoltage element.				
V<1 Time Delay	10 s	0 s	100 s	0.01 s
Setting for the operating time-delay for the first stage definite time undervoltage element.				
V<1 TMS	1	0.5	100	0.5
Setting for the time multiplier setting to adjust the operating time of the IDMT characteristic.				
V<1 Poledead Inh	Enabled	Enabled or Disabled		N/A
If the cell is enabled, the relevant stage will become inhibited by the pole dead logic. This logic produces an output when it detects either an open circuit breaker via auxiliary contacts feeding the relay opto inputs or it detects a combination of both undercurrent and undervoltage on any one phase. It allows the undervoltage protection to reset when the circuit breaker opens to cater for line or bus side VT applications.				
V<2 Status	Disabled	Enabled or Disabled		N/A
Setting to enable or disable the second stage undervoltage element.				
V<2 Voltage Set	60 V	10 V	120 V	1 V
This setting determines the pick-up setting for second stage undervoltage element.				
V<2 Time Delay	5 s	0 s	100 s	0.01 s
Setting for the operating time-delay for the second stage definite time undervoltage element.				
V<2 Poledead Inh	Enabled	Enabled Disabled		N/A
Similar function to V<1 Poledead Inhibit.				
OVERVOLTAGE				
V> Measur't. Mode	V<1 & V<2 Ph-Ph	V<1 & V<2 Ph-Ph V<1 & V<2 Ph-N V<1Ph-Ph V<2Ph-N V<1Ph-N V<2Ph-Ph		N/A
Sets the combination of measured input voltage that will be used for the overvoltage elements. **Note:** If any stage is disabled, the associated text in the setting menu cell setting will remain visible but will not affect the operation of the stage that is enabled.				

Menu text	Default setting	Setting range		Step size
		Min.	Max.	
V> Operate Mode	V<1 & V<2 Any Ph	V<1 & V<2 Any Ph V<1 & V<2 3Phase V<1AnyPh V<2 3Ph V<1 3Ph V<2AnyPh		N/A
Setting that determines whether any phase or all three phases has to satisfy the overvoltage criteria before a decision is made. **Note:** If any stage is disabled, the associated text in the setting menu cell setting will remain visible but will not affect the operation of the stage that is enabled.				
V>1 Function	DT	Disabled, DT or IDMT		N/A
Tripping characteristic setting for the first stage overvoltage element. The IDMT characteristic available on the first stage is defined by the following formula: t = K/(M - 1) Where: K = Time multiplier setting t = Operating time in seconds M = Measured voltage/relay setting voltage (V<>Voltage Set)				
V>1 Voltage Set	130 V	60 V	185 V	1 V
Sets the pick-up setting for first stage overvoltage element.				
V>1 Time Delay	10 s	0 s	100 s	0.01 s
Setting for the operating time-delay for the first stage definite time overvoltage element.				
V>1 TMS	1	0.5	100	0.5
Setting for the time multiplier setting to adjust the operating time of the IDMT characteristic.				
V>2 Status	Disabled	Enabled or Disabled		N/A
Setting to enable or disable the second stage overvoltage element.				
V>2 Voltage Set	150 V	60 V	185 V	1 V
This setting determines the pick-up setting for the second stage overvoltage element.				
V>2 Time Delay	0.5 s	0 s	100 s	0.01 s
Setting for the operating time-delay for the second stage definite time overvoltage element.				
COMP OVERVOLTAGE				
V1>1 Cmp Funct	DT	Disabled, DT or IDMT		N/A
Tripping characteristic setting for the first stage compensated overvoltage element. The IDMT characteristic available on the first stage is defined by the following formula: t = K/(M - 1) Where: K = Time multiplier setting t = Operating time in seconds M = Remote calculated voltage/relay setting voltage (V<>Voltage Set)				
V1>1 Cmp Vlt Set	75 V	60 V	110 V	1 V
Sets the pick-up setting for first stage overvoltage element. This is set in terms of the phase to neutral voltage.				

ST

Menu text	Default setting	Setting range		Step size
		Min.	Max.	
V1>1 Cmp Tim Dly	10 s	0 s	100 s	0.01 s
Setting for the operating time-delay for the first stage definite time compensated overvoltage element.				
V1>1 CmpTMS	1	0.5	100	0.5
Setting for the time multiplier setting to adjust the operating time of the IDMT characteristic.				
V1>2 Cmp Status	Disabled	Enabled or Disabled		N/A
Setting to enable or disable the second stage compensated overvoltage element.				
V1>2 Vlt Set	85 V	60 V	110 V	1 V
This setting determines the pick-up setting for the second stage overvoltage element.				
V1>2 CmpTim Dly	0.5 s	0 s	100 s	0.01 s
Setting for the operating time-delay for the second stage definite time compensated overvoltage element.				

ST

1.3.16 Frequency protection

The relay includes 4 stages of underfrequency and 2 stages of overfrequency protection to facilitate load shedding and subsequent restoration. The underfrequency stages may be optionally blocked by a pole dead (CB Open) condition.

Menu text	Default setting	Setting range		Step size
		Min.	Max.	
FREQ. PROTECTION GROUP 1				
UNDERFREQUENCY				
F<1 Status	Enabled	Enabled or Disabled		N/A
Setting to enable or disable the first stage underfrequency element.				
F<1 Setting	49.5 Hz	45 Hz	65 Hz	0.01 Hz
Setting that determines the pick-up threshold for the first stage underfrequency element.				
F<1 Time Delay	4 s	0 s	100 s	0.01 s
Setting that determines the minimum operating time-delay for the first stage underfrequency element.				
F<2 Status (same as stage 1)	Disabled	Enabled or Disabled		N/A
F<3 Status (same as stage 1)	Disabled	Enabled or Disabled		N/A
F<4 Status (same as stage1)	Disabled	Enabled or Disabled		N/A

Menu text	Default setting	Setting range		Step size
		Min.	Max.	
F< Function Link	0000			Bit 0 F<1 U/V Block Bit 1 F<2 U/V Block Bit 2 F<3 U/V Block Bit 3 F<4 U/V Block
Settings that determines whether undervoltage level (setting CB FAIL & P.DEAD/POLEDEAD VOLTAGE/V<) signal block the underfrequency elements.				
OVERFREQUENCY				
F>1 Status	Enabled	Enabled or Disabled		N/A
Setting to enable or disable the first stage overfrequency element.				
F>1 Setting	50.5 Hz	45 Hz	65 Hz	0.01 Hz
Setting that determines the pick-up threshold for the first stage overfrequency element.				
F>1 Time Delay	2 s	0 s	100 s	0.01 s
Setting that determines the minimum operating time-delay for the first stage overfrequency element.				
F>2 Status (same as stage1 above)	Disabled	Enabled or Disabled		N/A

ST

1.3.17 Independent rate of change of frequency protection

The relay provides four independent stages of rate of change of frequency protection (df/dt+t). Depending upon whether the rate of change of frequency setting is set positive or negative, the element will react to rising or falling frequency conditions respectively, with an incorrect setting being indicated if the threshold is set to zero.

Menu text	Default setting	Setting range		Step size
		Min.	Max.	
DF/DT PROTECTION GROUP 1				
df/dt Avg. Cycles	6	6	12	6
This setting is available for calculating the rate of change of frequency measurement over a fixed period of either 6 or 12 cycles.				
df/dt>1 Status	Enabled	Enabled or Disabled		N/A
Setting to enable or disable the first stage df/dt element.				
df/dt>1 Setting	2.000 Hz/s	100.0 mHz/s	10 Hz/s	100 mHz/s
Pick-up setting for the first stage df/dt element.				
df/dt>1 Dir'n.	Negative	Negative/Positive/Both		N/A
This setting determines whether the element will react to rising or falling frequency conditions respectively, with an incorrect setting being indicated if the threshold is set to zero.				
df/dt>1 Time	500.0 ms	0	100	10 ms
Minimum operating time-delay setting for the first stage df/dt element.				

Menu text	Default setting	Setting range		Step size
		Min.	Max.	
df/dt>2 Status (same as stage1)	Enabled	Enabled or Disabled		N/A
df/dt>3 Status (same as stage 1)	Enabled	Enabled or Disabled		N/A
df/dt>4 Status (same as stage1)	Enabled	Enabled or Disabled		N/A

1.3.18 Circuit breaker fail and pole dead detection function

The CB Fail function consists of a two-stage circuit breaker fail function that can be initiated by:

- Current based protection elements
- Voltage based protection elements
- External protection elements.

ST

For current-based protection, the reset condition is based on undercurrent operation to determine that the CB has opened. For the non-current based protection, the reset criteria may be selected by means of a setting for determining a CB Failure condition.

It is common practice to use low set undercurrent elements in protection relays to indicate that circuit breaker poles have interrupted the fault or load current, as required.

The Pole Dead detection consists of a two user settable level detectors:

1. Undercurrent
2. Undervoltage

The undercurrent setting is shared with CB Fail protection. Both, undercurrent and undervoltage settings are also used for CNV (Current No Volt) function in TOC protection.

Menu text	Default setting	Setting range		Step size
		Min.	Max.	
CB FAIL & P.DEAD				
BREAKER FAIL				
CB Fail 1 Status	Enabled	Enabled or Disabled		
Setting to enable or disable the first stage of the circuit breaker function.				
CB Fail 1 Timer	0.2 s	0 s	10 s	0.01 s
Setting for the circuit breaker fail timer stage 1, during which breaker opening must be detected. There are timers per phase to cope with evolving faults, but the timer setting is common.				
CB Fail 2 Status	Disabled	Enabled or Disabled		
Setting to enable or disable the second stage of the circuit breaker function.				
CB Fail 2 Timer	0.4 s	0 s	10 s	0.01 s
Setting for the circuit breaker fail timer stage 2, during which breaker opening must be detected.				
Volt Prot. Reset	Prot. Reset & I<	I< Only, CB Open & I<, Prot. Reset & I<		
Setting which determines the elements that will reset the circuit breaker fail time for voltage protection function initiated circuit breaker fail conditions.				

Menu text	Default setting	Setting range		Step size
		Min.	Max.	
Ext. Prot. Reset	Prot. Reset & I<	I< Only, CB Open & I<, Prot. Reset & I<		
Setting which determines the elements that will reset the circuit breaker fail time for external protection function initiated circuit breaker fail conditions.				
WI Prot. Reset	Disabled	Disabled or Enabled		
When Enabled, CB Fail timers will be reset by drop off of a weak infeed trip condition, providing that WI trip logic is activated.				
UNDERCURRENT				
I< Current Set	0.05 x In	0.02 x In	3.2 x In	0.01 x In
Setting that determines the circuit breaker fail timer reset current for overcurrent based protection circuit breaker fail initiation. This setting is also used in the pole dead logic to determine the status of the pole (dead or live).				
ISEF< Current	0.02x In_{SEF}	0.001x In_{SEF}	0.8x In_{SEF}	0.00005 x In
Setting that determines the circuit breaker fail timer reset current for Sensitive earth fault (SEF) protection circuit breaker fail initiation.				
POLEDEAD VOLTAGE				
V<	38.10 V	10 V	40 V	0.1 V

ST

1.3.19 Supervision (VTS, CTS, Inrush detection and special weak infeed blocking)

The VTS feature within the relay operates on detection of negative phase sequence (nps) voltage without the presence of negative phase sequence current.

The CT supervision feature operates on detection of derived zero sequence current, in the absence of corresponding derived zero sequence voltage that would normally accompany it.

The Special Weak Infeed Blocking is not normally applied, and is described in detail later in this service manual.

Menu text	Default setting	Setting range		Step size
		Min.	Max.	
VT SUPERVISION				
VTS Mode	Measured + MCB	Measured + MCB, Measured Only or MCB Only		
Setting that determines the method to be used to declare VT failure.				
VTS Status	Blocking	Disabled, Blocking, Indication		
This setting determines whether the following operations will occur upon detection of VTS. • VTS set to provide alarm indication only. • Optional blocking of voltage dependent protection elements. • Optional conversion of directional overcurrent elements to non-directional protection (available when set to blocking mode only). These settings are found in the function links cell of the relevant protection element columns in the menu.				
VTS Reset Mode	Manual	Manual, Auto		
The VTS block will be latched after a user settable time delay 'VTS Time Delay'. Once the signal has latched then two methods of resetting are available. The first is manually via the front panel interface (or remote communications) and secondly, when in 'Auto' mode, provided the VTS condition has been removed and the 3 phase voltages have been restored above the phase level detector settings for more than 240 ms.				

ST

Menu text	Default setting	Setting range		Step size
		Min.	Max.	
VTS Time Delay	5 s	1 s	10 s	0.1 s
Setting that determines the operating time-delay of the element upon detection of a voltage supervision condition.				
VTS I> Inhibit	10 x In	0.08 x In	32 x In	0.01 x In
The setting is used to override a voltage supervision block in the event of a phase fault occurring on the system that could trigger the voltage supervision logic.				
VTS I2> Inhibit	0.05 x In	0.05 x In	0.5 x In	0.01 x In
The setting is used to override a voltage supervision block in the event of a fault occurring on the system with negative sequence current above this setting which could trigger the voltage supervision logic.				
INRUSH DETECTION				
I> 2nd Harmonic	20%	10%	100%	5%
If the level of second harmonic in any phase current or neutral current exceeds the setting, inrush conditions will be recognized by changing the status of four DDB signals from low to high in the Programmable Scheme Logic (PSL). The user then has a choice to use them further in the PSL in accordance with the application.				
WEAK INFEED BLK				
WI Inhibit	Disabled	Disabled or Enabled		
This setting enables (turns on) or disables (turns off) a special feature to cover scenarios when there is a very weak positive or negative sequence source behind the relay, but the zero sequence infeed is large. Special to stub-end transformer feeding, where the stub end has no generation, but has solid earthing at a Yd transformer neutral.				
I0/I2 Setting	3	2	3	0.1
If the ratio of zero sequence current to negative sequence current exceeds the setting, all protection elements such as Distance, DEF and Delta that could potentially operate during a genuine weak infeed condition will be inhibited. This setting will be visible only if 'WI Inhibit' is enabled.				
CT SUPERVISION (CTS)				
CTS Mode	Disabled	Disabled, Standard, I Diff, Idiff + Standard		N/A
Setting to disable, enable the standard (voltage dependant) CTS or enable the Differential (current based, communication dependant) CTS or allow both CTS algorithms to work simultaneously				
CTS Status	Restrain	Restrain, Indication		
This setting determines whether the following operations will occur upon detection of CTS. • CTS set to provide alarm indication only. • CTS set to restrain local protection **Note:** The setting applies to both CTS algorithms. The settings are visible if CTS Mode is not disabled.				
CTS Reset Mode	Manual	Manual or Auto		
The CTS block will be latched after a user settable time delay 'CTS Time Delay'. Once the signal has latched then two methods of resetting are available. The first is manually via the front panel interface (or remote communications) and secondly, when in 'Auto' mode, provided the CTS condition has been removed. The setting is common for both CTS algorithms. The setting is visible if CTS Mode is not disabled.				

Menu text	Default setting	Setting range		Step size
		Min.	Max.	
CTS Time Delay	5 s	0 s	10 s	1 s
Setting that determines the operating time-delay of the element upon detection of a current transformer supervision condition. The setting is common for both CTS algorithms. The setting is visible if CTS Mode is not disabled				
CTS VN< Inhibit	5 V	0.5 V	22 V	0.5 V
This setting is used to inhibit the current transformer supervision element should the zero sequence voltage exceed this setting. The setting is visible if 'Standard' or 'Standard' + 'I Diff' CTS Mode is chosen.				
CTS IN> Set	0.1 x In	0.08 x In	4 x In	0.01 x In
This setting determines the level of zero sequence current that must be present for a valid current transformer supervision condition. The setting is visible if 'Standard' or 'Standard' + 'I Diff' CTS Mode is chosen.				
CTS i1>	0.1*In	0.05*In	4.0*In	0.01*In
Setting that determines if the circuit is loaded. If the positive sequence current calculated by the relay exceed this value, the relay declares load condition at relay end. The setting is visible if 'I Diff' or 'Standard' + 'I Diff' CTS Mode is set.				
CTS i2/i1>	0.05	0.05	1	0.01
Setting above which an asymmetrical fault condition or a CT problem is declared. The setting is visible if 'I Diff' or 'Standard' + 'I Diff' CTS Mode is set.				
CTS i2/i1>>	0.4	0.05	1	0.01
Setting above which a CT failure is declared providing that CTS i2/i1> threshold at any other CT set connected to the differential zone relay has not been exceed. The setting is visible if 'I Diff' or 'Standard' + 'I Diff' CTS Mode is set.				

ST

1.3.20 System checks (check sync. function)

The MiCOM P54x has a two stage Check Synchronization function that can be set independently.

1.3.20.1 System checks (check sync. function) (P543/P545)

The MiCOM P543/P545 has a two stage Check Synchronization function that can be set independently.

Menu text	Default setting	Setting range		Step size
		Min.	Max.	
VOLTAGE MONITORING				
Live Voltage	32 V	1 V	132 V	0.5 V
Sets the minimum voltage threshold above which a line or bus is to be recognized as being 'Live'.				
Dead Voltage	13 V	1 V	132 V	0.5 V
Sets the voltage threshold below which a line or bus to be recognized as being 'Dead'.				
CHECK SYNC.				
Stage 1	Enabled	Enabled or Disabled		
Setting to enable or disable the first stage check sync. element.				
CS1 Phase Angle	20°	0°	90°	1°
Sets the maximum phase angle difference between the line and bus voltage for the first stage check sync. element phase angle criteria to be satisfied.				

ST

Menu text	Default setting	Setting range		Step size
		Min.	Max.	
CS1 Slip Control	Frequency	Frequency/Both/Timer/None		
Setting that determines whether slip control is by slip frequency only, frequency + timer or timer only criteria to satisfy the first stage check sync. conditions. If slip control by timer or frequency + timer is selected, the combination of phase angle and timer settings determines an effective maximum slip frequency, calculated as: $\frac{2 \times A}{T \times 360}$ Hz. for Check Sync. 1, or Where: A = Phase angle setting (°) T = Slip timer setting (seconds)				
CS1 Slip Freq.	50 mHz	10 mHz	1 Hz	10 mHz
Sets the maximum frequency difference between the line and bus voltage for the first stage check sync. element slip frequency to be satisfied.				
CS1 Slip Timer	1 s	0 s	99 s	0.01 s
Minimum operating time-delay setting for the first stage check sync. element.				
CS2 Status	Enabled	Enabled or Disabled		
Setting to enable or disable the second stage check sync. element.				
CS2 Phase Angle	20°	0°	90°	1°
Sets the maximum phase angle difference between the line and bus voltage for the second stage check sync. element phase angle criteria to be satisfied.				
CS2 Slip Control	Frequency	Frequency/Both/Timer/None		
Setting that determines whether slip control is by slip frequency only, frequency + timer or timer only criteria to satisfy the CS1 conditions. If Slip Control by Timer or Frequency + Timer is selected, the combination of Phase Angle and Timer settings determines an effective maximum slip frequency, calculated as: $\frac{A}{T \times 360}$ Hz. for Check Sync. 2, or Where: A = Phase angle setting (°) T = Slip timer setting (seconds) Unlike Check Sync. 1, Check Sync. 2 only permits closure for decreasing angles of slip, therefore the circuit breaker should always close within the limits defined by Check Sync. 2.				
CS2 Slip Freq.	50 mHz	10 mHz	1 Hz	10 mHz
Slip frequency setting for the second stage check sync. element.				
CS2 Slip Timer	1 s	0 s	99 s	0.01 s
Setting for the second stage Check Sync. slip timer.				
CS Undervoltage	54 V	10 V	132 V	0.5 V
Sets an undervoltage threshold above which the line and bus voltage must be to satisfy the Check Sync. condition if selected in the ‘CS Voltage Block’ cell.				

Menu text	Default setting	Setting range		Step size
		Min.	Max.	
CS Overvoltage	130 V	60 V	185 V	0.5 V
Sets an overvoltage threshold above below which the line and bus voltage must be to satisfy the Check Sync. condition if selected in the 'CS Voltage Block' cell.				
CS Diff. Voltage	6.5 V	1 V	132 V	0.5 V
Sets the voltage magnitude threshold between the line and bus volts below that the line and bus voltage difference must be to satisfy the Check Sync. condition if selected in the 'CS Voltage Block' cell.				
CS Voltage Block	V<	V</V>/Vdiff.>/V< and V>/V< and Vdiff>/ V> and Vdiff>/V< V> and Vdiff>/None		
Selects whether an undervoltage, overvoltage and voltage difference thresholds for the line and bus voltages must be satisfied in order for the Check Sync. conditions to be satisfied.				
SYSTEM SPLIT				
SS Status	Enabled	Enabled or Disabled		
Setting to enable or disable the system split function - to detect a line and bus which are not possible to synchronize.				
SS Phase Angle	120°	90°	175°	1°
Sets the maximum phase angle difference between the line and bus voltage, which must be exceeded, for the System Split condition to be satisfied.				
SS Under V Block	Enabled	Enabled or Disabled		
Activates and undervoltage block criteria.				
SS Undervoltage	54 V	10 V	132 V	0.5 V
Sets an undervoltage threshold above which the line and bus voltage must be to satisfy the System Split condition.				
SS Timer	1 s	0 s	99	0.01 s
The System Split output remains set for as long as the System Split criteria are true, or for a minimum period equal to the System Split Timer setting, whichever is longer.				

ST

1.3.20.2 System checks (check sync. function) (P544/P546)

The MiCOM P544/P546 has a two stage Check Synchronization function that can be set independently for each circuit breaker.

Menu text	Default setting	Setting range		Step size
		Min.	Max.	
VOLTAGE MONITORS				
Live Line	32 V	5 V	132 V	0.5 V
Line is considered **Live** with voltage above this setting.				
Dead Line	13 V	5 V	132 V	0.5 V
Line is considered **Dead** with voltage below this setting.				
Live Bus 1	32 V	5 V	132 V	0.5 V
Bus 1 is considered **Live** with voltage above this setting.				
Dead Bus 1	1 3 V	5 V	132 V	0.5 V
Bus 1 is considered **Dead** with voltage below this setting.				

ST

Menu text	Default setting	Setting range		Step size
		Min.	Max.	
Live Bus 2	32 V	5 V	132 V	0.5 V
Bus 2 is considered **Live** with voltage above this setting.				
Dead Bus 2	13 V	5 V	132 V	0.5 V
Bus 2 is considered **Dead** with voltage below this setting.				
CS UV	54 V	5 V	120 V	0.5 V
Check Synch Undervoltage setting decides that System Check Synchronism logic for CB1 will be blocked if **V<** is one of the selected options in setting **CB1 CS Volt.Blk** (48 8 E), and either line or bus voltage is below this setting. System Check Synchronism for CB2 will be blocked if **V<** is one of the selected options in setting **CB2 CS Volt. Blk** (48 9 C), and either line or bus voltage is below this setting.				
CS OV	130 V	60 V	200 V	0.5 V
Check Synch Overvoltage setting decides that System Check Synchronism logic for CB1 is blocked if **V>** is one of the selected options in setting **CB1 CS Volt.Blk** (48 8 E), and either line or bus voltage is above this setting. System Check Synchronism for CB2 is blocked if **V>** is one of the selected options in setting **CB2 CS Volt. Blk** (48 9 C), and either line or bus voltage is above this setting.				
Sys Checks CB1	Disabled	Enabled or Disabled		
Setting to enable or disable both stages of system checks for reclosing CB1 If System Checks CB1 is set to **Disabled**, all other menu settings associated with synchronism checks for CB1 become invisible, and a DDB (880) signal **SChksInactiveCB1** is set.				
CB1 CS Volt. Blk	V<	V< , V> , Vdiff.> , V< and V>, V< and Vdiff> , V> and Vdiff> , V< V> and Vdiff> , None		
Setting to determine which, if any, conditions should block synchronism check for CB1 (undervoltage **V<**, overvoltage **V>**, and/or voltage differential **Vdiff** etc) for the line and bus voltages.				
CB1 CS1 Status	Enabled	Enabled or Disabled		
Setting to enable or disable the stage 1 synchronism check elements for auto-reclosing and manual closing CB1.				
CB1 CS1 Angle	20°	0°	90°	1°
Maximum permitted phase angle between Line and Bus 1 voltages for first stage synchronism check element to reclose CB1.				
CB1 CS1 VDiff	6.5 V	1 V	120 V	0.5 V
Check Synch Voltage differential setting decides that stage 1 System Check Synchronism logic for CB1 is blocked if **Vdiff>** is one of the selected options in setting **CB1 CS Volt.Blk** (48 8 E), and voltage magnitude difference between line and bus 1 voltage is above this setting.				
CB1 CS1 SlipCtrl	Enabled	Enabled or Disabled		
Setting to enable or disable blocking of synchronism check stage 1 for reclosing CB1 by excessive frequency difference (slip) between line and bus voltages (refer to setting **CB1 CS1 SlipFreq**).				
CB1 CS1 SlipFreq	50 mHz	5 mHz	2 Hz	5 mHz
If **CB1 CS1 Slip Ctrl** is enabled, synchronism check stage 1 is blocked for reclosing CB1 if measured frequency difference between line and bus voltages is greater than this setting.				

Menu text	Default setting	Setting range		Step size
		Min.	Max.	
CB1 CS2 Status	Disabled	Enabled or Disabled		
Setting to enable or disable the stage 2 synchronism check elements for auto-reclosing and manual closing CB1.				
CB1 CS2 Angle	20°	0°	90°	1°
Maximum permitted phase angle between Line and Bus 1 voltages for second stage synchronism check element to reclose CB1				
CB1 CS2 VDiff	6.5 V	1 V	120 V	0.5 V
Check Synch Voltage differential setting decides that stage 2 System Check Synchronism logic for CB1 is blocked if **Vdiff>** is one of the selected options in setting **CB1 CS Volt.Blk** (48 8 E), and voltage magnitude difference between line and bus 1 voltage is above this setting.				
CB1 CS2 SlipCtrl	Enabled	Enabled or Disabled		
Setting to enable or disable blocking of synchronism check stage 2 for reclosing CB1 by excessive frequency difference (slip) between line and bus voltages (refer to setting **CB1 CS2 SlipFreq**)				
CB1 CS2 SlipFreq	50 mHz	5 mHz	2 Hz	5 mHz
If **CB1 CS2 Slip Ctrl** is enabled, synchronism check stage 2 is blocked for reclosing CB1 if measured frequency difference between line and bus voltages is greater than this setting.				
CB1 CS2 Adaptive	Disabled	Enabled or Disabled		
Setting to enable or disable **Adaptive CB closing** with System Check Synchronism stage 2 closing for CB1: logic uses set **CB1 Cl Time** to issue CB1 close command at such a time that the predicted phase angle difference when CB1 main contacts touch is as close as possible to 0 degrees. If Adaptive closing is disabled, the logic issues CB1 close command as soon as phase angle comes within set limit at **CB1 CS2 Angle** .				
CB1 Cl Time	50.0 ms	10.0 ms	0.5 s	1.0 ms
This sets CB1 closing time, from receipt of CB1 close command until main contacts touch.				
Sys Checks CB2	Disabled	Enabled or Disabled		
Setting to enable or disable both stages of system checks for reclosing CB2. If System Checks CB2 is set to **Disabled**, all other menu settings associated with synchronism checks for CB2 become invisible, and a DDB (1484) signal **SChksInactiveCB2** is set.				
CB2 CS Volt. Blk	V<	V< , V> , Vdiff.> , V< and V>, V< and Vdiff> , V> and Vdiff> , V< V> and Vdiff> , None		
Setting to determine which, if any, conditions should block synchronism check for CB2 (undervoltage V<, overvoltage V>, and/or voltage differential Vdiff etc) for the line and bus voltages.				
CB2 CS1 Status	Enabled	Enabled or Disabled		
Setting to enable or disable the stage 1 synchronism check elements for auto-reclosing and manual closing CB2.				
CB2 CS1 Angle	20°	0°	90°	1°
Maximum permitted phase angle between Line and Bus 2 voltages for first stage synchronism check element to reclose CB2.				

ST

ST

Menu text	Default setting	Setting range		Step size
		Min.	Max.	
CB2 CS1 Vdiff	6.5 V	1 V	120 V	0.5 V
Check Synch Voltage differential setting decides that stage 1 System Check Synchronism logic for CB2 is blocked if **Vdiff>** is one of the selected options in setting **CB2 CS Volt.Blk** (48 9 C), and voltage magnitude difference between line and bus 2 voltage is above this setting.				
CB2 CS1 SlipCtrl	Enabled	Enabled or Disabled		
Setting to enable or disable blocking of synchronism check stage 1 for reclosing CB2 by excessive frequency difference (slip) between line and bus voltages (refer to setting **CB2 CS1 SlipFreq**).				
CB2 CS1 SlipFreq	50 mHz	5 mHz	2 Hz	5 mHz
If **CB2 CS1 Slip Ctrl** is enabled, synchronism check stage 1 is blocked for reclosing CB2 if measured frequency difference between line and bus voltages is greater than this setting.				
CB2 CS2 Status	Disabled	Enabled or Disabled		
Setting to enable or disable the stage 2 synchronism check elements for auto-reclosing and manual closing CB2.				
CB2 CS2 Angle	20°	0°	90°	1°
Maximum permitted phase angle between Line and Bus 2 voltages for second stage synchronism check element to reclose CB2.				
CB2 CS2 Vdiff	6.5 V	1 V	120 V	0.5 V
Check Synch Voltage differential setting decides that stage 2 System Check Synchronism logic for CB2 is blocked if **Vdiff>** is one of the selected options in setting **CB2 CS Volt.Blk** (48 9 C), and voltage magnitude difference between line and bus 2 voltage is above this setting.				
CB2 CS2 SlipCtrl	Enabled	Enabled or Disabled		
Setting to enable or disable blocking of synchronism check stage 2 for reclosing CB2 by excessive frequency difference (slip) between line and bus voltages (refer to setting **CB2 CS2 SlipFreq**)				
CB2 CS2 SlipFreq	50 mHz	5 mHz	2 Hz	5 mHz
If **CB2 CS2 Slip Ctrl** is enabled, synchronism check stage 2 is blocked for reclosing CB2 if measured frequency difference between line and bus voltages is greater than this setting.				
CB2 CS2 Adaptive	Disabled	Enabled or Disabled		
Setting to enable or disable **Adaptive CB closing** with System Check Synchronism stage 2 closing for CB2: logic uses set **CB2 Cl Time** to issue CB2 close command at such a time that the predicted phase angle difference when CB2 main contacts touch is as close as possible to 0 degrees. If adaptive closing is disabled, the logic issues CB2 close command as soon as phase angle comes within set limit at **CB2CS2 Angle**.				
CB2 Cl Time	50.0 ms	10.0 ms	0.5 s	1.0 ms
This sets CB2 closing time, from receipt of CB2 close command until main contacts touch				
MAN SYS CHECKS				
Num CBs	CB1 only	CB1 only, CB2 only, CB1 & CB2		
This setting is only visible if the **CB Control by** cell (Cell 0701 under CB CONTROL column) is 'Enabled'. If visible, the setting dictates which of the circuit breakers (CB1 only, CB2 only, or both CB1 & CB2) can be manually closed.				

Menu text	Default setting	Setting range		Step size
		Min.	Max.	
CB1M SC required	Disabled	Enabled or Disabled		
This setting determines whether a system check (e.g. live bus / dead line etc) is required for any manual (operator-controlled) closure of CB1. If Enabled, system check is required for closure. If Disabled, system check is not required.				
CB1M SC CS1	Disabled	Enabled or Disabled		
This setting enables CB1 to close by manual control when the system satisfies all the System Check Synchronism Stage 1 conditions as listed under the setting **CB1 CS1 Status** in the SYSTEM CHECKS column.				
CB1M SC CS2	Disabled	Enabled or Disabled		
This setting enables CB1 to close by manual control when the system satisfies all the System Check Synchronism Stage 2 conditions as listed under the setting **CB1 CS2 Status** in the SYSTEM CHECKS column.				
CB1M SC DLLB	Disabled	Enabled or Disabled		
This setting enables CB1 to close by manual control when the **dead line** & **live bus1** conditions are satisfied as set in the SYSTEM CHECKS column.				
CB1M SC LLDB	Disabled	Enabled or Disabled		
This setting enables CB1 to close by manual control when the **live lin**e & **dead bus1** conditions are satisfied as set in the SYSTEM CHECKS column.				
CB1M SC DLDB	Disabled	Enabled or Disabled		
This setting enables CB1 to close by manual control when the **dead line** & **dead bus1** conditions are satisfied as set in the SYSTEM CHECKS column.				
CB2M SC required	Disabled	Enabled or Disabled		
This setting determines whether a system check (e.g. **live bus** / **dead line** etc) is required for any manual (operator-controlled) closure of CB2. If **Enabled**, system check is required for closure. If **Disabled**, system check is not required.				
CB2M SC CS1	Disabled	Enabled or Disabled		
This setting enables CB2 to close by manual control when system satisfies all the System Check Synchronism Stage 1 conditions as listed under the setting **CB2 CS1 Status** in the SYSTEM CHECKS column.				
CB2M SC CS2	Disabled	Enabled or Disabled		
This setting enables CB2 to close by manual control when the system satisfies all the System Check Synchronism Stage 2 conditions as listed under setting **CB2 CS2 statu**s in the SYSTEM CHECKS column.				
CB2M SC DLLB	Disabled	Enabled or Disabled		
This setting enables CB2 to close by manual control when the **dead line** & **live bus2** conditions are satisfied as set in the SYSTEM CHECKS column.				
CB2M SC LLDB	Disabled	Enabled or Disabled		
This setting enables CB2 to close by manual control when the **live line** & **dead bus2** conditions are satisfied as set in the SYSTEM CHECKS column.				
CB2M SC DLDB	Disabled	Enabled or Disabled		
This setting enables CB2 to close by manual control when the **dead line** & **dead bus2** conditions are satisfied as set in the SYSTEM CHECKS column.				

ST

1.3.21 Auto-reclose function

The auto-reclose functionality differs between the P543/P545 and the P544/P546 since the P543/P545 can only control one circuit breaker, whereas the P544/P546 can control two. Accordingly, therefore, the settings are different for the two.

1.3.21.1 Auto-reclose function (P543/P545)

The MiCOM P543/P545 will initiate auto-reclose for fault clearances by any instantaneous trip allocated in the PSL to DDB Trip Inputs A,B or C (DDB 530,531 or 532 respectively). The default PSL includes differential trip, Zone 1 trip and aided trips. In addition, other distance zones, Aided DEF, Directional comparison, phase and earth overcurrent protection and Trip On Reclose (TOR) may be set to initiate auto-reclose, when required. This is done in the settings (shown here after). Protection such as voltage, frequency, thermal etc. will block auto-reclose.

The following shows the relay settings for the auto-reclose function, which must be set in conjunction with the Circuit Breaker Control settings under main Menu. The available setting ranges and factory defaults are shown:

Menu text	Default setting	Setting range		Step size
		Min.	Max.	
Single Pole Shot	1	1	4	1
Sets the number of auto-reclose shots/cycles applicable for single phase faults. **Care:** <u>This setting also applies when auto-reclose is configured in 3 pole tripping applications</u>**.** Even though the trip mode may be 3 pole only, the fact that the *initiation* was a single phase fault type is memorized. In single pole tripping applications, for a setting of “N” shots, the full cycle will allow one single pole trip and reclosure, plus (N-1) subsequent three phase shots. When the number of recurrent single pole faults exceeds the setting, the AR will lockout.				
Three Pole Shot	1	1	4	1
Sets the number of auto-reclose shots/cycles applicable for a multiphase fault. Where the phase selector has identified more than one faulted phase, or has been unable to phase select only a single phase, the applicable sequence is **3 Pole**. When the number of 3ph trips exceeds the setting, the AR will lock out.				
1 Pole Dead Time	0.5 s	0.05 s	5 s	0.01 s
Sets the dead time (CB open interval) for a single pole auto-reclose cycle, first shot.				
Dead Time 1	0.3 s	0.05 s	30 s	0.01 s
Sets the dead time for the first auto-reclose cycle, except where a single pole trip has occurred.				
Dead Time 2	60 s	1 s	1800 s	1 s
Sets the dead time for the second auto-reclose cycle.				
Dead Time 3	60 s	1 s	3600 s	1 s
Sets the dead time for the third auto-reclose cycle.				
Dead Time 4	60 s	1 s	3600 s	1 s
Sets the dead time for the fourth auto-reclose cycle.				
CB Healthy Time	5 s	1 s	3600 s	1 s
If on completion of the dead time, the **CB Healthy** input is low, and remains low for a period given by the **CB Healthy Time** timer, lockout will result and the circuit breaker will remain open.				

Menu text	Default setting	Setting range		Step size
		Min.	Max.	
Reclaim Time	180 s	1 s	600 s	1 s
Sets the auto-reclose reclaim timer – the time after which the sequence counter will reset to zero.				
AR Inhibit Time	5 s	0.01 s	600 s	0.01 s
With this setting, auto-reclose initiation is inhibited for a period equal to setting **A/R Inhibit Time** following a manual circuit breaker closure.				
Check Sync Time	5 s	0.01 s	9999 s	0.01 s
Time window during which set System Check conditions must be satisfied for a successful reclose. If not, AR will lockout after time has elapsed.				
Z2T AR	Block AR	No action, Block AR or Initiate AR		
Setting that determines impact of time delayed zone 2 on AR operation. Set **Initiate AR** if the trip should initiate a cycle, and **Block AR** if a time delayed trip should cause lockout. Set **No action** if Zone 2 tripping should exert no specific logic control on the re-closer. (Only in models with distance option)				
Z3T AR	Block AR	No action, Block AR or Initiate AR		
Similar application to Z3T AR. Selection for Zone 3 trips. (Only in models with distance option)				
ZPT AR	Block AR	No action, Block AR or Initiate AR		
Similar application to ZPT AR. Selection for Zone 3 trips. (Only in models with distance option)				
Z4T AR	Block AR	No action, Block AR or Initiate AR		
Similar application to Z4T AR. Selection for Zone 4 trips. (Only in models with distance option)				
DEF Aided AR	Block AR	Block AR or Initiate AR		
Setting that determines impact of aided Directional Earth Fault protection (DEF) on AR operation. (Only in models with distance option)				
Dir Aided AR	Block AR	Block AR or Initiate AR		
Setting that determines impact of aided Directional Comparison protection (DEF) on AR operation. (Only in models with distance option)				
TOR AR	Block AR	Block AR or Initiate AR		
Setting that determines impact of Trip On Reclose (TOR) on AR operation. (Only in models with distance option)				
I>1 AR	No Action	No action, Block AR or Initiate AR		
Setting that determines impact of the first stage overcurrent protection on AR operation.				
I>2 to I>4 Cells as for I>1 Above				
IN>1 AR	No Action	No action, Block AR or Initiate AR		
Setting that determines impact of the first stage earth fault overcurrent protection on AR operation.				

ST

ST

Menu text	Default setting	Setting range		Step size
		Min.	Max.	
IN>2 to IN>4 Cells as for IN>1 Above				
Mult Phase AR	BAR 3 Phase	BAR 3 Phase/BAR 2 and 3 Phase/Allow AR		
Setting that determines impact of any multiphase fault on AR operation. If, for example, 'BAR 2 and 3 Phase' is selected, the AR will be blocked for any multiphase fault. If 'BAR 3 Phase' is selected, the AR will be blocked only for faults affecting all three phases together (A-B-C). The 'Allow AR' selection is used where all faulted phase combinations may be permitted to initiate an auto-reclose sequence.				
Dead Time Start	Protection Operation	Protection Operation or Protection Reset		N/A
Setting that determines whether the dead time is started when the protection operates or when the protection trip command resets.				
Discrim. Timer	0.1 s	0.1 s	5 s	0.01 s
Pick up time delay after which any evolving fault during the dead time will be considered as a second (new) fault. If an evolving fault occurs while the timer is still running, the force 3 ph trip internal signal will be issued and the '1 Pole Dead Time' that is running following the initial single pole trip will stop and start 'Dead Time 1' instead.				
ISEF>1 AR	No Action	No action, Block AR or Initiate AR		
Setting that determines impact of the first stage sensitive earth fault overcurrent protection on AR operation.				
ISEF>2 to ISEF>4 Cells as for ISEF>1 Above				
SYSTEM CHECKS				
CS1 Close Enable	Disabled	Enabled or Disabled		N/A
Enables auto-reclose with check synchronization. Only allows auto-reclose when the system satisfies the **Check Sync. Stage 1** settings.				
CS2 Close Enable	Disabled	Enabled or Disabled		N/A
Enables auto-reclose with check synchronization. Only allows auto-reclose when the system satisfies the **Check Sync. Stage 2** settings				
LiveLine/Dead Bus	Disabled	Enabled or Disabled		N/A
Enables auto-reclose with Live (**hot**) line and Dead busbar.				
DeadLine/LiveBus	Disabled	Enabled or Disabled		N/A
Enables auto-reclose with Dead line and Live (**hot**) busbar.				
DeadLine/Dead Bus	Disabled	Enabled or Disabled		N/A
Enables auto-reclose with Dead line and Dead busbar.				
C/S AR Immediate	Disabled	Enabled or Disabled		N/A
When enabled this setting allows the set dead time to be bypassed, by implementing a repeat re-closer function. Provided that both line ends have cleared the fault, the line will have gone dead. If the line is then energized from the remote end first, the line will become live again. On detection of a live line, in synchronism with the local bus, immediate re-closing can be permitted.				
Sys. Chk. on Shot 1	Enabled	Enabled or Disabled		N/A
Can be used to disable system checks on the first auto-reclose shot.				

1.3.21.2 Auto-reclose function (P544/P546)

The MiCOM P544/P546can be set to initiate auto-reclose for fault clearances by Zone 1 trips, phase differential trips, distance aided trips, other distance zones, Aided DEF, Directional comparison, phase and earth overcurrent protection and Trip On Reclose (TOR). This is configured in the settings (shown here after). Other protection functions such as voltage, frequency, thermal etc. will block auto-reclose.

The following shows the relay settings for the auto-reclose function, which must be set in conjunction with the Circuit Breaker Control settings under main Menu. The available setting ranges and factory defaults are shown:

Menu text	Default setting	Setting range		Step size
		Min.	Max.	
Num CBs	CB1 Only	CB1 only, CB2 only, Both CB1 & CB2		
Setting defines which CB(s) are active for the specific installation: **CB1 only**, **CB2 only** or **both CB1 & CB2**.				
Lead/Foll AR Mode	L3P F3P	L1P F1P, L1P F3P, L3P F3P, L1/3P F1/3P, L1/3P F3P, Opto.		
Setting determines which auto-reclose modes are permitted for leader /follower circuit breakers. The auto-reclose scheme provides single phase or three phase auto-reclosing of a feeder switched by two circuit breakers. The two circuit breakers are normally arranged to reclose sequentially with one, designated the 'Leader' circuit breaker, reclosing after a set dead time followed, if the leader CB remains closed, by the second circuit breaker, designated the 'Follower' circuit breaker after a further delay (follower time). **L1P F1P** : both leader and follower are configured for single phase auto-reclosing. **L1P F3P** : the leader is configured for single phase auto-reclosing, whilst the follower is configured for three phase auto-reclosing. **L3P F3P** : both leader and follower are configured for three phase auto-reclosing. **L1/3P F1/3P** : both leader and follower are configured for either single phase or three phase auto-reclosing. **L1/3P F3P** : the leader is configured for single phase or three phase auto-reclosing, while the follower is configured for three phase auto-reclosing only. **Opto** : the auto-reclosing mode of the leader and follower are controlled by opto input signals (Opto) mapped via DDBs (1497) **Lead AR 1P**, (1498) **Lead AR 3P**, (1409) **Follower AR 1P**, and (1410) **Follower AR 3P**.				
AR Mode	AR 3P	AR 1P, AR 1/3P, AR 3P,AR Opto		
If the **Num CBs** setting (cell 4950 {above} in the AUTORECLOSE column) is set to **CB1 Only**, or **CB2 Only**, then this setting determines which auto-reclose modes are permitted for the circuit breaker : single phase (AR 1P) only, both single phase and three phase (AR 1/3P), three phase only (AR 3P), or the auto-reclosing mode is controlled by opto input signals (Opto) mapped via DDBs (1497) **Lead AR 1P** and (1498) **Lead AR 3P**.				

ST

ST

Menu text	Default setting	Setting range		Step size
		Min.	Max.	
Leader Select By	Leader by Menu	Leader by Menu, Leader by Opto, Leader by Control		
Setting which determines how the preferred leader CB is selected - can be by menu setting, HMI command or by designated opto input. If **Leader Select By**: is set to **Leader by Opto**, then preferred leader CB is :- • CB1 if input DDB(1408) **CB2 Lead** is low, or • CB2 if input DDB (1408) **CB2 Lead** is high. If **Leader Select By**: is set to Leader by Control, then user control setting **CTRL CB2 Lead** under CB CONTROL in the IED menu determines the preferred leader by applying set/reset commands (If **Set** then CB2 is leader ,If **Reset** then CB1 is leader).				
Select Leader	Sel Leader CB1	Sel Leader CB1, Sel Leader CB2		
If **Leader Select By** is set to **Leader by Menu** in the previous cell, then setting **Select Leader** becomes visible, and determines which CB is the preferred leader.				
BF if LFail Cls	Enabled	Enabled or Disabled		
BF if L Fail Cls = Block Follower reclose if Leader CB Fails to close. This setting determines whether a follower CB should lock out without reclosing, or continue to reclose, if the leader CB fails to reclose when the leader CB close command is given. If **BF if L Fail Cls** is set to **Enable**, follower CB reclosing is locked out if the leader fails to close. If **BF if L Fail Cls** is set to **Disable**, the follower CB can continue its reclose cycle if the leader CB fails to close. (See also setting **Dynamic F/L**).				
Dynamic F/L	Disabled	Enabled or Disabled		
Dynamic F/L = Dynamic change from follower to leader status during an auto-reclose cycle if the leader CB fails to close. If setting **BF if Lfail Cls** is set to **Disabled**, then setting **Dynamic F/L** becomes visible and determines whether the follower CB should assume **leader** status and reclose immediately if the leader CB should fail to close, or whether it should continue as follower and reclose after the Follower Time delay. **Dynamic F/L** set to **Enabled** selects immediate follower reclose if the leader CB fails to close; **Dynamic F/L** set to **Disabled** selects the follower to reclose after the Follower Time if leader CB fails to close.				
AR Shots	1	1	4	1
This setting determines how many reclose attempts (shots) are permitted for any single fault incident before it is treated as **persistent** and auto-reclosing is locked out. For example if **AR Shots** = 2, a second reclose attempt is initiated if the protection retrips during the reclaim time following one reclose attempt, but locks out if the protection retrips during the reclaim time after a second reclose attempt.				
Multi Phase AR	Allow Autoclose	Allow Autoclose, BAR 2 and 3 ph, BAR 3 phase		
This setting determines whether auto-reclosing is permitted or blocked for two phase or three phase faults.				

Menu text	Default setting	Setting range		Step size
		Min.	Max.	
Discrim Time	100.0 ms	20 ms	5 second	10 ms
Discrim Time = Discriminating Time. This is a setting which determines whether a fault on another phase (**evolving** or **developing** fault) after single phase trip and auto-reclose has been initiated by a single phase fault stops the single phase cycle and starts a three phase auto-reclose cycle provided this second fault (evolving fault) occurs BEFORE the Discrimination Time elapsed. It forces a lockout if second fault (evolving fault) occurs AFTER Discrimination Time has elapsed but before Single Phase Dead Time elapses.				
CB IS Time	100.0 ms	5 s	200 second	100 ms
CB IS Time = CB In Service Time. This is a timer setting for which a CB must remain closed (and optionally the line be live) before it is considered to be **In Service**.				
CB IS MemoryTime	500.0 ms	10 ms	1 second	10 ms
CB IS Memory Time is a timer setting which allows a **CB In Service** state to be remembered for a short period following changeover of the CB auxiliary switch contacts to a **CB Open** state. This may occasionally be necessary for a few types of CB with exceptionally fast acting auxiliary switch contacts which allow the auto-reclose scheme logic to detect the CB opening before it detects an associated protection operation.				
DT Start by Prot	Protection Reset	Protection Reset , Protection Op, Disable		
DT Start by Prot = Dead Time Start By Protection action. If **DT Start by Prot** is set to **Disable**, a dead time start is not directly affected by protection operation or reset, but is enabled by other conditions or events (see settings: **3PDTStart WhenLD** and **DTStart by CB Op**). If **DT Start by Prot** is set to **Protection Op**, the dead time starting is enabled when the auto-reclose initiation signal is received from the protection. If **DT Start by Prot** is set to **Protection Reset**, the dead time starting is inhibited until the auto-reclose initiation signal from the protection resets.				
3PDTStart WhenLD	Disabled	Enabled or Disabled		
3PDTStart When LD = three phase auto-reclose dead time starts when the line has gone **dead**. If **Enabled**, the line is required to go **dead** before a 3 phase auto-reclose dead time can start. If **Disabled**, dead time can start when other selected conditions are satisfied, irrespective of line volts.				
DTStart by CB Op	Disabled	Enabled or Disabled		
If **Enabled**, a dead time start is permitted only when the CB has tripped. If **Disabled**, a dead time start is permitted when other selected conditions are satisfied, irrespective of the CB position.				
Dead Line Time	5.0 sec	1.0 sec	9999 s	1.0 sec
When **3PDTStart When LD** is **Enabled**, and the line does not go **dead** within the set **Dead Line Time** period, then the logic will force the auto-reclose sequence to lockout after expiry of this time.				
SP AR Dead Time	500.0 ms	0.0 sec	10 s	10 ms
Dead time setting for single phase auto-reclose.				
3P AR DT Shot 1	300.0 ms	10.0 ms	300 s	10 ms
Dead time setting for three phase auto-reclose (first shot).				
3P AR DT Shot 2	60.0 s	1.0 s	9999 s	1 s
Dead time setting for three phase auto-reclose (2nd shot).				
3P AR DT Shot 3	60.0 s	1.0 s	9999 s	1 s
Dead time setting for three phase auto-reclose (3rd shot).				

ST

ST

Menu text	Default setting	Setting range		Step size
		Min.	Max.	
3P AR DT Shot 4	60.0 s	1.0 s	9999 s	1 s
Dead time setting for three phase auto-reclose (4th shot).				
Follower Time	5.0 s	100.0 ms	300 s	10 ms
Time delay setting for follower CB reclosing after leader CB has reclosed.				
SPAR ReclaimTime	60.0 s	1.0 s	600 s	1 s
Reclaim time setting following single phase auto-reclosure.				
3PAR ReclaimTime	180.0 s	1.0 s	600 s	1 s
Reclaim time setting following three phase auto-reclosure.				
AR CBHealthy Time	5 s	0.01s	9999 s	0.01 s
Maximum waiting time to enable CB Closing by auto-reclose. Input DDBs (436/437) are used for **CB1 Healthy** & **CB2 Healthy** respectively to enable CB1 and CB2 Close by auto-reclose. If the set time runs out with the input DDB: **CBx Healthy** low (= 0), alarm **AR CBx Unhealthy** (DDB307 or 329 for CB1 & CB2 respectively) is set and the CBx auto-reclose sequence is cancelled.				
AR CheckSync Time	5 s	0.01 s	9999 s	0.01 s
Maximum waiting time for relevant signals **CB1L SCOK** or **CB1F SCOK** from system check logic, to enable CB1 Close by auto-reclose. Same waiting time setting applies to input signals **CB2L SCOK** or **CB2F SCOK** to enable CB2 Close by auto-reclose. If the set time runs out with the input signal **CBx SCOK** low (= 0), System Check Synchronization fail alarm **AR CBx NO C/S** (DDB 308 or 330 for CB1 & CB2 respectively) is set and the CBx auto-reclose sequence is cancelled.				
Z1 AR	Initiate AR	Block AR or Initiate AR		
Setting that determines impact of instantaneous zone 1 on AR operation. (Only in models with distance option)				
Diff AR	Initiate AR	Block AR or Initiate AR		
Setting that determines impact of the phase differential tripping on AR operation.				
Dist Aided AR	Initiate AR	Block AR or Initiate AR		
Setting that determines impact of the aided distance schemes tripping on AR operation. (Only in models with distance option)				
Z2T AR	Block AR	No action, Block AR or Initiate AR		
Setting that determines impact of time delayed zone 2 on AR operation. Set **Initiate AR** if the trip should initiate a cycle, and **Block AR** if a time delayed trip should cause lockout. Set **No action** if Zone 2 tripping should exert no specific logic control on the recloser. (Only in models with distance option)				
Z3T AR	Block AR	No action, Block AR or Initiate AR		
Similar application to Z3T AR. Selection for Zone 3 trips. (Only in models with distance option)				

Menu text	Default setting	Setting range		Step size
		Min.	Max.	
ZPT AR	Block AR	No action, Block AR or Initiate AR		
Similar application to ZPT AR. Selection for Zone 3 trips. (Only in models with distance option)				
Z4T AR	Block AR	No action, Block AR or Initiate AR		
Similar application to Z4T AR. Selection for Zone 4 trips. (Only in models with distance option)				
DEF Aided AR	Block AR	Block AR or Initiate AR		
Setting that determines impact of aided Directional Earth Fault protection (DEF) on AR operation. (Only in models with distance option)				
Dir Aided AR	Block AR	Block AR or Initiate AR		
Setting that determines impact of aided Directional Comparison protection (DEF) on AR operation. (Only in models with distance option)				
TOR AR	Block AR	Block AR or Initiate AR		
Setting that determines impact of Trip On Reclose (TOR) on AR operation. (Only in models with distance option)				
I>1 AR	No Action	No action, Block AR or Initiate AR		
Setting that determines impact of the first stage overcurrent protection on AR operation.				
I>2 AR to I>4 AR Cells as for I>1 AR Above				
IN>1 AR	No Action	No action, Block AR or Initiate AR		
Setting that determines impact of the first stage earth fault overcurrent protection on AR operation.				
IN>2 AR to IN>4 AR Cells as for IN>1 AR Above				
ISEF>1 AR	No Action	No action, Block AR or Initiate AR		
Setting that determines impact of the first stage sensitive earth fault overcurrent protection on AR operation.				
ISEF>2 AR to ISEF>4 AR Cells as for ISEF>1AR Above				
AR SYS CHECKS				
CB1L SC all	Disabled	Enabled or Disabled		
This setting determines whether a system check (e.g. **live bus** / **dead line** etc) is required for any auto-reclose of CB1 as leader. If **Enabled**, system check is required for some or all reclosures. If **Disabled**, system check is not required for any reclosures.				

ST

ST

Menu text	Default setting	Setting range		Step size
		Min.	Max.	
CB1L SC Shot 1	Disabled	Enabled or Disabled		
This setting determines whether a system check (e.g. **live bus** / **dead line** etc) is required for the first shot reclosure of CB1 as leader. If **Enabled**, system check is required for the first shot reclosure. If **Disabled**, system check is not required for the first shot reclosure.				
CB1L SC ClsNoDly	Disabled	Enabled or Disabled		
If **CB1L SC ClsNoDly** is **Enabled**, CB1 can reclose as leader as soon as the synchro check conditions are satisfied, without waiting for the dead time to elapse. This option is sometimes required for the second line end to reclose onto a line with delayed auto-reclosing (typical cycle: first line end recloses after the dead time with **live bus** & **dead line**, then the second line end recloses immediately with **live bus** & **live line** in synchronism).				
CB1L SC CS1	Disabled	Enabled or Disabled		
This setting enables CB1 to auto-reclose as leader when the system satisfies all the System Check Synchronism Stage 1 criteria as defined under **CB1 CS1 Status** settings in the SYSTEM CHECKS column.				
CB1L SC CS2	Disabled	Enabled or Disabled		
This setting enables CB1 to auto-reclose as leader when the system satisfies all the System Check Synchronism Stage 2 criteria as defined under the setting **CB1 CS2 status** in the SYSTEM CHECKS column.				
CB1L SC DLLB	Disabled	Enabled or Disabled		
This setting enables CB1 to auto-reclose as leader when the **dead line** & **live bus1** conditions are satisfied as set in the SYSTEM CHECKS column.				
CB1L SC LLDB	Disabled	Enabled or Disabled		
This setting enables CB1 to auto-reclose as leader when the **live line** & **dead bus1** conditions are satisfied as set in the SYSTEM CHECKS column.				
CB1L SC DLDB	Disabled	Enabled or Disabled		
This setting enables CB1 to auto-reclose as leader when the **dead line** & **dead bus1** conditions are satisfied as set in the SYSTEM CHECKS column.				
CB2L SC all	Disabled	Enabled or Disabled		
This setting determines whether a system check (e.g. **live bus** / **dead line** or **sync check**) is required for any auto-reclose of CB2 as leader. If **Enabled**, system check is required for some or all reclosures. If **Disabled**, system check is not required for any reclosures.				
CB2L SC Shot 1	Disabled	Enabled or Disabled		
This setting determines whether a system check (e.g. **live bus** / **dead line** etc) is required for the first shot reclosure of CB2 as leader. If **Enabled**, system check is required for the first shot reclosure. If **Disabled**, system check is not required for the first shot reclosure.				
CB2L SC ClsNoDly	Disabled	Enabled or Disabled		
If **CB2L SC ClsNoDly** is **Enabled**, CB2 can reclose as leader as soon as the synchro check conditions are satisfied, without waiting for the dead time to elapse. This option is sometimes required for the second line end to reclose on a line with delayed auto-reclosing (typical cycle: the first line end recloses after the dead time with **live bus** & **dead line**, then the second line end recloses immediately with **live bus** & **live line** in synchronism).				

Menu text	Default setting	Setting range		Step size
		Min.	Max.	
CB2L SC CS1	Disabled	Enabled or Disabled		
This setting enables CB2 to auto-reclose as leader when the system satisfies all the System Check Synchronism Stage 1 criteria as defined under **CB2 CS1 Status** settings in the SYSTEM CHECKS column.				
CB2L SC CS2	Disabled	Enabled or Disabled		
This setting enables CB2 to auto-reclose as leader when the system satisfies all the System Check Synchronism Stage 2 criteria as defined under **CB2 CS2 Status** settings in the SYSTEM CHECKS column.				
CB2L SC DLLB	Disabled	Enabled or Disabled		
This setting enables CB2 to auto-reclose as leader when the **dead line** & **live bus 2** conditions are satisfied as set in the SYSTEM CHECKS column.				
CB2L SC LLDB	Disabled	Enabled or Disabled		
This setting enables CB2 to auto-reclose as leader when the **live line** & **dead bus 2** conditions are satisfied as set in the SYSTEM CHECKS column.				
CB2L SC DLDB	Disabled	Enabled or Disabled		
This setting enables CB2 to auto-reclose as leader when the **dead line** & **dead bus 2** conditions are satisfied as set in the SYSTEM CHECKS column.				
CB1F SC all	Disabled	Enabled or Disabled		
This setting determines whether a system check (e.g. **live bus** / **dead line** etc) is required for any auto-reclose of CB1 as follower. If **Enabled**, system check is required for some or all reclosures. If **Disabled**, system check is not required for any reclosures.				
CB1F SC Shot 1	Disabled	Enabled or Disabled		
This setting determines whether a system check (e.g. **live bus** / **dead line** etc) is required for the first shot reclosure of CB1 as follower. If **Enabled**, system check is required for the first shot reclosure. If **Disabled**, system check is not required for the first shot reclosure.				
CB1F SC CS1	Disabled	Enabled or Disabled		
This setting enables CB1 to auto-reclose as follower when the system satisfies all the System Check Synchronism Stage 1 conditions as listed under setting **CB1 CS1 Status** in the SYSTEM CHECKS column.				
CB1F SC CS2	Disabled	Enabled or Disabled		
This setting enables CB1 to auto-reclose as follower when system satisfies all the System Check Synchronism Stage 2 conditions as listed under setting **CB1 CS2 Status** in the SYSTEM CHECKS settings.				
CB1F SC DLLB	Disabled	Enabled or Disabled		
This setting enables CB1 to auto-reclose as follower when the **dead line** & **live bus1** conditions are satisfied in the SYSTEM CHECKS column.				
CB1F SC LLDB	Disabled	Enabled or Disabled		
This setting enables CB1 to auto-reclose as follower when the **live line** & **dead bus1** conditions are satisfied in the SYSTEM CHECKS column.				
CB1F SC DLDB	Disabled	Enabled or Disabled		
This setting enables CB1 to auto-reclose as follower when the "**dead line**" & "**dead bus1**" conditions are satisfied in the SYSTEM CHECKS settings.				
CB2F SC all	Disabled	Enabled or Disabled		
This setting determines whether a system check (e.g. **live bus** / **dead line** etc) is required for any auto-reclose of CB2 as follower. If **Enabled**, system check is required for some or all reclosures. If **Disabled**, system check is not required for any reclosures.				

Menu text	Default setting	Setting range		Step size
		Min.	Max.	
CB2F SC Shot 1	Disabled	Enabled or Disabled		
This setting determines whether a system check (e.g. **live bus** / **dead line** etc) is required for the first shot reclosure of CB2 as follower. If **Enabled**, system check is required for the first shot reclosure. If **Disabled**, system check is not required for the first shot reclosure.				
CB2F SC CS1	Disabled	Enabled or Disabled		
This setting enables CB2 to auto-reclose as follower when the system satisfies all the System Check Synchronism Stage 1 conditions as listed under setting **CB2 CS1 Status** in the SYSTEM CHECKS column.				
CB2F SC CS2	Disabled	Enabled or Disabled		
This setting enables CB2 to auto-reclose as follower when system satisfies all the System Check Synchronism Stage 2 conditions as listed under setting **CB2 CS2 Status** in the SYSTEM CHECKS settings.				
CB2F SC DLLB	Disabled	Enabled or Disabled		
This setting enables CB2 to auto-reclose as follower when the **dead line** & **live bus 2** conditions are satisfied in the SYSTEM CHECKS column.				
CB2F SC LLDB	Disabled	Enabled or Disabled		
This setting enables CB2 to auto-reclose as follower when the **live line** & **dead bus 2** conditions are satisfied in the SYSTEM CHECKS column.				
CB2F SC DLDB	Disabled	Enabled or Disabled		
This setting enables CB2 to auto-reclose as follower when the **dead line** & **dead bus 2** conditions are satisfied in the SYSTEM CHECKS settings.				

ST

1.3.22 Input labels

The column **GROUP x INPUT LABELS** is used to individually label each opto input that is available in the relay. The text is restricted to 16 characters and is available if 'Input Labels' are set visible under CONFIGURATION column.

Menu text	Default setting	Setting range		Step size
		Min.	Max.	
Opto Input 1	Input L1	16 characters custom name		
Label for Opto Input 1				
Opto Input x	Input Lx	16 characters custom name		
Label for other Opto Inputs. x = up to 32, depending on relay model.				

1.3.23 Output labels

The column **GROUP x OUTPUT LABELS** is used to individually label each output relay that is available in the relay. The text is restricted to 16 characters and is available if 'Output Labels' are set visible under CONFIGURATION column.

Menu text	Default setting	Setting range		Step size
		Min.	Max.	
Relay 1	Output R1	16 characters custom name		
Label for output relay 1				
Relay x	Output Rx	16 characters custom name		
Label for other output relays. x = up to 32, depending on relay model.				

1.4 Control and support settings

The control and support settings are part of the main menu and are used to configure the relays global configuration. It includes submenu settings as below:

- Relay function configuration settings
- Open/close circuit breaker
- CT & VT ratio settings
- Reset LEDs
- Active protection setting group
- Password & language settings
- Circuit breaker control & monitoring settings
- Communications settings
- Measurement settings
- Event & fault record settings
- User interface settings
- Commissioning settings

1.4.1 System data

This menu provides information for the device and general status of the relay.

Menu text	Default setting	Setting range		Step size
		Min.	Max.	
Language	English			
The default language used by the device. Selectable as English, French, German, Spanish.				
Password	****			
Device default password.				
Sys. Fn. Links	0			1
Setting to allow the fixed function trip LED to be self resetting (set to 1 to extinguish the LED after a period of healthy restoration of load current).				
Description	MiCOM P54x			
16 character relay description. Can be edited.				
Plant Reference	MiCOM			
Associated plant description and can be edited.				
Model Number	P54??1???M???0K			
Relay model number. This display cannot be altered.				
Serial Number	123456J			
Relay model number. This display cannot be altered.				
Frequency	50 Hz	50 Hz or 60 Hz		
Relay set frequency. Settable either 50 or 60 Hz				
Comms. Level 2				
Displays the conformance of the relay to the Courier Level 2 comms.				

ST

Menu text	Default setting	Setting range		Step size
		Min.	Max.	
Relay Address 1	255	0	255	1
Sets the first rear port relay address.				
Plant Status	0000000000000010			
Displays the circuit breaker plant status.				
Control Status	0000000000000000			
Not used.				
Active Group	1	1	4	1
Displays the active settings group.				
CB Trip/Close	No Operation	No Operation/ Trip/Close		
Supports trip and close commands if enabled in the Circuit Breaker Control menu.				
Software Ref. 1	P54x____1__055_K			
Software Ref. 2	P54x____1__055_K			
Displays the relay software version including protocol and relay model. Software Ref. 2 is displayed for relay with IEC 61850 protocol only and this will display the software version of the Ethernet card.				
Opto I/P Status	00000000000000000000000000000000			
Display the status of the available opto inputs fitted.				
Relay O/P Status	00000000000000000000000000000000			
Displays the status of all available output relays fitted.				
Alarm Status 1	00000000000000000000000000000000			
32 bit field gives status of first 32 alarms. Includes fixed and user settable alarms.				
Alarm Status 2	00000000000000000000000000000000			
Next 32 alarm status defined.				
Access Level	2			
Displays the current access level. Level 0 - No password required - Read access to all settings, alarms, event records and fault records Level 1 - Password 1 or 2 required - As level 0 plus: Control commands, e.g. circuit breaker open/close Reset of fault and alarm conditions, Reset LEDs Clearing of event and fault records Level 2 - Password 2 required - As level 1 plus: All other settings				
Password Control	2			1
Sets the menu access level for the relay. This setting can only be changed when level 2 access is enabled.				
Password Level 1	****			
Allows user to change password level 1.				
Password Level 2	****			
Allows user to change password level 2.				

1.4.2 Circuit breaker control

The System Checks functionality differs between the P543/P545 and the P544/P546 since the P543/P545 can only control one circuit breaker, whereas the P544/P546 can control two. Accordingly, therefore, the settings are different for the two.

1.4.2.1 Circuit breaker control (P543/P545)

The relay includes the following options for control of a single circuit breaker:

- Local tripping and closing, via the relay menu or hotkeys
- Local tripping and closing, via relay opto-isolated inputs
- Remote tripping and closing, using the relay communications

Menu text	Default setting	Setting range		Step size
		Min.	Max.	
CB control by	Disabled	Disabled, Local, Remote, Local + Remote, Opto, Opto + local, Opto + Remote, Opto + Remote + local		
This Setting selects the type of circuit breaker control that be used in the logic				
Close Pulse Time	0.5 s	0.1 s	10 s	0.01 s
Defines the duration of the close pulse.				
Trip Pulse Time	0.5 s	0.1 s	5 s	0.01 s
Defines the duration of the trip pulse.				
Man Close Delay	10 s	0.01 s	600 s	0.01 s
This defines the delay time before the close pulse is executed.				
CB Healthy Time	5 s	0.01 s	9999 s	0.01 s
A settable time delay included for manual closure with this circuit breaker check. If the circuit breaker does not indicate a healthy condition in this time period following a close command then the relay will lockout and alarm.				
Check Sync. Time	5 s	0.01 s	9999 s	0.01 s
A user settable time delay is included for manual closure with check synchronizing. If the check sync. criteria are not satisfied in this time period following a close command the relay will lockout and alarm.				
Lockout Reset	No	No, Yes		
Displays if the Lockout condition has been reset.				
Reset Lockout By	CB Close	User Interface, CB Close		
Setting that determines if a lockout condition will be reset by a manual circuit breaker close command or via the user interface.				
Man Close RstDly	5 s	0.1 s	600 s	0.01 s
The manual close time, time delay, that is used to reset a lockout automatically from a manual close.				
Single Pole A/R	Disabled	Disabled or Enabled		
Enable or disable AR for single phase fault types. **Care:** This setting also applies when auto-reclose is configured in 3 pole tripping applications. Even though the trip mode may be 3 pole only, the fact that the *initiation* was a single phase fault type is memorized.				
Three Pole A/R	Disabled	Disabled or Enabled		
Enable or disable AR for multi-phase faults.				

ST

Menu text	Default setting	Setting range		Step size
		Min.	Max.	
Total Re-closures	Data			
Displays the number of successful re-closures.				
Reset Total A/R	No	No, Yes		
Allows user to reset the auto-reclose counters.				
CB Status Input	52B 1 pole	None, 52A 1 pole, 52B 1 pole, 52A & 52B 1 pole, 52A 3 pole, 52B 3 pole, 52A & 52B 3 pole		
Setting to define the type of circuit breaker contacts that will be used for the circuit breaker control logic. Form **A** contacts match the status of the circuit breaker primary contacts, form **B** are opposite to the breaker status. When **1 pole** is selected, individual contacts must be assigned in the Programmable Scheme Logic for phase A, phase B, and phase C. Setting **3 pole** means that only a single contact is used, common to all 3 poles.				

ST

1.4.2.2 Circuit breaker control (P544/P546)

The relay includes the following options for control of two circuit breakers:

- Local tripping and closing, via the relay menu or hotkeys
- Local tripping and closing, via relay opto-isolated inputs
- Remote tripping and closing, using the relay communications

Menu text	Default setting	Setting range		Step size
		Min.	Max.	
CB control by	Disabled	Disabled, Local, Remote, Local + Remote, Opto, Opto + local, Opto + Remote, Opto + Remote + local		
This Setting selects the type of circuit breaker control that be used in the logic. This setting is common to both CB1 and CB2. It determines which manual trip and close controls can be used to control both circuit breakers.				
Close Pulse Time	0.5 s	0.1 s	10 s	0.01 s
Defines the duration of the close pulse within which CB should close when close command is issued. If CB fails to close after elapse of this time, CB close fail alarm (DDB 303 or 325 for CB1 & CB2 respectively) is set.				
Trip Pulse Time	0.5 s	0.1 s	5 s	0.01 s
Defines the duration of the trip pulse within which CB should trip when manual or protection trip command is issued. If CB does not trip within set Trip Pulse Time, CB failed to trip alarm is set.				
Man Close Delay	10 s	0.01 s	600 s	0.01 s
This defines the delay time before the close pulse is executed.				

Menu text	Default setting	Setting range		Step size
		Min.	Max.	
CB Healthy Time	5 s	0.01 s	9999 s	0.01 s
A settable time delay included for manual closure of the circuit breaker. If the circuit breaker does not indicate a healthy condition in this time period following a close command then the relay will lockout and alarm. Input DDB (436 & 437) are used for CB1 Healthy & CB2 Healthy respectively to enable CB1 and CB2 closing. If the set time runs out with input DDB (304 or 326 for CB1 & CB2 respectively): CBx Healthy low (= 0), alarm ManCBx Unhealthy is set and operator controlled CBx close sequence is cancelled.				
Check Sync. Time	5 s	0.01 s	9999 s	0.01 s
A user settable time delay is included for manual closure with System Check Synchronizing. If the System Check Synchronizing riteria are not satisfied in this time period following a close command the relay will lockout and alarm. Input signals CB1Man SCOK, DDB (1574) and CB2Man SCOK, DDB (1458) from system check logic is used to enable CB Closing by manual control. If set time runs out with input signal CBxMan SCOK low (= 0), alarm Control NoCS CBxManClose (DDB 305 or 327 for CB1 & CB2 respectively) is set and CB close sequence is cancelled.				
Rst CB mon LO By	CB Close	User Interface, CB Close		
This setting is used to decide preferred option to reset of a lockout condition caused by CB monitoring conditions either by a manual circuit breaker close command or via the user interface.				
CB mon LO RstDly	5s	0.1s	600s	0.01s
If **Rst CB mon LO By** is set to CB Close then **CB mon LO RstDly** timer allows reset of CB lockout state after set time delay.				
CB1 Status Input	52B 1 pole	None, 52A 1 pole, 52B 1 pole, 52A & 52B 1 pole, 52A 3 pole, 52B 3 pole, 52A & 52B 3 pole		
Setting to define the type of circuit breaker contacts that will be used for the circuit breaker control logic. Form **A** contacts match the status of the circuit breaker primary contacts, form **B** are opposite to the breaker status. When **1 pole** is selected, individual contacts must be assigned in the Programmable Scheme Logic for phase A, phase B, and phase C. Setting **3 pole** means that only a single contact is used, common to all 3 poles.				
CB Status Time	5s	0.1s	5s	0.01s
Under healthy conditions the circuit breaker auxiliary contacts will be in opposite states. Should both sets of contacts be open or closed, it indicates that either the contacts, or the wiring, or the circuit breaker are defective and an alarm will be issued after **CB Status Time** delay. The time delay is set to avoid unwanted operation during normal switching duties.				
CB2 Status Input	52B 1 pole	None, 52A 1 pole, 52B 1 pole, 52A & 52B 1 pole, 52A 3 pole, 52B 3 pole, 52A & 52B 3 pole		
Setting to define the type of circuit breaker contacts that will be used for the circuit breaker control logic. Form **A** contacts match the status of the circuit breaker primary contacts, form **B** are opposite to the breaker status. When **1 pole** is selected, individual contacts must be assigned in the Programmable Scheme Logic for phase A, phase B, and phase C. Setting **3 pole** means that only a single contact is used, common to all 3 poles.				

ST

Menu text	Default setting	Setting range		Step size
		Min.	Max.	
Res AROK by UI	Enabled	Enabled or Disabled		
If **Enabled**, this allows the **successful auto-reclose** signal to be reset by user interface command “Reset AROK Ind”.				
Res AROK by NoAR	Disabled	Enabled or Disabled		
If **Enabled**, this allows the **successful auto-reclose** signal to be reset by temporarily disabling auto-reclosing. Refer to the operations chapter (*P841/EN OP*) for details of auto-reclose enabling/disabling.				
Res AROK by Ext	Disabled	Enabled or Disabled		
If **Enabled**, this allows the **successful auto-reclose** signal (CB1 or CB2) to be reset by activation of the relevant input **Ext Rst CB1 AROK** or **Ext Rst CB2 AROK** DDB (1517/1417) mapping in the PSL.				
Res AROK by TDly	Disabled	Enabled or Disabled		
If **Enabled**, this allows the **successful auto-reclose** signal to be reset after a time delay as set in the **Res AROK by TDly** setting.				
Res AROK by TDly	1.0 s	1.0 s	9999 s	1.0 s
Time delay for the **successful auto-reclose** signal to reset, if setting **Res AROK by TDly** is **Enabled**.				
Res LO by CB IS	Enabled	Enabled or Disabled		
If **Enabled**, this allows reset of the CB lockout state when the CB is **In Service** (i.e. CB is closed for time > **CB IS Time**).				
Res LO by UI	Enabled	Enabled or Disabled		
If **Enabled**, this allows reset of each CB lockout state by User Interface commands **Reset CB1 LO** or **Reset CB2 LO**.				
Res LO by NoAR	Disabled	Enabled or Disabled		
If **Enabled**, this allows reset of the CB lockout state by by temporarily disabling auto-reclosing. Refer to the operations chapter (*P841/EN OP*) for details of auto-reclose enabling/disabling.				
Res LO by ExtDDB	Disabled	Enabled or Disabled		
If **Enabled**, this allows the CB lockout state (CB1 /CB2) to be reset by activation of the relevant input **Rst CB1 Lockout** or **Rst CB2 Lockout** DDBs (446/1422) mapping in the PSL.				
Res LO by TDelay	Disabled	Enabled or Disabled		
If **Enabled**, this allows the CB lockout state to be reset after a time delay as set in the **LO Reset Time**.				
LO Reset Time	1.0 s	1.0 s	9999 s	1.0 s
Time delay for CB lockout state to be reset, if **Res LO by TDelay** is **Enabled**.				

1.4.3 Date and time

Displays the date and time as well as the battery condition.

Menu text	Default setting	Setting range		Step size
		Min.	Max.	
Date/Time	Data			
Displays the relay's current date and time.				
IRIG-B Sync.	Disabled	Disabled or Enabled		
Enable IRIG-B time synchronization.				
IRIG-B Status	Data	Card not fitted/Card failed/ Signal healthy/No signal		
Displays the status of IRIG-B.				
Battery Status	Data			
Displays whether the battery is healthy or not.				
Battery Alarm	Enabled	Enabled or Disabled		
Setting that determines whether an unhealthy relay battery condition is alarmed or not.				
SNTP Status	Data			
Ethernet versions only. Displays information about the SNTP time synchronization status: Disabled, Trying Server 1, Trying Server 2, Server 1 OK, Server 2 OK, No response, or No valid clock.				
LocalTime Enable	Disabled	Disabled/Fixed/Flexible		
Setting to turn on/off local time adjustments. Disabled - No local time zone will be maintained. Time synchronization from any interface will be used to directly set the master clock and all displayed (or read) times on all interfaces will be based on the master clock with no adjustment. Fixed - A local time zone adjustment can be defined using the LocalTime offset setting and all interfaces will use local time except SNTP time synchronization and IEC 61850 timestamps. Flexible - A local time zone adjustment can be defined using the LocalTime offset setting and each interface can be assigned to the UTC zone or local time zone with the exception of the local interfaces which will always be in the local time zone and IEC 61850/SNTP which will always be in the UTC zone.				
LocalTime Offset	0	-720	720	15
Setting to specify an offset of -12 to +12 hrs in 15 minute intervals for local time zone. This adjustment is applied to the time based on the master clock which is UTC/GMT				
DST Enable	Disabled	Disabled or Enabled		
Setting to turn on/off daylight saving time adjustment to local time.				
DST Offset	60 mins	30	60	30 min
Setting to specify daylight saving offset which will be used for the time adjustment to local time.				
DST Start	Last	First, Second, Third, Fourth, Last		
Setting to specify the week of the month in which daylight saving time adjustment starts				
DST Start Day	Sunday	Monday, Tuesday, Wednesday, Thursday, Friday, Saturday		
Setting to specify the day of the week in which daylight saving time adjustment starts				

ST

ST

Menu text	Default setting	Setting range		Step size
		Min.	Max.	
DST Start Month	March	January, February, March, April, May, June, July, August, September, October, November, December		
Setting to specify the month in which daylight saving time adjustment starts				
DST Start Mins	60 min	0	1425	15 min
Setting to specify the time of day in which daylight saving time adjustment starts. This is set relative to 00:00 hrs on the selected day when time adjustment is to start.				
DST End	Last	First, Second, Third, Fourth, Last		
Setting to specify the week of the month in which daylight saving time adjustment ends.				
DST End Day	Sunday	Monday, Tuesday, Wednesday, Thursday, Friday, Saturday		
Setting to specify the day of the week in which daylight saving time adjustment ends				
DST End Month	October	January, February, March, April, May, June, July, August, September, October, November, December		
Setting to specify the month in which daylight saving time adjustment ends				
DST End Mins	60	0	1425	15 min
Setting to specify the time of day in which daylight saving time adjustment ends. This is set relative to 00:00 hrs on the selected day when time adjustment is to end.				
RP1 Time Zone	Local	UTC or Local		
Setting for the rear port 1 interface to specify if time synchronization received will be local or universal time co-ordinated				
RP2 Time Zone	Local	UTC or Local		
Setting for the rear port 2 interface to specify if time synchronization received will be local or universal time co-ordinated				
DNPOE Time Zone	Local	UTC or Local		
Setting to specify if time synchronisation received will be local or universal time co-ordinate when DNP3.0 protocol is implemented over Ethernet.				
Tunnel Time Zone	Local	UTC or Local		
Setting to specify if time synchronization received will be local or universal time co-ordinate when 'tunneling' courier protocol over ethernet.				

1.4.4 CT/VT ratios

The CT/VT ratio settings differ between the P543/P545 and the P544/P546 because of the different number of circuit breakers controlled.

1.4.4.1 CT/VT ratios (P543/P545)

Menu text	Default setting	Setting range		Step size
		Min.	Max.	
Main VT Primary	110.0 V	100 V	1000 kV	1
Sets the main voltage transformer input primary voltage.				
Main VT Sec'y	110.0 V	80 V	140V	1
Sets the main voltage transformer input secondary voltage.				

Menu text	Default setting	Setting range		Step size
		Min.	Max.	
C/S VT Primary	110.0 V	100 V	1000 kV	1
Sets the check sync. voltage transformer input primary voltage.				
C/S VT Secondary	110.0 V	80 V	140 V	1
Sets the check sync. voltage transformer input secondary voltage.				
Phase CT Primary	1.000 A	1 A	30 kA	1
Sets the phase current transformer input primary current rating.				
Phase CT Sec'y	1 A	1 A	5 A	4
Sets the phase current transformer input secondary current rating.				
SEF CT Primary	1.000 A	1 A	30 kA	1
Sets the sensitive earth fault current transformer input primary current rating.				
SEF CT Secondary	1 A	1 A	5 A	4
Sets the sensitive earth fault current transformer input secondary current rating.				
MComp CT Primary	1.000 A	1	30 k	1
Sets the primary current rating of the neutral transformer that is located on the parallel line.				
MComp CT Secondary	1 A	1 A	5 A	4
Sets the secondary current rating of the neutral transformer that is located on the parallel line.				
C/S Input	A-N	A-N, B-N, C-N, A-B, B-C, C-A, A-N/1.732, B-N/1.732, C-N/1.732		N/A
Selects the check sync. Input voltage measurement.				
Main VT Location	Line	Line, Bus		N/A
Selects the main voltage transformer location.				
CT Polarity	Standard	Standard or Inverted		
To invert polarity (180 °) of the CT				
SEF CT Polarity	Standard	Standard or Inverted		
To invert polarity (180 °) of the SEF CT				
M CT Polarity	Standard	Standard or Inverted		
To invert polarity (180 °) of the M CT				
VTs Connected	Yes	Yes or No		
To indicate if voltage transformers are connected to the relay. This MUST be set properly to ensure Pole Dead logic works correctly. If set to 'No', it will set VTS Slow Block and VTS Fast Block DDBs, but will not raise any alarms. It will also override the VTS enabled setting should the user set it. If set to 'Yes' this setting will have no effect.				

ST

ST

1.4.4.2 CT/VT ratios (P544/P546)

Menu text	Default setting	Setting range		Step size
		Min.	Max.	
Main VT Primary	110.0 V	100 V	1000 kV	1
Sets the main voltage transformer input primary voltage.				
Main VT Sec'y	110.0 V	80 V	140 V	1
Sets the main voltage transformer input secondary voltage.				
CB1 CS VT Prim'y	110.0 V	100 V	1000 kV	1
Sets the System Check Synchronism voltage transformer input primary voltage.				
CB1 CS VT Sec'y	110.0 V	80 V	140 V	1
Sets the System Check Synchronism voltage transformer input secondary voltage.				
CB2 CS VT Prim'y	110.0 V	100 V	1000 kV	1
Sets the System Check Synchronism voltage transformer input primary voltage.				
CB2 CS VT Sec'y	110.0 V	80 V	140 V	1
Sets the System Check Synchronism voltage transformer input secondary voltage.				
Phase CT Primary	1.000 A	1 A	30 kA	1
Sets the phase current transformer input primary current rating.				
Phase CT Sec'y	1 A	1 A	5 A	4
Sets the phase current transformer input secondary current rating.				
SEF CT Primary	1.000 A	1 A	30 kA	1
Sets the sensitive earth fault current transformer input primary current rating.				
SEF CT Secondary	1 A	1 A	5 A	4
Sets the sensitive earth fault current transformer input secondary current rating.				
MComp CT Primary	1.000 A	1	30 k	1
Sets the primary current rating of the neutral transformer that is located on the parallel line.				
MComp CT Sec'y	1 A	1 A	5 A	4
Sets the secondary current rating of the neutral transformer that is located on the parallel line.				
CS Input	A-N	A-N, B-N, C-N, A-B, B-C, C-A		N/A
Selects the System Check Synchronism Input voltage measurement.				
CT1 Polarity	Standard	Standard or Inverted		
To invert polarity (180 °) of the CT.				
CT2 Polarity	Standard	Standard or Inverted		
To invert polarity (180 °) of the CT2.				
SEF CT Polarity	Standard	Standard or Inverted		
To invert polarity (180 °) of the SEF CT.				
M CT Polarity	Standard	Standard or Inverted		
To invert polarity (180 °) of the M CT.				

Menu text	Default setting	Setting range		Step size
		Min.	Max.	
VTs Connected	Yes	Yes or No		
To indicate if voltage transformers are connected to the relay. This MUST be set properly to ensure Pole Dead logic works correctly. If set to 'No', it will set VTS Slow Block and VTS Fast Block DDBs, but will not raise any alarms. It will also override the VTS enabled setting should the user set it. If set to 'Yes' this setting will have no effect.				
CB1 CS VT PhShft	0 deg	-180 deg	180 deg	5 deg
Phase angle difference between selected phase (**C/S Input** 0A 0F) of Line VT input and applied **CS1** VT input voltage under healthy system conditions.				
CB1 CS VT Mag.	1.0	0.2	3	0.01
Ratio of voltage magnitudes of selected phase (**C/S Input** 0A 0F) of Line VT input and applied **CS1** VT input voltage under healthy system conditions.				
CB2 CS VT PhShft	0 deg	-180 deg	180 deg	5 deg
Phase angle difference between selected phase (**C/S Input** 0A 0F) of Line VT input and applied **CS2** VT input voltage under healthy system conditions.				
CB2 CS VT Mag.	1.0	0.2	3	0.01
Ratio of voltage magnitudes of selected phase (**C/S Input** 0A 0F) of Line VT input and applied **CS2** VT input voltage under healthy system conditions.				

ST

1.4.5 Record control

It is possible to disable the reporting of events from all interfaces that supports setting changes. The settings that control the various types of events are in the Record Control column. The effect of setting each to disabled is as follows:

Menu text	Default setting	Available settings
Alarm Event	Enabled	Enabled or Disabled
Disabling this setting means that all the occurrences that produce an alarm will result in no event being generated.		
Relay O/P Event	Enabled	Enabled or Disabled
Disabling this setting means that no event will be generated for any change in logic state.		
Opto Input Event	Enabled	Enabled or Disabled
Disabling this setting means that no event will be generated for any change in logic input state.		
General Event	Enabled	Enabled or Disabled
Disabling this setting means that no General Events will be generated		
Fault Rec. Event	Enabled	Enabled or Disabled
Disabling this setting means that no event will be generated for any fault that produces a fault record		
Maint. Rec. Event	Enabled	Enabled or Disabled
Disabling this setting means that no event will be generated for any occurrence that produces a maintenance record.		
Protection Event	Enabled	Enabled or Disabled
Disabling this setting means that any operation of protection elements will not be logged as an event.		

Menu text	Default setting	Available settings
Flt Rec Extended	Enabled	Enabled or Disabled
When this setting is disabled, the fault record contains a snap shot of the local, remote, differential and bias currents taken 1 cycle after the trip. With this setting enabled an additional snap shot of local, remote, differential and bias currents taken at the time the differential trips is included in the fault record.		
DDB 31 - 0	11111111111111111111111111111111	
Chooses whether any individual DDBs should be deselected as a stored event, by setting the relevant bit to **0** (zero). Typically used for repetitive recurrent changes such as an Opto input assigned for Minute Pulse clock synchronizing.		
Up to… DDB 1791 - 1760	11111111111111111111111111111111	
As above, for all DDBs through to 1791.		

1.4.6 Measurements

ST

Menu text	Default settings	Available settings
MEASUREMENT SETUP		
Default Display	Description	Description/Plant Reference/ Frequency/Access Level/3Ph + N Current/3Ph Voltage/Power/Date and Time
This setting can be used to select the default display from a range of options, note that it is also possible to view the other default displays whilst at the default level using the ← and → keys. However once the 15 minute timeout elapses the default display will revert to that selected by this setting.		
Local Values	Primary	Primary/Secondary
This setting controls whether measured values via the front panel user interface and the front courier port are displayed as primary or secondary quantities.		
Remote Values	Primary	Primary/Secondary
This setting controls whether measured values via the rear communication port are displayed as primary or secondary quantities.		
Measurement Ref.	VA	VA/VB/VC/IA/IB/IC
Using this setting the phase reference for all angular measurements by the relay can be selected. This reference is for Measurements 1. Measurements 3 uses always IA local as a reference		
Measurement Mode	0	0 to 3 step 1
This setting is used to control the signing of the real and reactive power quantities; the signing convention used is defined in the Measurements and Recording chapter (*P54x/EN MR*).		
Fix Dem. Period	30 minutes	1 to 99 minutes step 1 minute
This setting defines the length of the fixed demand window.		
Roll Sub Period	30 minutes	1 to 99 minutes step 1 minute
These two settings are used to set the length of the window used for the calculation of rolling demand quantities.		
Num. Sub Periods	1	1 to 15 step 1
This setting is used to set the resolution of the rolling sub window.		

Menu text	Default settings	Available settings
MEASUREMENT SETUP		
Distance Unit*	km	km/miles
This setting is used to select the unit of distance for fault location purposes, note that the length of the line is preserved when converting from km to miles and vice versa.		
Fault Location*	Distance	Distance/Ohms/% of Line
The calculated fault location can be displayed using one of several options selected using this setting		
Remote2 Values	Primary	Primary or Secondary
The setting defines whether the values measured via the 2nd Rear Communication port are displayed in primary or secondary terms.		

1.4.7 Communications settings

The communications settings apply to the rear communications ports only and will depend upon the particular protocol being used. Further details are given in the SCADA Communications chapter (*P54x/EN SC*).

ST

1.4.7.1 Communications settings for courier protocol

Menu text	Default setting	Setting range		Step size
		Min.	Max.	
COMMUNICATIONS				
RP1 Protocol	Courier			
Indicates the communications protocol that will be used on the rear communications port.				
RP1 Remote Address	255	0	255	1
This cell sets the unique address for the relay such that only one relay is accessed by master station software.				
RP1 Inactivity Timer	15 mins.	1 min.	30 mins.	1 min.
This cell controls how long the relay will wait without receiving any messages on the rear port before it reverts to its default state, including resetting any password access that was enabled.				
RP1 Physical Link	Copper	Copper, Fiber Optic or KBus		
This cell defines whether an electrical EIA(RS)485, fiber optic or KBus connection is being used for communication between the master station and relay. If 'Fiber Optic' is selected, the optional fiber optic communications board will be required.				
RP1 Port Config.	KBus	KBus or EIA(RS)485		
This cell defines whether an electrical KBus or EIA(RS)485 is being used for communication between the master station and relay.				
RP1 Comms. Mode	IEC 60870 FT1.2 Frame	IEC 60870 FT1.2 Frame or 10-Bit No Parity		
The choice is either IEC 60870 FT1.2 for normal operation with 11-bit modems, or 10-bit no parity.				
RP1 Baud Rate	19200 bits/s	9600 bits/s, 19200 bits/s or 38400 bits/s		
This cell controls the communication speed between relay and master station. It is important that both relay and master station are set at the same speed setting.				

ST

1.4.7.2 Communications settings for IEC 60870-5-103 protocol

Menu text	Default setting	Setting range		Step size
		Min.	Max.	
COMMUNICATIONS				
RP1 Protocol	IEC60870-5-103			
Indicates the communications protocol that will be used on the rear communications port.				
RP1 Address	1	0	247	1
This cell sets the unique address for the relay such that only one relay is accessed by master station software.				
RP1 Inactivity Timer	15 mins.	1 min.	30 mins.	1 min.
This cell controls how long the relay will wait without receiving any messages on the rear port before it reverts to its default state, including resetting any password access that was enabled.				
RP1 Baud Rate	19200 bits/s	9600 bits/s or 19200 bits/s		
This cell controls the communication speed between relay and master station. It is important that both relay and master station are set at the same speed setting.				
RP1 Measure't. Period	15 s	1 s	60 s	1 s
This cell controls the time interval that the relay will use between sending measurement data to the master station.				
RP1 Physical Link	Copper	Copper or Fiber Optic		
This cell defines whether an electrical EIA(RS) 485 or fiber optic connection is being used for communication between the master station and relay. If 'Fiber Optic' is selected, the optional fiber optic communications board will be required.				
RP1 CS103 Blocking	Disabled	Disabled, Monitor Blocking, or Command Blocking		
There are three settings associated with this cell: Disabled - No blocking selected. Monitor Blocking - When the monitor blocking DDB Signal is active high, either by energizing an opto input or control input, reading of the status information and disturbance records is not permitted. When in this mode the relay returns a "termination of general interrogation" message to the master station. Command Blocking - When the command blocking DDB signal is active high, either by energizing an opto input or control input, all remote commands will be ignored (i.e. CB Trip/Close, change setting group etc.). When in this mode the relay returns a "negative acknowledgement of command" message to the master station.				

1.4.7.3 Communications settings for DNP3.0 protocol

Menu text	Default setting	Setting range		Step size
		Min.	Max.	
COMMUNICATIONS				
RP1 Protocol	DNP 3.0			
Indicates the communications protocol that will be used on the rear communications port.				
RP1 Address	3	0	65519	1
This cell sets the unique address for the relay such that only one relay is accessed by master station software.				
RP1 Baud Rate	19200 bits/s	1200 bits/s, 2400 bits/s, 4800 bits/s, 9600 bits/s, 19200 bits/s or 38400 bits/s		
This cell controls the communication speed between relay and master station. It is important that both relay and master station are set at the same speed setting.				
RP1 Parity	None	Odd, Even or None		
This cell controls the parity format used in the data frames. It is important that both relay and master station are set with the same parity setting.				
RP1 Physical Link	Copper	Copper or Fiber Optic		
This cell defines whether an electrical EIA(RS) 485 or fiber optic connection is being used for communication between the master station and relay. If 'Fiber Optic' is selected, the optional fiber optic communications board will be required.				
RP1 Time Sync.	Disabled	Disabled or Enabled		
If set to 'Enabled' the DNP3.0 master station can be used to synchronize the time on the relay. If set to 'Disabled' either the internal free running clock, or IRIG-B input are used.				
Meas Scaling.	Primary	Primary, Secondary or Normalized		
Setting to report analog values in terms of primary, secondary or normalized (with respect to the CT/VT ratio setting) values.				
Message Gap (ms)	0	0	50	1
This setting allows the master station to have an interframe gap.				
DNP3.0 Need Time	10 mins	1 min	30 mins	1 min
The duration of time waited before requesting another time sync from the master.				
DNP App Fragment	2048	100	2048	1
The maximum message length (application fragment size) transmitted by the relay.				
DNP App Timeout	2s	1s	120s	1s
Duration of time waited, after sending a message fragment and awaiting a confirmation from the master.				
DNP SBO Timeout	10 s	1 s	10 s	1 s
Duration of time waited, after receiving a select command and awaiting an operate confirmation from the master.				
DNP Link Timeout	60 s	0.1 s	60 s	0.1 s
Duration of time that the relay will wait for a Data Link Confirm from the master. A value of 0 means data link support disabled and 1 to 120 seconds is the timeout setting.				

ST

1.4.7.4 Communications settings for Ethernet port – IEC 61860

Menu text	Default setting	Setting range		Step size
		Min.	Max.	
NIC Protocol	IEC 61850			
Indicates that IEC 61850 will be used on the rear Ethernet port.				
NIC MAC Address	*Ethernet MAC Address*			
Indicates the MAC address of the rear Ethernet port.				
NIC Tunl Timeout	5 mins	1 min	30 mins	1 min
Duration of time waited before an inactive tunnel to MiCOM S1 Studio is reset.				
NIC Link Report	Alarm	Alarm, Event, None		
Configures how a failed/unfitted network link (copper or fiber) is reported: Alarm - an alarm is raised for a failed link Event - an event is logged for a failed link None - nothing reported for a failed link				
NIC Link Timeout	60 s	0.1 s	60 s	0.1 s
Duration of time waited, after failed network link is detected, before communication by the alternative media interface is attempted. See also the IED CONFIGURATOR column for IEC 61850 data.				

1.4.7.5 Communications settings for Ethernet port – DNP3.0

Menu text	Default setting	Setting range		Step size
		Min.	Max.	
NIC Protocol	DNP3.0			
Indicates that DNP 3.0 will be used on the rear Ethernet port.				
IP Address	0.0.0.0			
Indicates the IP address of the relay				
Subnet Mask	0.0.0.0			
Indicates the Subnet address				
NIC MAC Address	*Ethernet MAC Address*			
Indicates the MAC address of the rear Ethernet port.				
Gateway				
Indicates the Gateway address				
DNP Time Sync.	Disabled	Disabled or Enabled		
If set to 'Enabled' the DNP3.0 master station can be used to synchronize the time on the relay. If set to 'Disabled' either the internal free running clock, or IRIG-B input are used.				
NIC Tunl Timeout	5 mins	1 min	30 mins	1 min
Duration of time waited before an inactive tunnel to MiCOM S1 Studio is reset.				

Menu text	Default setting	Setting range		Step size
		Min.	Max.	
NIC Link Report	Alarm	Alarm, Event, None		
Configures how a failed/unfitted network link (copper or fiber) is reported: Alarm - an alarm is raised for a failed link Event - an event is logged for a failed link None - nothing reported for a failed link				
NIC Link Timeout	60 s	0.1 s	60 s	0.1 s
Duration of time waited, after failed network link is detected, before communication by the alternative media interface is attempted.				
SNTP PARAMETERS				
SNTP Server 1	SNTP Server 1 address			
Indicates the SNTP Server 1 address				
SNTP Server 2	SNTP Server 1 address			
Indicates the SNTP Server 2 address				
SNTP Poll Rate	64 s	64 s	1024 s	1 s
Duration of SNTP poll rate in seconds				
DNP3.0 Need Time	10 mins	1 min	30 mins	1 min
The duration of time waited before requesting another time sync from the master				
DNP App Fragment	2048	100	2048	1
The maximum message length (application fragment size) transmitted by the relay.				
DNP App Timeout	2 s	1 s	120 s	1 s
Duration of time waited, after sending a message fragment and awaiting a confirmation from the master.				
DNP SBO Timeout	10 s	1 s	10 s	1 s
Duration of time waited, after receiving a select command and awaiting an operate confirmation from the master.				

ST

1.4.7.6 Rear port 2 connection settings

The settings shown are those configurable for the second rear port which is only available with the courier protocol.

Menu text	Default setting	Setting range		Step size
		Min.	Max.	
COMMUNICATIONS				
RP2 Protocol	Courier			
Indicates the communications protocol that will be used on the rear communications port.				
RP2 Port Config.	EIA(RS)232	EIA(RS)232, EIA(RS)485 or KBus		
This cell defines whether an electrical EIA(RS)232, EIA(RS)485 or KBus is being used for communication.				
RP2 Comms. Mode	IEC 60870 FT1.2 Frame	IEC60870 FT1.2 Frame or 10-Bit No Parity		
The choice is either IEC 60870 FT1.2 for normal operation with 11-bit modems, or 10-bit no parity.				

Menu text	Default setting	Setting range		Step size
		Min.	Max.	
RP2 Address	255	0	255	1
This cell sets the unique address for the relay such that only one relay is accessed by master station software.				
RP2 Inactivity Timer	15 mins.	1 mins.	30 mins.	1 min.
This cell controls how long the relay will wait without receiving any messages on the rear port before it reverts to its default state, including resetting any password access that was enabled.				
RP2 Baud Rate	19200 bits/s	9600 bits/s, 19200 bits/s or 38400 bits/s		
This cell controls the communication speed between relay and master station. It is important that both relay and master station are set at the same speed setting.				

1.4.8 Commissioning tests

ST

There are menu cells which allow the status of the opto-isolated inputs, output relay contacts, internal digital data bus (DDB) signals and user-programmable LEDs to be monitored. Additionally there are cells to test the operation of the output contacts, user-programmable LEDs and, where available, the auto-reclose cycles.

Menu text	Default setting	Available settings
COMMISSION TESTS		
Opto I/P Status	000000000000000000000000	
This menu cell displays the status of the available relay's opto-isolated inputs as a binary string, a '1' indicating an energized opto-isolated input and a '0' a de-energized one.		
Relay O/P Status	0000000000000000	
This menu cell displays the status of the digital data bus (DDB) signals that result in energization of the available output relays as a binary string, a '1' indicating an operated state and '0' a non-operated state. When the 'Test Mode' cell is set to 'Enabled' the 'Relay O/P Status' cell does not show the current status of the output relays and hence can not be used to confirm operation of the output relays. Therefore it will be necessary to monitor the state of each contact in turn.		
Test Port Status	00000000	
This menu cell displays the status of the eight digital data bus (DDB) signals that have been allocated in the 'Monitor Bit' cells.		
Monitor Bit 1	1060 (LED 1)	0 to 1791 See PSL section for details of digital data bus signals
The eight 'Monitor Bit' cells allow the user to select the status of which digital data bus signals can be observed in the 'Test Port Status' cell or via the monitor/download port.		
Monitor Bit 8	1074 (LED 8)	0 to 1791
The eight 'Monitor Bit' cells allow the user to select the status of which digital data bus signals can be observed in the 'Test Port Status' cell or via the monitor/download port.		

Menu text	Default setting	Available settings
Test Mode	Disabled	Disabled, Test Mode, Contacts Blocked
The Test Mode menu cell is used to allow secondary injection testing to be performed on the relay without operation of the trip contacts. It also enables a facility to directly test the output contacts by applying menu controlled test signals. To select test mode the Test Mode menu cell should be set to 'Test Mode', which takes the relay out of service and blocks operation of output contacts and maintenance, counters. It also causes an alarm condition to be recorded and the yellow 'Out of Service' LED to illuminate and an alarm message 'Prot'n. Disabled' is given. This also freezes any information stored in the Circuit Breaker Condition column and in IEC 60870-5-103 builds changes the Cause of Transmission, COT, to Test Mode. To enable testing of output contacts the Test Mode cell should be set to Contacts Blocked. This blocks the protection from operating the contacts and enables the test pattern and contact test functions which can be used to manually operate the output contacts. Once testing is complete the cell must be set back to 'Disabled' to restore the relay back to service.		
Test Pattern	00000000000000000000000000000000	0 = Not Operated 1 = Operated
This cell is used to select the output relay contacts that will be tested when the 'Contact Test' cell is set to 'Apply Test'.		
Contact Test	No Operation	No Operation, Apply Test, Remove Test
When the 'Apply Test' command in this cell is issued the contacts set for operation (set to '1') in the 'Test Pattern' cell change state. After the test has been applied the command text on the LCD will change to 'No Operation' and the contacts will remain in the Test State until reset issuing the 'Remove Test' command. The command text on the LCD will again revert to 'No Operation' after the 'Remove Test' command has been issued. **Note:** When the 'Test Mode' cell is set to 'Enabled' the 'Relay O/P Status' cell does not show the current status of the output relays and hence can not be used to confirm operation of the output relays. Therefore it will be necessary to monitor the state of each contact in turn.		
Test LEDs	No Operation	No Operation Apply Test
When the 'Apply Test' command in this cell is issued the eighteen user-programmable LEDs will illuminate for approximately 2 seconds before they extinguish and the command text on the LCD reverts to 'No Operation'.		
Test Auto-reclose	No Operation	No Operation, Trip 3 Pole, Trip Pole A, Trip Pole B, Trip Pole C
This is a command used to simulate a single pole or three phase tripping in order to test Auto-reclose cycle.		
Static Test	Disabled	Disabled or Enabled
When Static test is **Enabled**, delta phase selectors and the delta directional line are bypassed to allow the user to test the relay with older injection test sets that are incapable of simulating real dynamic step changes in current and voltage. Resulting trip times will be slower, as extra filtering of distance comparators is also switched-in.		
Test Loopback	Disabled	Disabled, Internal, External
Setting that allows communication loopback testing.		
IM64 TestPattern	0000000000000000	
This cell is used to set the DDB signals included in the User Defined Inter-Relay Commands IM64 when the 'IM64 Test Mode' cell is set to 'Enable'.		

ST

Menu text	Default setting	Available settings
IM64 Test Mode	Disabled	Disabled or Enabled
When the **Enable** command in this cell is issued the DDB set for operation (set to '1') in the 'Test Pattern' cell change state.		
Red LED Status	000000000000000000	
This cell is an eighteen bit binary string that indicates which of the user-programmable LEDs on the relay are illuminated with the Red LED input active when accessing the relay from a remote location, a '1' indicating a particular LED is lit and a '0' not lit.		
Green LED Status	000000000000000000	
This cell is an eighteen bit binary string that indicates which of the user-programmable LEDs on the relay are illuminated with the Green LED input active when accessing the relay from a remote location, a '1' indicating a particular LED is lit and a '0' not lit.		
DDB 31 - 0	00000000000000000000001000000000	
Displays the status of DDB signals 0-31.		
DDB 1791 - 1760	00000000000000000000000000000000	
For monitoring all DDB signals up to 1791.		

ST

1.4.9 Circuit breaker condition monitor setup

The following table, detailing the options available for the Circuit Breaker condition monitoring for the P543/P545, is taken from the relay menu. It includes the setup of the ruptured current facility and those features that can be set to raise an alarm, or lockout the CB.

For the P544/P546 there is a similar set of settings duplicated for the second circuit breaker controlled. Although the menu text differs slightly to reflect the monitoring of two circuit breakers (CB1 and CB2), in all other respects the settings are the same.

Menu text	Default setting	Setting range		Step size
		Min.	Max.	
Broken I^	2	1	2	0.1
This sets the factor to be used for the cumulative I^ counter calculation that monitors the cumulative severity of the duty placed on the interrupter. This factor is set according to the type of Circuit Breaker used.				
I^ Maintenance	Alarm Disabled	Alarm Disabled or Alarm Enabled		
Setting which determines if an alarm will be raised or not when the cumulative I^ maintenance counter threshold is exceeded.				
I^ Maintenance	1000In^	1In^	25000In^	1In^
Setting that determines the threshold for the cumulative I^ maintenance counter monitors.				
I^ Lockout	Alarm Disabled	Alarm Disabled or Alarm Enabled		
Setting which determines if an alarm will be raised or not when the cumulative I^lockout counter threshold is exceeded.				
I^ Lockout	2000In^	1In^	25000In^	1In^
Setting that determines the threshold for the cumulative I^ lockout counter monitor. Set that should maintenance not be carried out, the relay can be set to lockout the auto-reclose function on reaching a second operations threshold.				
No CB Ops. Maint.	Alarm Disabled	Alarm Disabled or Alarm Enabled		
Setting to activate the number of circuit breaker operations maintenance alarm.				

Menu text	Default setting	Setting range		Step size
		Min.	Max.	
No CB Ops. Maint.	10	1	10000	1
Sets the threshold for number of circuit breaker operations maintenance alarm, indicating when preventative maintenance is due.				
No CB Ops. Lock	Alarm Disabled	Alarm Disabled or Alarm Enabled		
Setting to activate the number of circuit breaker operations lockout alarm.				
No CB Ops. Lock	20	1	10000	1
Sets the threshold for number of circuit breaker operations lockout. The relay can be set to lockout the auto-reclose function on reaching a second operations threshold.				
CB Time Maint.	Alarm Disabled	Alarm Disabled or Alarm Enabled		
Setting to activate the circuit breaker operating time maintenance alarm.				
CB Time Maint.	0.1 s	0.005 s	0.5 s	0.001 s
Setting for the circuit operating time threshold which is set in relation to the specified interrupting time of the circuit breaker.				
CB Time Lockout	Alarm Disabled	Alarm Disabled or Alarm Enabled		
Setting to activate the circuit breaker operating time lockout alarm.				
CB Time Lockout	0.2 s	0.005 s	0.5 s	0.001 s
Setting for the circuit breaker operating time threshold which is set in relation to the specified interrupting time of the circuit breaker. The relay can be set to lockout the auto-reclose function on reaching a second operations threshold.				
Fault Freq. Lock	Alarm Disabled	Alarm Disabled or Alarm Enabled		
Enables the excessive fault frequency alarm.				
Fault Freq. Count	10	1	9999	1
Sets a circuit breaker frequent operations counter that monitors the number of operations over a set time period.				
Fault Freq. Time	3600 s	0 s	9999 s	1 s
Sets the time period over which the circuit breaker operations are to be monitored. Should the set number of trip operations be accumulated within this time period, an alarm can be raised. Excessive fault frequency/trips can be used to indicate that the circuit may need maintenance attention (e.g. Tree-felling or insulator cleaning).				

ST

1.4.10 Opto configuration

Menu text	Default setting	Setting range		Step size
		Min.	Max.	
OPTO CONFIG.				
Global Nominal V	24 - 27	24 - 27, 30 - 34, 48 - 54, 110 - 125, 220 - 250, Custom		
Sets the nominal battery voltage for all opto inputs by selecting one of the five standard ratings in the Global Nominal V settings. If Custom is selected then each opto input can individually be set to a nominal voltage value.				
Opto Input 1	24 - 27	24 - 27, 30 - 34, 48 - 54, 110 - 125, 220 - 250		
Each opto input can individually be set to a nominal voltage value if custom is selected for the global setting.				

Menu text	Default setting	Setting range		Step size
		Min.	Max.	
Opto Input 2 - 32	24 - 27	24 - 27, 30 - 34, 48 - 54, 110 - 125, 220 - 250		
Each opto input can individually be set to a nominal voltage value if custom is selected for the global setting. The number of inputs may be up to 32, depending on MiCOM P54x model and I/O configuration.				
Opto Filter Cntl.	1111 1111 1111 1111 1011 0111 1111 1011			
Selects each input with a pre-set filter of ½ cycle that renders the input immune to induced noise on the wiring. The number of available bits may be 16, 24 or 32, depending on the I/O configuration.				
Characteristics	Standard 60% - 80%	Standard 60% - 80%, 50% - 70%		
Selects the pick-up and drop-off characteristics of the optos. Selecting the standard setting means they nominally provide a Logic 1 or On value for Voltages ≥80% of the set lower nominal voltage and a Logic 0 or Off value for the voltages ≤60% of the set higher nominal voltage.				

ST

1.4.11 Control inputs

The control inputs function as software switches that can be set or reset either locally or remotely. These inputs can be used to trigger any function that they are connected to as part of the PSL. The setting is not visible if 'Control Inputs' are set invisible under the CONFIGURATION column.

Menu text	Default setting	Setting range	Step size
CONTROL INPUTS			
Ctrl I/P Status	00000000000000000000000000000000		
Cell that is used to set (1) and reset (0) the selected Control Input by simply scrolling and changing the status of selected bits. This command will be then recognized and executed in the PSL. Alternatively, each of the 32 Control input can also be set and reset using the individual menu setting cells as follows:			
Control Input 1	No Operation	No Operation or Set or Reset	
Setting to allow Control Inputs 1 set/ reset.			
Control Input 2 to 32	No Operation	No Operation or Set or Reset	
Cell as for Control Input 1			

1.4.12 Control input configuration

Instead of operating the control inputs as described in the above section, they could also be set to perform a pre-defined control function. This is achieved by mapping in the Hotkey menu. The operating mode for each of the 32 Control Inputs can be set individually.

Menu text	Default setting	Setting range	Step size
CTRL I/P CONFIG.			
Hotkey Enabled	11111111111111111111111111111111		
Setting to allow the control inputs to be individually assigned to the **Hotkey** menu by setting '1' in the appropriate bit in the **Hotkey Enabled** cell. The hotkey menu allows the control inputs to be set, reset or pulsed without the need to enter the **CONTROL INPUTS** column.			
Control Input 1	Latched	Latched, Pulsed	
Configures the control inputs as either 'latched' or 'pulsed'. A latched control input will remain in the set state until a reset command is given, either by the menu or the serial communications. A pulsed control input, however, will remain energized for 10 ms after the set command is given and will then reset automatically (i.e. no reset command required).			
Ctrl Command 1	Set/Reset	Set/Reset, In/Out, Enabled/Disabled, On/Off	
Allows the SET / RESET text, displayed in the hotkey menu, to be changed to something more suitable for the application of an individual control input, such as **ON / OFF**, **IN / OUT** etc.			
Control Input 2 to 32	Latched	Latched, Pulsed	
Configures the control inputs as either 'latched' or 'pulsed'.			
Ctrl Command 2 to 32	Set/Reset	Set/Reset, In/Out, Enabled/Disabled, On/Off	
Allows the SET / RESET text, displayed in the hotkey menu, to be changed to something more suitable for the application of an individual control input, such as **ON / OFF**, **IN / OUT** etc.			

1.4.13 Function keys

Menu text	Default setting	Setting range		Step size
		Min.	Max.	
FUNCTION KEYS				
Fn. Key Status	0000000000			
Displays the status of each function key.				
Fn. Key 1 Status	Unlock/Enable	Disable, Lock, Unlock/Enable		
Setting to activate function key. The 'Lock' setting allows a function key output that is set to toggle mode to be locked in its current active state.				
Fn. Key 1 Mode	Toggle	Toggle, Normal		
Sets the function key in toggle or normal mode. In 'Toggle' mode, a single key press will set/latch the function key output as 'high' or 'low' in programmable scheme logic. This feature can be used to enable/disable relay functions. In the 'Normal' mode the function key output will remain 'high' as long as key is pressed.				
Fn. Key 1 Label	Function Key 1			
Allows the text of the function key to be changed to something more suitable for the application.				

ST

Menu text	Default setting	Setting range		Step size
		Min.	Max.	
Fn. Key 2 to 10 Status	Unlock/Enable	Disable, Lock, Unlock/Enable		
Setting to activate function key. The 'Lock' setting allows a function key output that is set to toggle mode to be locked in its current active position.				
Fn. Key 2 to 10 Mode	Toggle	Toggle, Normal		
Sets the function key in toggle or normal mode. In 'Toggle' mode, a single key press will set/latch the function key output as 'high' or 'low' in programmable scheme logic. This feature can be used to enable/disable relay functions. In the 'Normal' mode the function key output will remain 'high' as long as key is pressed.				
Fn. Key 2 to 10 Label	Function Key 2 to 10			
Allows the text of the function key to be changed to something more suitable for the application.				

ST

1.4.14 IED configurator (for IEC 61850 configuration)

The contents of the IED CONFIGURATOR column are mostly data cells, displayed for information but not editable. In order to edit the configuration, it is necessary to use the IED Configurator tool within MiCOM S1 Studio.

Menu text	Default setting	Setting range		Step size
		Min.	Max.	
IED CONFIGURATOR				
Switch Conf.Bank	No Action	No Action, Switch Banks		
Setting which allows the user to switch between the current configuration, held in the Active Memory Bank (and partly displayed below), to the configuration sent to and held in the Inactive Memory Bank.				
Active Conf.Name	Data			
The name of the configuration in the Active Memory Bank, usually taken from the SCL file.				
Active Conf.Rev	Data			
Configuration Revision number of the configuration in the Active Memory Bank, usually taken from the SCL file.				
Inact.Conf.Name	Data			
The name of the configuration in the Inactive Memory Bank, usually taken from the SCL file.				
Inact.Conf.Rev	Data			
Configuration Revision number of the configuration in the Inactive Memory Bank, usually taken from the SCL file.				
IP PARAMETERS				
IP Address	Data			
Displays the unique network IP address that identifies the relay.				
Subnet Mask	Data			
Displays the sub-network that the relay is connected to.				
Gateway	Data			
Displays the IP address of the gateway (proxy) that the relay is connected to, if any.				

Menu text	Default setting	Setting range		Step size
		Min.	Max.	
SNTP PARAMETERS				
SNTP Server 1	Data			
Displays the IP address of the primary SNTP server.				
SNTP Server 2	Data			
Displays the IP address of the secondary SNTP server.				
IEC61850 SCL				
IED Name	Data			
8 character IED name, which is the unique name on the IEC 61850 network for the IED, usually taken from the SCL file.				
IEC61850 GOOSE				
GoID	Data			
64 character GOOSE Identifier, used for naming the published GOOSE message. Default GoID is TEMPLATESystem/LLN0GOgcbST.				
GoEna	Disabled	Disabled, Enabled		
Setting to enable GOOSE publisher settings.				
Test Mode	Disabled	Disabled, Pass Through, Forced		
The Test Mode cell allows the test pattern to be sent in the GOOSE message, for example for testing or commissioning. When 'Disabled' is selected, the test flag is not set. When 'Pass Through' is selected, the test flag is set, but the data in the GOOSE message is sent as normal. When 'Forced' is selected, the test flag is set, and the data sent in the GOOSE message is as per the 'VOP Test Pattern' setting below. Once testing is complete the cell must be set back to 'Disabled' to restore the GOOSE scheme back to normal service.				
VOP Test Pattern	0x00000000	0x00000000	0xFFFFFFFF	1
The 32 bit test pattern applied in 'Forced' test mode.				
Ignore Test Flag	No	No, Yes		
When set to 'Yes', the test flag in the subscribed GOOSE message is ignored, and the data treated as normal.				

ST

1.4.15 Control input labels

Menu text	Default setting	Setting range	Step size
CTRL I/P LABELS			
Control Input 1	Control Input 1	16 Character Text	
Setting to change the text associated with each individual control input. This text will be displayed when a control input is accessed by the hotkey menu, or it can be displayed in the programmable scheme logic.			
Control Input 2 to 32	Control Input 2 to 32	16 Character Text	
Setting to change the text associated with each individual control input. This text will be displayed when a control input is accessed by the hotkey menu, or it can be displayed in the programmable scheme logic.			

ST

1.4.16 Direct access (breaker control and “hotkeys”)

The Direct Access keys are the **0** and **1** keys situated directly below the LCD display. The user may assign the function of these two keys, to signal direct commands into the PSL logic. Two modes of use exist:

- Tripping and Closing commands to the circuit breaker
- **Hotkey** functions, whereby a mini menu of frequently required commands and operations is accessed. Operators can then easily access the required command, without needing to navigate the full relay menu.

Menu text	Default setting	Setting range	Step size
CONFIGURATION			
Direct Access	Enabled	Disabled, Enabled, Hotkey only, or CB Ctrl Only	
The front direct access keys that are used as a short cut function of the menu may be: Disabled – No function visible on the LCD Enabled – All control functions mapped to the Hotkeys and Control Trip/Close are available Hotkey Only – Only control functions mapped to the Hotkeys are available on the LCD CB Ctrl Only – Only Control Trip/Control Close command will appear on the relay’s LCD			

1.5 Disturbance recorder settings (oscillography)

The disturbance recorder settings include the record duration and trigger position, selection of analog and digital signals to record, and the signal sources that trigger the recording.

The **DISTURBANCE RECORDER** menu column is shown in the following table:

Menu text	Default setting	Setting range		Step size
		Min.	Max.	
DISTURB. RECORDER				
Duration	1.5 s	0.1 s	10.5 s	0.01 s
This sets the overall recording time.				
Trigger Position	33.3%	0	100%	0.1%
This sets the trigger point as a percentage of the duration. For example, the default settings show that the overall recording time is set to 1.5 s with the trigger point being at 33.3% of this, giving 0.5 s pre-fault and 1s post fault recording times.				
Trigger Mode	Single	Single or Extended		
If set to single mode, if a further trigger occurs whilst a recording is taking place, the recorder will ignore the trigger. However, if this has been set to **Extended**, the post trigger timer will be reset to zero, thereby extending the recording time.				
Analog. Channel 1	VA	IA, IB, IC, IN, IN Sensitive, VA, VB, VC, IM V Checksync (only for P543 and P545) and IA2, IB2, IC2 , IN2, VChecksync2 (only for P544 and P546)		
Selects any available analog input to be assigned to this channel (including derived IN residual current).				

Menu text	Default setting	Setting range		Step size
		Min.	Max.	
Analog. Channel 2	VB	As above		
Analog. Channel 3	VC	As above		
Analog. Channel 4	IA	As above		
Analog. Channel 5	IB	As above		
Analog. Channel 6	IC	As above		
Analog. Channel 7	IN	As above		
Analog. Channel 8	IN Sensitive	As above		
Digital Inputs 1 to 32	Relays 1 to 14(32) and Opto's 1 to 16(24)	Any O/P Contact, Any Opto Inputs, or Internal Digital Signals		
The digital channels may monitor any of the opto isolated inputs or output contacts, in addition to a number of internal relay digital signals, such as protection starts, LEDs etc.				
Inputs 1 to 32 Trigger	No Trigger except Dedicated Trip Relay 3 operation which are set to Trigger L/H	No Trigger, Trigger L/H, Trigger H/L		
Any of the digital channels may be selected to trigger the disturbance recorder on either a low to high or a high to low transition.				
Analog. Channel 9	V Checksync	As above		
Analog. Channel 10	IM (P543/5) IA2 (P544/6)	As above		
Analog. Channel 11	IN (P543/5) IB2 (P544/6)	As above		
Analog. Channel 12	IN (P543/5) IC2 (P544/6)	As above		

ST

ST

OP

OPERATION

Date:	**16th March 2009**
Hardware suffix:	**K**
Software version:	**45 (P543/4/5/6 without Distance)** **55 (P543/4/5/6 with Distance)**
Connection diagrams:	**10P54302 (SH 1 to 2)** **10P54303 (SH 1 to 2)** **10P54400** **10P54404 (SH 1 to 2)** **10P54405 (SH 1 to 2)** **10P54502 (SH 1 to 2)** **10P54503 (SH 1 to 2)** **10P54600** **10P54604 (SH 1 to 2)** **10P54605 (SH 1 to 2)** **10P54606 (SH 1 to 2)**

OP

CONTENTS

OP

OP

OP

OP

OP

OP

FIGURES

OP

AR FIGURES

1. OPERATION OF INDIVIDUAL PROTECTION FUNCTIONS

The MiCOM P54x is a line protection relay that includes phase differential protection on a per phase basis and optionally comprehensive full scheme distance protection. Each one of these protection functions can be selected to work separately or simultaneously. The distance protection can also be set to operate upon failure of the relay protection communications. With the inclusion of Aided Directional Earth fault (DEF) the MiCOM P54x is a fully comprehensive and versatile line protection relay.

The following sections detail the individual protection functions.

1.1 Phase differential characteristics

MiCOM P54x calculates the difference between the currents entering and leaving a protected zone. The protection operates when this difference exceeds a set threshold.

Differential currents can also be generated during external fault conditions due to CT saturation. To provide stability for through fault conditions, the relay adopts a biasing technique. This method effectively raises the setting of the relay in proportion to the value of through fault current to prevent relay maloperation. Figure 1 shows the operating characteristics of the P54x phase differential element.

The differential current is calculated as the vector summation of the currents entering the protected zone. The bias current is the average of the measured current at each line end. It is found by the scalar sum of the current at each terminal, divided by two.

Each of these calculations is done on a phase by phase basis. The level of bias used for each element is the highest of the three calculated for optimum stability.

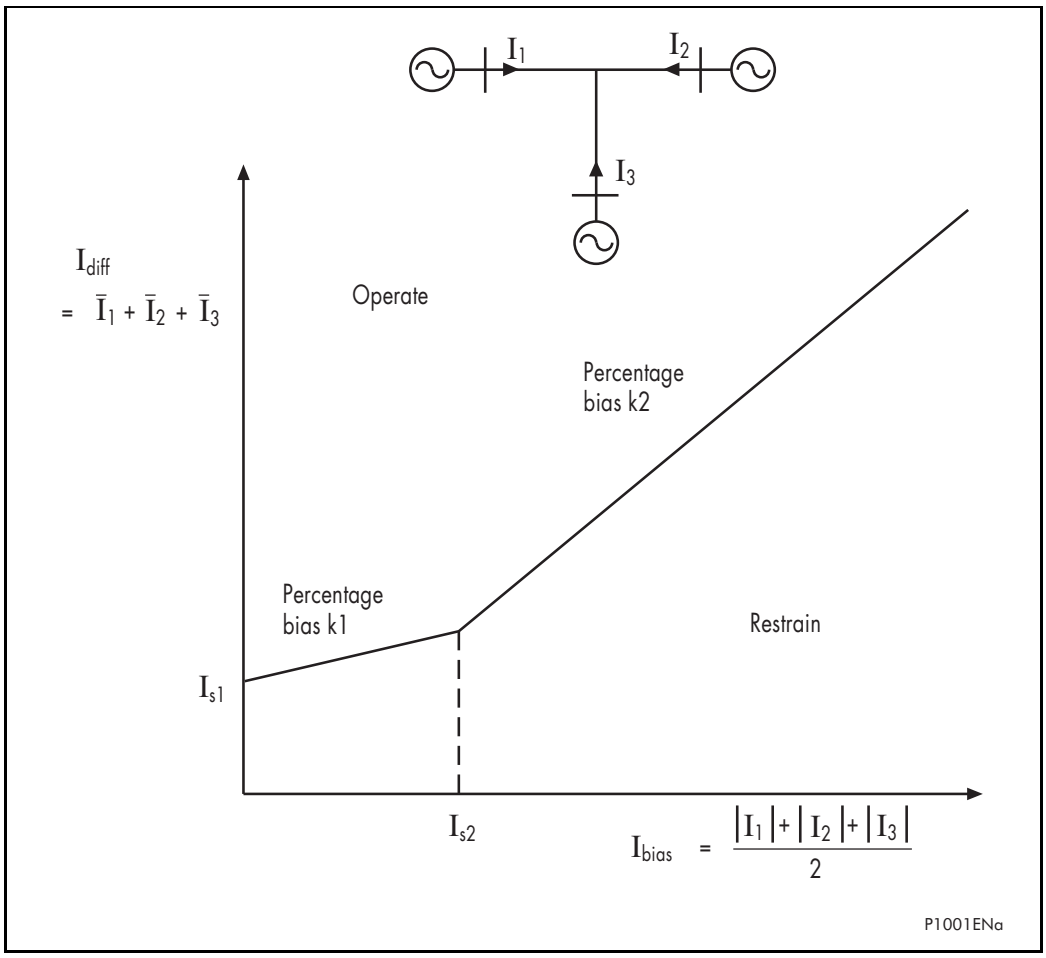

Figure 1 Relay bias characteristic

The characteristic is determined by four protection settings:

Is1 The basic differential current setting which determines the minimum pick-up level of the relay.

k1 The lower percentage bias setting used when the bias current is below Is2. This provides stability for small CT mismatches, whilst ensuring good sensitivity to resistive faults under heavy load conditions.

Is2 A bias current threshold setting, above which the higher percentage bias k2 is used.

k2 The higher percentage bias setting used to improve relay stability under heavy through fault current conditions.

The tripping criteria can be formulated as:

1. For |Ibias| < Is2,

   |Idiff| > k1.| Ibias| + Is1

2. For |Ibias| > Is2,

   |Idiff| > k2.| Ibias| - (k2 - k1). Is2 + Is1

OP

When a trip is issued by the differential element, in addition to tripping the local breaker, the relay will send a differential intertrip signal to the remote terminals. This will ensure tripping of all ends of the protected line, even for marginal fault conditions.

The differential protection can be time delayed using either a definite or inverse time characteristic.

The Id High Set element is an unrestrained element designed to provide high speed operation in the event of CT saturation. Where transformer inrush restraint is used, the resultant second harmonic current produced from CT saturation may cause slow relay operation. The high set element will be automatically enabled when inrush restraint is enabled, otherwise it is not operational.

The logic diagram for Differential protection is shown in Figure 2

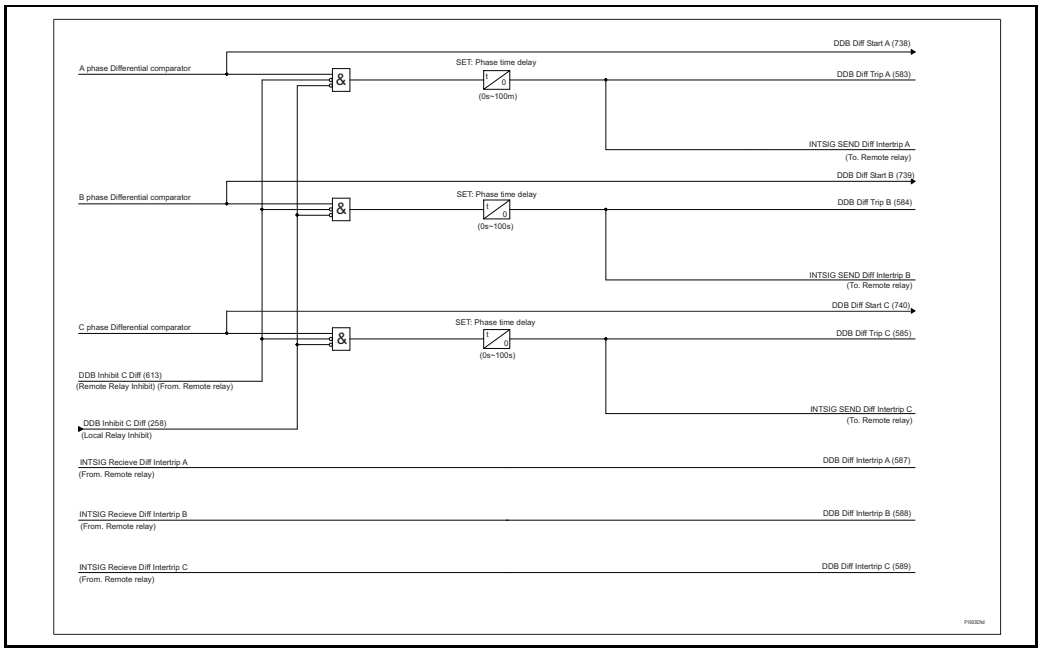

Figure 2 Differential logic diagram

1.1.1 Time alignment of current vectors

1.1.1.1 Time alignment of current vectors without GPS input (traditional technique)

This section relates to P54x relays when the GPS synchronization is not used.

To calculate differential current between line ends it is necessary that the current samples from each end are taken at the same moment in time. This can be achieved by time synchronizing the sampling, or alternatively, by the continuous calculation of the propagation delay between line ends. The P54x range of relays has adopted this second technique.

Consider a two-ended system as shown in Figure 3.

Two identical relays, A and B are placed at the two ends of the line. Relay A samples its current signals at time tA1, tA2 etc., and relay B at time tB1, tB2 etc.

Note: The sampling instants at the two ends will not, in general, be coincidental or of a fixed relationship, due to slight drifts in sampling frequencies.

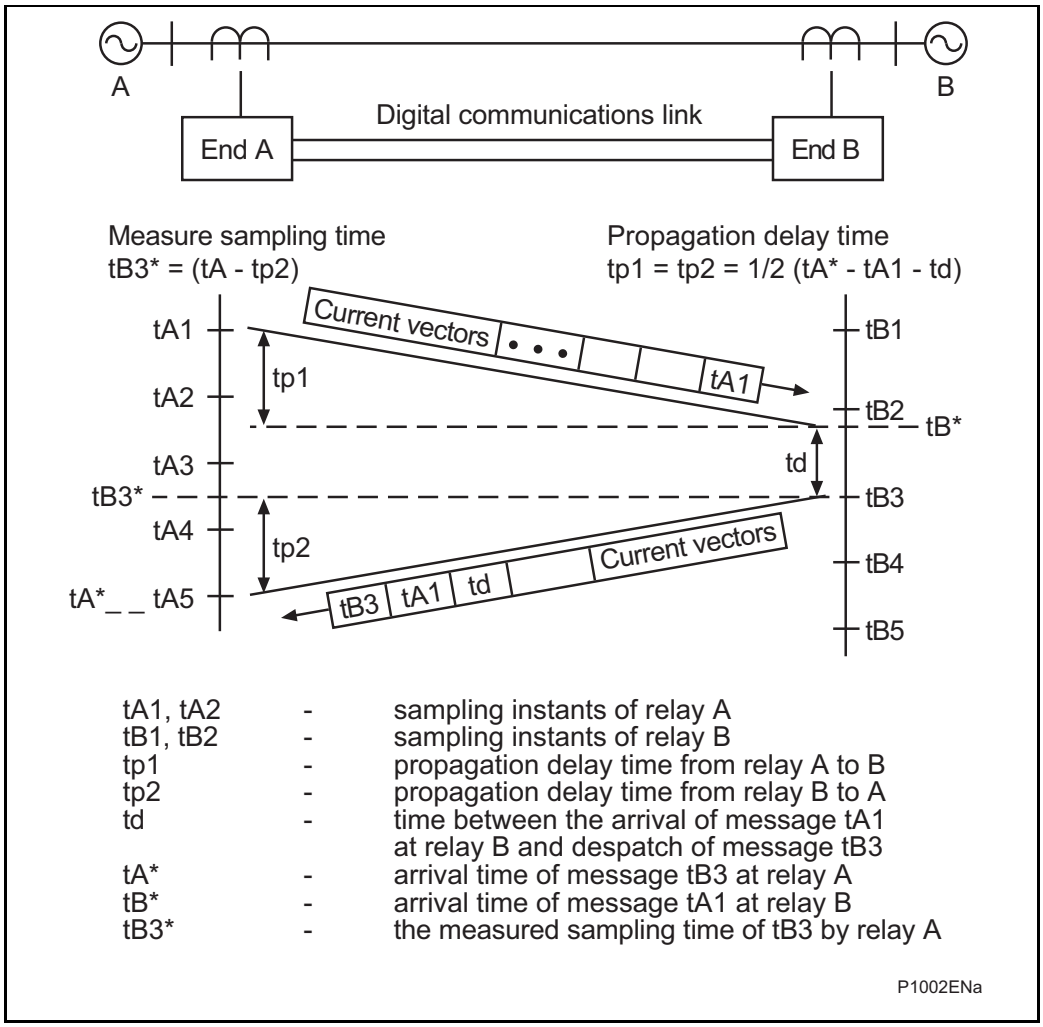

Figure 3 Propagation delay measurement

Assume that at time tA1, relay A sends a data message to relay B. The message contains a time tag, tA1, together with other timing and status information and the current vector values calculated at tA1. The message arrives at end B after a channel propagation delay time, tp1. Relay B registers the arrival time of the message as tB*.

OP

Since relays A and B are identical, relay B also sends out data messages to end A. Assume relay B sends out a data message at tB3. The message therefore contains the time tag tB3. It also returns the last received time tag from relay A (i.e. tA1) and the delay time, td, between the arrival time of the received message, tB*, and the sampling time, tB3, i.e. td = (tB3 - tB*).

The message arrives at end A after a channel propagation delay time, tp2. Its arrival time is registered by relay A as tA*. From the returned time tag, tA1, relay A can measure the total elapsed time as (tA* - tA1). This equals the sum of the propagation delay times tp1, tp2 and the delay time td at end B.

Hence,

(tA* - tA1) = (td + tp1 + tp2)

The relay assumes that the transmit and receive channels follow the same path and so have the same propagation delay time. This time can therefore be calculated as:

tp1 = tp2 = ½(tA* - tA1 - td)

Note: The propagation delay time is measured for each received sample and this can be used to monitor any change on the communication link.

As the propagation delay time has now been deduced, the sampling instant of the received data from relay B (tB3*) can be calculated. As shown in Figure 3, the sampling time tB3* is measured by relay A as:

tB3* = (tA* - tp2)

In Figure 3, tB3* is between tA3 and tA4. To calculate the differential and bias currents, the vector samples at each line end must correspond to the same point in time. It is necessary therefore to time align the received tB3* data to tA3 and tA4. This can be achieved by rotating the received current vector by an angle corresponding to the time difference between tB3* and tA3 (and tA4). For example a time difference of 1ms would require a vector rotation of 1/20 * 360° = 18° for a 50 Hz system.

As two data samples can be compared with each data message, the process needs to be done only once every two samples, therefore reducing the communication bandwidth required.

Note: The current vectors of the three phases need to be time aligned separately.

1.1.1.2 Time alignment of current vectors with GPS input (all models)

The effect of the deployment of switched SDH (Synchronous Digital Hierarchy) networks on telecommunications circuits used in the application of numerical current differential protection to transmission lines.

Such telecommunications networks can be deployed in flexible, self-healing topologies. Typically, ring network topologies are employed and these are characterized by the ability to self-heal in the event of a failure of an interconnection channel.

Consider a simple ring topology with 6 nodes, A - F, and consider two equipment situated at nodes B and C. Under healthy conditions equipment at B communicates with equipment at C directly between nodes B and C and equipment at C communicates with equipment at B directly between nodes C and B. In this condition the communications propagation time between nodes B and C will be the same as that between nodes C and B and so the traditional technique described in could be used to apply numerical current differential protection (see Figure 4).

If the link fails in one direction, say between the transmitter at node B and the receiver at node C, the self-healing ring can continue to transfer signals from node B to node C via the standby route through nodes B, A, F, E, D and then C (obviously a longer path). In this case the communication propagation delay times between nodes B and C differ in the two directions, and if the difference is greater than 1ms the traditional time alignment technique described in section 1.1.1.1 is no longer adequate.

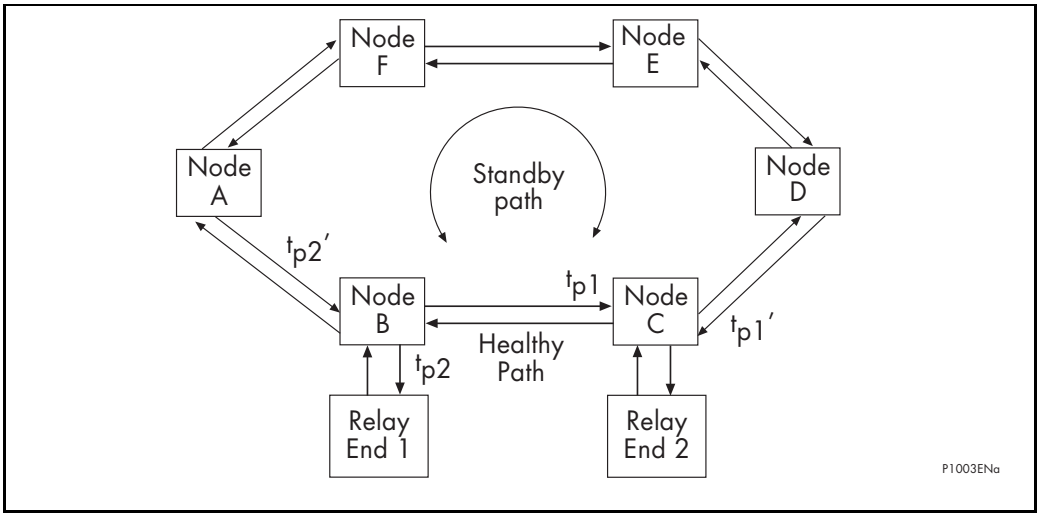

Figure 4 Example of switched synchronous digital hierarchy

P54x make use of the timing information available from the GPS system to overcome the limitation of the traditional technique, and therefore allow application to communications that can provide a permanent or semi-permanent split path routing.

A 1 pulse per second output from a GPS receiver is used to ensure that the re-sampling of the currents at each relay occurs at the same instant in time. The technique is therefore not dependant on equal transmit and receive propagation delay times; changes in one or both of the propagation delay times also do not cause problems. These factors make it suitable for use with switched SDH networks.

The GPS technique is taken further, however, to overcome concerns about the reliability of the GPS system. Consider a similar two ended system to that of Figure 3 where the re-sampling instants (tAn, tBn) are synchronized using the GPS timing information. Here the re-sampling instants at the two ends will be coincidental as shown in Figure 5.

Note: Figure 5 demonstrates a case where the communications path propagation delay times are not the same.

OP

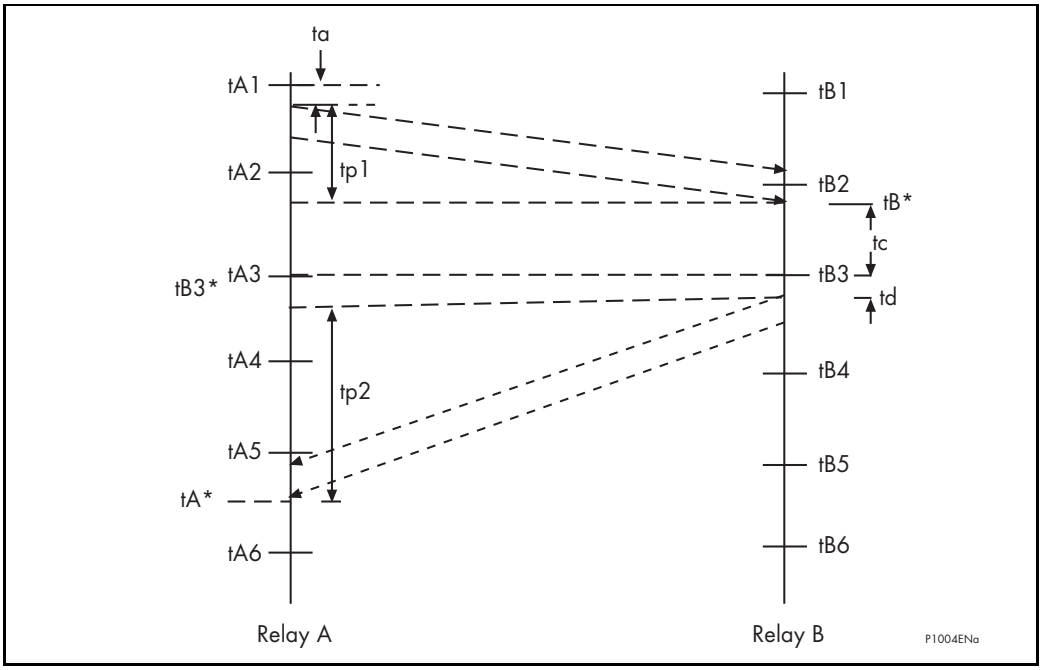

OP

Figure 5 Data transmission

Note : Relay A can measure the total elapsed time = (tA* - tA1). This equals the sum of the propagation delay times tp1 and tp2, the delay in sending out the initial message ta, and the delay time tc+td at end B. Hence

tp1 + tp2 = tA* - tA1 - ta - tc - td

However, because of the GPS synchronization of the re-sampling instants, tA3 is at the same instant as tB3 (therefore tB3* = tA3) we can use this knowledge to calculate the receive path delay

tp2= tA* - tA3 – td

And, by the same process the relay can also calculate tp1.

In the event of the GPS synchronizing signal becoming unavailable, the synchronization of the re-sampling instants at the different ends will be lost and the sampling will become asynchronous. However, time alignment of the current data will now be performed, by using the memorized value of propagation delay times prior to the GPS outage (tp2 in relay A and tp1 in relay B -Figure 4). Each relay also keeps measuring the overall propagation delay, tp1+tp2. As long as the overall propagation delay does not exceed the setting value under PROT COMMS/IM64/Comm Delay Tol, it is considered that the communication path has not been switched, tp2 and tp1 at the two ends remains valid and the differential protection remains active. If the overall propagation delay exceeds the above mentioned setting, the differential protection will be inhibited. This patented “fallback” strategy ensures protection continuity even in the event of antenna vandalism, maintenance error, extremely adverse atmospheric conditions etc – all of which could result in GPS outage.

Note: tp1 and tp2 do not need to be equal for the fallback strategy to become operational.

1.1.2 Capacitive charging current (all models)

The charging current of a line or cable will be seen as differential current. If this current is of a sufficiently high magnitude, as is the case for cables and long feeders, then relay maloperation could occur. Two issues are apparent with charging current; the first being inrush during line energization and the second being steady state charging current.

Inrush charging current is predominately high order harmonics (9th and 11th for example). The Fourier filtering used by the P54x relays will remove these frequency components and hence provide stability.

Steady state charging current is nominally at fundamental frequency and hence may cause relay maloperation.

To overcome this problem the P54x relays include a feature to extract the charging current from the measured current before the differential quantity is calculated.

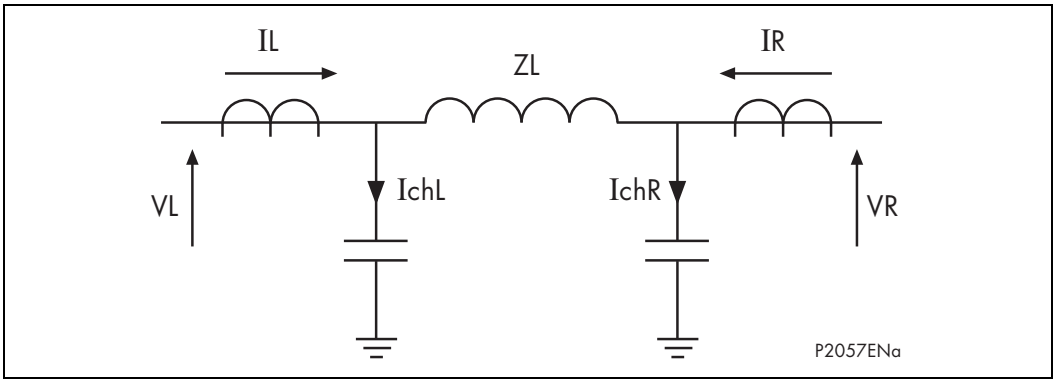

Figure 6 Capacitive charging current

IL = Local end line current

Ir = Remote end line current

VL = Local end voltage

VR = Remote end voltage

ZL = Line impedance

IchL = Local end charging current

IchR = Remote end charging current

By considering Figure 6 it is evident that the line charging current at a particular location is equal to the voltage at that location multiplied by the line positive sequence susceptance. It is therefore possible for the relays at each line end to calculate the respective line charging currents and compensate accordingly.

The differential current (Id) can be calculated as follows:

Id = IL + IR - (jVLBS/2) - (jVRBS/2)

Id = {IL - (jVLBS/2)} + {IR - (jVRBS/2)}

Id = Local relay current + remote relay current

Where BS is the line positive sequence susceptance.

This feature can be selectively enabled or disabled. If selected, the normal phase current data in the protection message is replaced by {I - (jVBS/2)}.

OP

When applying a three end scheme with ends local (L), remote 1 (R1) and remote 2 (R2), the differential current is calculated as follows:

Id = IL + IR1 + IR2 - (jVL Bs/3) - (jVR1 Bs/3) - (jV R2 Bs/3)

Id = {IL - (jVL Bs/3) } + {I R1 - (jV R1 Bs/3) }+ {I R2 - (jV R2 Bs/3) }

Id = Local relay current + remote 1 relay current + remote 2 relay current

Where Bs is the total teed line positive sequence susceptance

i.e. Bs = Bs from L-Tee + Bs from R1 – Tee + Bs from R2 - Tee

The display of currents in the 'Measurements 3' column will be affected by this feature when selected.

1.1.3 CT ratio correction (all models)

To ensure correct operation of the differential element, it is important that under load and through fault conditions, the currents into the differential element of the relay balance. There are many cases where CT ratios at each end of the differential protection are different. Ratio correction factors are therefore provided. The CT ratio correction factors are applied to ensure that the signals to the differential algorithm are correct.

OP

1.1.4 Protection of transformer feeders (P543 and P545)

MiCOM P543/P545 relays can be applied when transformers are located in the differential zone. In order to obtain the correct performance of the relay for this application, MiCOM P543/P545 is provided with:

- Phase compensation to take unto account any phase shift across the transformer, possible unbalance of signals from current transformers either side of windings, and the effects of the variety of earthing and winding arrangements. In P543 and P545, software interposing CTs (ICTs) are provided to give the required compensation.
- Inrush restrain to cater for high levels of magnetizing current during inrush conditions.
- CT ratio correction factor as mentioned in section 1.1.3 to match the transformer winding rated currents if needed.

Note: The P544 and P546 relays do not include any of the above features, except CT ratio mismatch compensation, and as such would not be suitable for the protection of in-zone transformer feeders.

On P543 or P545 relays where capacitive charging current compensation is available, there is a setting to select if capacitive charging current compensation is used or if interposing CTs are used.

1.1.4.1 Transformer magnetizing inrush and high set differential setting (P543/P545)

The magnetizing inrush current to a transformer appears as a large operating signal to the differential protection. Special measures are taken with the relay design to ensure that no maloperation occurs during inrush.

Figure 7 shows a transformer magnetizing characteristic. To minimize material costs, weight and size, transformers are generally operated near to the ‘knee point’ of the magnetizing characteristic. Consequently, only a small increase in core flux above normal operating levels will result in a high magnetizing current.

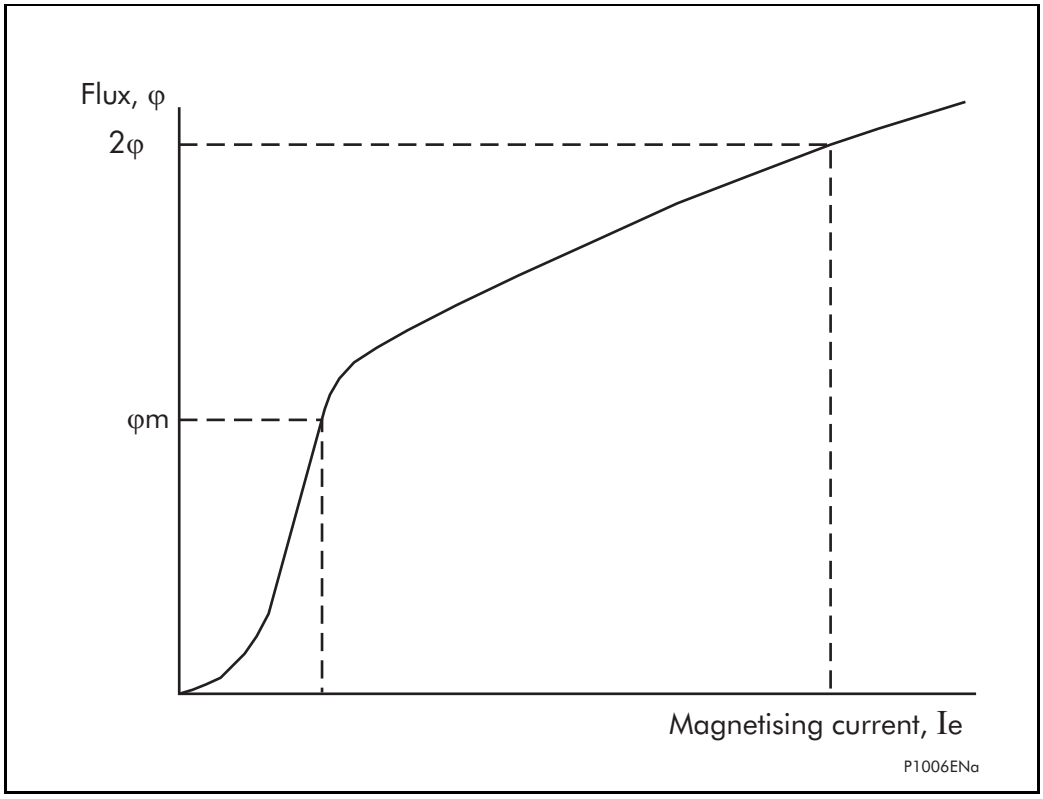

Figure 7 Transformer magnetizing characteristic

Under normal steady state conditions, the magnetizing current associated with the operating flux level is relatively small (usually less than 1% of rated current). However, if a transformer winding is energized at a voltage zero, with no remnant flux, the flux level during the first voltage cycle (2 x normal max. flux) will result in core saturation and in a high, non-sinusoidal magnetizing current waveform. This current is commonly referred to as magnetizing inrush current and may persist for several cycles. The magnitude and duration of magnetizing inrush current waveforms are dependent upon a number of factors, such as transformer design, size, system fault level, point on wave of switching, number of banked transformers, etc. Figure 8 shows typical transformer magnetizing currents for steady state and inrush conditions.

The magnetizing inrush current contains a high percentage of second harmonic. The P543 and P545 relays filter out this component of the waveform and use it as an additional bias quantity. The total bias used by the relay will therefore be a combination of the average load current on the line plus a multiple of the second harmonic component of the current. The multiplying factor is used to ensure stability and is a factory pre-set value.

Where P543 and P545 relays are used and inrush restrain function is enable, it must be ensure that this function is enabled at each end to avoid possible maloperation.

High set differential setting:

When inrush restrain is enabled, a high set differential protection becomes active. This unrestrained instantaneous 'Id High Set ' is provided to ensure rapid clearance for heavy internal faults with saturated CTs. The high set is not restrained by magnetizing inrush. A setting range 4In -32In (RMS values) is provided on P543 and P545

OP

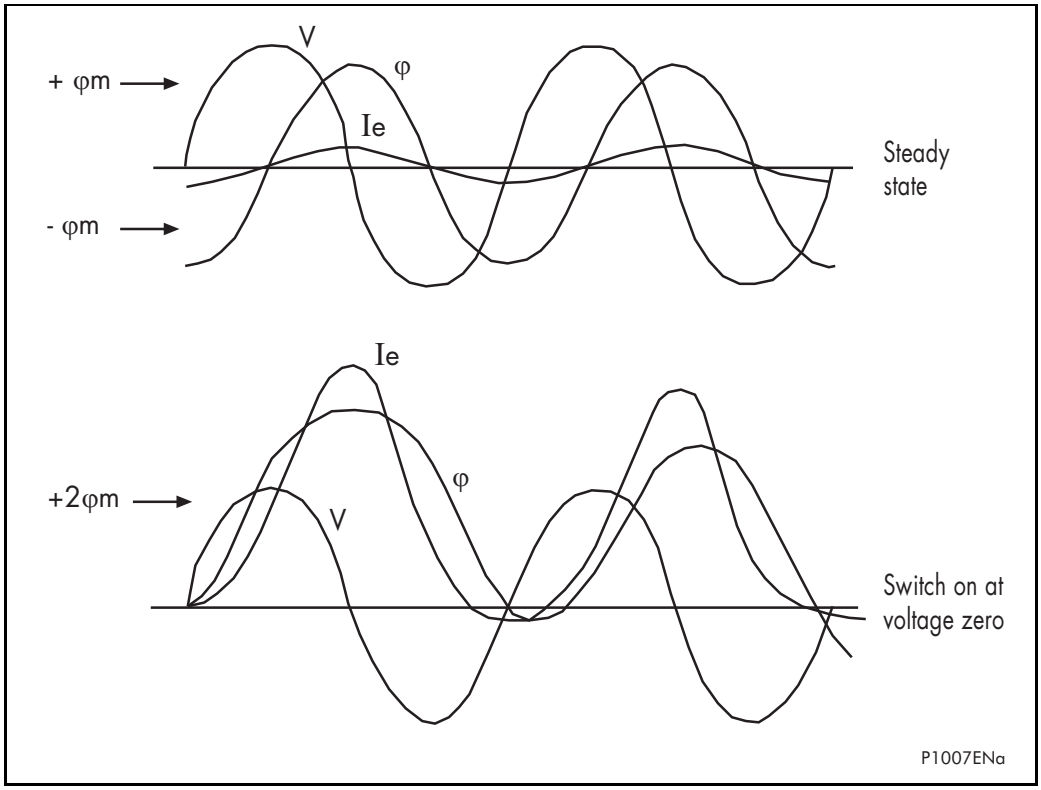

Figure 8 Magnetizing inrush waveforms

OP

1.1.4.2 Phase correction and zero sequence current filtering

To compensate for any phase shift between two windings of a transformer, it is necessary to provide phase correction. This was traditionally provided by the appropriate delta connection of main line CTs. Phase correction is provided in the P54x relays via software interposing CTs.

In addition to compensating for the phase shift of the protected transformer, it is also necessary to mimic the distribution of primary zero sequence current in the protection scheme.

The advantage of having replica interposing CTs is that it gives the P54x relays the flexibility to cater for line CTs connected in either star or delta, as well as being able to compensate for a variety of system earthing arrangements

Figure 9 shows the need for zero sequence current filtering for differential protection across a transformer. The power transformer delta winding acts as a ‘trap’ to zero sequence current. This current is therefore only seen on the star connection side of the transformer and hence as differential current.

The filtering of zero sequence current has traditionally been provided by appropriate delta connection of main line CT secondary windings. In the P54x relays, zero sequence current filtering is automatically implemented in software when a delta connection is set for a software interposing CT. Where a transformer winding can pass zero sequence current to an external earth fault, it is essential that some form of zero sequence current filtering is employed. This would also be applicable where in zone earthing transformers are used.

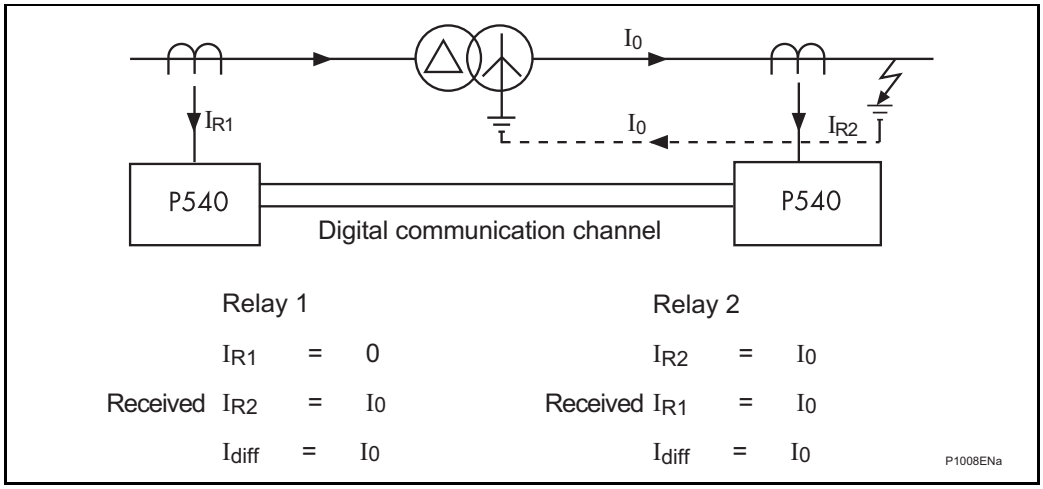

Figure 9 Need for zero-sequence current filtering

1.1.5 3 to 2 terminal reconfiguration

The P54x relays can be configured for the protection of two or three terminal lines. This allows any of the relays to be applied to a two-ended line which may be converted to a three terminal line at a later date. Since only the 'configuration' setting needs to be changed to configure the relay for two or three terminal operation, no hardware changes are required when the third terminal is added, provided that 2 channels of fiber optics are already fitted.

OP

For operational reasons, it may be necessary, under certain circumstances, to switch out one line end and its associated relay on a three terminal circuit. By altering the 'Reconfiguration' setting at any end of the line, an operator can command any pair of relays to work as a two terminal system. The 'configured out' relay can then be switched off, leaving the line to be protected by the other two relays. A restore command can be issued to reconfigure the system back to three terminal operation.

Four reconfiguration settings are available:

- Three ended
- Two ended local and remote 1 (L & R1)
- Two ended local and remote 2 (L & R2)
- Two ended remote 1 and remote 2 (R1 & R2)

Before a configuration command can be successfully initiated, it is necessary to energize the 'reconfiguration interlock' and 'Inhibit Current Differential' opto isolated inputs. The latter input will disable tripping via the current differential elements from all three relays to ensure that the scheme will remain stable during reconfiguration.

It must be ensured that the line end to be 'configured out' is open before issuing a reconfiguration command. If this is not done, any current flowing in or out of the 'configured out' end will be seen as fault current and may cause the other relays to operate.

If the new configuration setting issued to the local relay is L & R1 or L & R2, the trip outputs of the two '2-ended' relays will remain inhibited by the 'Inhibit Current Differential' input at the local relay. The 'inhibit trip/alarm outputs' opto should be de-energized to enable the trip outputs reconfigured scheme. If the new configuration setting is R1 & R2, the output contacts of the two remote relays will not be inhibited as they will ignore all commands from the local relay.

The scheme may be restored to a three terminal configuration by selecting 'three ended' at any terminal. This will occur irrespective of the status of the opto inputs but is subject to a healthy communications channel being detected.

1.1.6 Mesh corner and 1½ breaker switched substations

If differential protection is applied in a mesh corner or 1½ breaker switched substation, a P544 or P546 should be preferred to use it as they do have two independent CT inputs and therefore each one generates its own restrain. See also *P54x/EN AP*.

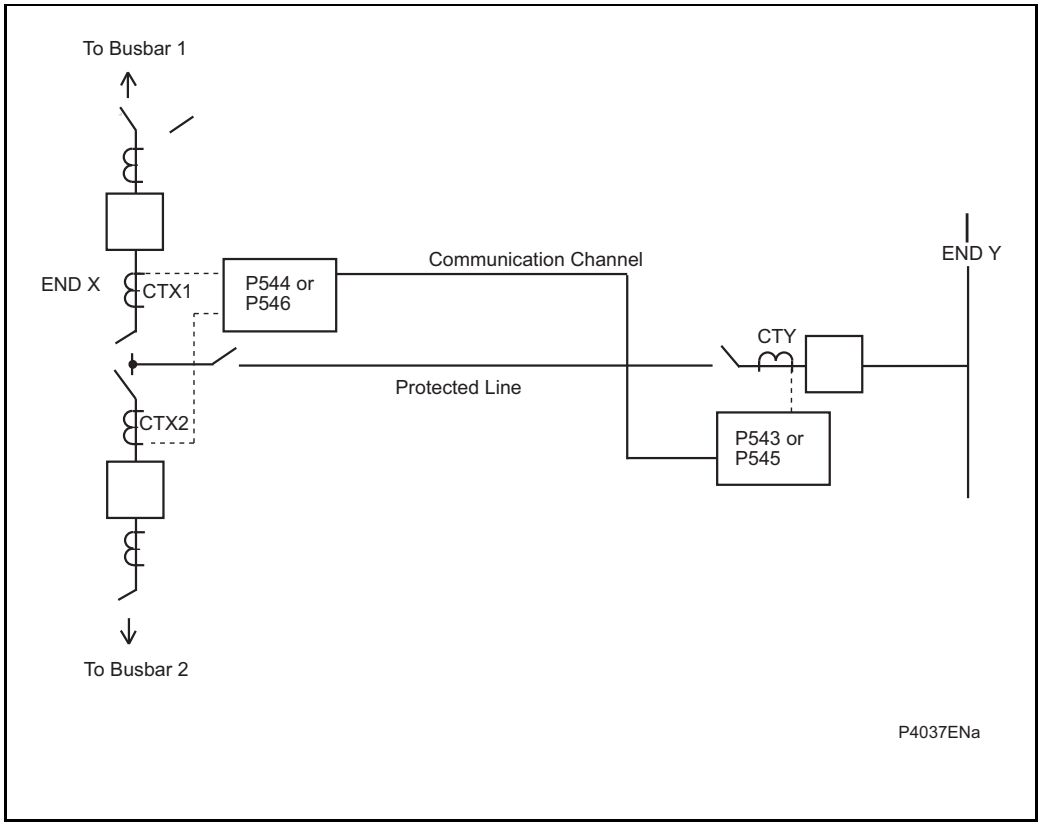

Figure 10 Breaker and a half application

As shown in Figure 10, a P544 or P546 relay should be used at the End X as the line is fed from a breaker and a half substation configuration. At End Y, a P543 or P545 should be installed.

Relay calculations for differential and bias currents are as follows for this case are as follows:

At End X

I diff = $\bar{I}_{CTX1} + \bar{I}_{CTX2} + \bar{I}_{CTY}$

I bias = ($|I_{CTX1}| + |I_{CTX2}|$ + (Additional bias if non zero) or $|I_{REMOTE}|$)/2

In this case Additional bias is zero as the P54x at the remote end has one single CT (P543 or P545).

Additional bias (to be sent to end Y) = is calculated on a per phase basis by scalar summing both local currents (ICTX1 and ICTX2) and selecting the largest of the three calculated. This current is included in the transmitted message.

At End Y

I diff = $\bar{I}_{CTY} + \bar{I}_{CTX1} + \bar{I}_{CTX2}$

I bias = ($|I_{CTY}|$ + (Additional bias if non zero) or $|I_{REMOTE}|$)/2

In this case Additional bias is the one sent by End X (relay with two CT inputs; P544 - P546).

OP

1.1.7 Stub bus protection

The P54x relays include a facility to provide stub bus protection. When the line isolator is open, an auxiliary contact from the isolator can energize an input on the relay to enable this protection. When stub bus mode is enabled, **all current values transmitted to the remote relays, and all those received from remote relays, are set to zero.** The protection will now provide **differential protection for the stub zone**.

The local biased protection will operate as normal using the local currents with the exception that no differential, or permissive intertrips will be sent to the remote relay(s) and all such intertrips received will be ignored and also any trip will be 3 pole only. Direct Intertrips still operate as normal.

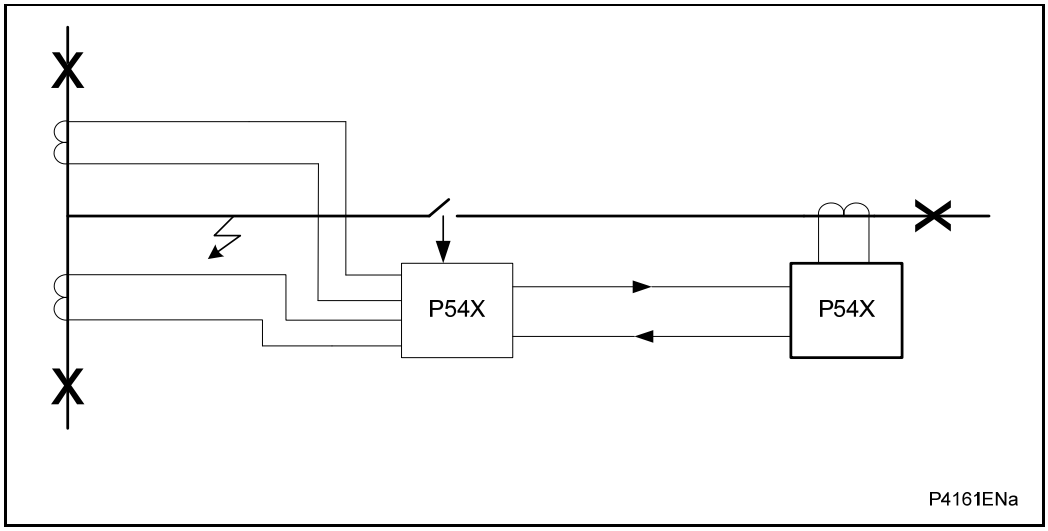

Figure 11 Stub bus protection

For an internal fault the relay will operate, tripping the two local circuit breakers. When in stub bus mode, the relay will not send a differential intertrip signal.

In P544 and P546 with 2 sets in Stub bus mode the currents from the two sets of CTs are used for differential protection.

However in P543 or P545 when in stub bus mode there is only 1 set of CT which effectively means if the current is above Is1 the relay will trip as there is no effective bias.

In stub bus mode if the communication fails then the differential protection is lost. A possible way to provide protection then would be to apply a high set overcurrent protection which can be enabled by settings when communication fails and in Stub bus mode.

1.1.8 The minimum operating current

The minimum operating current is related, but not equal to, the Is1 setting.

Consider a single end fed fault with no load but fault current, I:-

$|I_{diff}| = I$

$|I_{bias}| = ½I$

Assuming $|I_{bias}| < I_{s2}$, then, using the equations from section 1.1, the relay will operate if:-

$|I_{diff}| > k1.|I_{bias}| + I_{s1}$ or

$I > k1.½I + I_{s1}$ or

$I > I_{s1} / (1 - 0.5\ k1)$

OP

The minimum operating current is therefore a function of the Is1 and k1 settings. With k1 set to 30% and Is1 set to 0.2 pu, the minimum operating current will be:

I_{min} = 1.176 Is1

I_{min} = 0.235 pu

1.2 Disabling/enabling differential protection

The differential function can be globally enabled or disabled using the CONFIGURATION /Phase Diff/Enabled-Disabled setting.

If the differential function is disabled globally (i.e. CONFIGURATION column), no current differential message is transmitted and no current differential measurements (Measurements 3) and channel communication statistics (Measurements 4) are displayed. Therefore a remote connected relay, will display a signaling fail and C Diff failure alarm.

If the differential function is enabled globally (i.e. CONFIGURATION column) and disabled within a group (i.e. group x column), current differential message is exchanged, current differential measurements (Measurements 3) and channel communication statistics (Measurements 4) are displayed, local current differential protection cannot trip but relay can receive a differential inter-trip from the remote end.

1.3 Differential relay compatibility with previous versions

Current differential protection in P54x relays is as follows:

- P543 - P546 models suffix K are compatible with each other
- In non GPS mode P543 - P546 models suffix K are compatible with relay models P543 - P546 suffix B,G and J
- In GPS mode P543 - P546 models suffix K are compatible with relay models P545 - P546 suffix B,G and J
- P543 - P546 models suffix K are not compatible with suffix A models

If a relay suffix K is communicating with a relay suffix B,G or J, a monitor bit labeled **H/W B to J model** in Measurement 4/Channel status will become **1**

Differential current transformer supervision (Differential CTS) in P543 - P546 models suffix K are only compatible with P543 - P546 models suffix K.

1.4 Differential relay without voltage connections

Differential protection does not need phase or neutral voltage connections as this protection relies entirely on the currents measured at each end of the line.

If there are no voltage connections to the P54x relay, the **VTs Connected Yes/No** setting under **CT AND VT RATIOS** should be set to **No**. Once set to **No**, this will cause the relay VTS logic to set the VTS Slow Block and VTS Fast Block DDBs, but it will not raise any alarms. It will also override the **VTS enabled** setting should the user set it. The purpose of this is to stop the pole dead logic working incorrectly in the absence of voltage and current inputs.

1.5 Line parameters settings

1.5.1 Phase rotation (phase sequence)

A setting is used to select whether the 3 phase voltage set is rotating in the standard ABC sequence, or whether the rotation is in reverse ACB order. The appropriate selection is required to ensure that all sequence components and faulted phase flagging/targeting is correct.

1.5.2 Tripping mode - selection of single or three phase tripping

This selects whether instantaneous trips are permitted as Single pole, or will always be 3 pole. Protection elements considered as “instantaneous” are those normally set to trip with no intentional time delay, i.e.: Differential, directional earth/ground DEF aided scheme and if fitted, Zone 1 distance and distance channel aided scheme. The selection **1 and 3 pole** allows single pole tripping for single phase to ground faults. The selection **3 pole** converts all trip outputs to close Trip A, Trip B and Trip C contacts simultaneously, for three pole tripping applications.

In the case of the P544/P546, the tripping mode can be set independently for the two circuit breakers controlled.

Logic is provided to convert any double phase fault, or any evolving fault during a single pole auto-reclose cycle into a three phase trip. Two phase tripping is never permitted. This functionality is shown in Figure 12 for P543/P545 and in AR Figure 63 (logic diagram supplement) for P544/P546 models.

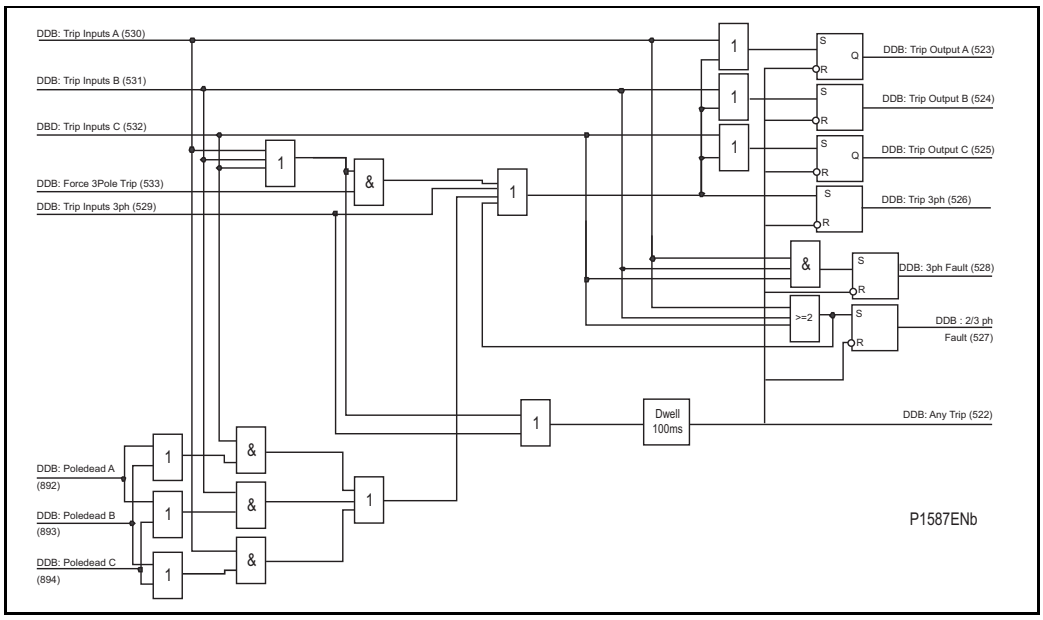

Figure 12 Trip conversion scheme logic

1.5.3 Pole dead logic

Pole dead logic is used by the relay to determine when the circuit breaker poles are open (“pole dead”). This indication may be forced, by means of status indication from CB auxiliary contacts (52a or 52b), or internally determined by the relay. When no auxiliary contacts are available, the relay uses lack of phase current (Setting: CB FAIL & I</UNDER CURRENT/I< Current Set), and an undervoltage level detector (pick up fixed at 38.1 V - drop off fixed at 43.8 V to declare a “pole dead”.

Note: If the VT is connected at the busbar side, auxiliary contacts (52a or 52b) must be connected to the relay for a correct pole dead indication. The logic diagrams, Figure 13 and Figure 14 below show the details:

OP

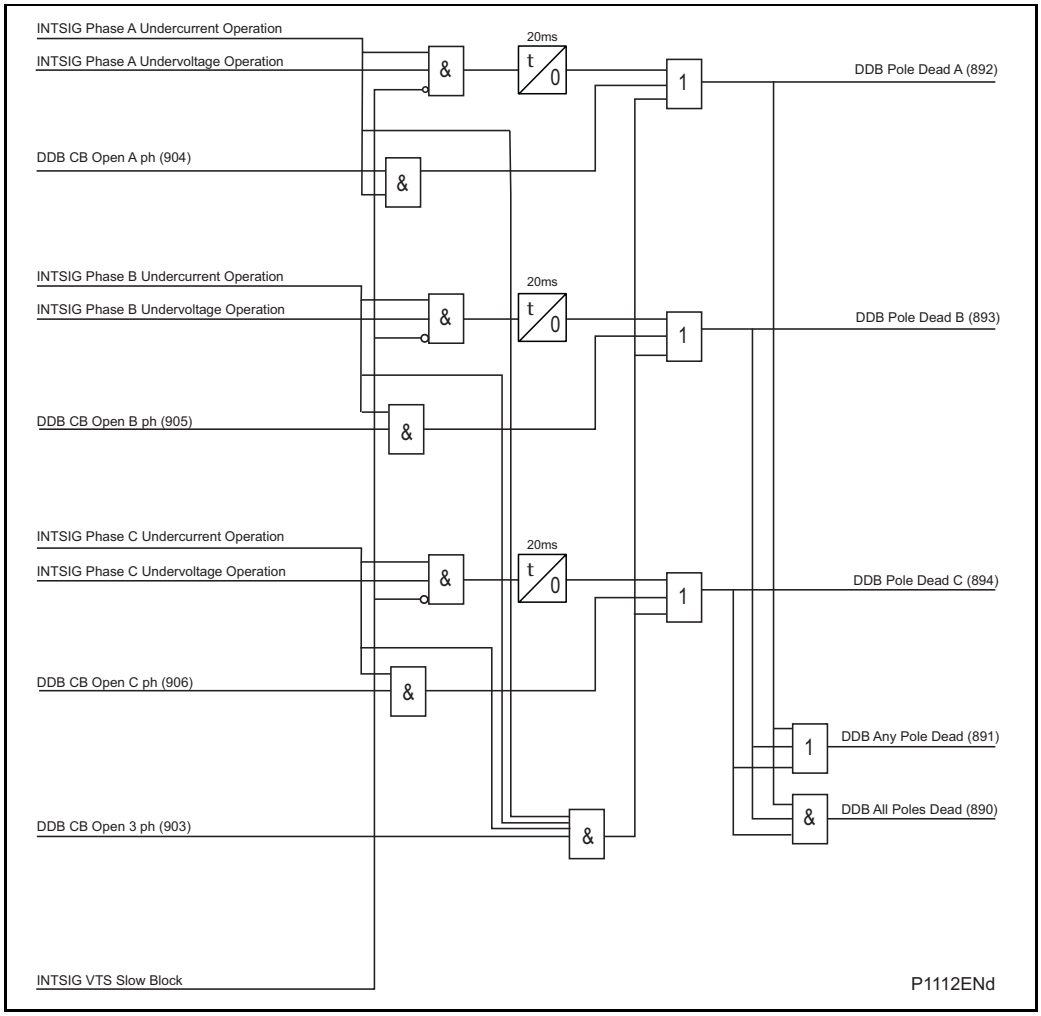

Figure 13 Pole dead logic for P543/P545

OP

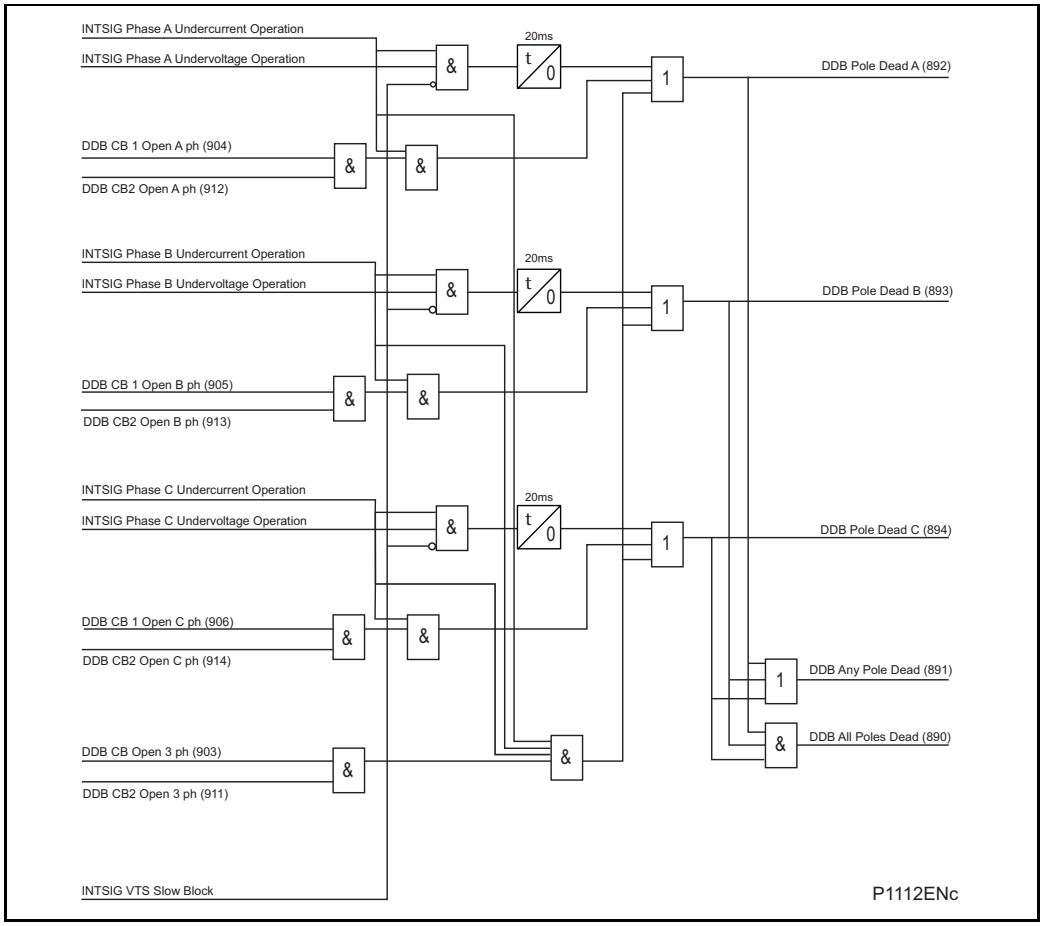

Figure 14 Pole dead logic for P544/P546

1.5.4 Residual compensation for earth/ground faults

For earth faults, residual current (derived as the vector sum of phase current inputs (Ia + Ib + Ic) is assumed to flow in the residual path of the earth loop circuit. Therefore the earth loop reach of any zone must generally be extended by a multiplication factor of (1 + kZN) compared to the positive sequence reach for the corresponding phase fault element.

Caution: The kZN Angle is different than previous LFZP, SHNB, and LFZR relays: When importing settings from these older products, subtract angle ∠ Z1.

1.5.5 Mutual compensation for parallel lines

When applied to parallel circuits mutual flux coupling can alter the impedance seen by the fault locator, and distance zones. The effect on the ground distance elements and on the fault locator of the zero sequence mutual coupling can be eliminated by using the mutual compensation feature provided. This requires that the residual current on the parallel line is measured, as shown in the connection diagram. It is extremely important that the polarity of connection for the mutual CT input is correct.

The major disadvantage of standard mutual compensation is that faults on a parallel line can cause misoperation of the healthy line protection. The P54x uses fast dynamic control of the mutual compensation, which prevents such misoperations of the healthy line protection, while providing correct mutual compensation for faults inside the protected section. The dynamic control is achieved by effectively eliminating the mutual compensation above a set level of parallel line residual current (I MUTUAL) compared to the protected line residual current (IN).

OP

- If the ratio: I MUTUAL/IN is less than the *'Mutual Cutoff'* setting, then full mutual compensation is applied to all distance zones, and the fault locator.
- If the ratio: I MUTUAL/IN is greater than the *'Mutual Cutoff'* setting, then no mutual compensation is applied.

1.6 Optional distance protection

The MiCOM P54x has, by ordering option, a comprehensive integrated distance protection package. This comprises :-

- Phase fault distance protection
- Earth/ground fault distance protection
- Power sing detection, alarm, and blocking
- Out-of-step detection and tripping
- Switch on to fault (SOTF) and trip on reclose (TOR)
- Directional Schemes
- Aided schemes

OP

These are described in the following sections and are marked as being applicable to the distance option only. If the distance option is not specified, these will not be applicable, and additional protection will be in the form of overcurrent etc., as described from section **Error! Reference source not found.**

1.7 Phase fault distance protection (Distance option only)

The MiCOM P54x has 5 zones of phase fault protection. It is possible to set all zones either with quadrilateral (polygon) characteristics, or with mho circles. Each zone can be set independently to be permanently disabled, permanently enabled or enabled in case of protection communication channel fail. The impedance plot Figure 15 shows the characteristic when set for mho operation. The characteristic drawn for illustration is based on the default distance settings without dynamic expansion.

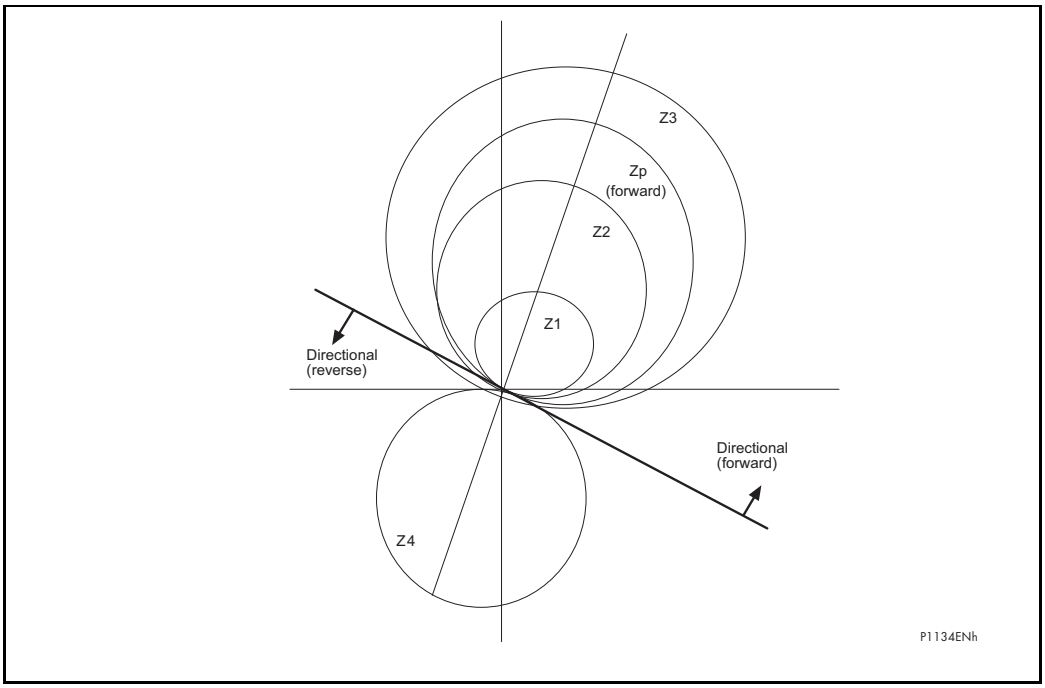

Figure 15 Phase fault Mho characteristics (Distance option only)

The protection elements are directionalized as follows:

- Zones 1, 2 and 3 - Directional forward zones, as used in conventional three zone distance schemes. Note that Zone 1 can be extended to Zone 1X when required in zone 1 extension schemes.
- Zone P - Programmable directionality. Selectable as a directional forward or reverse zone.
- Zone 4 - Directional reverse zone.

1.8 Earth fault distance protection (Distance option only)

The MiCOM P54x has 5 zones of earth (ground) fault protection. It is also possible to set all zones either with quadrilateral characteristics, or with mho circles. The choice of mho or quadrilateral is independent of the general characteristic selection for the phase fault elements. Each zone can be set independently to be permanently disabled, permanently enabled or enabled in case of protection communication channel fail.

All earth fault distance elements are directionalized as per the phase fault elements, and use residual compensation of the corresponding phase fault reach. The impedance plot Figure 16 adds the characteristics when set for quadrilateral operation.

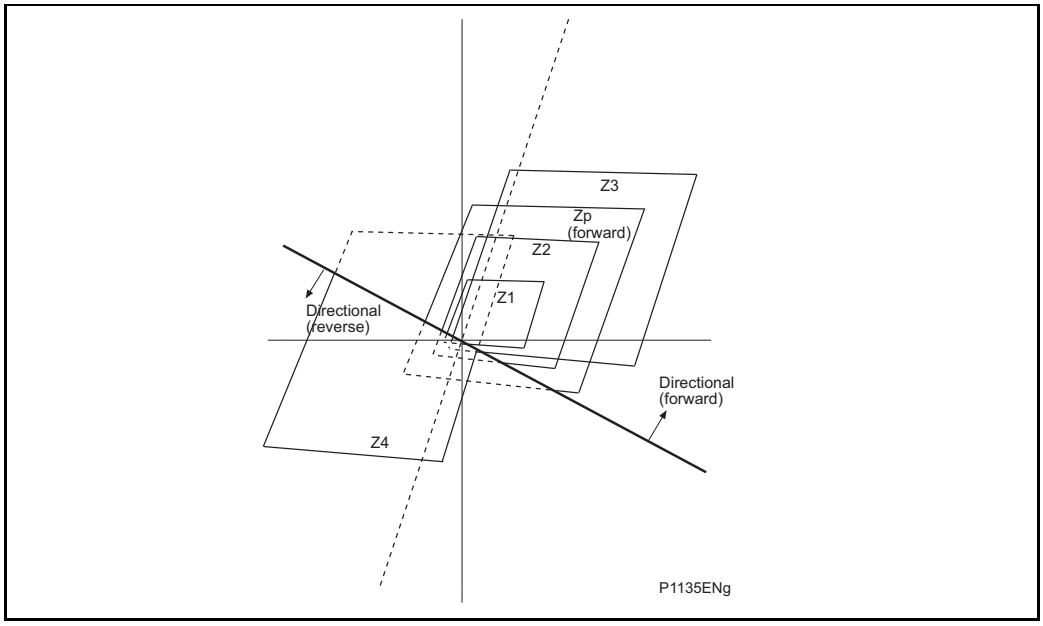

Figure 16 Earth fault quadrilateral characteristics (Distance option only)

1.9 Distance protection tripping decision (Distance option only)

For the MiCOM P54x, five conditions would generally need to be satisfied in order for a correct relay trip to result. These are:

- The phase selector needs to identify the faulted phases, and ensure that only the correct distance measuring zones may proceed to issue a trip. Possible phase selections are AN, BN, CN, AB, BC, CA, ABC. For double phase to ground faults, the selection is AB, BC or CA, with N (neutral) just for indication only.
- The loop current for the selected phase-ground or phase-phase loop must exceed the minimum sensitivity for the tripping zone. By default, this sensitivity is 5%In for ground faults, and both of the faulted phases must exceed 5%In for phase-phase faults. The user may raise this minimum sensitivity if required, but this is not normally done.

OP

- The faulted phase impedance must appear within a tripping (measuring) zone, corresponding to the phase selection. Five independent zones of protection are provided. The tripping zones are mho circles or quadrilateral, and selected independently for phase, and ground faults. The ground fault distance elements require compensation for the return impedance, this residual compensation modifies the replica impedance for each zone. Under conditions were a parallel line is present the relay can compensate for the mutual coupling between the lines; this adjusts the replica impedance in the same way as the residual compensated based on the current in the parallel line. The reach setting Z for ground fault mho and quadrilateral elements is determined as follows:

$$Z = Z_1 + [(I_{res} / I_P) \times Z_{res}] + [(I_{mut} / I_P) \times Z_{mut}]$$

Where:

Z_1 is the positive sequence reach setting

I_P is the current in the faulted phase

I_{res} is the residual current (= $I_a + I_b + I_c$)

Z_{res} is the residual impedance (= $(Z_0-Z_1)/3$) = $K_{res} \times Z_1$

I_{mut} is the residual current in the parallel line

Z_{mut} is the mutual compensating impedance

OP

- For directional zones within the relay (Zone 1, P, 2, 4 and Z3 if set directional), the delta directional line must be in agreement with the tripping zone. For example, zone 1 is a forward directional zone, and must not trip for reverse faults behind the relay location. A zone 1 trip will only be permitted if the directional line issues a “forward” decision. The converse will be true for zone 4, which is reverse-looking and this needs a reverse decision by the directional line. If the delta directional cannot make a decision then conventional direction lines are used.

- The set time delay for the measuring zone must expire, with the fault impedance measured inside the zone characteristic for the duration. In general, Zone 1 has no time delay (“instantaneous”), all other zones have time delays. Where channel-aided distance schemes are used, the time delay tZ2 for overreaching Zone 2 may be bypassed under certain conditions.

In order to achieve fast, sub-cycle operation, the phase selection, measuring zones and directional line algorithms run in parallel, with their outputs gated in an AND configuration. This avoids sequential measurement which would slow the operation of the relay.

1.10 Phase selection (Distance option only)

Phase selection is the means by which the relay is able to identify exactly which phase are involved in the fault and allow the correct measuring zones to trip.

Operation of the distance elements, is controlled by the Superimposed Current Phase Selector. Only elements associated with the fault type selected by the phase selector are allowed to operate during a period of two cycles following the phase selection. If no such element operates, all elements are enabled for the following 5 cycles, before the phase selector returns to its quiescent state.

Operation of an enabled distance element, during the two cycle or 5 cycle period, causes the phase selector state to be maintained until the element resets. The one exception to this is when the phase selector decision changes while an element is operated. In this case, the selected elements are reset and the two cycle period re-starts with the new selection.

Note: Any existing trip decision is not reset under this condition. After the first cycle following a selection, the phase selector is only permitted to change to a selection involving additional phases.

On double phase to ground faults, only the appropriate phase-phase elements are enabled. The indication of the involvement of ground is by operation of a biased neutral current level detector.

1.10.1 Theory of operation

Selection of the faulted phase(s) is performed by comparing the magnitudes of the three phase-to-phase superimposed currents. A single phase-to-ground fault produces the same superimposed current on two of these signals and zero on the third. A phase-to-phase or double phase-to-ground fault produces one signal which is larger than the other two. A three phase fault produces three superimposed currents which are the same size. Reference is made to Figure 17 to show how the change in current can be used to select the faulted phases for a CN fault.

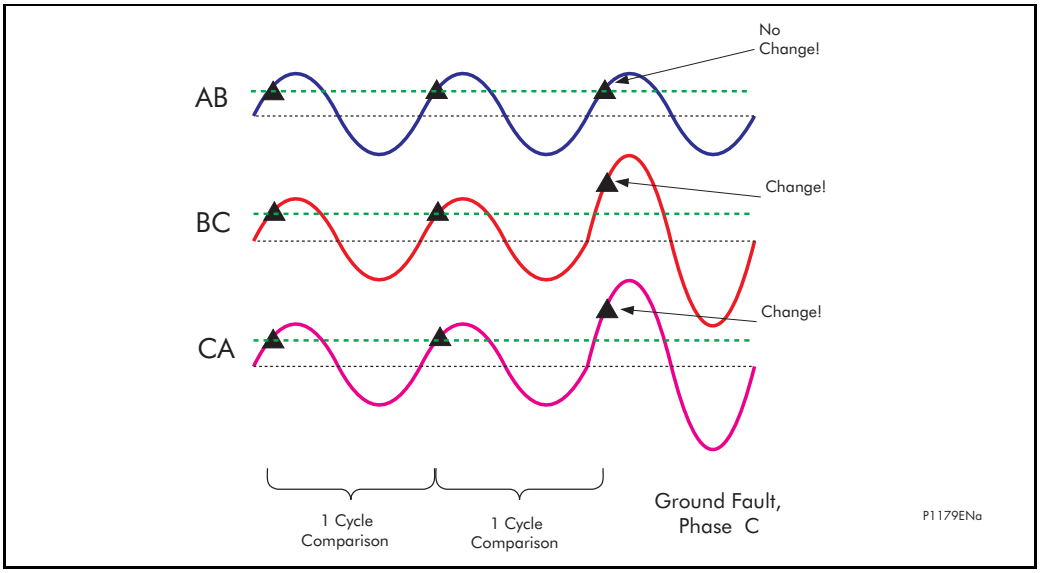

Figure 17 Phase to phase currents showing change for CN fault

A superimposed current is deemed to be large enough to be included in the selection if it is greater than 80% of the largest superimposed current.

A controlled decay of the superimposed threshold ensures that the phase selector resets correctly on fault clearance.

Phase selection can only be made when any superimposed current exceeds 4% of nominal current (In) as a default value.

Under normal power system conditions, the superimposed currents are made by subtracting the phase-phase current sample taken 96 samples (2 cycles) earlier from the present sample.

When a fault is detected, resulting in a phase selection being made, the “previous” memorized sample used in the superimposed current calculation is taken from a re-cycled buffer of “previous” samples. This ensures that, if the fault develops to include other phases, the original selection is not lost. The re-cycling of the prefault buffers is continued until the phase selector resets, either because the fault is cleared or when the 5 cycle period has expired and no element has operated.

Under conditions on load with high levels of sub-synchronous frequencies, it is necessary to increase the ΔI phase selector threshold from its default (4% In) to prevent sporadic operation. This is automatically performed by the relay, which will self-adjust the threshold to prevent operation upon the noise signals, whilst still maintaining a high sensitivity to faults.

In order to facilitate testing of the Distance elements using test sets which do not provide a dynamic model to generate true fault delta conditions, a Static Test Mode setting is provided. This setting is found in the COMMISSIONING TESTS menu column. When set, this disables phase selector control and forces the relay to use a conventional (non-delta) directional line.

1.11 Mho element polarization and expansion (Distance option only)

To ensure coverage for close-up faults, distance protection always includes a proportion of voltage memory. Therefore when each zone characteristic is determined, the phase comparator used in the zone decision will use a mix of vectors “V” (the directly measured phase/line voltage), “IZ” (a voltage constructed from the fault current and zone impedance reach setting) and “Vpol” (a polarizing voltage). The MiCOM P54x allows the user to specify the composition of Vpol, deciding on how to mix the proportion of two voltage selections:

The amount of directly measured (“self”) polarizing in the mix;

The amount of clean memory stored from before the fault inception.

OP

One of the additional benefits in adding memory into the polarizing mix is that mho characteristics will offer dynamic expansion in the event of a forward fault. This phenomenon is shown in Figure 18 for the default setting Vpol=1, where a Zone 1 characteristic with reach Z will grow to cover 50% of Zs to cover more fault arc resistance.

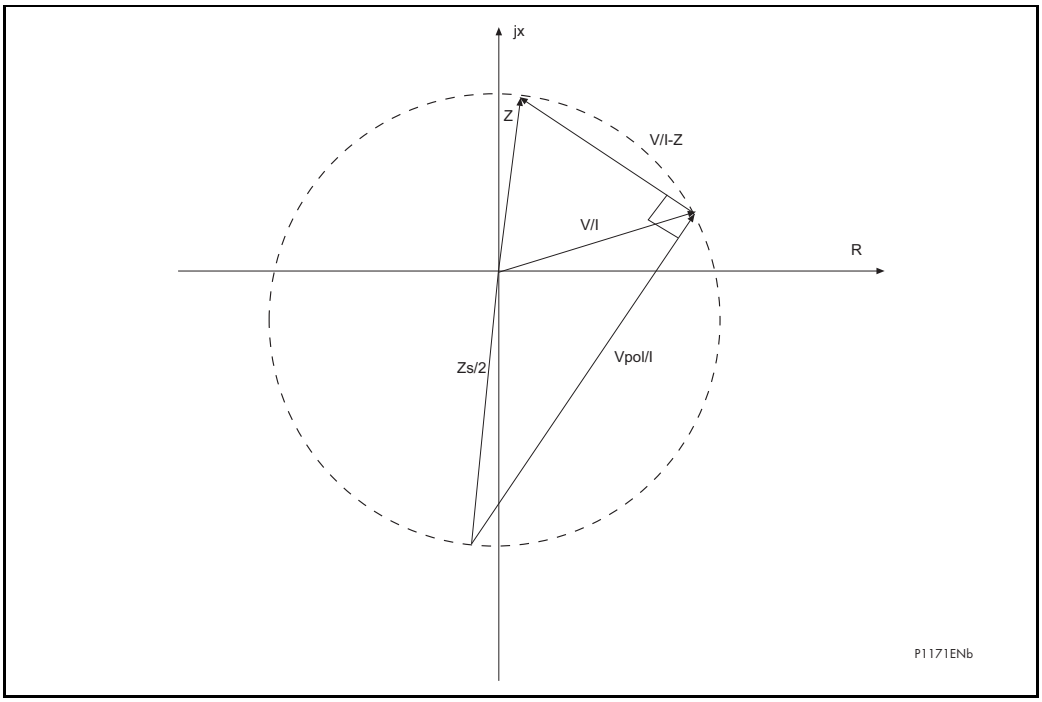

Figure 18 Expansion of zone 1 for the default polarizing setting Vpol=1 (Distance option only)

Key: Zs = Source impedance behind the relay location

The MiCOM P54x does not allow the polarizing to be selected as entirely self polarized, or entirely memory polarized. Vpol always contains the directly measured self-polarized voltage, onto which a percentage of the pre-fault memory voltage can be added. The percentage memory addition is settable within the range 0.2 (20%) to 5 (500%).

Setting 20% means that the majority of the polarizing will be self-polarizing, with minimal mho circle expansion, and just enough memory to counteract any CVT transients. Setting 500% means that in the overall polarizing mix the ratio would be 1 part self polarizing to 5 parts memory. Such a high memory content would offer large dynamic expansion, covering 83% of the source impedance (Zs) behind the relay.

- Mho expansion = [(Polarizing Setting)/(Setting + 1)] . Zs

This characteristic is used for Zones 1, P (optionally reversed), 2, 4 and Zone 3 if the offset is disabled.

The characteristic is generated by a phase comparison between V/I-Z and the polarizing signal Vpol

Where:

V is the fault voltage

Vpol is a user selected mix of the fault voltage and prefault memory

I is the fault current

Z is the zone reach setting (including residual compensation for ground fault elements)

Zs is the source impedance (included in Figure 18 to show the position of the Vpol phasor)

The polarizing signal Vpol is a combination of the fault voltage and the stored vector taken from 2 cycles before the fault, which is a representation of the volts at the source.

$$Vpol = IZs + V$$

or

$$Vpol/I = Zs + V/I$$

Operation occurs when the angle between the signals is greater than 90°, which is for faults inside the circle.

The validity of the voltage memory in MiCOM P54x extends to 16 cycles after loss of the VT input voltage. If no memory is available, the polarizing signal is substituted by cross polarizing from the unfaulted phase(s). For example if Vamem is unavailable, the voltages measured on phases B and C now are used, phase-shifted as necessary.

To produce the reversed zones (Zone 4 and, optionally, Zone P), the impedance Z is automatically set to a negative value.

1.11.1 Switch on to fault action for zone 1 (Distance option only)

Operation of the distance elements is generally prevented if the polarizing signal magnitude is insufficient (less than 1V). The exception is for Zone 1, which following breaker closure is allowed to operate with a small (10%) reverse offset. This is to ensure operation when closing on to a close-up three phase fault (Scenario: earthing/ground clamps inadvertently left in position).

In addition Z4 reverse operation is held if it operates in memory.

Other zones may have their zone time delays bypassed for SOTF/TOR, as detailed in the application notes.

1.11.2 Offset Mho (Distance option only)

If the Zone 3 offset is enabled then it uses no memory polarizing and has a fixed reverse offset from the origin of a distance polar diagram. Characteristic angle and residual compensation are as per the forward settings.

1.12 Quadrilateral elements (Distance option only)

The quadrilateral elements are made from combinations of reactance lines, directional lines and load blinders.

A counter, similar to that used for the mho element, is incremented when all the relevant phase comparisons indicate operation. A fast up-count of 6 is issued when the fault is within 80% of the reach of the zone, and well within the resistive reach boundary. Elsewhere, the increment is always 1 but a fast decrement (6) is used when the faulted phase current is less than half the minimum operating current setting. Therefore, an area of fast operation for faults near the characteristic angle is always available, whether mho or quadrilateral characteristics are applied.

1.12.1 Directional quadrilateral (Distance option only)

This characteristic is used for Zones 1, P (optionally reversed), 2 and 4 (reversed).

OP

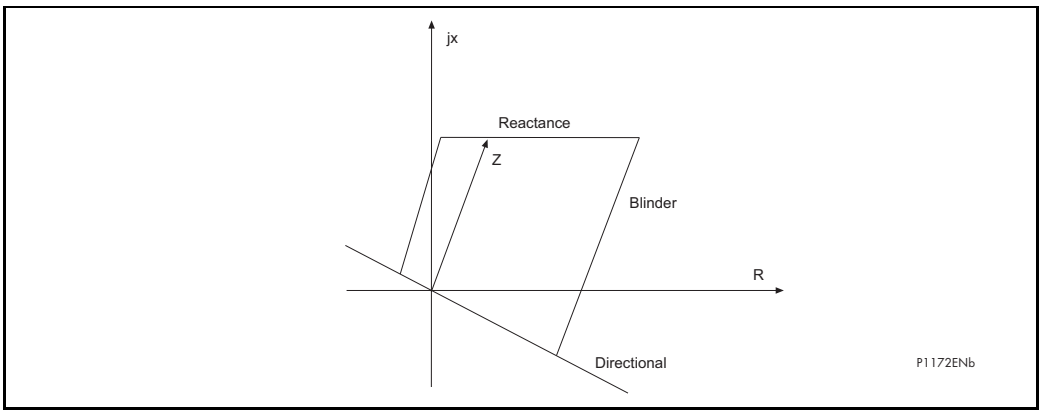

Figure 19 Quadrilateral characteristics (directional line shown simplified) (Distance option only)

It is formed from two parallel reactance lines, two parallel resistive reach blinders and controlled by the delta or conventional directional line. The bottom reactance line (not shown on Figure 19) and the left hand reach blinder are automatically set to 25% of the reactance reach and the right hand blinder, respectively. The reactance line is arranged to operate for faults below the line, the blinders for faults within the resistive reach limits, and the delta directional line for forward faults. The counter increments when all of these conditions are satisfied.

1.12.2 Offset quadrilateral (Distance option only)

This characteristic is used for Zone 3 when the offset is enabled.

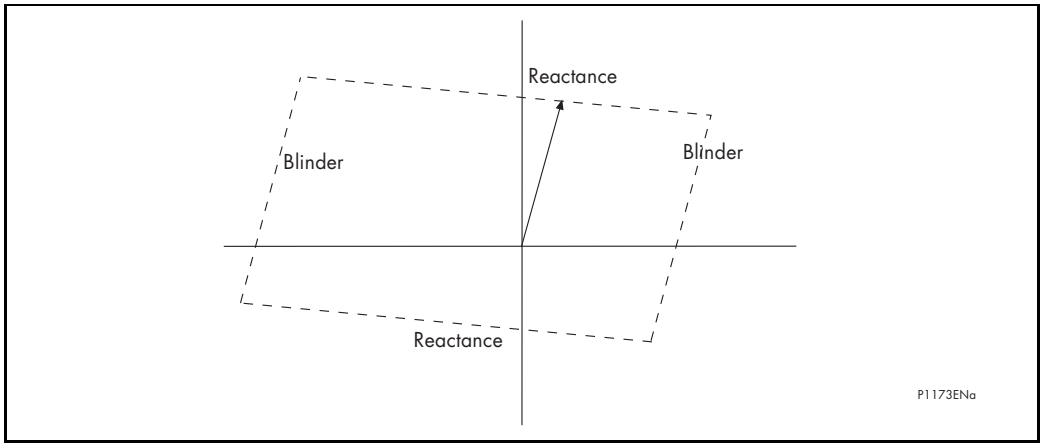

Figure 20 Offset quadrilateral for zone 3 (Distance option only)

It is formed from two reactance lines and two resistive reach blinders. The upper reactance line is arranged to operate for faults below it and the lower for fault above it. The right hand blinder is arranged to operate for faults to its left and the left hand blinder for faults to its right. The counter increments when all these conditions are satisfied.

OP

Note: When Zone 3 is set offset in simple setting mode, the left hand blinder and lower reactance line equal the offset percentage setting of the line impedance and fault resistance respectively. In the advanced setting mode, both lines can be set independently.

1.12.3 Reactance line - top line of quadrilateral (Distance option only)

The MiCOM P54x provides a flexible user settable top reactance line tilting mode:

1. Dynamic (self adaptive) tilt angle - applicable to ground distance only
2. Fixed tilt angle - applicable to phase distance and ground distance if Dynamic tilting is disabled

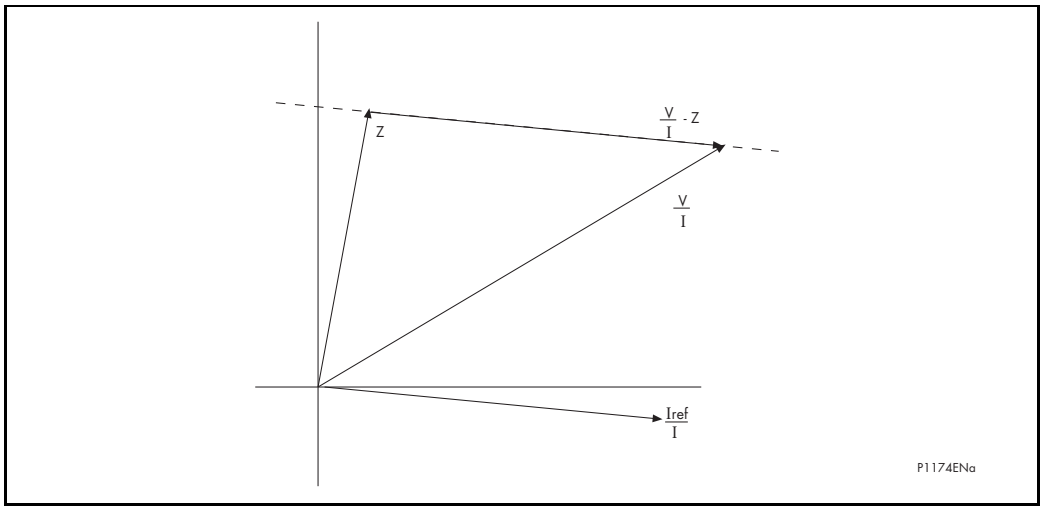

Figure 21 Reactance line - top line of quadrilateral (Distance option only)

A reactance line is formed by the phase comparison between an operating signal V/I - Z, which is the same as that used for the equivalent mho element, and a polarizing signal Iref/I.

Where:

V is the fault voltage

I is the fault current (always presented at zero degree)

Z is the zone reach setting, including residual compensation

Iref is the negative sequence current for dynamic tilting or phase current for the fixed angle tilting that includes the initial tilt angle setting (set to -3° as default).

Dynamic tilting:

When the Dynamic tilting is selected by a user, the top line of the ground distance quadrilateral characteristic will start tilting from the user settable angle (default angle is -3°) and tilt further for the angle difference between the fault current and the negative sequence current so that an overall tilt angle with the reference to fault (phase) current 'I' will be:

$$\text{Tilt angle} = \angle Iref/I = \text{setting} + \angle(Iph - I2)$$

Operation occurs when the operating signal lags the polarizing signal.

The default starting (initial) tilt angle of -3° is introduced to reduce the possibility of overreach caused by any small differences between the negative sequence source impedances, and general CT/VT angle tolerances.

OP

Negative sequence current is used for ground fault Iref since it provides a better estimate of the current in the fault than either the faulted phase current or zero sequence current. As a result the reactance line follows the fault resistance impedance and tilts up or down (depending on the load direction) starting from the set initial tilt angle to avoid underreach or overreach.

The following additional constraints also exist to ensure that the top line does not tilt too far:-

- The Zone 1 reactance (top) line can only stay at set initial tilt angle (-3° default) compared to the resistive axis, or can tilt down by ∠(Iph-I2) . The top line may never tilt up from set tilting angle, to ensure that Zone 1 does not overreach. This maintains grading/selectivity with downstream protection.
- The Zone 2 reactance (top) line can only ever stay at set tilt angle (-3° default) compared to the resistive axis, or can tilt up by ∠(Iph-I2). The top line may never tilt down, to ensure that Zone 2 does not underreach. This is particularly important when Zone 2 is used to key channel-aided distance schemes.
- The maximum permissible tilt is +/- 45° either side of the set initial tilt angle (-3° default)

When one circuit breaker pole is open, during a single pole reclose sequence, the polarizing signal is replaced by the fault current with a -7° phase shift, allowing the protection of the remaining phases, even though the negative sequence current is not available. The additional phase shift is provided to reduce the possibility of overreach caused by the faulted phase as the reference.

Predetermined (fixed angle) tilting:

For the phase quadrilateral characteristics and ground quad characteristics in case when Dynamic tilting is disabled, the fix angle setting settable by a user applies. Each zone has an independent tilt angle setting. The total tilting angle with the reference to fault current 'I' is equal to the set angle:

$$\text{Tilt angle} = \angle Iref/I = \text{setting}$$

Note: A minus angle is used to set a downwards tilt gradient, and a positive angle to tilt upwards.

Operation occurs when the operating signal lags the polarizing signal. The setting range is +/- 30°.

1.12.4 Right hand resistive reach line (Distance option only)

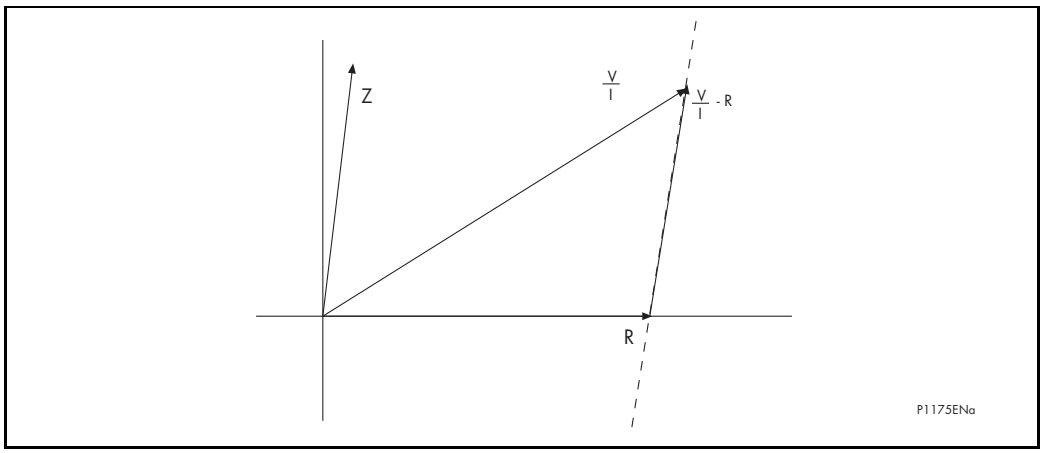

Figure 22 Resistive reach line (load blinder) (Distance option only)

A load blinder is formed by the phase comparison between an operating signal V/I - R and a polarizing signal Z

Where:

V is the fault voltage

I is the fault current

R is the resistive reach of the blinder

Z zone reach setting (including neutral compensation for ground distance)

Operation occurs when the operating signal leads the polarizing signal.

OP

1.13 Quadrilateral phase resistive reaches (Distance option only)

The resistive reach setting is used to select the resistive intercept of the quadrilaterals – the right-hand side of the zone. Note that the RPh setting applied defines the fault arc resistance that can be detected for a phase-phase fault. For such a fault, half of the fault resistance appears in the positive sequence network, and half in the negative sequence network. Therefore, as most injection test sets will plot impedance characteristics in positive sequence terms, the right-hand intercept will be found at half the setting applied (= Rph/2).

1.14 Quadrilateral ground resistive reaches (Distance option only)

The resistive reach setting is used to select the resistive intercept of the quadrilaterals – the right-hand side of the zone. Note that the RG setting applied defines the fault arc resistance that can be detected for a single phase-ground fault. For such a fault, the fault resistance appears in the out and return total fault loop, in which the line impedance is Z1 x (1 + kZN). Therefore, as most injection test sets will plot impedance characteristics in positive sequence terms, the right-hand intercept will be found at less than setting applied (= RG/[1+kZN]).

1.15 Advanced distance elements zone settings (Distance option only)

For most applications the user will configure the relay in “Simple” setting mode, whereby all zone reaches are based on the protected line impedance, scaled by a reach percentage. In such a case there is then no need to set the individual zone ohmic reaches and compensation factors, because the automatic calculation will already have determined these settings. Therefore with Simple settings, the menu column **GROUP x DISTANCE ELEMENTS** will merely be a list of what settings have been automatically calculated and applied. This list is useful as a reference when commissioning and periodic injection testing.

Using the **Advanced** setting mode, the user has decided to set all the zones him/herself, and must complete all the reach and residual/mutual compensation settings on a per zone basis.

Note: Distance zones are directionalized (where applicable) by a delta directional decision. The characteristic angle for this decision is set along with the Delta Directional configuration, in the **GROUP x DISTANCE SETUP** menu column. The default setting is 60°.

1.15.1 Phase fault zone settings (Distance option only)

Each zone has two additional settings that are not accessible in the Simple set mode. These settings are:

- A tilt angle on the top line of any quadrilateral set for phase faults;
- A minimum current sensitivity setting.

By factory defaults, the Top Line of quadrilateral characteristics is not fixed as a horizontal reactance line. To account for phase angle tolerances in the line CT, VT and relay itself, the line is tilted downwards, at a “droop” of -3°. This tilt down helps to prevent zone 1 overreach.

In **Advanced** setting mode, the Top line tilt is settable.

The current *Sensitivity* setting for each zone is used to set the minimum current that must be flowing in each of the faulted phases before a trip can occur. If for example a phase A-B line fault is present, the relay must measure both currents Ia and Ib above the minimum set sensitivity. The default setting is 7.5% In for Zones 1 and 2, 5% In for other zones, ensuring that distance element operation is not constrained, right through to an SIR ratio of 60.

1.15.2 Ground fault zone settings (Distance option only)

It should be noted that the Ground reach settings (Reach and Angle) are set according to the **positive sequence line impedance**, and so will generally be identical to the Phase reach settings.

The Top Line of ground quadrilateral characteristics is not fixed as a horizontal reactance line. To account for phase angle tolerances in the line CT, VT and relay itself, the line is tilted downwards, at a “droop” of -3°. This tilt down helps to prevent zone 1 overreach. However, to further improve performance this line incorporates an additional dynamic tilt, which will change according to the phase angle between the faulted phase current and the negative sequence current:

- Zone 1 is allowed to tilt down to avoid overreaching for prefault power export;
- Zones 2 and 3 are allowed to tilt up to avoid underreaching for prefault power import.

As the tilt is dynamic, this is why ground fault elements do not have a setting for the angle.

The current *Sensitivity* setting for each zone is used to set the minimum current that must be flowing in the faulted phase <u>and the neutral</u> before a trip can occur. If for example an A-ground fault is present, the relay must measure both currents Ia and Iresidual above the minimum set sensitivity.

The default setting is 7.5% In for Zones 1 and 2, 5% In for other zones, ensuring that distance element operation is not constrained, right through to an SIR ratio of 60.

1.15.3 Distance zone sensitivities (Distance option only)

When the **Simple** setting mode is selected, the minimum current sensitivity still applies, but the value is automatically calculated and applied based on the data entered into the simple settings fields. The criteria used to calculate the setting value is required to satisfy a minimum value of current flowing in the faulted loop and a requirement on the Zone reach point voltage. For Zones 3, P, and 4, the requirements are that the minimum current must be greater than 5% of rated current, and that the minimum voltage at the Zone reach point is 0.25 V. The current equating to the reach point criteria can be expressed as 0.25/Zone reach, and the sensitivity can be expressed as:-

Sensitivity (Z3, ZP, Z4) = max (5%In, (0.25/Zone reach))

For Zones 1 and 2, the sensitivity is further qualified to ensure that they are set less sensitive that the reverse Zone 4. This is designed to ensure stability of the relay where applied with either an overreaching, or a blocking scheme. For Zones 1 and 2, the same criteria as for Zones 3, P, and 4 are applied, but in addition a minimum sensitivity criterion dependent upon the Zone 4 sensitivity is applied : the sensitivity must also exceed 1.5 x Zone 4 sensitivity. The sensitivity can be expressed as:-

Sensitivity (Z1, Z2) = max (5%In, (0.25/Zone reach), (1.5 x Zone 4 sensitivity))

Or

Sensitivity (Z1, Z2) = max (5%In, (0.25/Zone reach), (1.5 x (0.25/Zone 4 reach)))

OP

Note 1: The dependency on the Zone 4 element always applies, even if Zone 4 is disabled.

Note 2: The default reach setting for Zones 1, 2, and 4 are 80%, 120%, and 150% respectively and for these settings, the “Zone dependent” terms can be reduced to:-

0.25/Zone 1 reach = 0.25/(0.8 x line impedance)

0.25/Zone 2 reach = 0.25/(1.2 x line impedance)

1.5 x (0.25/Zone 4 reach) = 0.25/line impedance

In such cases, for Zone 1, the dominant Zone reach term will be that of Zone 1 and the equation can be reduced to:-

Sensitivity (Z1) = max (5%In, (0.25/(0.8 x line impedance)))

And it can be shown that for lines with an impedance less than 6.25 Ω the Zone 1 reach term will dominate and the sensitivity will be greater than 5% In. Above this line impedance the sensitivity will be 5% In.

Similarly, for Zone 2, the dominant Zone reach term will be that of Zone 4 and the equation can be reduced to:-

Sensitivity (Z2) = max (5%In, (0.25/line impedance))

And it can be seen that for lines with an impedance less than 5 Ω the Zone reach term will dominate and the sensitivity will be greater than 5% In. Above this line impedance the sensitivity will be 5% In.

In **Advanced** mode the same restrictions as minimum sensitivity should be applied to ensure distance element accuracy.

1.16 Conventional voltage transformer and capacitor VT applications (Distance option only)

The MiCOM P54x achieves fast trip times due an optimized counting strategy. For faults on angle and up to 80% of the set reach of the zone, a counter increments quickly to reach the level at which a trip is issued. Near the characteristic boundary, the count increments slower to avoid transient overreach, and to ensure boundary accuracy. This strategy is entirely sufficient where conventional wound voltage transformers are used. Therefore, where capacitor-coupled voltage transformers (CVT) are not employed, the setting **CVT Filters** can be set to Disabled.

Where capacitor-coupled voltage transformers are employed, then for a close-up fault the transient component can be very large in relation to the fundamental component of fault voltage. The relay has setting options available to allow additional filtering to be switched-in when required, and the filter options to use depend on the likely severity of the CVT transient. The two filtering methods are explained below.

1.16.1 CVTs with passive suppression of ferroresonance (Distance option only)

Passive suppression employs an anti-resonance design, and the resulting transient/distortion is fairly small. Sometimes such suppression is classed as a **type 2** CVT. In passive CVT applications, the affect on characteristic accuracy is generally negligible for source to line impedance ratios of less than 30 (SIR < 30). However, at high SIRs it is advisable to use the slower count strategy. This is achieved by setting **CVT Filters** to **Passive**.

OP

It is important to note that by enabling this filter, the relay will not be slowed unless the SIR is above that set. If the line terminal has an SIR below the setting, the relay can still trip subcycle. It is only if the SIR is estimated higher than the setting that the instantaneous operating time will be increased by about a quarter of a power frequency cycle. The relay estimates the SIR as the ratio of nominal rated voltage Vn to the size of the comparator vector IZ (in volts):

SIR = Vn/IZ

Where:

Vn = Nominal phase to neutral voltage

I = Fault current

Z = Reach setting for the zone concerned

Therefore for slower counting **I** would need to be low, as restricted by a relatively weak infeed, and **Z** would need to be small as per a short line.

1.16.2 CVTs with active suppression of ferroresonance (Distance option only)

Active suppression employs a tuned L-C circuit within the CVT. The damping of transients is not as efficient as for the passive designs, and such suppression is often termed as being a **type 1** CVT. In active CVT applications, to ensure reach point accuracy the setting **CVT Filters** is set to **Active**. The relay then varies the count strategy according to the calculated SIR (= Vn / IZ). Subcycle tripping is maintained for lower SIRs, up to a ratio of 2, with the instantaneous operating time increasing by about a quarter of a power frequency cycle at higher SIRs.

Transients caused by voltage dips, however severe, will not have an impact on the relay's directional measurement as the MiCOM P54x uses voltage memory.

1.17 Load blinding (load avoidance) (Distance option only)

Load blinders are provided for both phase and ground fault distance elements, to prevent misoperation (mal-tripping) for heavy load flow. The purpose is to configure a blinder envelope which surrounds the expected worst case load limits, and to block tripping for any impedance measured within the blinded region. Only a fault impedance which is outside of the load area will be allowed to cause a trip. The blinder characteristics are shown in Figure 23.

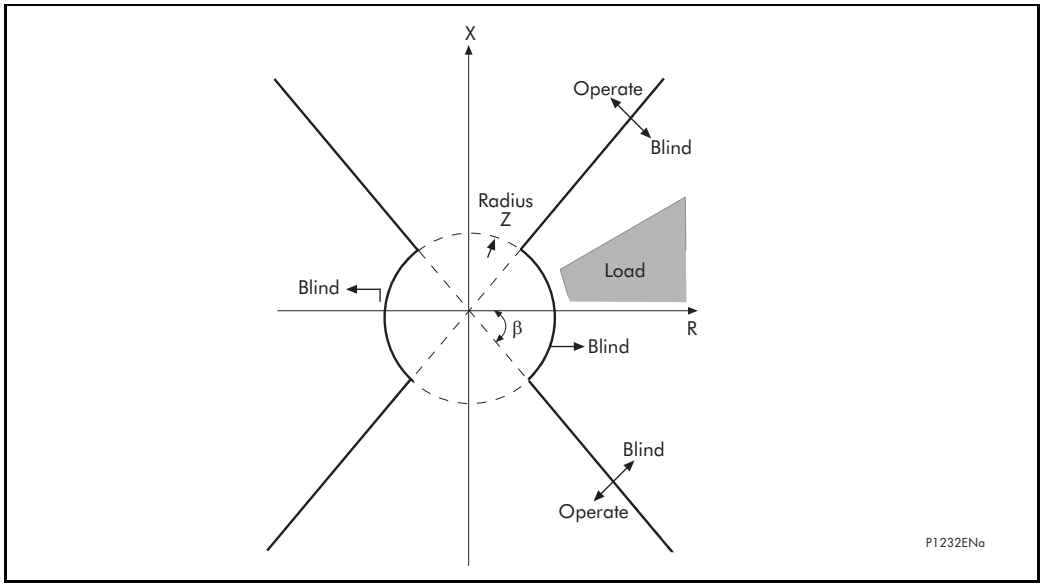

Figure 23 Load blinder characteristics (Distance option only)

In Figure 23:

- Z denotes the Load/B Impedance setting. This sets the radius of the underimpedance circle.
- β denotes the Load/B Angle setting. This sets the angle of the two blinder boundary lines - the gradient of the rise or fall with respect to the resistive axis.

The MiCOM P54x has a facility to allow the load blinder to be bypassed any time the measured voltage for the phase in question falls below an undervoltage V< setting. Under such circumstances, the low voltage could not be explained by normal voltage excursion tolerances on-load. A fault is definitely present on the phase in question, and it is acceptable to override the blinder action and allow the distance zones to trip according to the entire zone shape. The benefit is that the resistive coverage for faults near to the relay location can be higher.

1.18 Distance elements basic scheme setting (Distance option only)

Configuration of which zones will trip, and the zone time delays is set in the menu column **GROUP x SCHEME LOGIC** (where **x** is the setting group). Phase and ground elements may have different time delays if required. Operation of distance zones according to their set time delays is termed the **Basic Scheme**, and is shown in Figure 24. The basic scheme always runs, regardless of any channel-aided acceleration schemes which may be enabled (see later).

OP

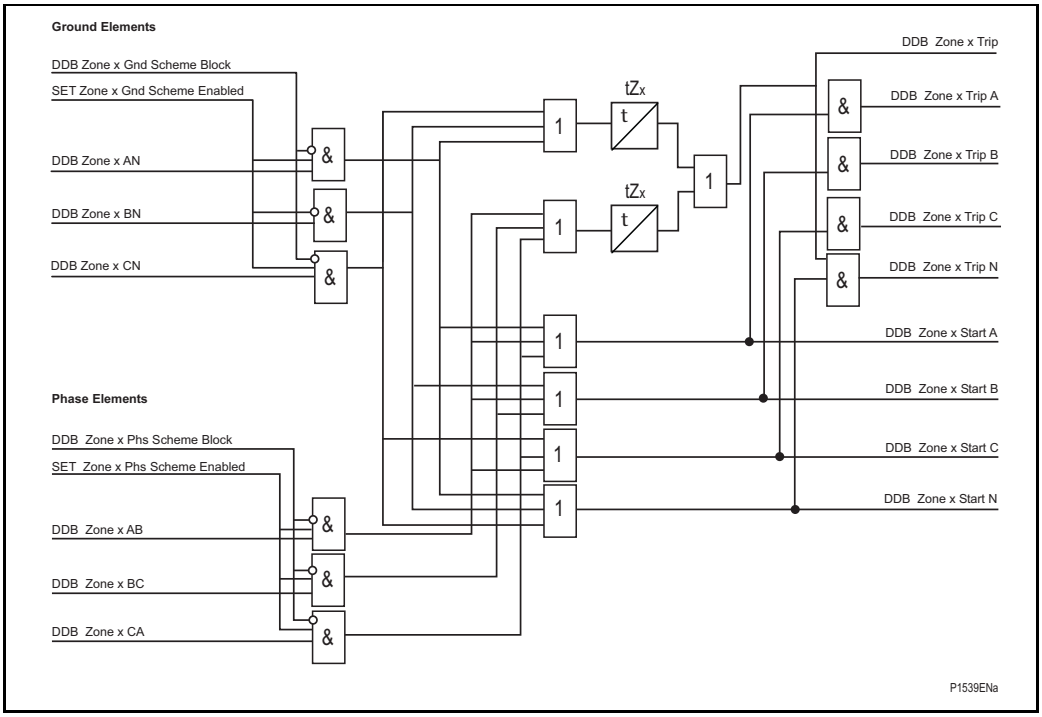

OP

Signal	Zone 1	Zone 2	Zone 3	Zone P	Zone 4
Zone x Ground Block	384	386	388	390	392
Zone x Phase Block	385	387	389	391	393
Zone x AN	960	966	972	978	984
Zone x BN	961	967	973	979	985
Zone x CN	962	968	974	980	986
Zone x AB	963	969	975	981	987
Zone x BC	964	970	976	982	988
Zone x CA	965	971	977	983	989
Zone x Trip	608	613	618	623	628
Zone x Trip A	609	614	619	624	629
Zone x Trip B	610	615	620	625	630
Zone x Trip C	611	616	621	626	631
Zone x Trip N	612	617	622	627	632
Zone x Start A	741	745	749	753	757
Zone x Start B	742	746	750	754	758
Zone x Start C	743	747	751	755	759
Zone x Start N	744	748	752	756	760

Figure 24 Basic scheme delayed trip (Distance option only)

Note: The numbers in the table represent the DDB signals available in the PSL.

1.19 Power swing detection, alarming and blocking (Distance option only)

1.19.1 Detection of power swings (Distance option only)

A power swing may cause the impedance presented to a distance relay to move away from the normal load area and into one or more of its tripping characteristics. In the case of a stable power swing it is important that the relay should not trip. The relay should also not trip during loss of stability since there may be a utility strategy for controlled system break up during such an event.

The power swing detection in the MiCOM P54x is an advanced technique that uses superimposed current (ΔI) detector similar to the phase selection principle described above. However for the power swing detector the current is always compared to that 2 cycles previous. For a fault condition this power swing detector (PSD) will reset after 2 cycles as no superimposed current is detected.

For a power swing, PSD will measure superimposed current for longer than 2 cycles, and it is the length of time for which the superimposed current persists that is used to distinguish between a fault and a power swing. A power swing is deemed to be in progress if a three phase selection, or a phase to phase selection when one pole is open, produced in this way is retained for more than 3 cycles, as shown in Figure 25. At this point the required distance zones can be blocked, to avoid tripping should the swing impedances cross into a tripping zone.

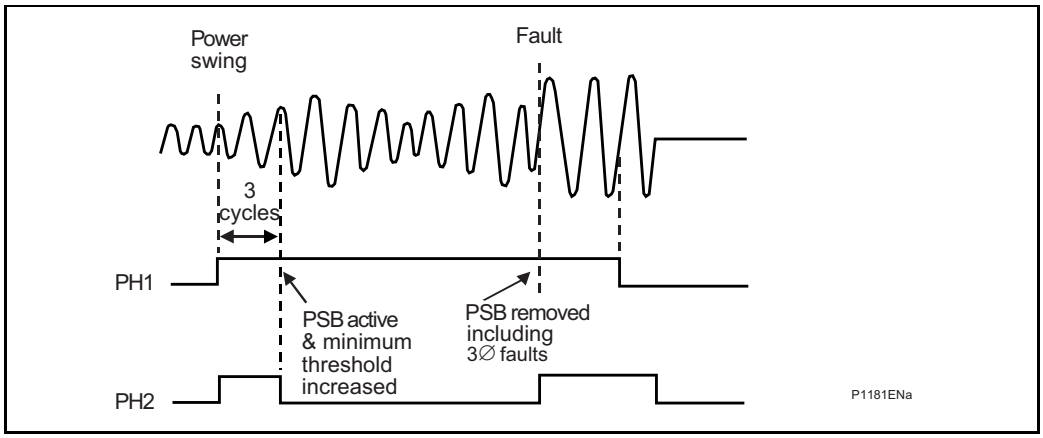

Figure 25 Power swing detected for 3 cycles continuous ΔI (Distance option only)

In order to detect slow power swings, when the superimposed current remains below the minimum threshold (5%In), a complementary method of detection could be used. This method requires zone 5 to be set. For the zone 5 setting, no system study is required, it is only necessary to set the R5 and R5' reach below the minimum possible load impedance, as explained in the Application Section. If the fault impedance remains within a zone 5 for at least 1 cycle without phase selection operation, the slow swing is declared. This complementary method works in parallel to the automatic, setting free technique explained above.

Note: Zone 5 has a dual purpose: OST protection and slow swing detection. There is no conflict in zone 5 settings, i.e. zone 5 settings for OST protection (if applied) perfectly suit slow swing detection.

1.19.2 Actions upon power swing detection (Distance option only)

Once a power swing is detected the following actions occur:

- Distance elements are blocked on selected zones providing blocking is enabled
- All zones are switched to self polarized mho characteristics for maximum stability during the swing
- A power swing block alarm is issued when the swing impedance enters a distance zone. The condition of entering an impedance zone avoids alarming for low current momentary swings that settle quickly
- When a power swing is in progress, the minimum threshold used by the phase selector is increased to twice the maximum superimposed current prevailing in the swing Therefore, the phase selector resets once a power swing is detected. It can then be used to detect a fault during a power swing.

1.19.3 Detection of a fault during a power swing (Distance option only)

A fault is detected during a swing when the phase selector operates, based on its increased threshold. Therefore, any operation of the phase selector will cause PSB unblocking, and allow a trip. Example scenarios are:

- A fault causes the delta current measured to increase above twice that stored during the swing (a step change in delta I rather than the expected gradual transition in a power swing).

1.19.4 Actions upon detection of a fault during a power swing (Distance option only)

- The block signal is only removed from zones that start within 2 cycles of a fault being detected. This improves stability for external faults during power swings. Any measuring zone that was detecting an impedance within its characteristic before The phase selector detected the fault will remain blocked. This minimizes the risk of tripping for a swing impedance that may naturally be passing through Zone 1, and could otherwise cause a spurious trip if all zones were unblocked on fault inception. Any measuring zone that picks up beyond the two cycle window will remain blocked. This minimizes the risk of tripping for a continued swing that may pass through Zone 1, and could otherwise cause a spurious trip if all zones were allowed to unblock together.

1.19.5 Power swing settings (Distance option only)

The power swing detection is setting free aided with slow swing detection that uses zone 5 and does not require any system study. The only setting available to a user, apart from zone 5, is to decide whether a zone should be blocked or allowed to trip after a power swing is detected. Zone by zone, it is possible to select one mode from the following:

- "Allow Trip" - should a power swing locus remain within a trip zone characteristic for a duration equal to the zone time delay, the trip will be allowed to happen;
- "Blocking" - to keep stability for that zone, even if a power swing locus should enter it;
- "Delayed Unblock" - maintains the block for a set duration. If the swing is still present after the "PSB Timeout Set" window has expired, tripping is allowed as normal.

Other setting possibilities are:

- Selection of PSB as “Indication” only will raise an alarm, without blocking any zones.
- The *PSB Unblock Dly* function allows for any power swing block to be removed after a set period of time. For a persistent swing that does not stabilize, any blocked zones will be made free to trip once the timer has elapsed. In setting which relays will unblock, the user should consider which relay locations are natural split points for islanding the power system.
- The *PSB Reset Delay* is a time delay on drop-off timer, which maintains the PSB detection even after the swing has apparently stabilized. It is used to ensure that where the swing current passes through a natural minimum and delta I detection might reset, that the detection does not drop out/chatter. It can therefore be used to ensure a continual Power Swing indication when pole slipping (an unstable out of step condition) is in progress.

A simplified logic diagram showing operation of the power swing blocking is attached as Figure 26 which follows.

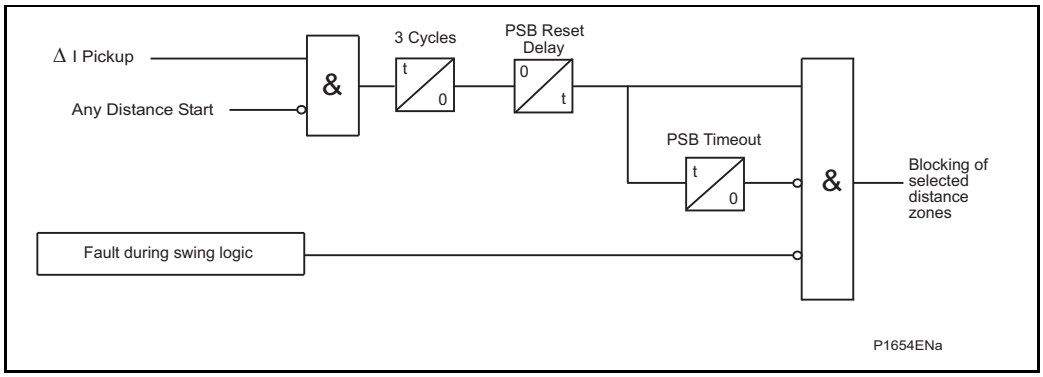

Figure 26 Power swing blocking (Distance option only)

1.20 Out of step detection and tripping (Distance option only)

Out of Step protection is used to split the power system into possibly stable areas of generation and load balance during unstable power oscillations. The points at which the system should be split are determined by detailed system stability studies.

The P54x Out of Step function has 4 different setting options:

1. Disabled
2. Predictive OST
3. OST
4. Predictive OST or OST

When set ‘Disabled’, Out of Step function is not operational. The P54x also provides an option to split the system in advance by selecting the ‘Predictive OST’ (sometimes called an early OST) in order to minimize the angle shift between two ends and aid stability in the split areas. The third setting option is to split the system on detection of the out of step condition i.e. when a pole slip occurs. The fourth option is a combination of the two.

1.20.1 Out of step detection (Distance option only)

The Out of Step detection is based on the well proven $\Delta Z/\Delta t$ principle associated with two concentric polygon characteristic, as presented in Figure 27.

OP

OP

1.20.1.1 Characteristic (Distance option only)

Both polygon characteristics are independent and have independent settings for their respective reactance and resistive reaches.

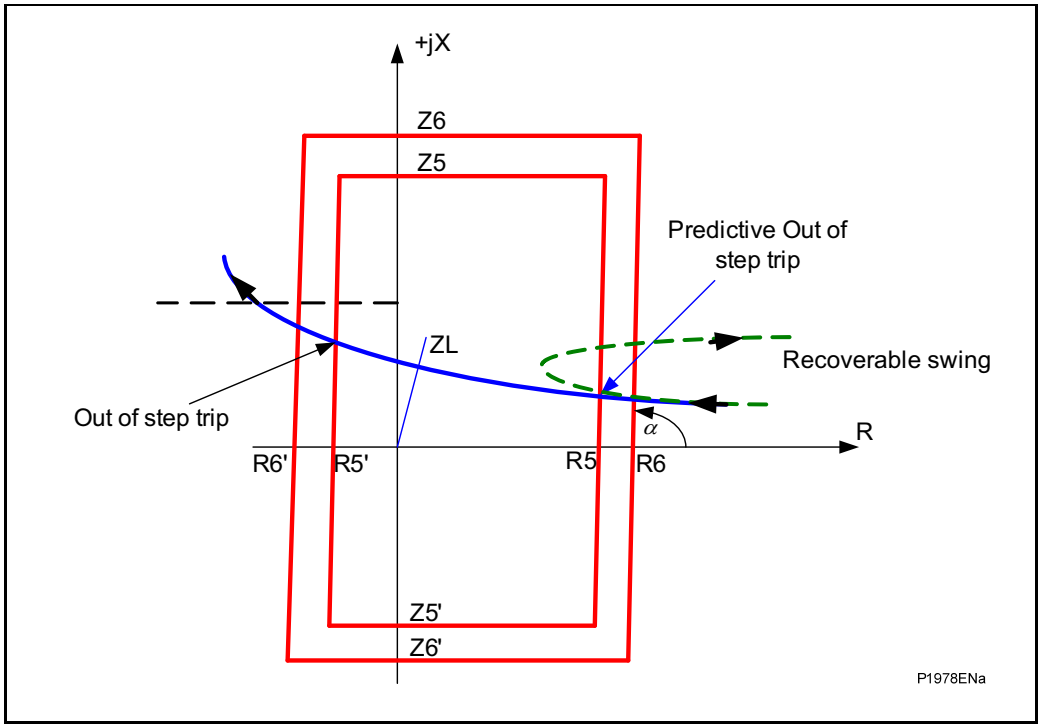

Figure 27 Out of step detection characteristic (Distance option only)

Both the inner (Zone 5) and outer (Zone 6) characteristics, as shown above, are settable in positive sequence impedance terms to ensure correct Out of Step detection during open pole swing conditions. Hence, there is only one Z5 and Z6 positive sequence impedance polygon characteristic instead of 6 characteristics for each measured loop. The measured positive sequence impedance is calculated as:

Z1 = V1/I1

Where V1 and I1 are positive sequence voltage and current derived from the measured phase quantities. Note that during symmetrical power oscillations, there is no difference between phase impedance loops and positive sequence impedance loop, whilst for the open pole oscillations the phase and positive sequence impedances are different. This fact must be taken into account during testing/commissioning.

All four resistive blinders are parallel, using the common angle setting ‘α’ that corresponds to the angle of the total system impedance ZT (= ZS + ZL + ZR), where ZS and ZR are equivalent positive sequence impedances at the sending and receiving ends and ZL positive sequence line impedance. Tilting of the reactance line and residual compensation is not implemented.

In Figure 26, the solid impedance trajectory represents the locus for the non-recoverable power oscillation, also known as pole slip or out of step condition. The dotted impedance trajectory on the other hand represents a recoverable power oscillation, usually called swings.

1.20.1.2 Operating principle (Distance option only)

The Out of Step detection algorithm is based on measuring the speed of positive sequence impedance passing through the set ΔZ region. As soon as measured positive sequence impedance touches the outer polygon, a timer is started.

If the disturbance takes less than 25 ms from entering zone 6 to entering zone 5, the relay will consider this to be a power system fault and not an out of step trip condition. The timer of 25 ms is a fixed timer in the logic and not user accessible. During a power system fault, the speed of impedance change from a load to a fault is fast, but the relay may operate slower for marginal faults close to a zone boundary, particularly for high resistive faults inside the zone operating characteristic and close to the Z5 boundary. Therefore, the fixed time of 25 ms is implemented to provide sufficient time for a distance element to operate and therefore to distinguish between a fault and an extremely fast power system oscillation.

If the disturbance takes more than 25 ms but less than DeltaT set time from entering Zone 6 to entering Zone 5, this will be seen as a very fast oscillation. Therefore, the relay will trip if setting option 2 or 4 was selected. The minimum DeltaT setting is 30 ms, allowing 5 ms margin to the fixed 25 ms timer.

If the disturbance takes longer than the DeltaT setting time to enter Zone 5 after entering Zone 6 then it is considered as a slow power oscillation. On entering Z5, the relay will record the polarity of the resistive part of the positive sequence impedance. Two scenarios are possible:

1. If the resistive part of the positive sequence impedance leaves Z5 with the same polarity as previously recorded on entering Zone 5, it is deemed a recoverable swing. No tripping will be issued.

2. If the resistive part of the positive sequence impedance has the opposite polarity when exiting Zone 5 to that of the recorded polarity on Zone 5 entering, an Out of Step condition is recognized, followed by the tripping if setting option 3 or 4 was selected. It should be noted that in the case when the DeltaT timer did not expire and setting option 3 is selected, the Out of Step condition will also be detected, followed by OST operation.

As the tripping mode for the detected Out of Step condition is always 3 ph trip, the ‘Predictive OST’ and OST DDB signals are mapped to the 3ph tripping in the default PSL. Also, Out of Step operation will block auto-reclose function. The Out of Step tripping time delay TOST is also available to delay the OST tripping command until the angle between internal voltages between two ends are at 240 deg closing towards 360 deg. This is to limit the voltage stress across the circuit breaker. In the case of a fault occurring during the swing condition, the out of step tripping function will be blocked.

The Out of Step algorithm is completely independent from the distance elements and setting free power swing detection function. The load blinder does not have any effect on the OST characteristics. For the Out of Step operation, the minimum positive sequence current of 5%In must be present.

The Out of Step algorithm is given in Figure 28.

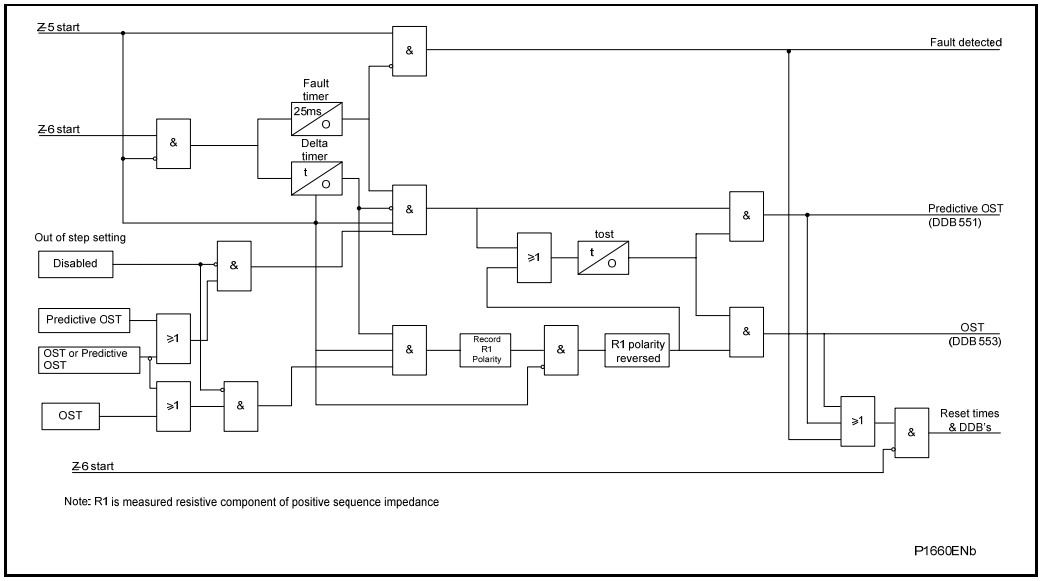

Figure 28 Out of step algorithm (Distance option only)

OP

1.21 Switch on to fault (SOTF) and trip on reclose (TOR) (Distance option only)

The settings for SOTF and TOR are included in the menu column **TRIP ON CLOSE** (TOC) within the MiCOM P54x relay. The settings are designed to deal with two different scenarios.

- SOTF is designed to provide instantaneous operation of selected elements for a fault present on manual closure of the circuit breaker;
- TOR is designed to provide instantaneous operation of selected elements for a persistent fault present on auto-reclosing of the circuit breaker.

The SOTF and TOR functions are communally termed **Trip on Close** logic. The operation of these features is split into two Figures for clarity: Figure 29 shows Trip On Close function in relation with the Distance zones while Figure 30 presents Trip On Close driven by 'Current No Volt' level detectors. Both methods operate in parallel if mapped to the SOTF and TOR Tripping matrix in the setting file.

The 'Current No Volt' (CNV) level detectors are user settable in the 'GROUP X CB FAIL & P. Dead' column. The same setting is used for pole dead logic detection – see Settings chapter for more details. The 20 ms time delay in the Figure 30 is to avoid a possible race between very fast overvoltage and undercurrent level detectors.

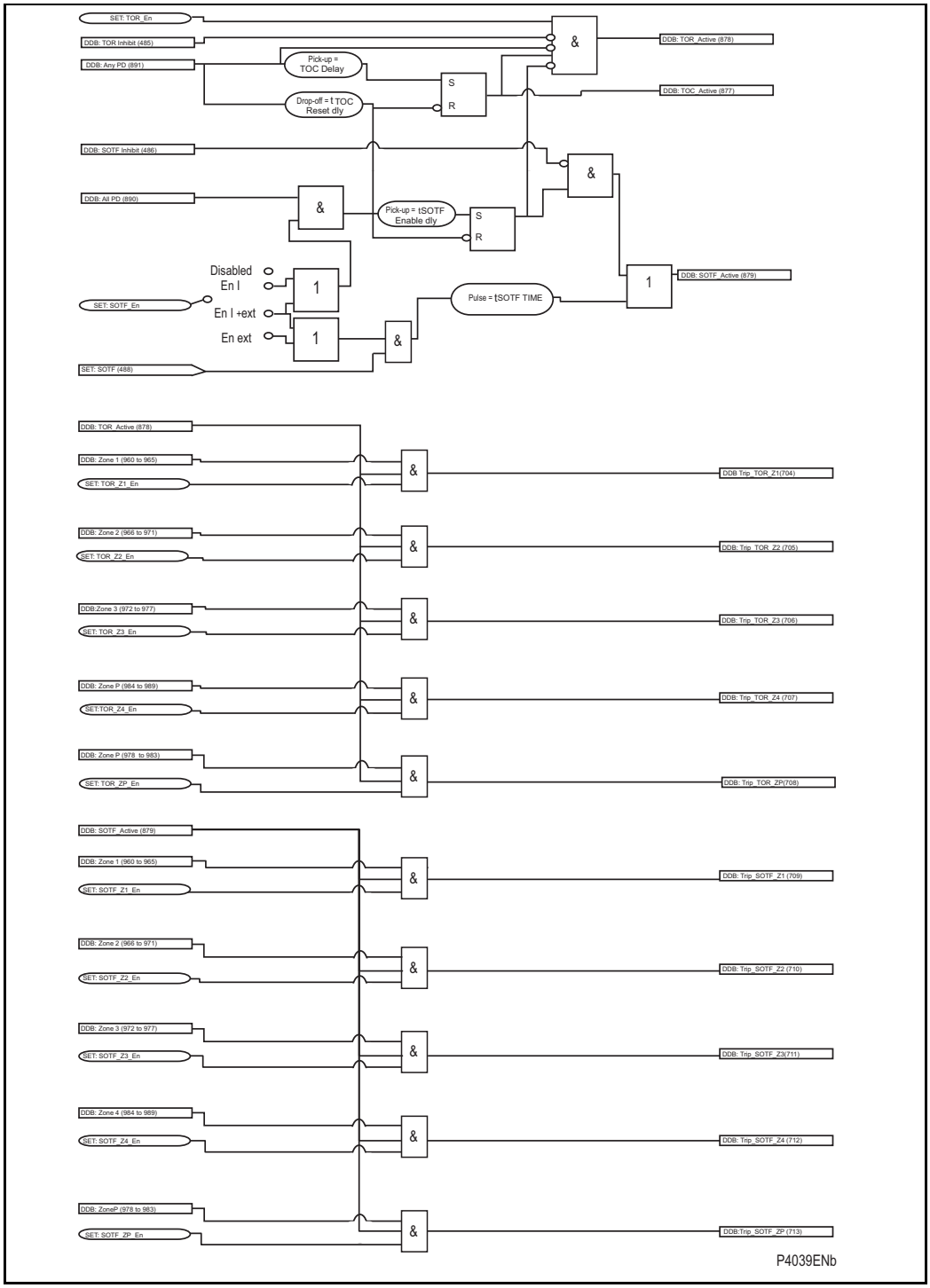

Figure 29 Trip on close (Distance option only)

OP

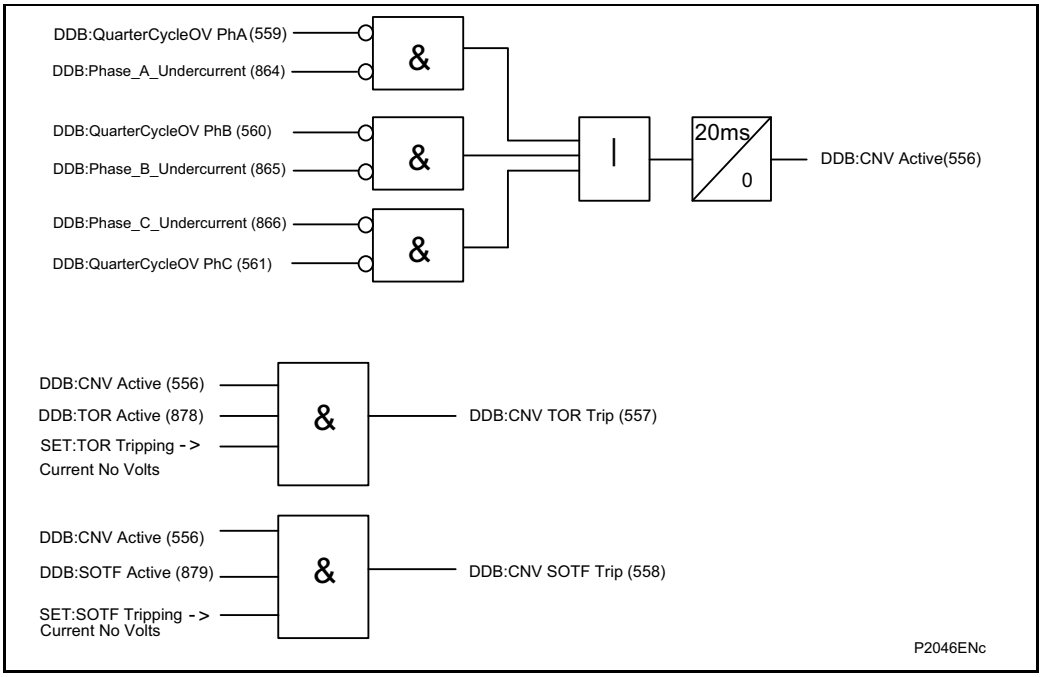

OP

Figure 30 Trip on close based on CNV level detectors (Distance option only)

1.21.1 Switch onto fault mode

The settings applied are as follows:

<u>SOTF Status</u> - SOTF can be activated in three different manners:

1. Enabled by using pole dead logic detection logic. A 'SOTF Delay' timer starts if "all pole dead" condition is detected. Once this timer expires, SOTF becomes enabled and remains active during the period set on **TOC Reset Delay** setting.

2. Enabled by an external pulse. SOTF becomes enabled after an external pulse (as a circuit breaker close command for example) linked to DDB **Set SOTF** (DDB 488) is ON. The function remains active for the duration of the **SOTF Pulse** setting.

3. Enabled by using the two previous methods.

With this feature *Enabled*, the relay operates in Switch on to Fault mode. Three pole instantaneous tripping (and auto-reclose blocking) occurs for any fault detected by the selected zones or/and 'Current No Volt' level detectors when in Switch on to Fault mode. Whether this feature is enabled or disabled, the normal time delayed elements or aided channel scheme continues to function and can operate to trip the circuit.

<u>TOC Reset Delay</u> - The SOTF (when enabled by pole dead detection logic) and TOR features remain in-service for the duration of the TOC reset delay once the circuit is energized.

<u>SOTF Tripping Link</u> - While the Switch on to Fault Mode is active, the MiCOM P54x will trip instantaneously for pick up of any zone selected in these links. To operate for faults on the entire circuit length it is recommended that at least Zone 1 and Zone 2 are selected. If no elements are selected then the normal time delayed elements and aided scheme provide the protection.

1.21.2 Trip on reclose mode (Distance option only)

The settings applied are as follows:

TOR Status - With this feature Enabled, for a period following circuit breaker closure, the relay operates in Trip on Reclose mode. Three pole instantaneous tripping occurs for any fault detected by the selected zones or/and 'Current No Volt' level detectors. Whether this feature is enabled or disabled, the normal time delayed elements or aided channel scheme continue to unction and can operate to trip the circuit.

TOC Reset Delay - The SOTF and TOR features remain in-service for the duration of the TOC reset delay once the circuit is energized.

TOC Delay - Is a user settable time delay that starts upon opening the CB after which the 'TOR' becomes active (enabled). The time delay must not exceed the minimum Dead Time setting as both times start simultaneously and TOR protection must be ready by the time of CB closing on potentially persistent faults.

TOR Tripping Links - While the Trip on Reclose Mode is active, the MiCOM P54x will trip instantaneously for pick up of or/and 'Current No Volt' level detectors any zone selected in these links. To operate for faults on the entire circuit length it is recommended that at least Zone 1 and Zone 2 are selected. If no elements are selected then the normal time delayed elements and aided scheme provide the protection.

OP

1.21.3 Polarization during circuit energization (Distance option only)

While the Switch on to Fault and Trip on Reclose modes are active, the directionalized distance elements are partially cross polarized from other phases. The same proportion of healthy phase to faulted phase voltage as given by the Distance Polarizing setting in the DISTANCE SETUP menu is used.

Partial cross polarization is therefore used in substitute for the normal memory polarizing, for the duration of the TOC window. If insufficient polarizing voltage is available, a slight reverse offset (10% of the forward reach) is included in the zone 1 characteristic to enable fast clearance of close up three phase faults. Therefore, the mapping of CNV function to the SOTF tripping matrix is not essential.

1.22 Directional function - setup of DEF and directional comparison elements (Distance option only)

The MiCOM P54x with distance option installed has one additional aided channel ("pilot") scheme that can be used to supplement differential and distance protection.

- DEF - Directional earth (ground) fault protection;
- Delta - ΔI and ΔV based directional comparison scheme.

Both schemes are configured as unit protection, with a communication channel connected between the remote line ends.

In order to make use of these schemes, base setting data must be made in the GROUP x DISTANCE SETUP (for Delta comparison scheme) and GROUP x/ AIDED DEF (For Directional earth fault protection)

OP

1.22.1 DEF zero sequence polarization with “virtual current polarizing” (Distance option only)

With earth fault protection, the polarizing (directional reference) signal requires to be representative of the earth fault condition. As residual voltage is generated during earth fault conditions, this quantity is commonly used to polarize the directional decision of DEF elements. The relay internally derives this voltage from the 3 phase voltage input which must be supplied from either a 5-limb or three single phase VTs. These types of VT design allow the passage of residual flux and consequently permit the relay to derive the required residual voltage. In addition, the primary star point of the VT must be earthed. A three-limb VT has no path for residual flux and, is therefore unsuitable to supply the relay.

It is possible that small levels of residual voltage will be present under normal system conditions due to system imbalances, VT inaccuracies, relay tolerances etc. Hence, the relay includes a user settable threshold (DEF VNPol Set) which must be exceeded in order for the DEF function to be operational. Note that residual voltage is nominally 180° out of phase with residual current. Consequently, the DEF relays are polarized from the '-Vres' quantity. This 180° phase shift is automatically introduced within the relay.

A distinct advantage of the MiCOM P54x is that the relay can trip by this method of polarizing, even if VNpol is less than the set threshold. Provided that the superimposed current phase selector has identified the faulted phase (suppose phase A), it will remove that phase from the residual calculation Va + Vb + Vc, leaving only Vb + Vc. The resultant polarizing voltage will have a large magnitude, and will be in the same direction as –Vres. This allows the relay to be applied even where very solid earthing behind the relay prevents residual voltage from being developed.

This technique of subtracting the faulted phase is given the description “virtual current polarizing” as it removes the need to use current polarizing from a CT in a transformer star (wye)-ground connection behind the relay. This would have been necessary with traditional relays.

The directional criteria with zero sequence (virtual current) polarization are given below:

Directional forward

-90° < (angle(IN) - angle(VNpol+180°) - RCA) < 90°

Directional reverse

-90° > (angle(IN) - angle(VNpol+180°) - RCA) > 90°

Where VNpol is as per the table below:

Phase selector pickup	VNpol
A Phase Fault	VB + VC
B Phase Fault	VA + VC
C Phase Fault	VA + VB
No Selection	VN = VA + VB + VC

1.22.2 DEF negative sequence polarization (Distance option only)

In certain applications, the use of residual voltage polarization of DEF may either be not possible to achieve, or problematic. An example of the former case would be where a suitable type of VT was unavailable, for example if only a three-limb VT was fitted. An example of the latter case would be an HV/EHV parallel line application where problems with zero sequence mutual coupling may exist.

In either of these situations, the problem may be solved by the use of negative phase sequence (nps) quantities for polarization. This method determines the fault direction by comparison of nps voltage with nps current. The operate quantity, however, is still residual current. It requires a suitable voltage and current threshold to be set in cells **DEF V2pol Set** and **DEF I2pol Set**, respectively.

The directional criteria with negative sequence polarization are given below:

Directional forward

-90° < (angle(I2) - angle(V2+180°) - RCA) < 90°

Directional reverse

-90° > (angle(I2) - angle(V2+180°) - RCA) > 90°

1.22.3 Delta directional comparison principle and setup (Distance option only)

Note: The characteristic angle set in this section is also used by the DISTANCE PROTECTION. This is because distance zones are directionalized by the delta decision.

Delta directional comparison looks at the relative phase angle of the superimposed current ΔI compared to the superimposed voltage ΔV, at the instant of fault inception. The delta is only present when a fault occurs and a step change from the prefault steady-state load is generated by the fault itself. The element will issue a forward or reverse decision, which can be used to input into an aided channel unit protection scheme.

Under healthy network conditions, the system voltage will be close to Vn nominal, and load current will be flowing. Under such steady-state conditions, if the voltage measured on each phase now is compared with a stored memory from exactly two power system cycles previously (equal to 96 samples), the difference between them will be zero. Zero change equals zero “delta” (ΔV = 0). The same will be generally true for the current (ΔI = 0), except when there are changes in load current etc.

OP

When a fault occurs on the system, the delta changes measured will be:

ΔV	=	fault voltage (time “t”)	-	prefault healthy voltage (t-96 samples)
ΔI	=	fault current (time “t”)	-	prefault load current (t-96 samples)

The delta measurements are a vector difference, resulting in a delta magnitude and angle. Under healthy system conditions, the prefault values will be those measured 2 cycles earlier, but when a fault is detected, the prefault values will be retained for the duration of the fault.

The changes in magnitude are used to detect the presence of the fault, and the angles are used to determine whether the fault is in the Forward or Reverse direction.

Consider a single phase to ground fault as shown in Figure 31 below.

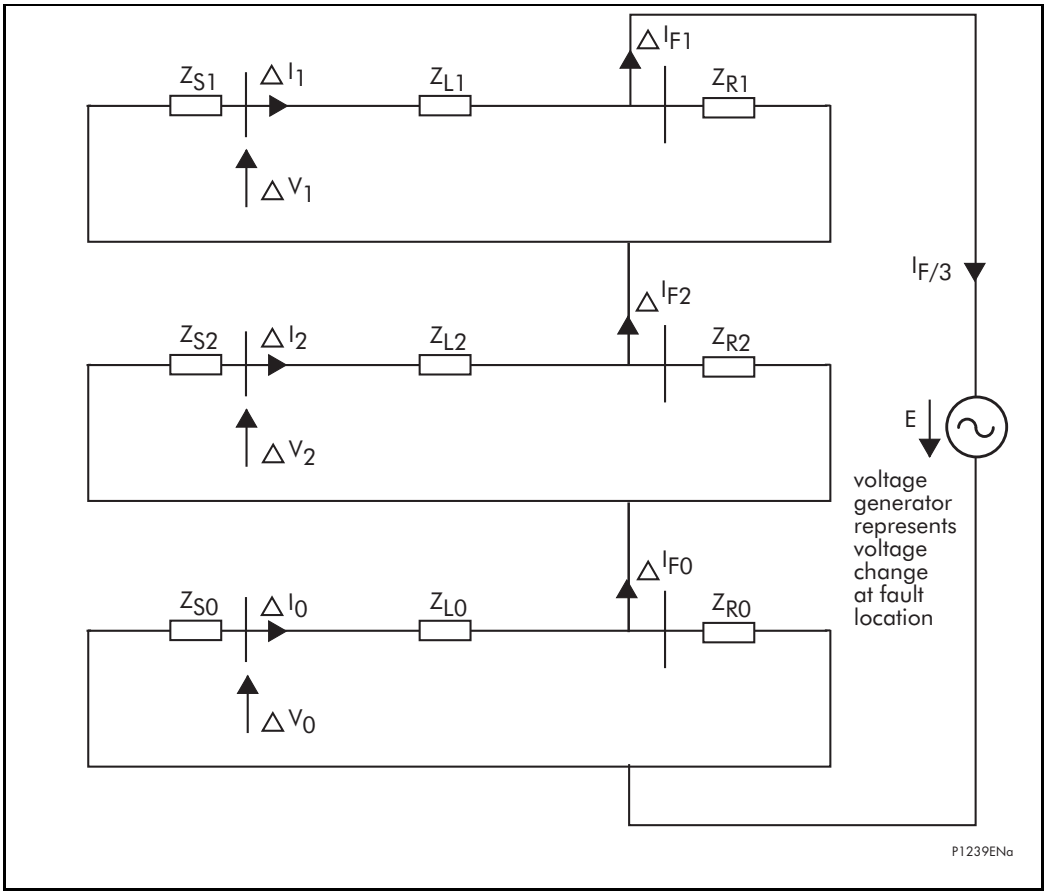

Figure 31 Sequence networks connection for an internal A-N fault (Distance option only)

The fault is shown near to the busbar at end R of the line, and results in a connection of the positive, negative, and zero sequence networks in series. Drawing the delta diagram, it is seen that any fault is effectively a generator of Δ, connected at the location of fault inception. The characteristics are:

1. The ΔI generated by the fault is equal to the total fault arc current;
2. The ΔI will split into parallel paths, with part contribution from source "S", and part from remote end "R" of the line. Therefore, each relay will measure a lower proportion of delta I;
3. The ΔV generated by the fault is equal to the fault arc voltage minus the prefault voltage (and so will be in antiphase with the prefault voltage);
4. The ΔV will generally be smaller as measured at the relay location, due to the voltage collapse being smaller near to the source than at the fault itself. The delta V measured by a relay is effectively the voltage drop across the source impedance behind the relay location.

If a fault were to occur at any point on the protected line, the resulting ΔI and ΔV as measured at the relay location must be greater than the **Delta I Fwd** and **Delta V Fwd** settings, in order that the fault can be detected. (Scenarios (2) and (4) above must be verified for all fault types: Ph-G, Ph-Ph, Ph-Ph-G, and 3-phase)

OP

1.22.4 Delta directional decision (Distance option only)

On fault inception, delta quantities are generated, and it is then simple for the relay to determine the direction of the fault:

Forward fault - Delta V is a decrease in voltage, and so is in the negative sense; whereas delta I is a forward current flow and so is in the positive sense. Where delta I and delta V are approximately in antiphase, the fault is forward. The exact angle relationship for the forward fault is:

$$\Delta V / \Delta I = -(\text{Source impedance, } Zs)$$

Reverse fault - Delta V is a decrease in voltage, and so is in the negative sense; delta I is an outfeed flowing in the reverse direction, so that too is in the negative sense. Where delta I and delta V are approximately in phase, the fault is reverse. The exact angle relationship for the reverse fault is:

$$\Delta V / \Delta I = (\text{Remote Source impedance } Zs' + ZL)$$

Where ZL is protected line impedance and Zs' source impedance behind the relay.

An RCA angle setting in the relay allows the user to set the center of the directional characteristic, according to the amount the current will nominally lag the reference delta voltage. The characteristic boundary will then be ± 90 degrees either side of the set center.

OP

Note: Distance zone directionalizing shares the same characteristic angle setting used for Delta directional comparison protection, but uses fixed operating thresholds: ΔV=0.5V and ΔI=4%In. In distance applications, if the fault ΔV is below the setting of 0.5V, a conventional distance line ensures correct forward/reverse polarizing. This is not true for Delta directional aided schemes where sufficient ΔV must be present, for tripping to occur.

The directional criteria for delta directional decisions are given below:

Directional forward

$$-90o < (\text{angle}(\Delta I) - \text{angle}(\Delta V + 180^{o}) - RCA) < 90^{o}$$

Directional reverse

$$-90^{o} > (\text{angle}(\Delta I) - \text{angle}(\Delta V + 180^{o}) - RCA) > 90^{o}$$

In order to facilitate testing of the Distance elements using test sets which do not provide a dynamic model to generate true fault delta conditions, a Static Test Mode setting is provided. This setting is found in the COMMISSIONING TESTS menu column. When set, this disables phase selector control and forces the relay to use a conventional (non-delta) directional line.

1.23 Channel aided schemes (Distance option only)

The MiCOM P54x offers two sets of aided channel ("pilot") schemes, which may be operated in parallel.

Aided Scheme 1 - May be keyed by distance and/or DEF and/or delta directional comparison;

Aided Scheme 2 - May be keyed by distance and/or DEF and/or delta directional comparison;

The provision of two discrete channel selections would allow the following to be implemented, as an example:

- Distance POR with DEF POR scheme operating over a common shared channel… Select both in AIDED SCHEME 1 only, with AIDED SCHEME 2 **Disabled**.
- Distance PUR with DEF BLOCKING operating over separate channels due to the dissimilar scheme types. Assign Distance to AIDED SCHEME 1, and DEF to AIDED SCHEME 2.
- Directional Comparison BLOCKING scheme with a second channel for a distance with DEF BLOCKING scheme operating in unison… Assign **Delta** to AIDED SCHEME 1, and both Distance/DEF to AIDED SCHEME 2.

Note: Where schemes share a common channel, the signal send and signal receive logic operates in a logical "OR" mode.

Aided Scheme 1 and Aided Scheme 2 are two instances of the same logic. Each of these schemes provides the same options and can be independently applied. The scheme logic is split into three sections defined in the following diagram: send logic, receive logic, and aided tripping logic, as shown in Figure 32. Detailed scheme descriptions follow later. As there are two instances of the aided scheme, any internal logic signals which are specific to the instance of the scheme are shown in the diagrams with two DDB numbers relating to the first and second instance, respectively.

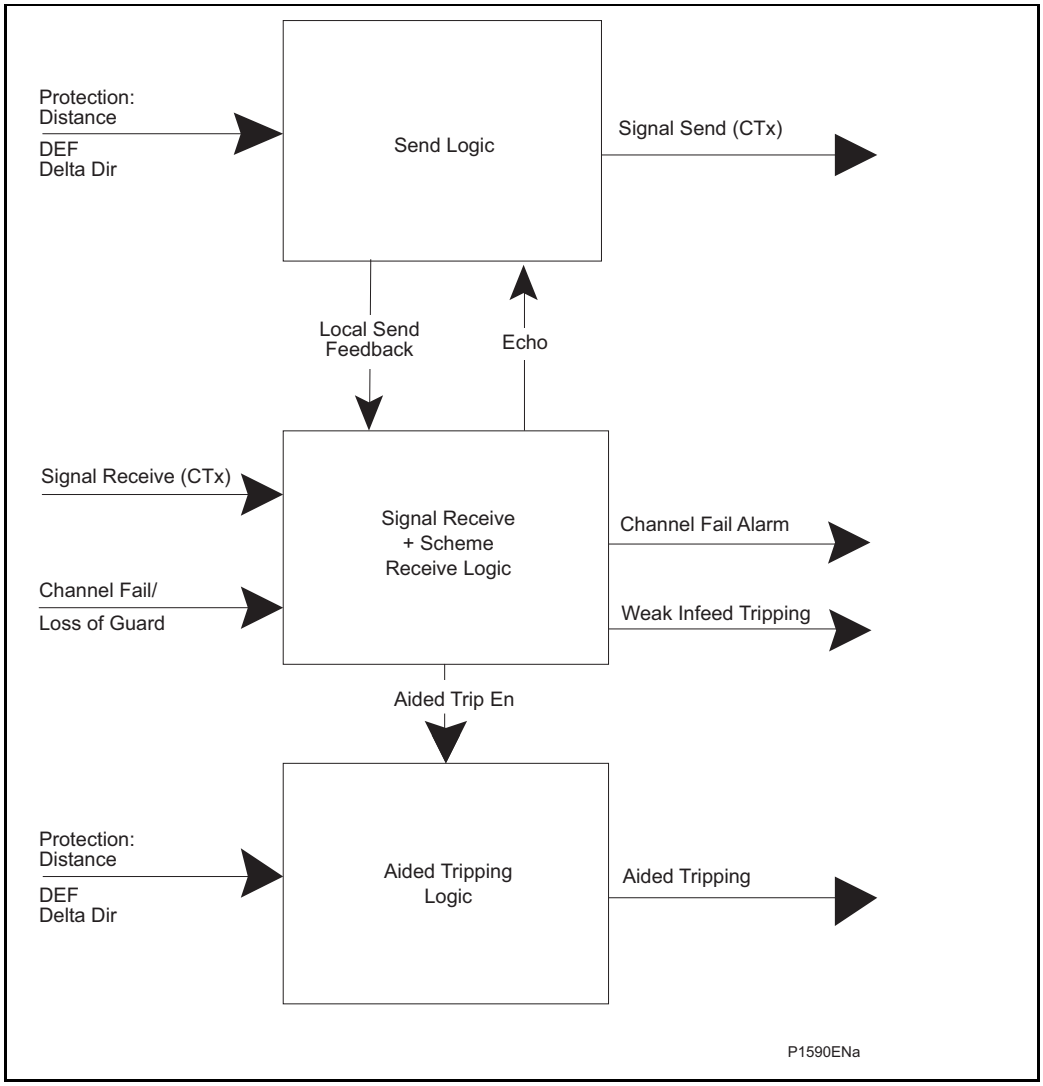

Figure 32 Aided scheme logic overview (Distance option only)

The full Logic Diagrams of the Send, Receive and Aided Trip Logic are now attached here, for reference. It is not necessary to understand the entire logic in order to apply any scheme, as in later sections abbreviated scheme diagrams are available.

OP

OP

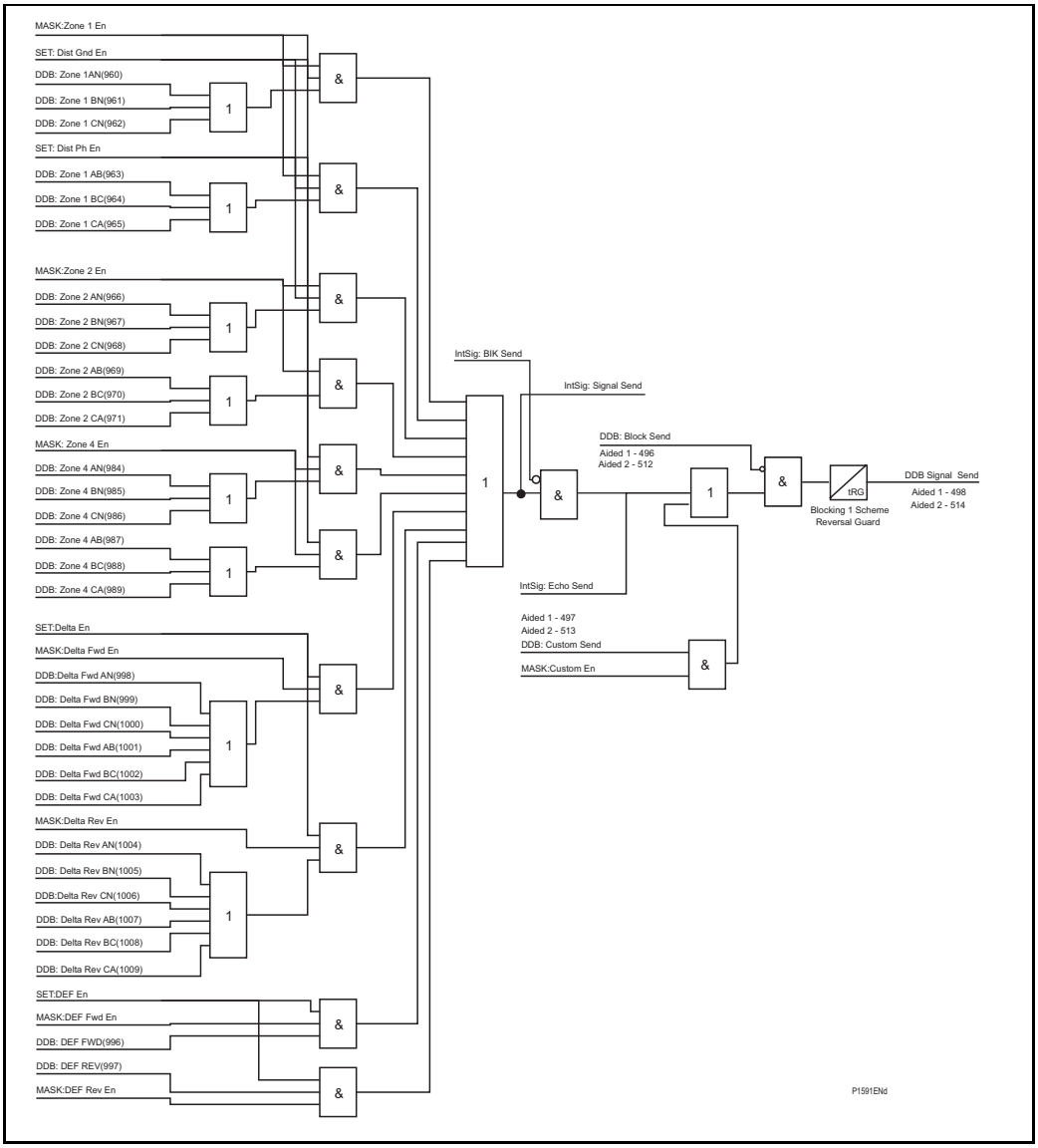

Figure 33 Send logic (Distance option only)

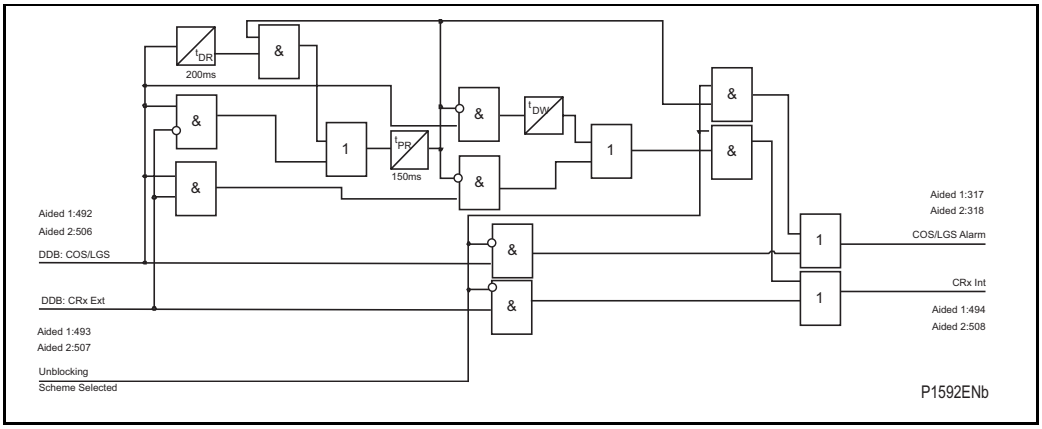

Figure 34 Receive logic (Distance option only)

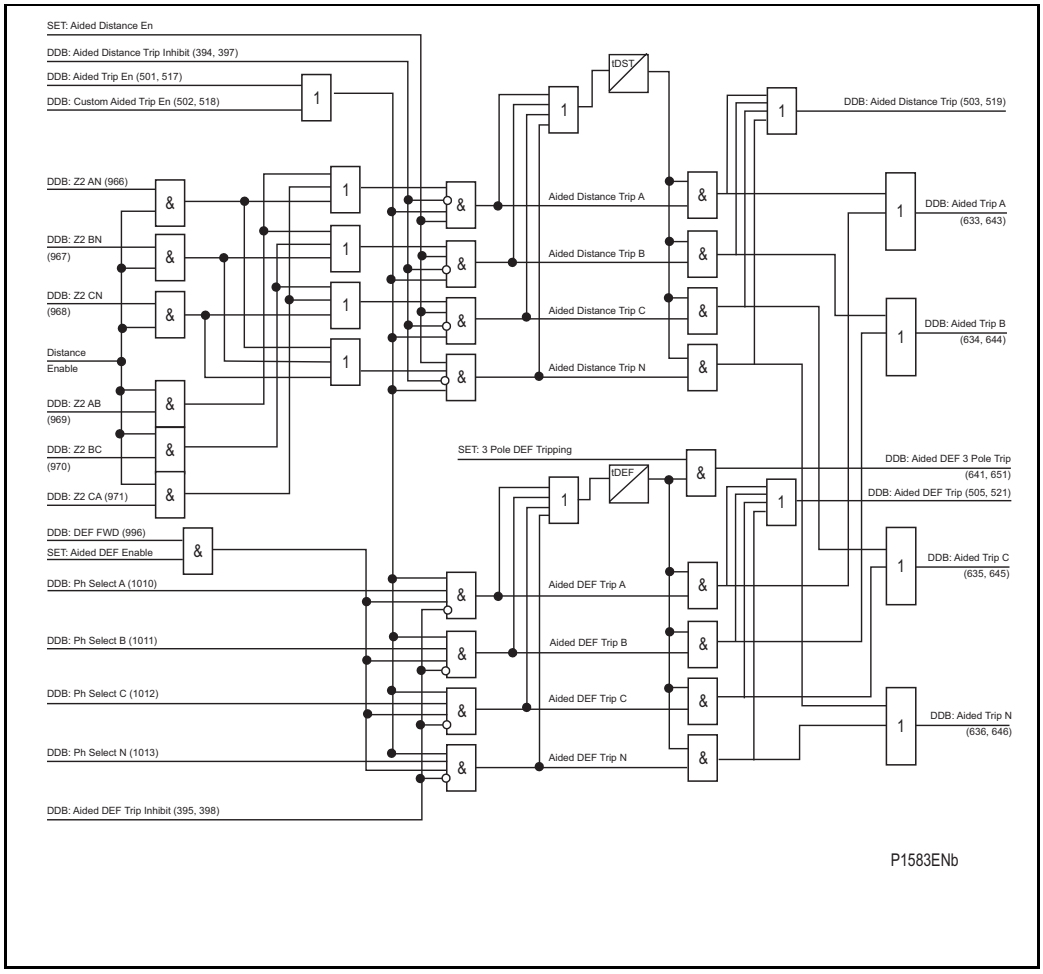

Figure 35 Aided tripping logic

1.23.1 Distance scheme PUR - permissive underreach transfer trip (Distance option only)

To provide fast fault clearance for all faults, both transient and permanent, along the length of the protected circuit, it is necessary to use a signal aided tripping scheme. The simplest of these is the permissive underreach protection scheme (PUR). The channel for a PUR scheme is keyed by operation of the underreaching zone 1 elements of the relay. If the remote relay has detected a forward fault upon receipt of this signal, the relay will operate with no additional delay. Faults in the last 20% (Note 1) of the protected line are therefore cleared with no intentional time delay.

Note 1: Assuming a 20% typical “end-zone” when Zone 1 is set to 80% of the protected line.

Listed below are some of the main features/requirements for a permissive underreaching scheme:

- Only a simplex signaling channel is required
- The scheme has a high degree of security since the signaling channel is only keyed for faults within the protected line
- If the remote terminal of a line is open then faults in the remote 20% of the line will be cleared via the zone 2 time delay of the local relay
- If there is a weak or zero infeed from the remote line end, (i.e. current below the relay sensitivity), then faults in the remote 20% of the line will be cleared via the zone 2 time delay of the local relay
- If the signaling channel fails, Basic distance scheme tripping will be available

OP

Figure 36 shows the simplified scheme logic.

Send logic: Zone 1

Permissive trip logic: Zone 2 plus Channel Received

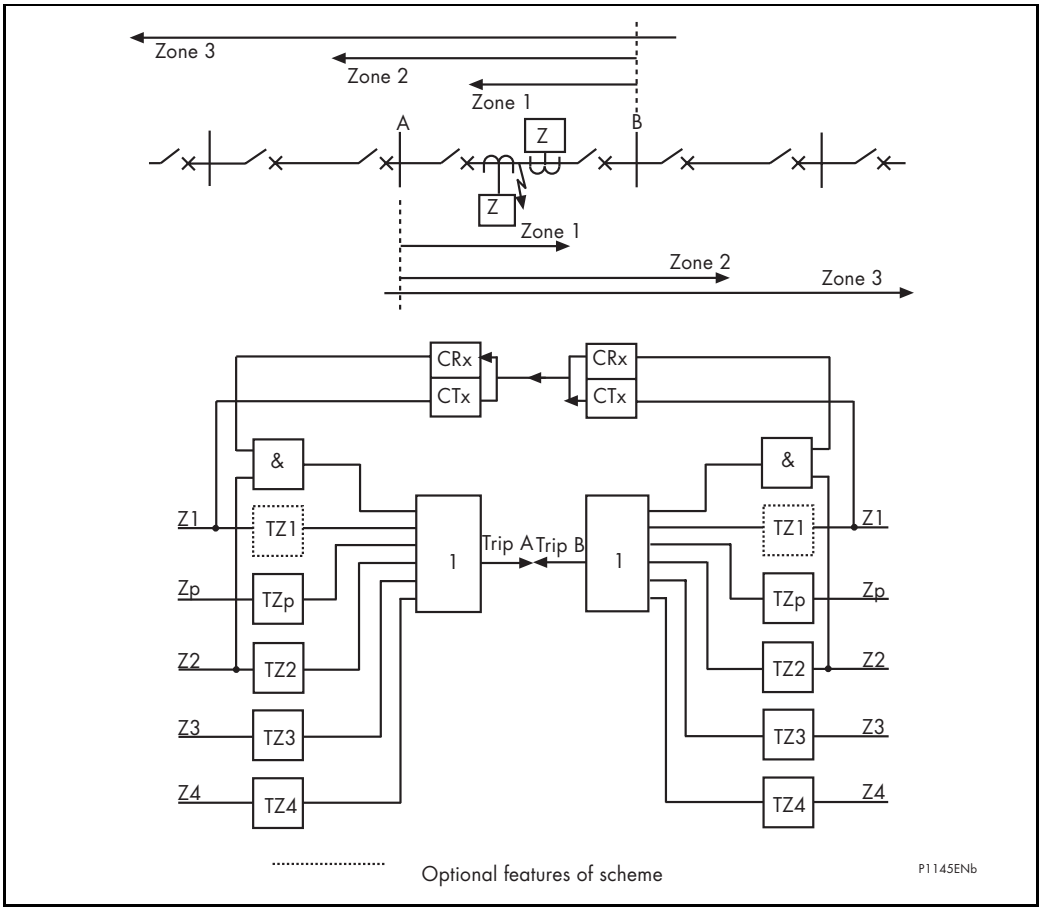

Figure 36 Permissive underreach transfer trip scheme (PUR) (Distance option only)

Detailed logic is shown in Figure 37, as follows:

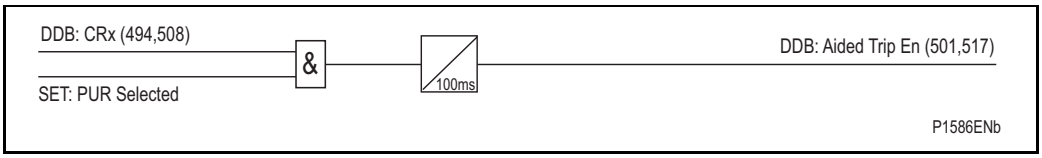

Figure 37 PUR (Distance option only)

1.23.2 Distance scheme POR - permissive overreach transfer trip (Distance option only)

The channel for a POR scheme is keyed by operation of the overreaching zone 2 elements of the relay. If the remote relay has detected a forward fault upon receipt of this signal, the relay will operate with no additional delay. Faults in the last 20% (Note 1) of the protected line are therefore cleared with no intentional time delay.

Note 1: Assuming a 20% typical “end-zone” when Zone 1 is set to 80% of the protected line.

OP

Listed below are some of the main features/requirements for a permissive overreaching scheme:

- The scheme requires a duplex signaling channel to prevent possible relay maloperation due to spurious keying of the signaling equipment. This is necessary due to the fact that the signaling channel is keyed for faults external to the protected line.
- The POR scheme may be more advantageous than permissive underreach schemes for the protection of short transmission lines, since the resistive coverage of the Zone 2 elements may be greater than that of the Zone 1 elements.
- Current reversal guard logic is used to prevent healthy line protection maloperation for the high speed current reversals experienced in double circuit lines, caused by sequential opening of circuit breakers.
- If the signaling channel fails, Basic distance scheme tripping will be available.

Note: The POR scheme also uses the reverse looking zone 4 of the relay as a reverse fault detector. This is used in the current reversal logic and in the optional weak infeed echo feature, shown dotted in Figure 38.

Send logic: Zone 2

Permissive trip logic: Zone 2 plus Channel Received

OP

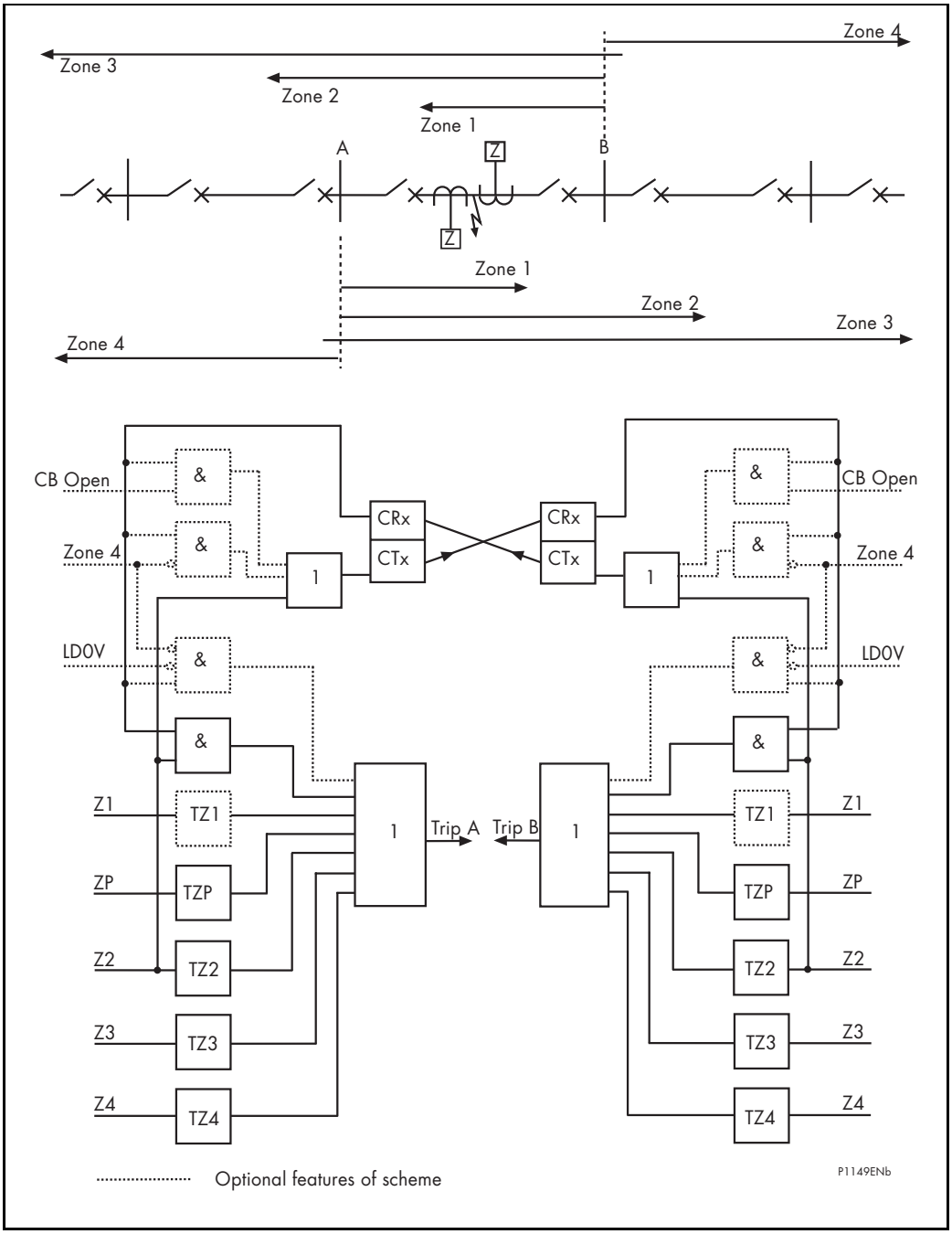

Figure 38 Permissive overreach transfer trip scheme (POR) (Distance option only)

Detailed logic is shown in Figure 39, as follows:

Note: The DDB **Any Trip** (522) feeds into a 100 ms delay on drop-off timer, which in turn leads to signal sending. This is a principle similar to the logic which results in a signal send for weak infeed and breaker open echoing.

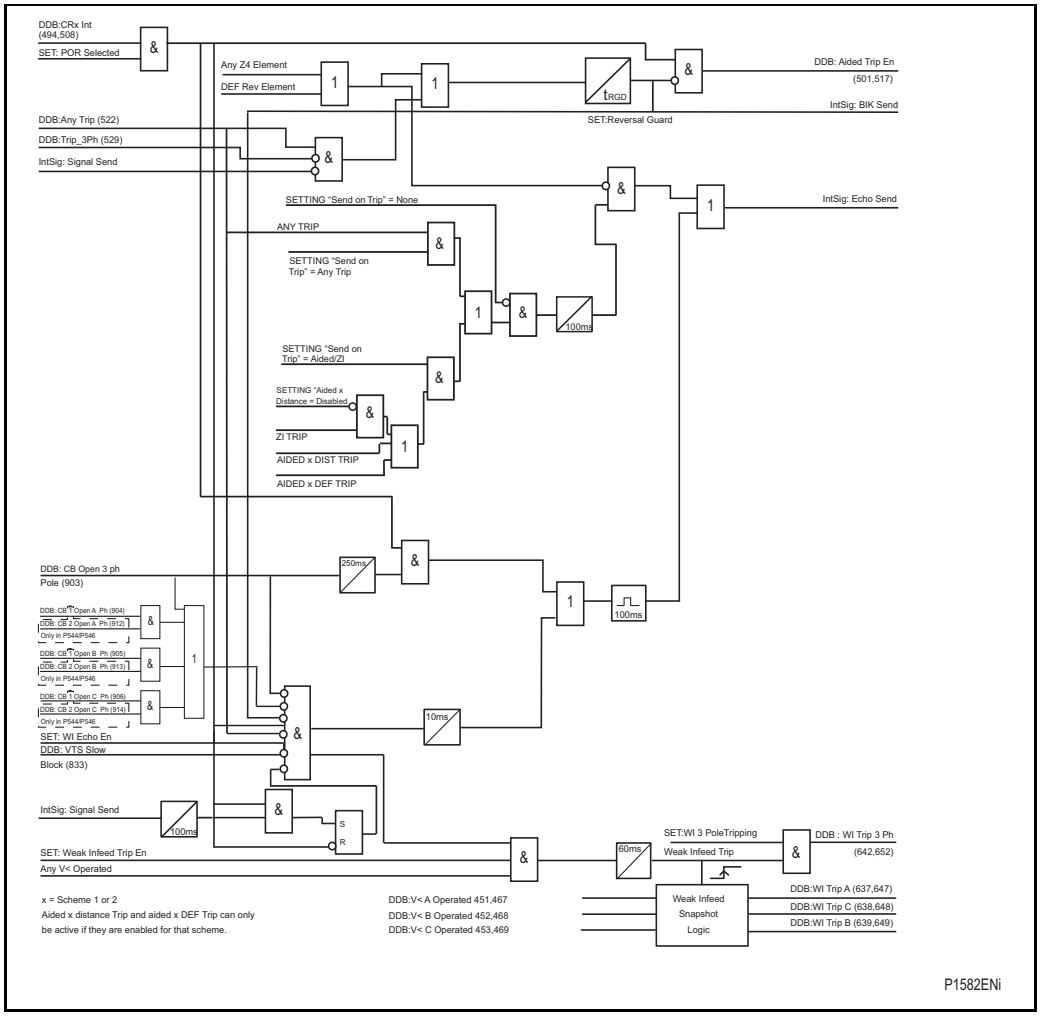

Figure 39 POR

1.23.3 Permissive overreach trip reinforcement (Distance option only)

The send logic in the POR scheme is done in such a way that for any trip command at the local end, the relay sends a channel signal to the remote end(s) in order to maximize the chances for the fault to be isolated at all ends. It should be noted that the send signal that is generated by the 'Any trip' command is sent on both channels, Ch1 and Ch2, if more then one channel is in use. This feature is termed **permissive trip reinforcement**, and is a deliberate attempt to ensure that synchronous tripping occurs at all line ends.

OP

1.23.4 Permissive overreach scheme weak infeed features (Distance option only)

Weak infeed logic can be enabled to run in parallel with the POR schemes. Two options are available: WI Echo, and WI Tripping.

(**Note:** Special stub-end transformer Weak Infeed is covered in section 1.37)

Weak Infeed Echo - For permissive schemes, a signal would only be sent if the required signal send zone were to detect a fault. However, the fault current infeed at one line end may be so low as to be insufficient to operate any distance zones, and risks a failure to send the signal. Also, if one circuit breaker had already been left open, the current infeed would be zero. These are termed weak infeed conditions, and may result in slow fault clearance at the strong infeed line end (tripping after time tZ2). To avoid this slow tripping, the weak infeed relay can be set to "echo" back any channel received to the strong infeed relay (i.e. to immediately send a signal once a signal has been received). This allows the strong infeed relay to trip instantaneously in its permissive trip zone.

The additional signal send logic is:

OP

Echo Send - No Distance Zone Operation, plus Channel Received.

Weak Infeed Tripping - Weak infeed echo logic ensures an aided trip at the strong infeed terminal but not at the weak infeed. The MiCOM P54x also has a setting option to allow tripping of the weak infeed circuit breaker of a faulted line. Three undervoltage elements, Va<, Vb< and Vc< are used to detect the line fault at the weak infeed terminal. This voltage check prevents tripping during spurious operations of the channel or during channel testing.

The additional weak infeed trip logic is:

Weak Infeed Trip - No Distance Zone Operation, plus V<, plus Channel Received.

Weak infeed tripping is time delayed according to the **WI Trip Delay** value. Due to the use of phase segregated undervoltage elements, single pole tripping can be enabled for WI trips if required. If single pole tripping is disabled a three pole trip will result after the time delay.

1.23.5 Permissive scheme unblocking logic - loss of guard (Distance option only)

This mode is designed for use with frequency shift keyed (FSK) power line carrier communications. When the protected line is healthy a guard frequency is sent between line ends, to verify that the channel is in service. However, when a line fault occurs and a permissive trip signal must be sent over the line, the power line carrier frequency is shifted to a new (trip) frequency. Therefore, distance relays should receive either the guard, or trip frequency, but not both together. With any permissive scheme, the PLC communications are transmitted over the power line which may contain a fault. So, for certain fault types the line fault can attenuate the PLC signals, so that the permissive signal is lost and not received at the other line end. To overcome this problem, when the guard is lost and no "trip" frequency is received, the relay opens a window of time during which the permissive scheme logic acts as though a "trip" signal had been received. Two opto inputs to the relay need to be assigned, one is the Channel Receive opto, the second is designated Loss of Guard (the inverse function to guard received). The function logic is summarized in the table below.

System condition	Permissive channel received	Loss of guard	Permissive trip allowed	Alarm generated
Healthy Line	No	No	No	No
Internal Line Fault	Yes	Yes	Yes	No
Unblock	No	Yes	Yes, during a 150 ms window	Yes, delayed on pickup by 150 ms
Signaling Anomaly	Yes	No	No	Yes, delayed on pickup by 150 ms

The window of time during which the unblocking logic is enabled starts 10 ms after the guard signal is lost, and continues for 150 ms. The 10 ms delay gives time for the signaling equipment to change frequency as in normal operation. For the duration of any alarm condition, zone 1 extension logic will be invoked if the option *Z1 Ext on Chan. Fail* has been Enabled.

1.23.6 Distance scheme BLOCKING (Distance option only)

The signaling channel is keyed from operation of the reverse zone 4 elements of the relay. If the remote relay has picked up in zone 2, then it will operate after the trip delay if no block is received. Listed below are some of the main features/requirements for a BLOCKING scheme:

- BLOCKING schemes require only a simplex signaling channel
- Reverse looking Zone 4 is used to send a blocking signal to the remote end to prevent unwanted tripping
- When a simplex channel is used, a BLOCKING scheme can easily be applied to a
- multi-terminal line provided that outfeed does not occur for any internal faults
- The blocking signal is transmitted over a healthy line, and so there are no problems associated with power line carrier signaling equipment
- BLOCKING schemes provides similar resistive coverage to the permissive overreach schemes
- Fast tripping will occur at a strong source line end, for faults along the protected line section, even if there is weak or zero infeed at the other end of the protected line
- If a line terminal is open, fast tripping will still occur for faults along the whole of the protected line length
- If the signaling channel fails to send a blocking signal during a fault, fast tripping will occur for faults along the whole of the protected line, but also for some faults within the next line section
- If the signaling channel is taken out of service, the relay will operate in the conventional basic mode
- A current reversal guard timer is included in the signal send logic to prevent unwanted trips of the relay on the healthy circuit, during current reversal situations on a parallel circuit

Figure 40 shows the simplified scheme logic.

Send logic: Reverse Zone 4

Trip logic: Zone 2, plus Channel **NOT** Received, delayed by Tp

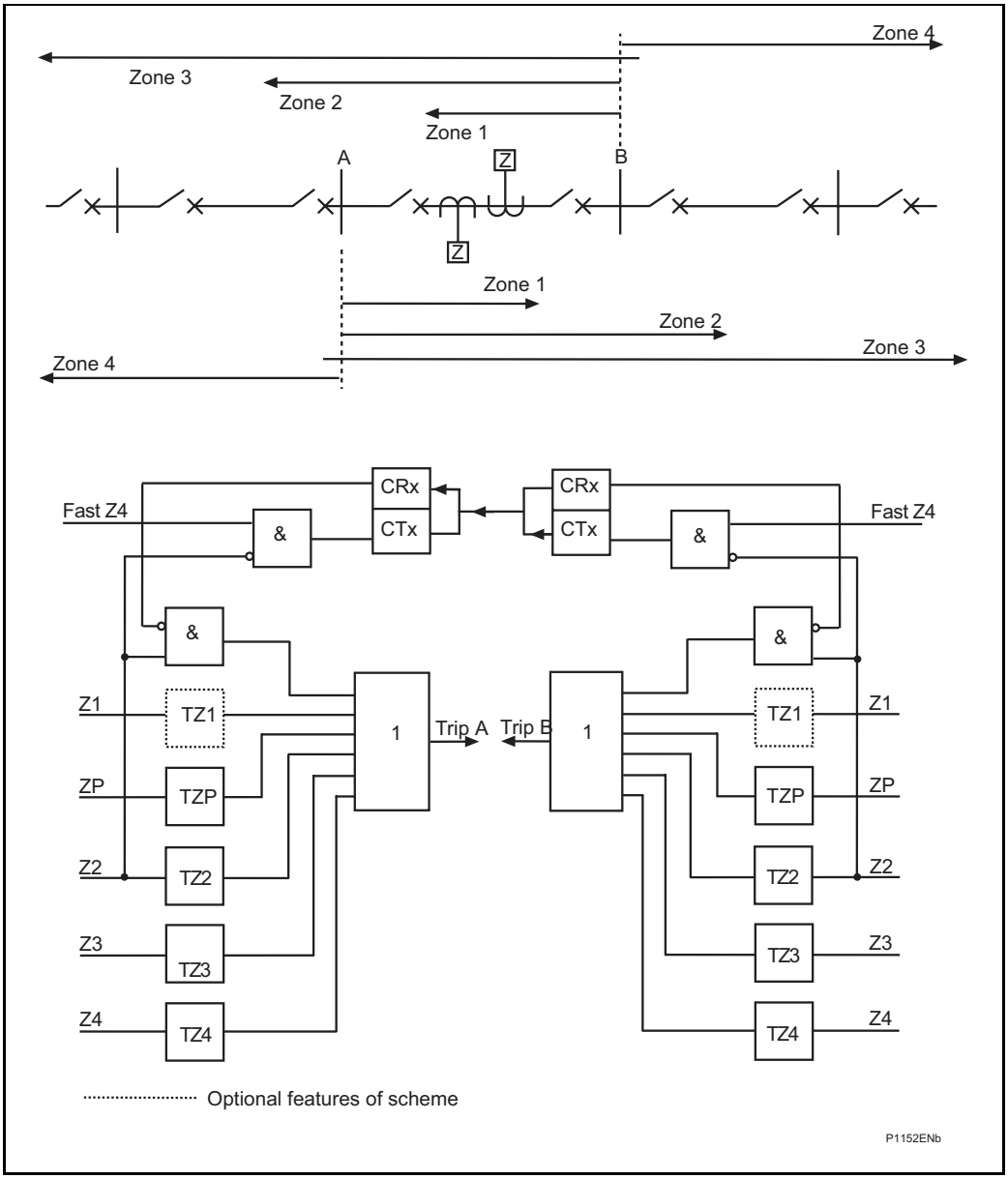

Figure 40 Distance blocking scheme (BOP) (Distance option only)

1.23.7 Distance schemes current reversal guard logic (Distance option only)

For double circuit lines, the fault current direction can change in one circuit when circuit breakers open sequentially to clear the fault on the parallel circuit. The change in current direction causes the overreaching distance elements to see the fault in the opposite direction to the direction in which the fault was initially detected (settings of these elements exceed 150% of the line impedance at each terminal). The race between operation and resetting of the overreaching distance elements at each line terminal can cause the Permissive Overreach, and Blocking schemes to trip the healthy line. A system configuration that could result in current reversals is shown in Figure 41. For a fault on line L1 close to circuit breaker B, as circuit breaker B trips it causes the direction of current flow in line L2 to reverse.

OP

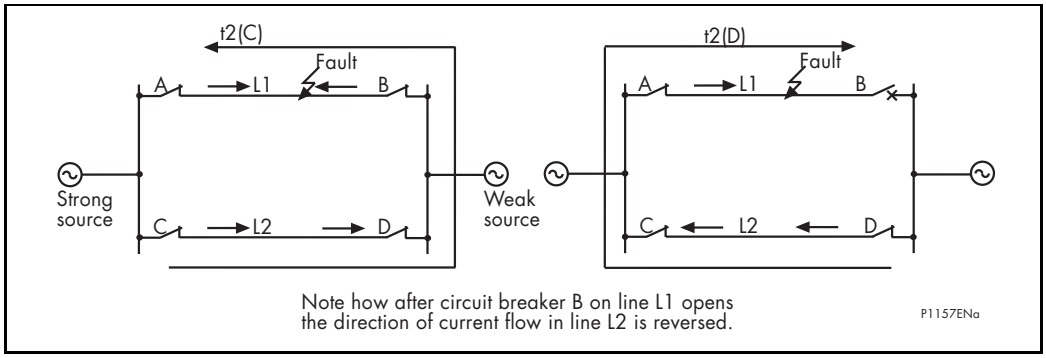

Figure 41 Example of fault current reverse of direction

1.23.8 Permissive overreach schemes current reversal guard (Distance option only)

The current reversal guard incorporated in the POR scheme logic is initiated when the reverse looking Zone 4 elements operate on a healthy line. Once the reverse looking Zone 4 elements have operated, the relay's permissive trip logic and signal send logic are inhibited at substation D. The reset of the current reversal guard timer is initiated when the reverse looking Zone 4 resets. A time delay tREVERSAL GUARD is required in case the overreaching trip element at end D operates before the signal send from the relay at end C has reset. Otherwise this would cause the relay at D to over trip. Permissive tripping for the relays at D and C substations is enabled again, once the faulted line is isolated and the current reversal guard time has expired.

OP

1.23.9 Blocking scheme 1 and 2 current reversal guard (Distance option only)

The current reversal guard incorporated in the BLOCKING scheme logic is initiated when a blocking element picks-up to inhibit the channel-aided trip. When the current reverses and the reverse looking Zone 4 elements reset, the blocking signal is maintained by the timer tREVERSAL GUARD. Therefore, the relays in the healthy line are prevented from over tripping due to the sequential opening of the circuit breakers in the faulted line. After the faulted line is isolated, the reverse-looking Zone 4 elements at substation C and the forward looking elements at substation D will reset.

Two variants of Blocking scheme exist, BLOCKING 1, and BLOCKING 2. The only difference in functionality is:

- BLOCKING 1 - The Reversal Guard is applied to the Signal Send
- BLOCKING 2 - The Reversal Guard is applied to the Signal Receive

The difference in the receive logic is shown in Logic Diagrams, Figure 42 and Figure 43 below:

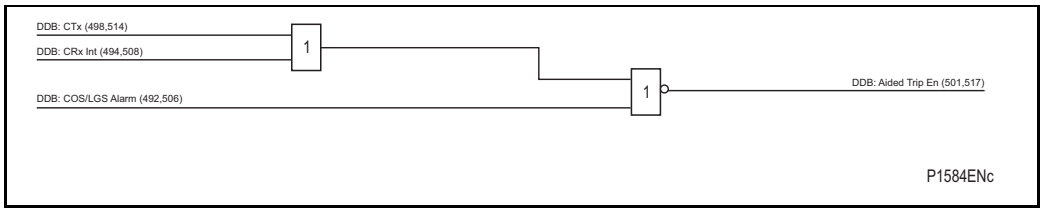

Figure 42 Blocking 1 (Distance option only)

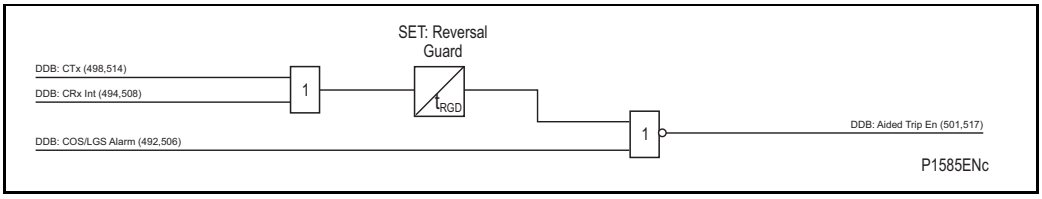

Figure 43 Blocking 2 (Distance option only)

The relative merits of Blocking 1 and Blocking 2 are discussed in the Application Notes.

1.23.10 Aided DEF ground fault scheme - permissive overreach (Distance option only)

Figure 44 shows the element reaches, and Figure 45 the simplified scheme logic. The signaling channel is keyed from operation of the forward IN> DEF element of the relay. If the remote relay has also detected a forward fault, then it will operate with no additional delay upon receipt of this signal.

Send logic: IN> Forward pickup

Permissive trip logic: IN> Forward plus Channel Received

OP

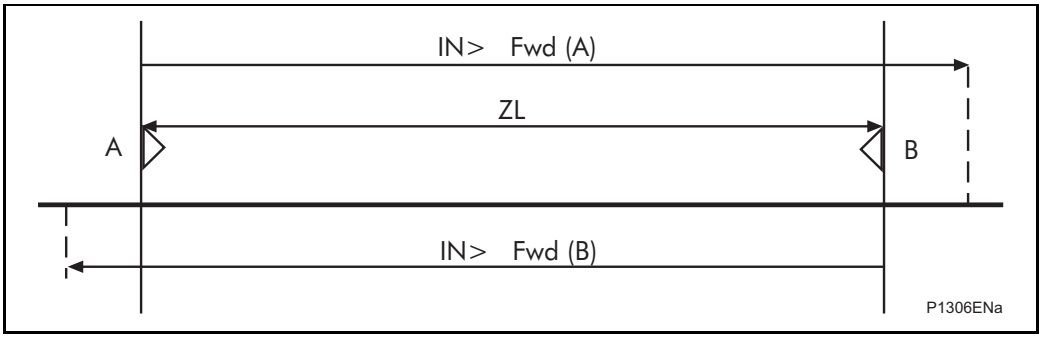

Figure 44 The DEF permissive scheme (Distance option only)

The scheme has the same features/requirements as the corresponding distance scheme and provides sensitive protection for high resistance earth faults.

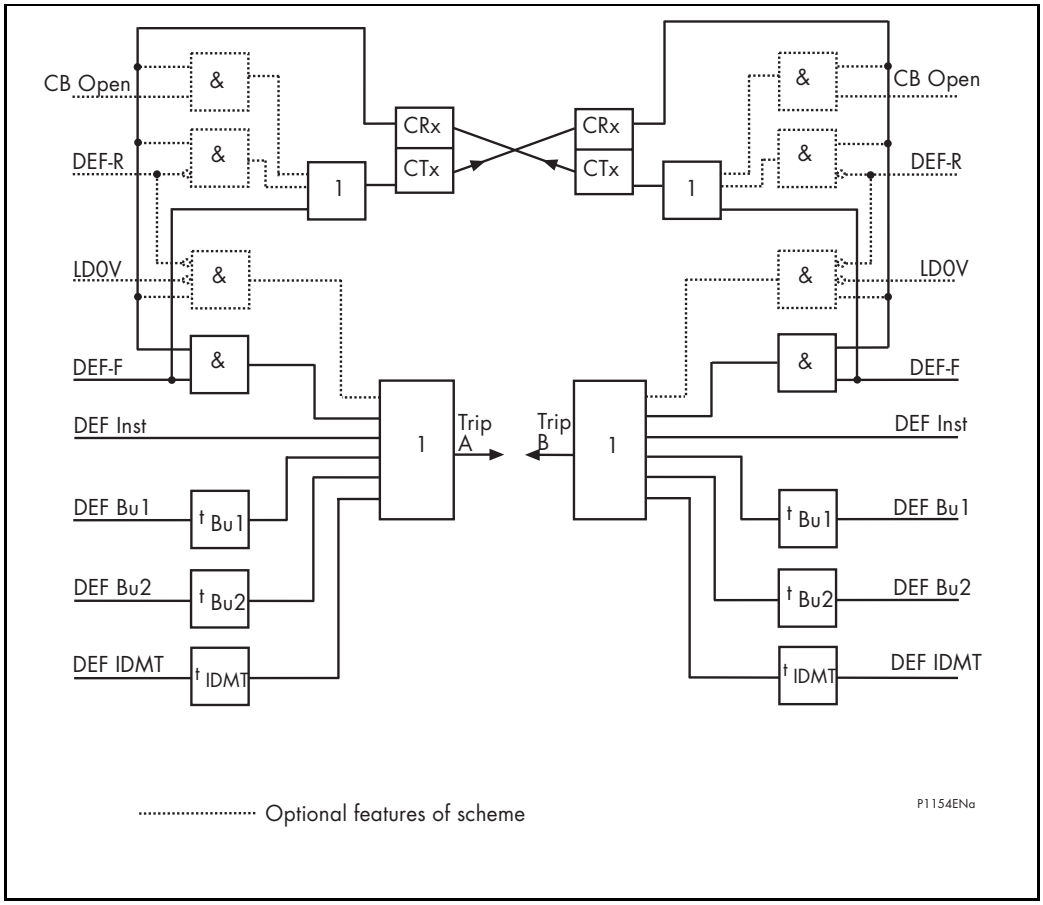

Figure 45 Aided DEF (ground) permissive scheme logic (Distance option only)

1.23.11 Aided DEF ground fault scheme – blocking (Distance option only)

Figure 45 shows the element reaches, and Figure 46 the simplified scheme logic. The signaling channel is keyed from operation of the reverse DEF element of the relay. If the remote relay forward IN> element has picked up, then it will operate after the set Time Delay if no block is received.

Send logic: DEF Reverse

Trip logic: IN> Forward, plus Channel NOT Received, with small set delay

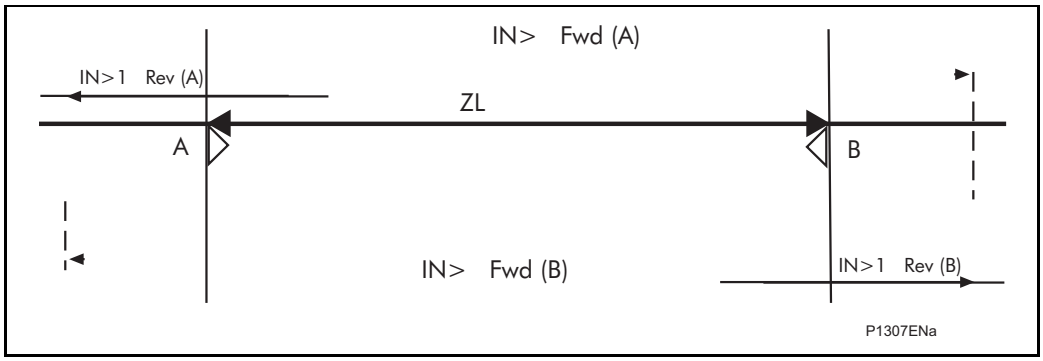

Figure 46 The DEF blocking scheme (Distance option only)

OP

The scheme has the same features/requirements as the corresponding distance scheme and provides sensitive protection for high resistance earth faults.

Where **t** is shown in the diagram this signifies the time delay associated with an element. To allow time for a blocking signal to arrive, a short time delay on aided tripping must be used.

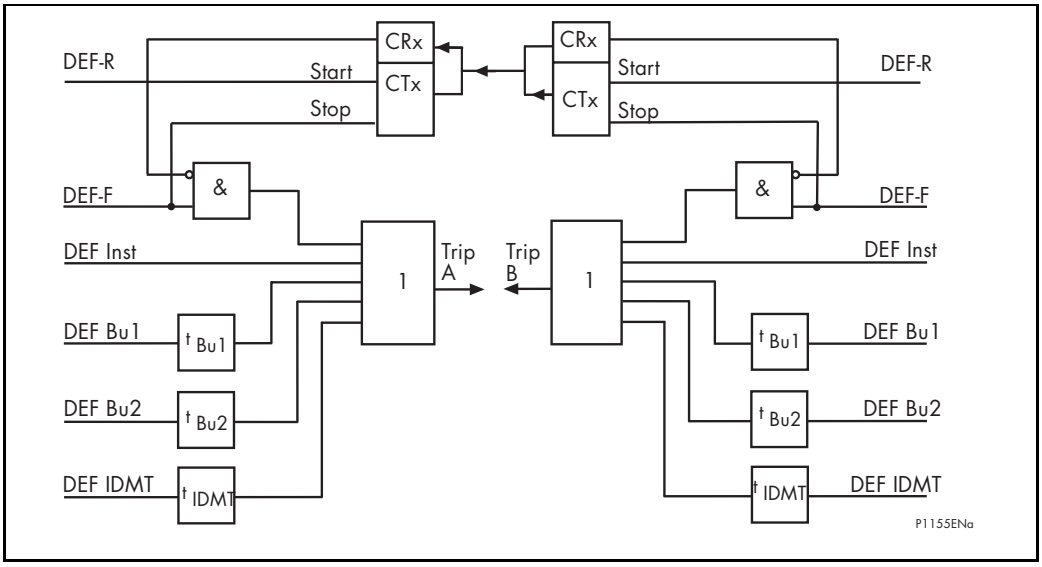

Figure 47 Aided DEF (ground) blocking scheme logic (Distance option only)

1.23.12 Delta scheme POR - permissive overreach transfer trip (Distance option only)

The channel for a directional comparison POR scheme is keyed by operation of the overreaching **Delta Forward** elements of the relay. If the remote relay has also detected a forward fault upon receipt of this signal, the relay will operate. Listed below are some of the main features/requirements for a permissive overreaching scheme:

- Permissive overreach schemes tend to be more secure than blocking schemes because forward directional decisions must be made at both ends of the line before tripping is allowed. Failure of the signaling channel will not result in unwanted tripping.
- If the infeed source at either end of the line is weak, the POR scheme must be supplemented with Weak Infeed logic.
- The scheme requires a duplex signaling channel to prevent possible relay maloperation due to spurious keying of the signaling equipment. This is necessary due to the fact that the signaling channel is keyed for faults external to the protected line.
- Current reversal guard logic is used to prevent healthy line protection maloperation for the high speed current reversals experienced in double circuit lines, caused by sequential opening of circuit breakers.
- If the signaling channel fails, Basic distance scheme tripping will be available.

This scheme is similar to that used in the LFDC relay, and is shown in Figure 48.

Send logic:	Δ Fault Forward
Permissive trip logic:	Δ Fault Forward plus Channel Received.

OP

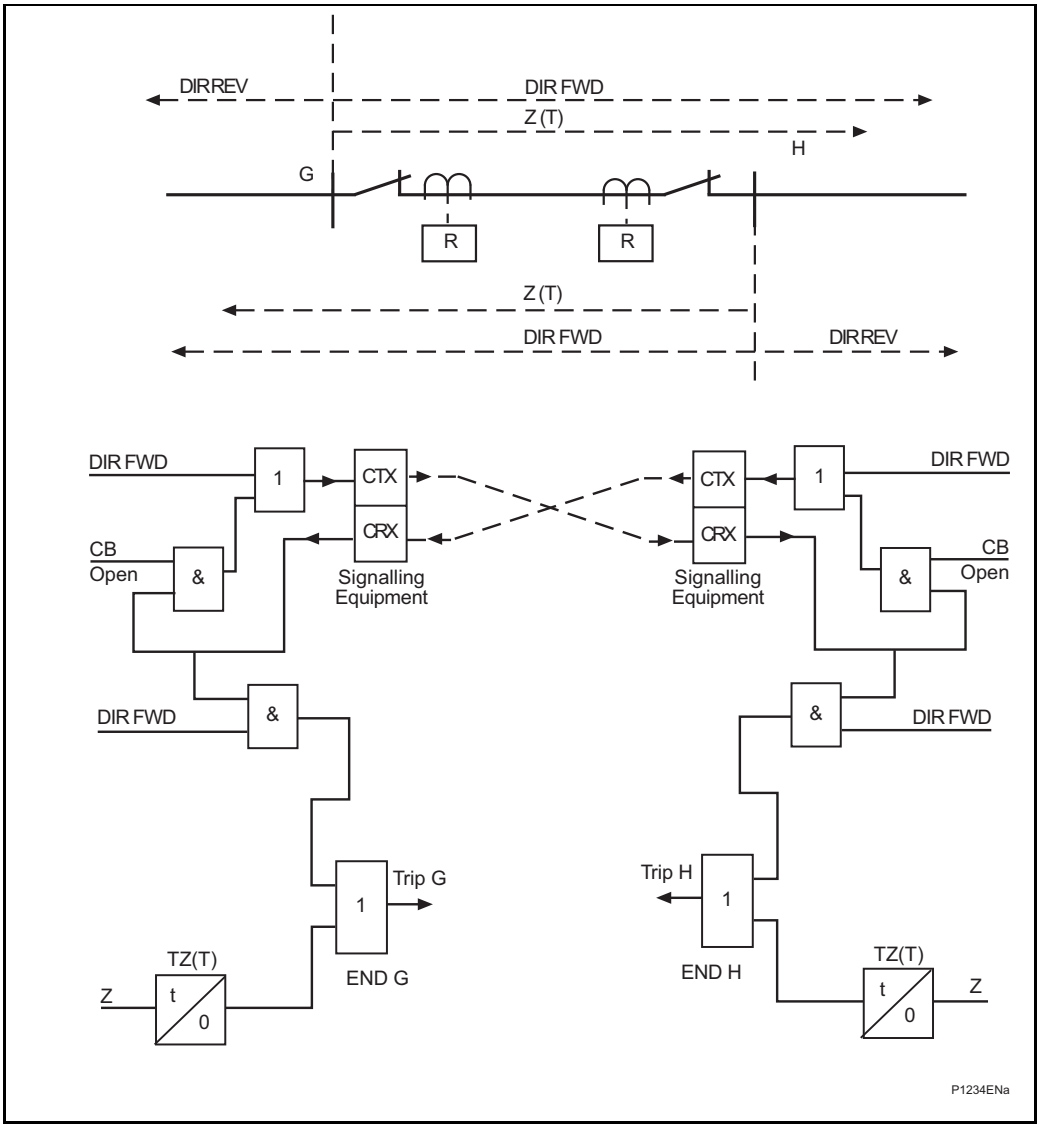

Figure 48 Delta directional comparison POR scheme (Distance option only)

1.23.13 Delta blocking scheme (Distance option only)

The signaling channel is keyed from operation of the **Delta Reverse** elements of the relay. If the remote relay has detected **Delta Forward**, then it will operate after the trip delay if no block is received. Listed below are some of the main features/requirements for a permissive overreaching scheme:

- BLOCKING schemes require only a simplex signaling channel.
- The blocking signal is transmitted over a healthy line, and so there are no problems associated with power line carrier signaling equipment.
- Delta blocking schemes tend to be less secure than permissive schemes because failure of the signaling channel could result in an unwanted tripping later. Therefore blocking schemes are best supervised by use of a **Channel out of Service** indication.
- Fast tripping will occur at a strong source line end, for faults along the protected line section, even if there is weak or zero infeed at the other end of the protected line.
- If a line terminal is open, fast tripping will still occur for faults along the whole of the protected line length.

OP

- A current reversal guard timer is included in the signal send logic to prevent unwanted trips of the relay on the healthy circuit, during current reversal situations on a parallel circuit.
- To allow time for a blocking signal to arrive, a short time delay on aided tripping, **Delta dly**, must be used.

This scheme is similar to that used in the LFDC relay, and is shown in Figure 49.

Send logic: Δ Fault Reverse

Trip logic: Δ Fault Forward, plus Channel NOT Recieved, delayed by Tp.

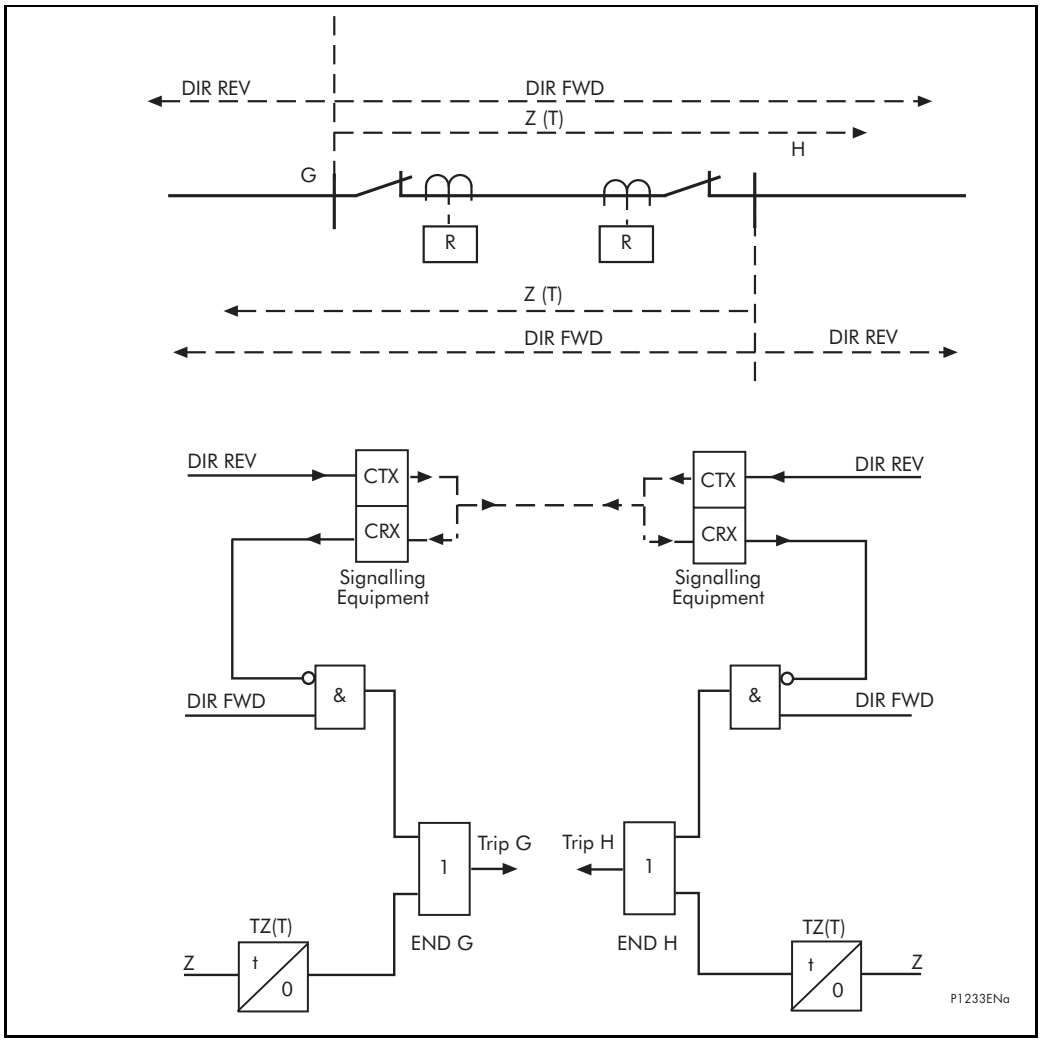

Figure 49 delta directional comparison BLOCKING scheme

1.24 Zone 1 extension and loss of load schemes (Distance option only)

The MiCOM P54x offers additional non-channel distance schemes, notably Zone 1 extension, and loss of load.

OP

1.24.1 Zone 1 extension scheme (Distance option only)

Auto-reclosure is widely used on radial overhead line circuits to re-establish supply following a transient fault. A Zone 1 extension scheme may therefore be applied to a radial overhead feeder to provide high speed protection for transient faults along the whole of the protected line. Figure 50 shows the alternative reach selections for zone 1: Z1 or the extended reach Z1X.

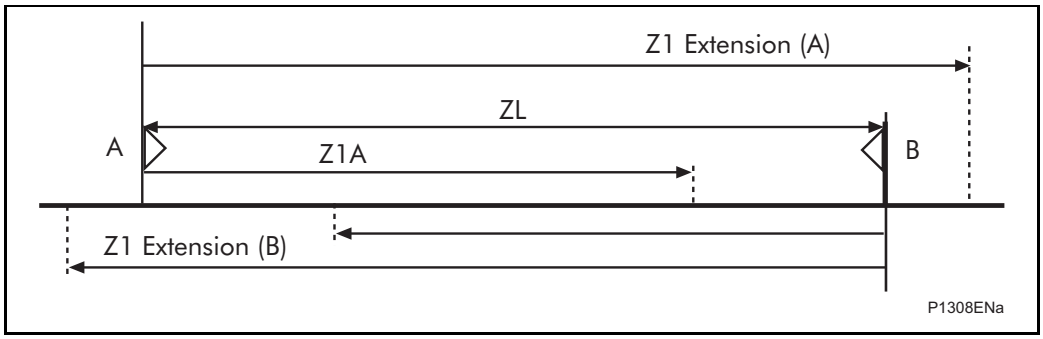

Figure 50 Zone 1 extension scheme

In this scheme, Zone 1X is enabled and set to overreach the protected line. A fault on the line, including one in the end 20% not covered by zone 1, will now result in instantaneous tripping followed by auto-reclosure. Zone 1X has resistive reaches and residual compensation similar to Zone 1. The auto-recloser in the relay is used to inhibit tripping from zone 1X such that upon reclosure the relay will operate with Basic scheme logic only, to co-ordinate with downstream protection for permanent faults. Therefore, transient faults on the line will be cleared instantaneously, which will reduce the probability of a transient fault becoming permanent. The scheme can, however, operate for some faults on an adjacent line, although this will be followed by auto-reclosure with correct protection discrimination. Increased circuit breaker operations would occur, together with transient loss of supply to a substation.

OP

The time delays associated with extended zone Z1X are shown in the table below:

Scenario	Z1X time delay
First fault trip	= tZ1
Fault trip for persistent fault on auto-reclose	= tZ2

The Zone 1X reach is set as a percentage of the Zone 1 reach, i.e. as a reach multiplier.

The Zone 1 extension scheme can be **Disabled**, permanently **Enabled** or just brought into service when the distance communication channel fails and the aided scheme would be inoperative. A selection of which out of the two channels available in the MiCOM P54x is monitored, is provided, with selections from Channel 1 and Channel 2 in any combination. The Logic Diagram is shown in Figure 51 below:

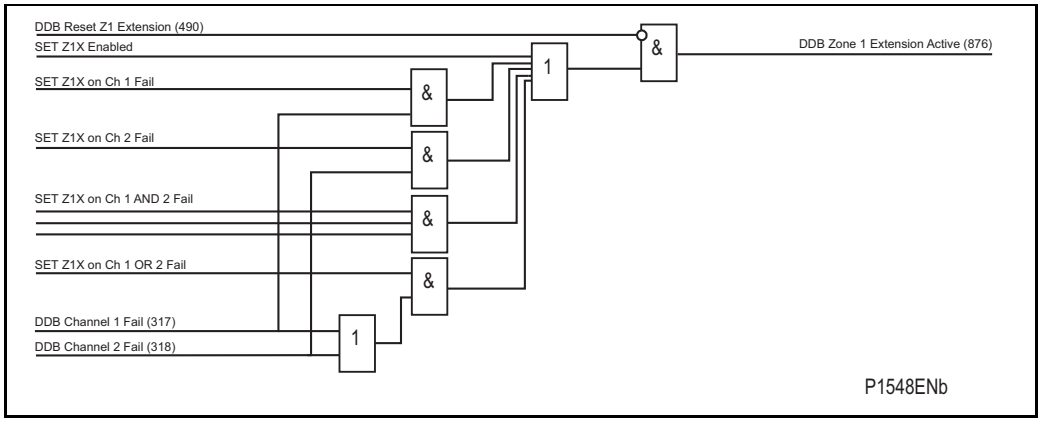

Figure 51 Zone 1 extension

1.24.2 Loss of load accelerated tripping (LoL) (Distance option only)

OP

The loss of load accelerated trip logic is shown in abbreviated form in Figure 52. The loss of load logic provides fast fault clearance for faults over the whole of a double end fed protected circuit for all types of fault, except three phase. The scheme has the advantage of not requiring a signaling channel. Alternatively, the logic can be chosen to be enabled when the channel associated with an aided scheme has failed. This failure is detected by permissive scheme unblocking logic, or a Channel Out of Service (COS) opto input. A selection of which out of the two channels available in the MiCOM P54x is monitored, is provided, with selections from Channel 1 and Channel 2 in any combination.

Any fault located within the reach of Zone 1 will result in fast tripping of the local circuit breaker. For an end zone fault with remote infeed, the remote breaker will be tripped in Zone 1 by the remote relay and the local relay can recognize this by detecting the loss of load current in the healthy phases. This, coupled with operation of a Zone 2 comparator causes tripping of the local circuit breaker.

Before an accelerated trip can occur, load current must have been detected prior to the fault. The loss of load current opens a window during which time a trip will occur if a Zone 2 comparator operates. A typical setting for this window is 40 ms as shown in Figure 52, although this can be altered in the menu **LoL Window** cell. The accelerated trip is delayed by 18 ms to prevent initiation of a loss of load trip due to circuit breaker pole discrepancy occurring for clearance of an external fault. The local fault clearance time can be deduced as follows:

t = Z1d + 2CB + LDr + 18ms

Where:

Z1d = Maximum downstream zone 1 trip time

CB = Breaker operating time

LDr = Upstream level detector (LoL: I<) reset time

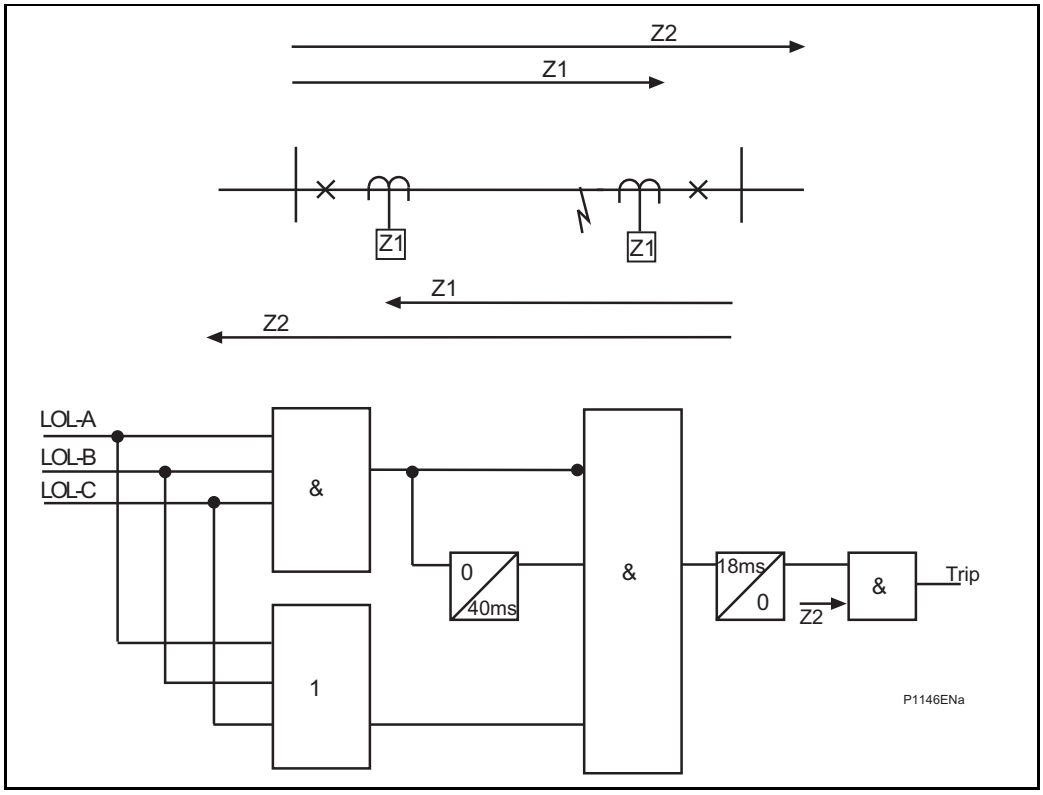

Figure 52 Loss of load accelerated trip scheme (Distance option only)

For circuits with load tapped off the protected line, care must be taken in setting the loss of load feature to ensure that the I< level detector setting is above the tapped load current. When selected, the loss of load feature operates in conjunction with the main distance scheme that is selected. In this way it provides high speed clearance for end zone faults when the Basic scheme is selected or, with permissive signal aided tripping schemes, it provides high speed back-up clearance for end zone faults if the channel fails.

Note: Loss of load tripping is only available where 3 pole tripping is used. The detailed Logic Diagram is shown in Figure 53.

OP

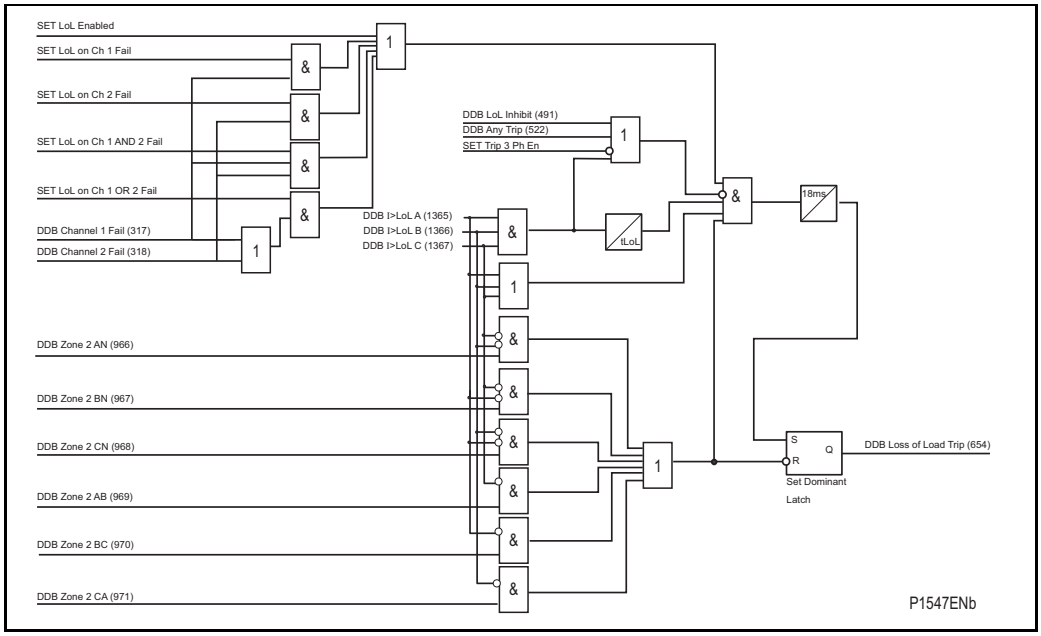

Figure 53 Loss of load (Distance option only)

OP

1.25 Phase fault overcurrent protection

Phase fault overcurrent protection is provided as a form of back-up protection that could be:

- Permanently disabled
- Permanently enabled
- Enabled only in case of VT fuse/MCB failure
- Enabled only in case of protection communication channel failure
- Enabled if VT fuse/MCB or protection communication channel fail
- Enabled if VT fuse/MCB and protection communication channel fail

In addition, each stage may be disabled by a DDB (463,464,465 or 466) **Inhibit I > x** (x = 1, 2, 3 or 4)

It should be noted that phase overcurrent protection is phase segregated, but the operation of any phase is mapped to 3 phase tripping in the default PSL.

The VTS element of the relay can be selected to either block the directional element or simply remove the directional control.

The first two stages can be set either inverse time or definite time only. The third and fourth stages have a DT characteristic only. Each stage can be configured to be directional forward, directional reverse or non-directional.

For the IDMT characteristics the following options are available.

The IEC/UK IDMT curves conform to the following formula:

$$t = T \times \left(\frac{\beta}{(I/Is)^{\alpha} - 1} + L \right)$$

The IEEE/US IDMT curves conform to the following formula:

$$t = TD \times \left(\frac{\beta}{(I/Is)^{\alpha} - 1} + L \right)$$

t = Operation time

β = Constant

I = Measured current

Is = Current threshold setting

α = Constant

L = ANSI/IEEE constant (zero for IEC curves)

T = Time multiplier setting for IEC/UK curves

TD = Time multiplier setting for IEEE/US curves

IDMT curve description	Standard	β Constant	α Constant	L Constant
Standard Inverse	IEC	0.14	0.02	0
Very Inverse	IEC	13.5	1	0
Extremely Inverse	IEC	80	2	0
Long Time Inverse	UK	120	1	0
Moderately Inverse	IEEE	0.0515	0.02	0.114
Very Inverse	IEEE	19.61	2	0.491
Extremely Inverse	IEEE	28.2	2	0.1217
Inverse	US-C08	5.95	2	0.18
Short Time Inverse	US	0.16758	0.02	0.11858

Note: The IEEE and US curves are set differently to the IEC/UK curves, with regard to the time setting. A time multiplier setting (TMS) is used to adjust the operating time of the IEC curves, whereas a time dial setting is employed for the IEEE/US curves. The menu is arranged such that if an IEC/UK curve is selected, the 'I> Time Dial' cell is not visible and vice versa for the TMS setting.

OP

1.25.1 Reset characteristics for overcurrent elements

The IEC/UK inverse characteristics can be used with a definite time reset characteristic, however, the IEEE/US curves may have an inverse or definite time reset characteristic. The following equation can used to calculate the inverse reset time for IEEE/US curves:

$$tRESET = \frac{TD \times S}{(1 - M^2)} \text{ in seconds}$$

Where:

TD = Time dial setting for IEEE curves

S = Constant

M = I/Is

Curve description	Standard	S constant
Moderately Inverse	IEEE	4.85
Very Inverse	IEEE	21.6
Extremely Inverse	IEEE	29.1
Inverse	US	5.95
Short Time Inverse	US	2.261

1.25.2 Directional overcurrent protection

The phase fault elements of the MiCOM P54x relays are internally polarized by the quadrature phase-phase voltages, as shown in the table below:

Phase of protection	Operate current	Polarizing voltage
A Phase	IA	VBC
B Phase	IB	VCA
C Phase	IC	VAB

Under system fault conditions, the fault current vector will lag its nominal phase voltage by an angle dependent upon the system X/R ratio. It is therefore a requirement that the relay operates with maximum sensitivity for currents lying in this region. This is achieved by means of the relay characteristic angle (RCA) setting; this defines the angle by which the current applied to the relay must be displaced from the voltage applied to the relay to obtain maximum relay sensitivity. This is set in cell **I>Char Angle** in the overcurrent menu. On the MiCOM P54x relays, it is possible to set characteristic angles anywhere in the range –95° to +95°.

The functional logic block diagram for directional overcurrent is shown overleaf.

The overcurrent block is a level detector that detects that the current magnitude is above the threshold and together with the respective polarizing voltage, a directional check is performed based on the following criteria:

Directional forward

-90° < (angle(I) - angle(V) - RCA) < 90°

Directional reverse

-90° > (angle(I) - angle(V) - RCA) > 90°

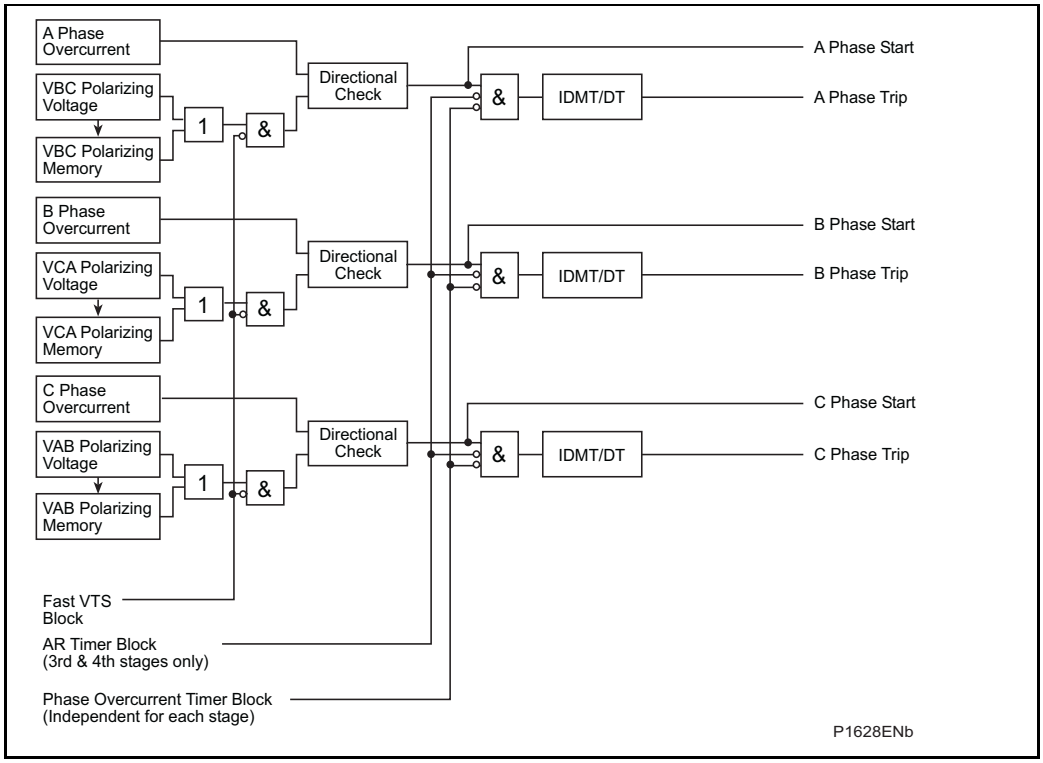

Figure 54 Directional overcurrent logic

Any of the four overcurrent stages may be configured to be directional noting that IDMT characteristics are only selectable on the first two stages. When the element is selected as directional, a VTS Block option is available. When the relevant bit is set to 1, operation of the Voltage Transformer Supervision (VTS), will block the stage if directionalized. When set to 0, the stage will revert to non-directional upon operation of the VTS.

1.26 Synchronous polarization

For a close up three-phase fault, all three voltages will collapse to zero and no healthy phase voltages will be present. For this reason, the MiCOM P54x relays include a synchronous polarization feature that stores the pre-fault voltage information and continues to apply it to the directional overcurrent elements for a time period of 3.2 seconds. This ensures that either instantaneous or time delayed directional overcurrent elements will be allowed to operate, even with a three-phase voltage collapse.

1.27 Thermal overload protection

The relay incorporates a current based thermal replica, using rms load current to model heating and cooling of the protected plant. The element can be set with both alarm and trip stages.

The heat generated within an item of plant, such as a cable or a transformer, is the resistive loss (I2R x t). Therefore, heating is directly proportional to current squared. The thermal time characteristic used in the relay is therefore based on current squared, integrated over time. The relay automatically uses the largest phase current for input to the thermal model.

Equipment is designed to operate continuously at a temperature corresponding to its full load rating, where heat generated is balanced with heat dissipated by radiation etc.
Over-temperature conditions therefore occur when currents in excess of rating are allowed to flow for a period of time. It can be shown that temperatures during heating follow exponential time constants and a similar exponential decrease of temperature occurs during cooling.

The relay provides two characteristics that may be selected according to the application.

Thermal overload protection may be disabled by DDB 478 **Inhibit Thermal >** .

OP

1.27.1 Single time constant characteristic

This characteristic is used to protect cables, dry type transformers (e.g. type AN), and capacitor banks.

The thermal time characteristic is given by:

$$t = -\tau \log_e \left(\frac{I^2 - (K.I_{FLC})^2}{(I^2 - Ip^2)} \right)$$

Where:

t = Time to trip, following application of the overload current, I;

τ = Heating and cooling time constant of the protected plant;

I = Largest phase current;

IFLC = Full load current rating (relay setting 'Thermal Trip');

k = 1.05 constant, allows continuous operation up to <1.05 IFLC;

IP = Steady state pre-loading before application of the overload.

OP

The time to trip varies depending on the load current carried before application of the overload, i.e. whether the overload was applied from 'hot" or "cold".

The thermal time constant characteristic may be rewritten as:

$$e^{(-t/\tau)} = \left(\frac{\theta - \theta p}{\theta - 1} \right)$$

Where:

θ = I2/k2 IFLC2

and

θp = Ip2/k2 IFLC2

Where θ is the thermal state and is θp the pre-fault thermal state.

Note: A current of 105%Is (kIFLC) has to be applied for several time constants to cause a thermal state measurement of 100%.

1.27.2 Dual time constant characteristic (typically not applied for MiCOM P54x)

This characteristic is used to protect oil-filled transformers with natural air cooling (e.g. type ONAN). The thermal model is similar to that with the single time constant, except that two timer constants must be set.

For marginal overloading, heat will flow from the windings into the bulk of the insulating oil. Therefore, at low current, the replica curve is dominated by the long time constant for the oil. This provides protection against a general rise in oil temperature.

For severe overloading, heat accumulates in the transformer windings, with little opportunity for dissipation into the surrounding insulating oil. Therefore, at high current, the replica curve is dominated by the short time constant for the windings. This provides protection against hot spots developing within the transformer windings.

Overall, the dual time constant characteristic provided within the relay serves to protect the winding insulation from ageing, and to minimize gas production by overheated oil.

Note: The thermal model does not compensate for the effects of ambient temperature change.

The thermal curve is defined as:

$$0.4e^{(-t/\tau)} + 0.6e^{(-t/\tau)} = \frac{I^2 - (k.IFLC)^2}{I^2 - Ip^2}$$

Where:

$\tau 1$ = Heating and cooling time constant of the transformer windings;

$\tau 2$ = Heating and cooling time constant for the insulating oil.

In practice, it is difficult to solve this equation to give the operating time (t), therefore a graphical solution, using a spreadsheet package, is recommended. The spreadsheet can be arranged to calculate the current that will give a chosen operating time. The equation to calculate the current is defined as:

$$I = \sqrt{\frac{0.4Ip^2.e^{(-t/\tau 1)} + 0.6Ip^2.e^{(-t/\tau 2)} - k^2.I_{FLC}^2}{0.4\,e^{(-t/\tau 1)} + 0.6\,e^{(-t/\tau 2)} - 1}} \quad \text{…….. Equation 1}$$

OP

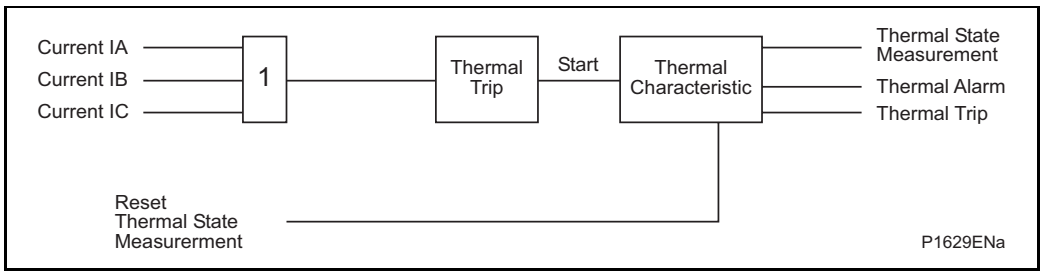

Figure 55 Thermal overload protection logic diagram

The functional block diagram for the thermal overload protection is shown in Figure 55.

The magnitudes of the three phase input currents are compared and the largest magnitude taken as the input to the thermal overload function. If this current exceeds the thermal trip threshold setting a start condition is asserted.

1.28 Earth fault (ground overcurrent) and sensitive earth fault (SEF) protection

The P54x relays include backup earth fault protection. Two elements are available; a derived earth fault element (where the residual current to operate the element is derived from the addition of the three line CT currents) and a sensitive earth fault element where low current settings are required. The sensitive earth fault element has a separate CT input and would normally be connected to a core balance CT. The derived and sensitive earth fault elements both have four stages of protection. The first two stages can be set either inverse time or definite time only. The third and fourth stages have a DT characteristic only. Each stage can be configured to be directional forward, directional reverse or non-directional.

A feature also exists whereby the protection can be enabled upon failure of the differential protection communication channel (not applicable to sensitive earth fault). Earth fault Overcurrent IN> can be set to:

- Permanently disabled
- Permanently enabled
- Enabled only in case of VT fuse/MCB failure
- Enabled only in case of protection communication channel failure
- Enabled if VT fuse/MCB or protection communication channel fail
- Enabled if VT fuse/MCB and protection communication channel fail

In addition, each stage (not for SEF) may be disabled by a DDB (467,468,469 and 470) **Inhibit IN > x** (x = 1, 2, 3 or 4).

The VTS element of the relay can be selected to either block the directional element or simply remove the directional control.

The IN> and ISEF> Function Links settings have the following effect:

VTS Block - When the relevant is set to 1, operation of the Voltage Transformer Supervision (VTS) will block the stage if it directionalized. When set to 0 the stage will revert to non-directional upon operation of the VTS.

The inverse time characteristics available for the earth fault protection are the same as those for the phase overcurrent elements, but with the addition of an IDG curve characteristic.

Details of the IDG curve are provided below:

1.28.1 IDG curve

The IDG curve is commonly used for time delayed earth fault protection in the Swedish market. This curve is available in stages 1 and 2 of Earth Fault and Sensitive Earth Fault protections.

The IDG curve is represented by the following equation:

$$t = 5.8 - 1.35 \log_e \left(\frac{I}{IN > Setting} \right) \text{ in seconds}$$

Where:

I = Measured current

IN>Setting = An adjustable setting which defines the start point of the characteristic

Although the start point of the characteristic is defined by the **IN>** setting, the actual relay current threshold is a different setting called “IDG Is”. The **IDG Is** setting is set as a multiple of **IN>**.

An additional setting **IDG Time** is also used to set the minimum operating time at high levels of fault current.

Figure 56 – illustrates how the IDG characteristic is implemented.

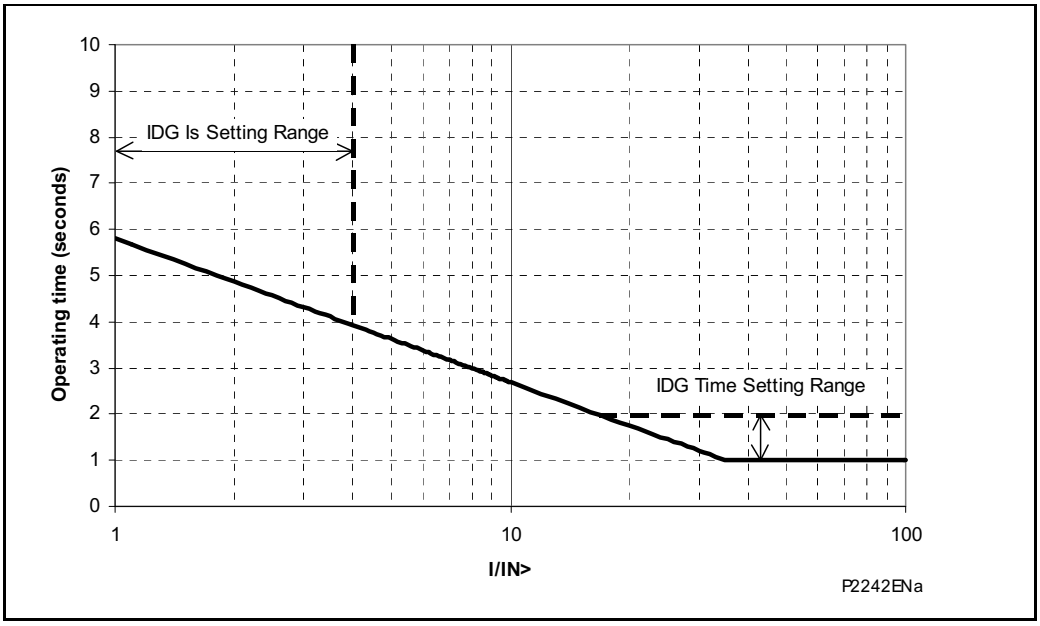

Figure 56 IDG characteristic

OP

1.29 Directional earth fault protection

As stated in the previous sections, each of the four stages of earth fault protection may be set to directional if required. Consequently, as with the application of directional overcurrent protection, a suitable voltage supply is required by the relay to provide the necessary polarization. Two options are available for polarization; Residual Voltage or Negative Sequence.

1.30 Residual voltage polarization

With earth fault protection, the polarizing signal requires to be representative of the earth fault condition. As residual voltage is generated during earth fault conditions, this quantity is commonly used to polarize DEF elements. The relay internally derives this voltage from the 3 phase voltage input which must be supplied from either a 5-limb or three single phase VTs. These types of VT design allow the passage of residual flux and consequently permit the relay to derive the required residual voltage. In addition, the primary star point of the VT must be earthed. A three-limb VT has no path for residual flux and is therefore unsuitable to supply the relay.

Note: Residual voltage is nominally 180° out of phase with residual current. Consequently, the DEF relays are polarized from the '-Vres' quantity. This 180° phase shift is automatically introduced within the relay.

The directional criteria with zero sequence (residual voltage) polarization are given below:

Directional forward

$-90^{o} < (\text{angle}(IN) - \text{angle}(VN+180^{o}) - RCA) < 90^{o}$

Directional reverse

$-90^{o} > (\text{angle}(IN) - \text{angle}(VN+180^{o}) - RCA) > 90^{o}$

The *virtual current polarizing* feature is not available for use with the backup earth fault elements - that is used exclusively in DEF aided schemes only.

The logic diagram for directional earth fault overcurrent with neutral voltage polarization is shown overleaf.

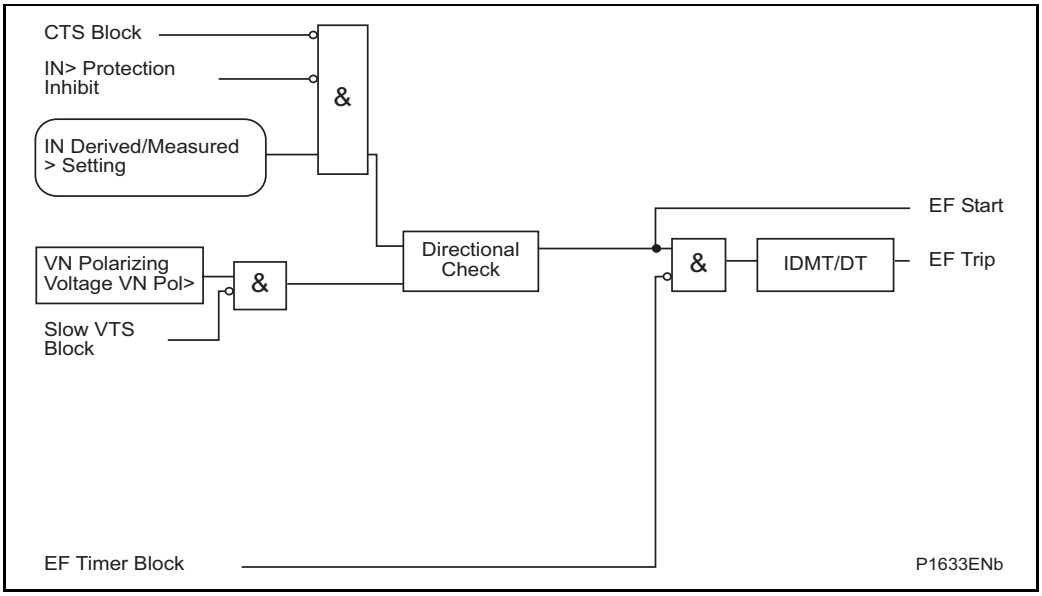

Figure 57 Directional EF with neutral voltage polarization (single stage)

OP

1.30.1 Negative sequence polarization (Not for SEF)

In certain applications, the use of residual voltage polarization of DEF may either be not possible to achieve, or problematic. An example of the former case would be where a suitable type of VT was unavailable, for example if only a three limb VT was fitted. An example of the latter case would be an HV/EHV parallel line application where problems with zero sequence mutual coupling may exist.

In either of these situations, the problem may be solved by the use of negative phase sequence (nps) quantities for polarization. This method determines the fault direction by comparison of nps voltage with nps current. The operate quantity, however, is still residual current.

It requires a suitable voltage and current threshold to be set in cells **IN>V2pol set** and **IN>I2pol set**, respectively.

Negative sequence polarizing is not recommended for impedance earthed systems regardless of the type of VT feeding the relay. This is due to the reduced earth fault current limiting the voltage drop across the negative sequence source impedance (V2pol) to negligible levels. If this voltage is less than 0.5 volts the relay will cease to provide DEF.

The logic diagram for directional earth fault overcurrent with negative sequence polarization is shown in Figure 58.

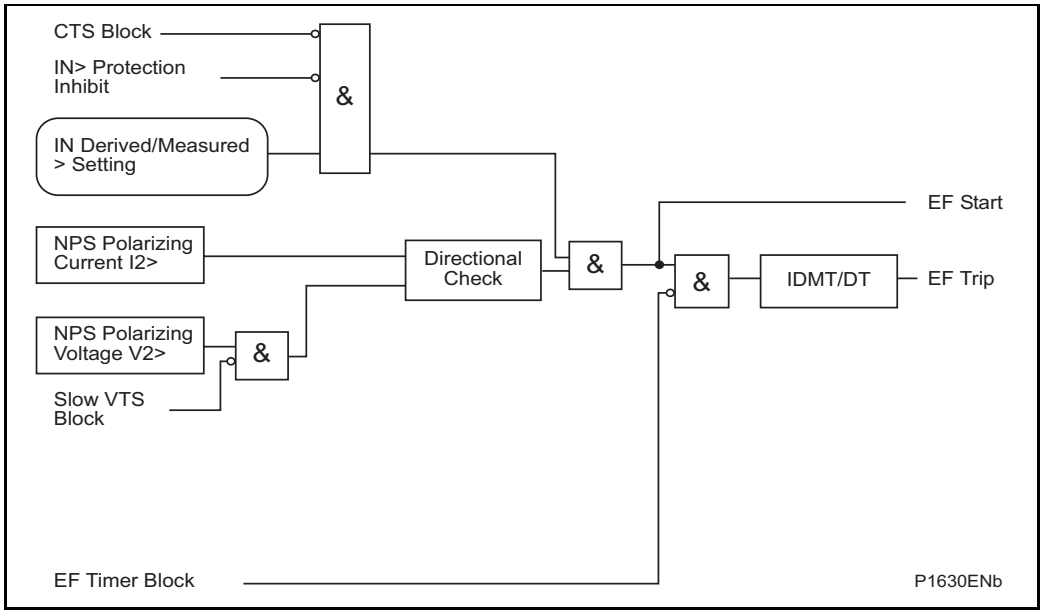

Figure 58 Directional EF with negative sequence polarization (single stage)

OP

The directional criteria with negative sequence polarization is given below:

Directional forward

-90° < (angle(I2) - angle(V2 + 180°) - RCA) < 90°

Directional reverse

-90° > (angle(I2) - angle(V2 + 180°) - RCA) > 90°

1.31 Negative sequence overcurrent protection (NPS)

The negative phase sequence overcurrent protection included in the P54x relays provides four-stage non-directional/ directional overcurrent protection with independent time delay characteristics. The first two stages of overcurrent protection have time-delayed characteristics which are selectable between inverse definite minimum time (IDMT), or definite time (DT). The third and fourth stages have definite time characteristics only. The inverse time delayed characteristics support both IEC and IEEE curves and please refer to section 1.25 for a detailed description. The user may choose to directionalize operation of the elements, for either forward or reverse fault protection for which a suitable relay characteristic angle may be set. Alternatively, the elements may be set as non-directional.

For the negative phase sequence directional elements to operate, the relay must detect a polarizing voltage above a minimum threshold, **I2> V2pol Set**. When the element is selected as directional, a VTS Block option is available. When the relevant bit is set to 1, operation of the Voltage Transformer Supervision (VTS), will block the stage if directionalized. When set to 0, the stage will revert to non-directional upon operation of the VTS.

When enabled, the following signals are set by the negative sequence O/C logic according to the status of the monitored function.

I2> Inhibit	(DDB 562)	-	Inhibit all 4 stages when high
I2>1 Tmr. Block	(DDB 563)	-	Block timer on 1st stage when high
I2>2 Tmr. Block	(DDB 564)	-	Block timer on 1st stage when high
I2>3 Tmr. Block	(DDB 565)	-	Block timer on 1st stage when high
I2>4 Tmr. Block	(DDB 566)	-	Block timer on 1st stage when high
I2>1 Start	(DDB 567)	-	1st stage started when high

I2>2 Start (DDB 568)	-	2nd stage started when high
I2>3 Start (DDB 569)	-	3rd stage started when high
I2>4 Start (DDB 570)	-	4th stage started when high
I2>1 Trip (DDB 571)	-	1st stage tripped when high
I2>2 Trip (DDB 572)	-	2nd stage tripped when high
I3>3 Trip (DDB 573)	-	3rd stage tripped when high
I4>4 Trip (DDB 574)	-	4th stage tripped when high

All the above signals are available as DDB signals for mapping in Programmable Scheme Logic (PSL). In addition the negative sequence overcurrent protection trips 1/2/3/4 are mapped internally to the block auto-reclose logic.

Negative sequence overcurrent protection starts 1/2/3/4 are mapped internally to the ANY START DDB signal – DDB 736.

The non-directional and directional operation is shown in the following diagrams:

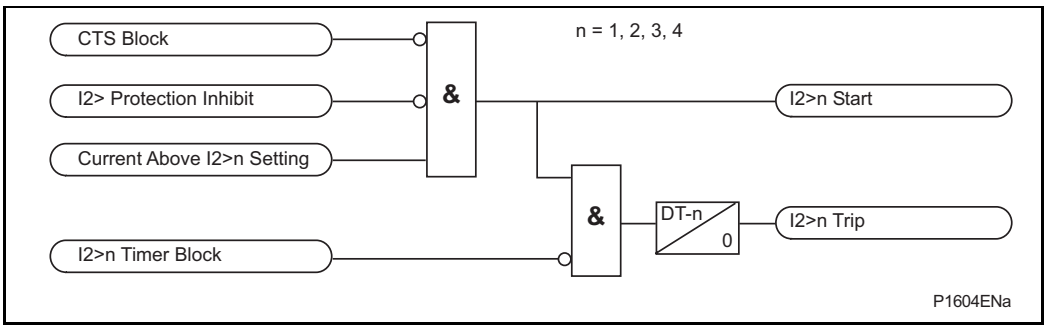

Figure 59 Negative sequence overcurrent non-directional operation

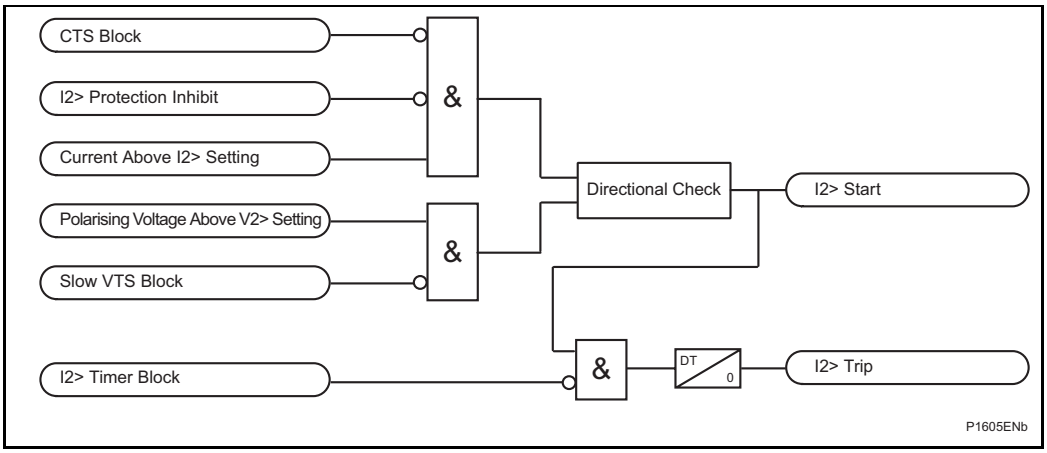

Figure 60 Directionalizing the negative phase sequence overcurrent element

1.31.1 Directionalizing the negative phase sequence overcurrent element

Directionality is achieved by comparison of the angle between the negative phase sequence voltage and the negative phase sequence current and the element may be selected to operate in either the forward or reverse direction. A suitable relay characteristic angle setting (I2> Char Angle) is chosen to provide optimum performance. This setting should be set equal to the phase angle of the negative sequence current with respect to the inverted negative sequence voltage (– V2), in order to be at the center of the directional characteristic.

For the negative phase sequence directional elements to operate, the relay must detect a polarizing voltage above a minimum threshold, **I2> V2pol Set**. The logic diagram for negative sequence overcurrent protection (shown with directional operation) is attached as Figure 61 below.

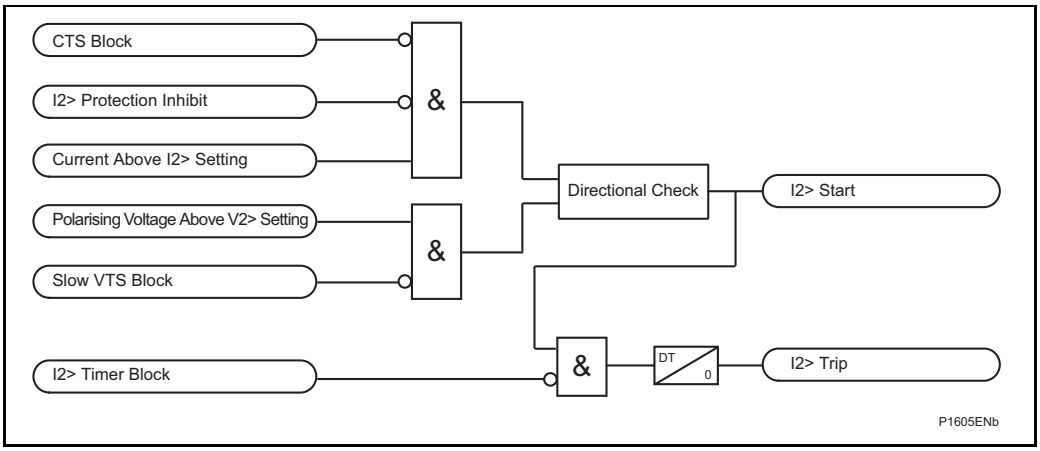

Figure 61 Directionalizing the negative phase sequence overcurrent element

1.32 Undervoltage protection

Both the under and overvoltage protection functions can be found in the relay menu **Volt Protection**. The measuring mode (ph-N or ph-ph) and operating mode (single phase or 3 phase) for both stages are independently settable.

Stage 1 may be selected as either IDMT, DT or Disabled, within the **V<1 function** cell. Stage 2 is DT only and is enabled/disabled in the **V<2 status** cell.

Two stages are included to provide both alarm and trip stages, where required. Alternatively, different time settings may be required depending upon the severity of the voltage dip.

Outputs are available for single or three phase conditions via the **V<Operate Mode** cell.

When the protected feeder is de-energized, or the circuit breaker is opened, an undervoltage condition would be detected. Therefore, the **V<Polehead Inh** cell is included for each of the two stages to block the undervoltage protection from operating for this condition. If the cell is enabled, the relevant stage will become inhibited by the inbuilt pole dead logic within the relay. This logic produces an output when it detects either an open circuit breaker via auxiliary contacts feeding the relay opto inputs or it detects a combination of both undercurrent and undervoltage on any one phase.

The IDMT characteristic available on the first stage is defined by the following formula:

$t = K/(1 - M)$

Where:

K = Time multiplier setting

t = Operating time in seconds

M = Measured voltage / relay setting voltage (V< Voltage Set)

OP

The logic diagram for the first stage undervoltage function is shown in Figure 62.

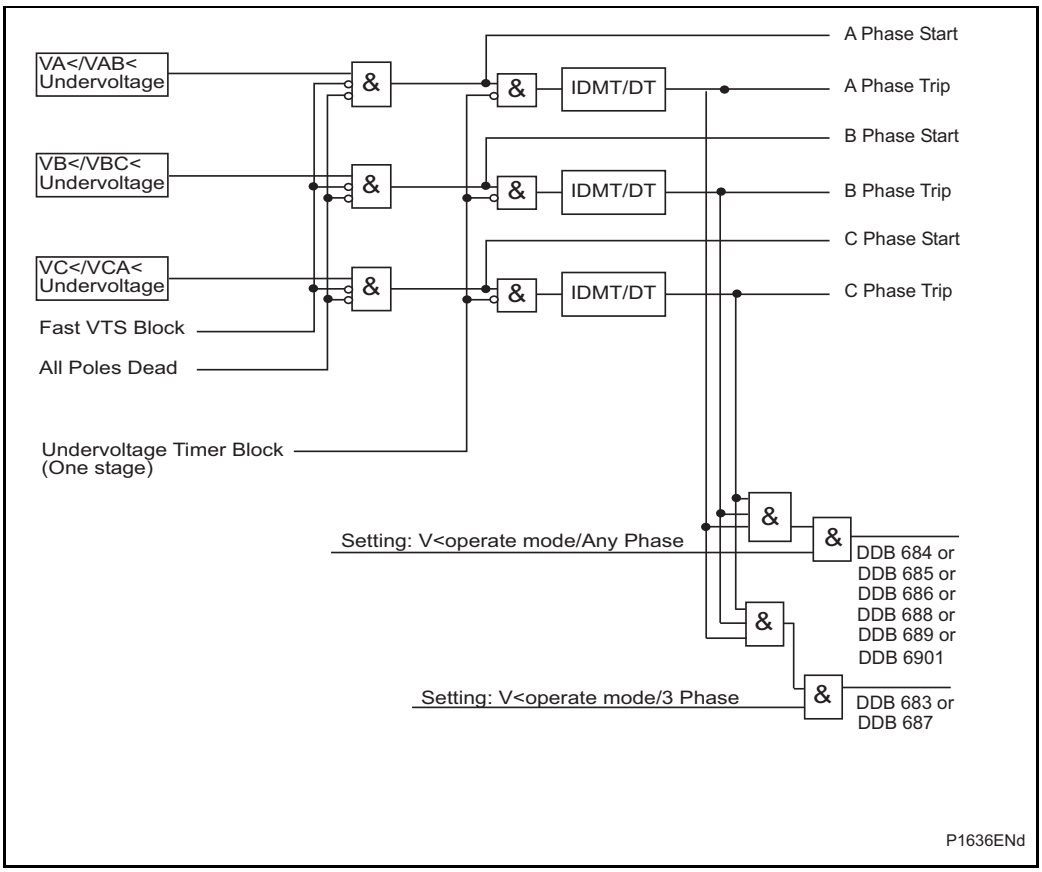

Figure 62 Undervoltage - single and three phase tripping mode (single stage)

Note: Undervoltage protection is phase segregated, but the operation of any phase is mapped to 3 phase tripping in the default PSL.

Each stage of Undervoltage protection may be disabled by a DDB (471 or 472) **Inhibit Vx<**.

1.33 Overvoltage protection

Both the over and undervoltage protection functions can be found in the relay menu **Volt Protection**. The measuring mode (ph-N or ph-ph) and operating mode (single phase or 3 phase) for both stages are independently settable.

The IDMT characteristic available on the first stage is defined by the following formula:

$t = K/(M - 1)$

Where:

K = Time multiplier setting

t = Operating time in seconds

M = Measured voltage/relay setting voltage (V> Voltage Set)

The logic diagram for the first stage overvoltage function is shown in Figure 63.

OP

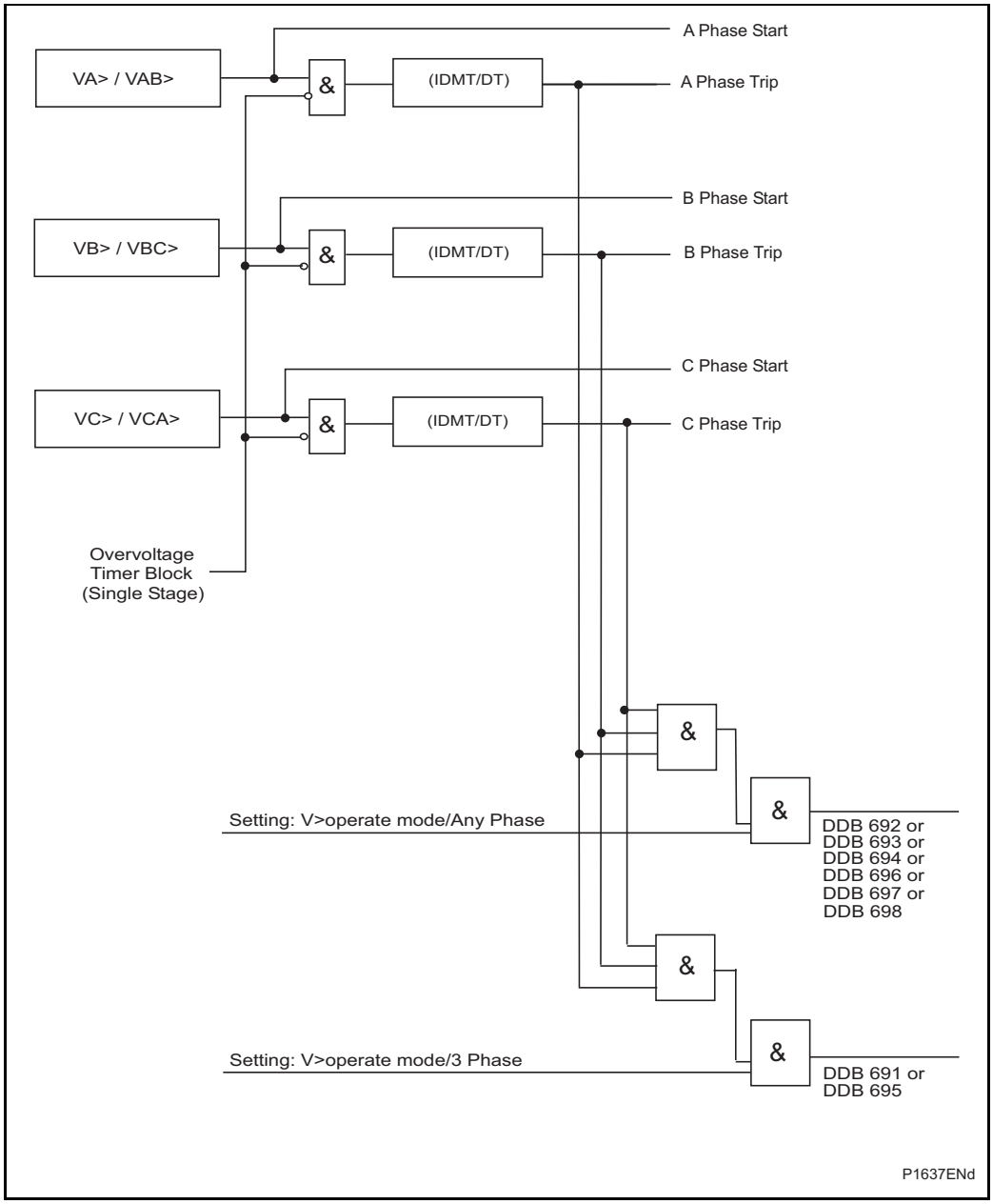

Figure 63 Overvoltage - single and three phase tripping mode (single stage)

Note: Phase overvoltage protection is phase segregated, but the operation of any phase is mapped to 3 phase tripping in the default PSL.

Each stage of Overvoltage protection may be disabled by a DDB (473 or 474) **Inhibit Vx>** (x = 1, 2).

1.33.1 Compensated overvoltage

The Compensated Overvoltage function calculates the positive sequence voltage at the remote terminal using the positive sequence local current and voltage and the line impedance and susceptance. This can be used on long transmission lines where Ferranti Overvoltages can develop under remote circuit breaker open conditions.

The Compensated overvoltage protection function can be found in the relay menu **Volt Protection**. The line impedance settings together with the line charging admittance in relay menu **Line Parameters** is used to calculate the remote voltage.

OP

The relay uses the {A,B,C,D] transmission line equivalent model given the following parameters:

Total Impedance $Z = z\angle\theta\Omega$ and

Total Susceptance $Y = y\angle -90\Omega$ and

Line Length l

The remote voltage is calculated using the following equations:

$$\begin{bmatrix} \bar{V}r \\ \bar{I}r \end{bmatrix} = \begin{bmatrix} D & -C \\ -B & A \end{bmatrix} \times \begin{bmatrix} \bar{V}s \\ \bar{I}s \end{bmatrix}$$

where

Vr, Ir - Voltage and Current at the receiving end.

Vs, Is - Measured (relay) Voltage and Current at the sending end.

$$A = D = \cosh(\gamma \times l)$$

$$B = Zc \times \sinh(\gamma \times l)$$

$$C = Yc \times \sinh(\gamma \times l)$$

$$\gamma \times l = \sqrt{ZY}$$

$$Zc = \frac{1}{Yc} = \sqrt{\frac{Z}{Y}}$$

Y – Total Line Capacitive Charging Susceptance

Zc = Characteristic Impedance of the line (Surge Impedance).

Two stages are included to provide both alarm and trip stages, where required.

Both stages are independently settable where Stage 1 may be selected as either IDMT, DT or Disabled, within the **V1>1 Cmp Funct** cell. Stage 2 is DT only and is enabled/disabled in the **V1>Cmp Status** cell.

The IDMT characteristic available on the first stage is defined by the following formula:

t = K/(M - 1)

Where:

K = Time multiplier setting

t = Operating time in seconds

M = Remote Calculated voltage / relay setting voltage (PH-)

OP

1.34 Residual overvoltage (neutral displacement) protection

The NVD element within the MiCOM P54x is of two stage design, each stage having separate voltage and time delay settings. Stage 1 may be set to operate on either an IDMT or DT characteristic, whilst stage 2 may be set to DT only. Two stages are included for the NVD protection to account for applications which require both alarm and trip stages.

The relay internally derives the NVD voltage from the 3 input phases which must be supplied from either a 5-limb or three single phase VT's. These types of VT design allow the passage of residual flux and consequently permit the relay to derive the required residual voltage. In addition, the primary star point of the VT must be earthed. A three limb VT has no path for residual flux and is therefore unsuitable to supply the relay.

The IDMT characteristic available on the first stage is defined by the following formula:

$t = K/(M - 1)$

Where:

K = Time multiplier setting

t = Operating time in seconds

M = Derived residual voltage/relay setting voltage (VN> Voltage Set)

The functional block diagram of the first stage residual overvoltage is shown below:

OP

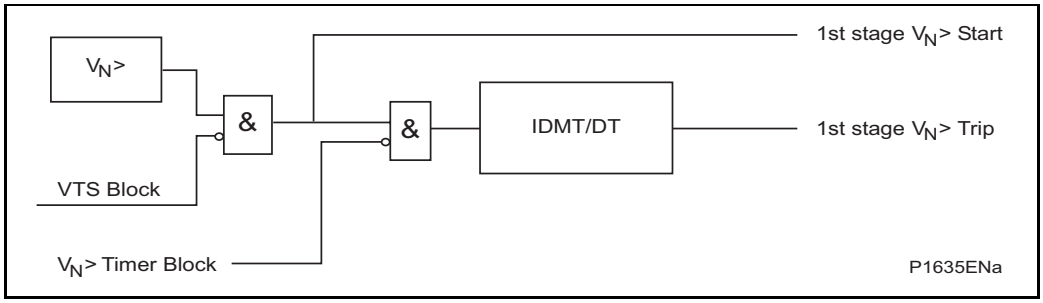

Figure 64 Residual overvoltage logic (single stage)

Each stage of Residual Overvoltage protection may be disabled by a DDB (475 or 476) **Inhibit VN>x** (x = 1, 2).

1.35 Circuit breaker fail protection (CBF)

The circuit breaker failure protection incorporates two timers, 'CB Fail 1 Timer' and 'CB Fail 2 Timer', allowing configuration for the following scenarios:

- Simple CBF, where only 'CB Fail 1 Timer' is enabled. For any protection trip, the 'CB Fail 1 Timer' is started, and normally reset when the circuit breaker opens to isolate the fault. If breaker opening is not detected, 'CB Fail 1 Timer' times out and closes an output contact assigned to breaker fail (using the programmable scheme logic). This contact is used to backtrip upstream switchgear, generally tripping all infeeds connected to the same busbar section.

- A re-tripping scheme, plus delayed backtripping. Here, 'CB Fail 1 Timer' is used to route a trip to a second trip circuit of the same circuit breaker. This requires duplicated circuit breaker trip coils, and is known as re-tripping. Should re-tripping fail to open the circuit breaker, a backtrip may be issued following an additional time delay. The backtrip uses 'CB Fail 2 Timer', which is also started at the instant of the initial protection element trip.

CBF elements 'CB Fail 1 Timer' and 'CB Fail 2 Timer' can be configured to operate for trips triggered by protection elements within the relay or via an external protection trip. The latter is achieved by allocating one of the relay opto-isolated inputs to 'External Trip' using the programmable scheme logic.

1.35.1 Reset mechanisms for breaker fail timers

It is common practice to use low set undercurrent elements in protection relays to indicate that circuit breaker poles have interrupted the fault or load current, as required. This covers the following situations:

- Where circuit breaker auxiliary contacts are defective, or cannot be relied upon to definitely indicate that the breaker has tripped.
- Where a circuit breaker has started to open but has become jammed. This may result in continued arcing at the primary contacts, with an additional arcing resistance in the fault current path. Should this resistance severely limit fault current, the initiating protection element may reset. Therefore, reset of the element may not give a reliable indication that the circuit breaker has opened fully.

For any protection function requiring current to operate, the relay uses operation of undercurrent elements (I<) to detect that the necessary circuit breaker poles have tripped and reset the CB fail timers. However, the undercurrent elements may not be reliable methods of resetting circuit breaker fail in all applications. For example:

- Where non-current operated protection, such as under/overvoltage derives measurements from a line connected voltage transformer. Here, I< only gives a reliable reset method if the protected circuit would always have load current flowing. Detecting drop-off of the initiating protection element might be a more reliable method.

OP

- Similarly, where the distance scheme includes Weak Infeed ("WI") trip logic, the reset of the WI trip condition should be used in addition to the undercurrent check. Set: *'WI Prot Reset'* = Enabled.
- Where non-current operated protection, such as under/overvoltage derives measurements from a busbar connected voltage transformer. Again using I< would rely upon the feeder normally being loaded. Also, tripping the circuit breaker may not remove the initiating condition from the busbar, and hence drop-off of the protection element may not occur. In such cases, the position of the circuit breaker auxiliary contacts may give the best reset method.

Resetting of the CBF is possible from a breaker open indication (from the relay's pole dead logic) or from a protection reset. In these cases resetting is only allowed provided the undercurrent elements have also reset. The resetting options are summarized in the following table.

Initiation (menu selectable)	**CB Fail timer reset mechanism**
Current based protection (e.g. 50/51/46/21/67)	The resetting mechanism is fixed [IA< operates] & [IB< operates] & [IC< operates] & [IN< operates]
Non-current based protection (e.g. 27/59)	Three options are available. The user can Select from the following options: [All I< and IN< elements operate] [Protection element reset] AND [All I< and N< elements operate] CB open (all 3 poles) AND [All I< and IN< elements operate]
External protection	Three options are available: The user can select any or all of the options. [All I< and IN< elements operate] [External trip reset] AND [All I< and IN< elements operate] CB open (all 3 poles) AND [All I< and IN< elements operate]

The complete breaker fail logic is illustrated in Figure 65, Figure 66 and Figure 68.

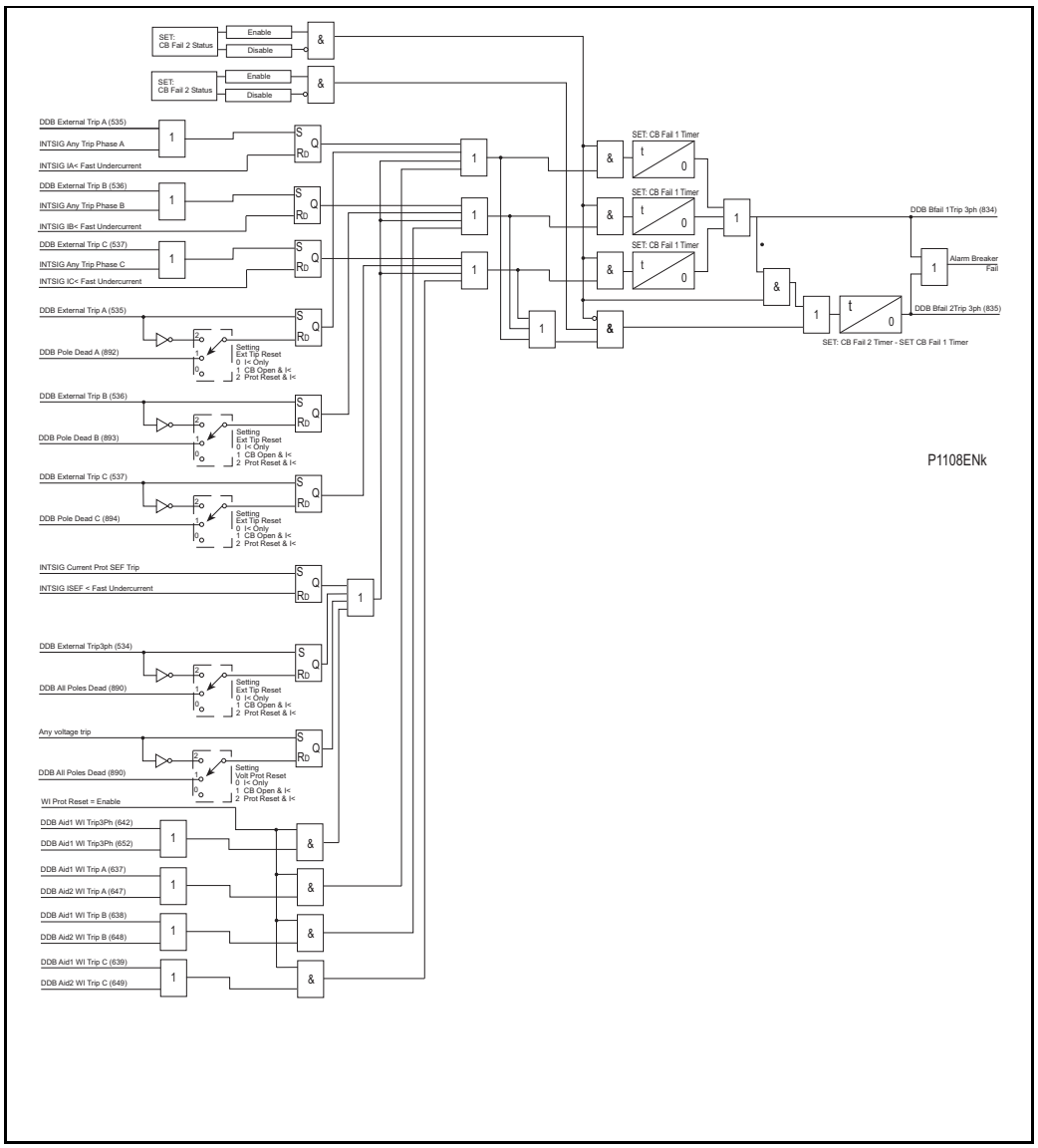

Figure 65 CB failure for P543 and P545 models

OP

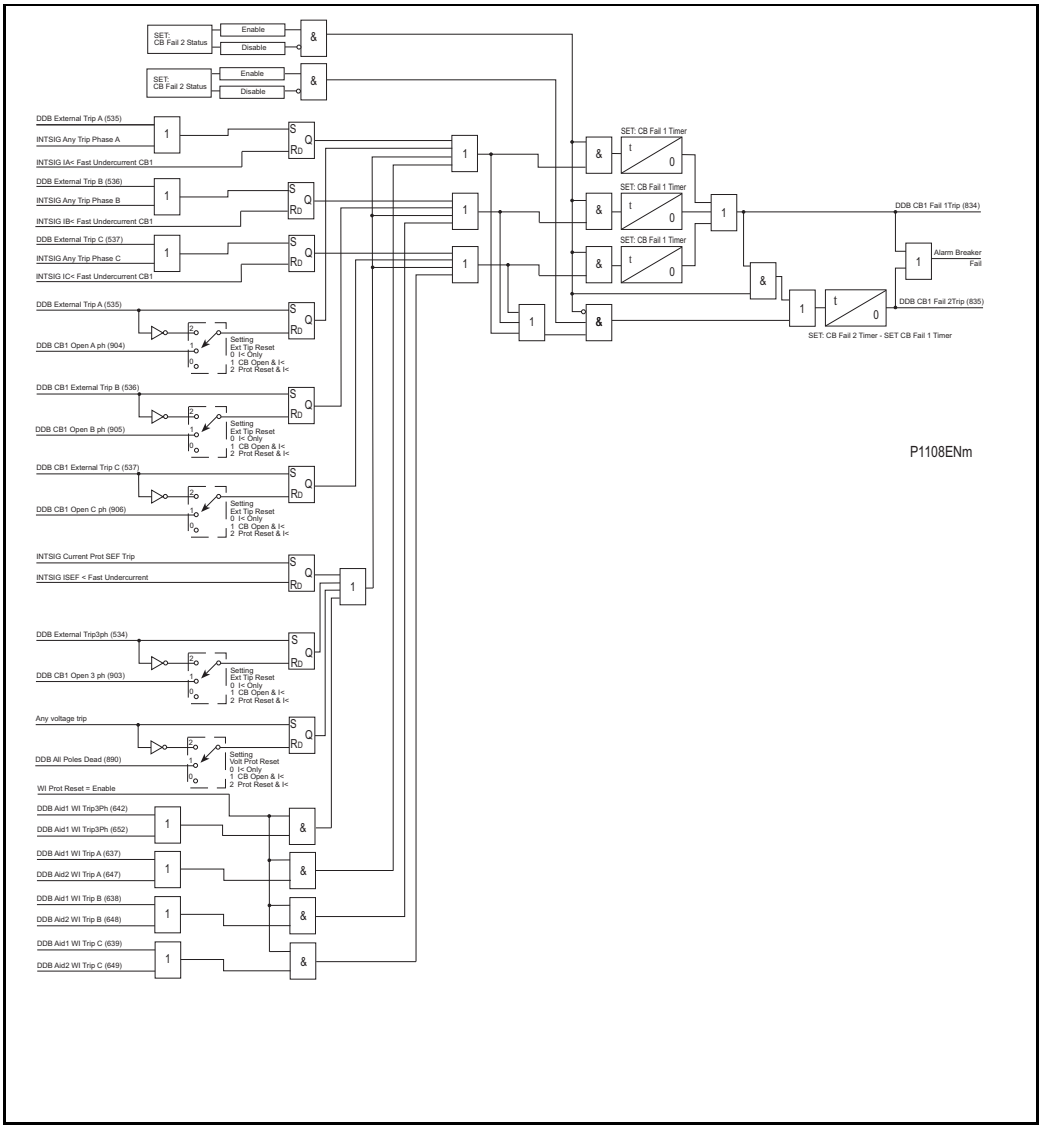

Figure 66 CB1 failure logic for P544 and P546 models

OP

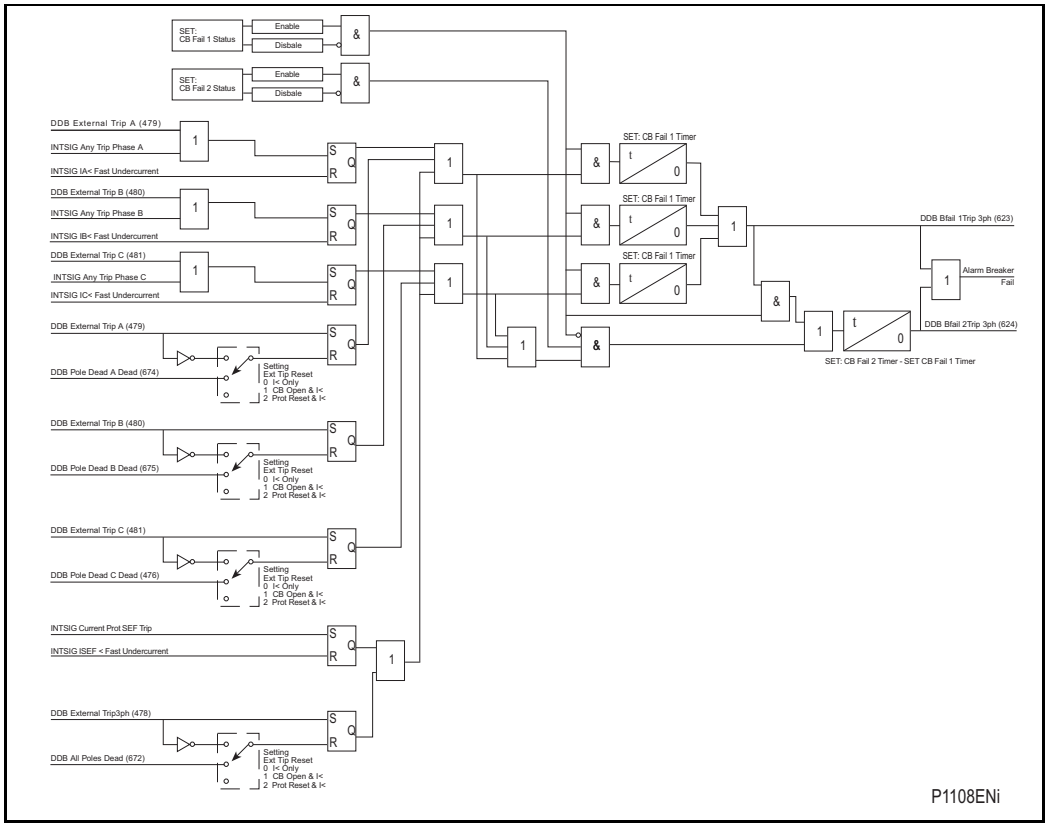

Figure 67 CB2 failure logic for P544 and P546 models

1.36 Broken conductor detection

The relay incorporates an element which measures the ratio of negative to positive phase sequence current (I2/I1). This will be affected to a lesser extent than the measurement of negative sequence current alone, since the ratio is approximately constant with variations in load current. Hence, a more sensitive setting may be achieved.

The logic diagram is as shown below. The ratio of I2/I1 is calculated and is compared with the threshold and if the threshold is exceeded then the delay timer is initiated. The CTS block signal is used to block the operation of the delay timer.

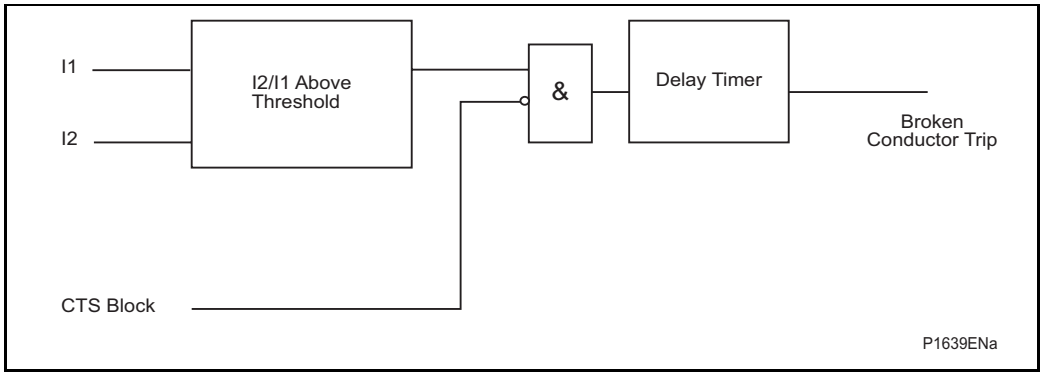

Figure 68 Broken conductor logic

OP

OP

1.37 Frequency protection

The relay includes 4 stages of underfrequency and 2 stages of overfrequency protection to facilitate load shedding and subsequent restoration. The underfrequency stages may be optionally blocked by an undervoltage level (setting CB FAIL & P.DEAD/POLEDEAD VOLTAGE/V<). All the stages may be enabled/disabled in the "F<n Status" or "F>n Status" cell depending on which element is selected.

The logic diagram for the underfrequency logic is as shown in Figure 69. Only a single stage is shown. The other 3 stages are identical in functionality.

If the frequency is below the setting and not blocked the DT timer is started. Blocking may come from the Undervoltage level (selectively enabled for each stage) or the underfrequency timer block.

If the frequency cannot be determined, the function is also blocked.

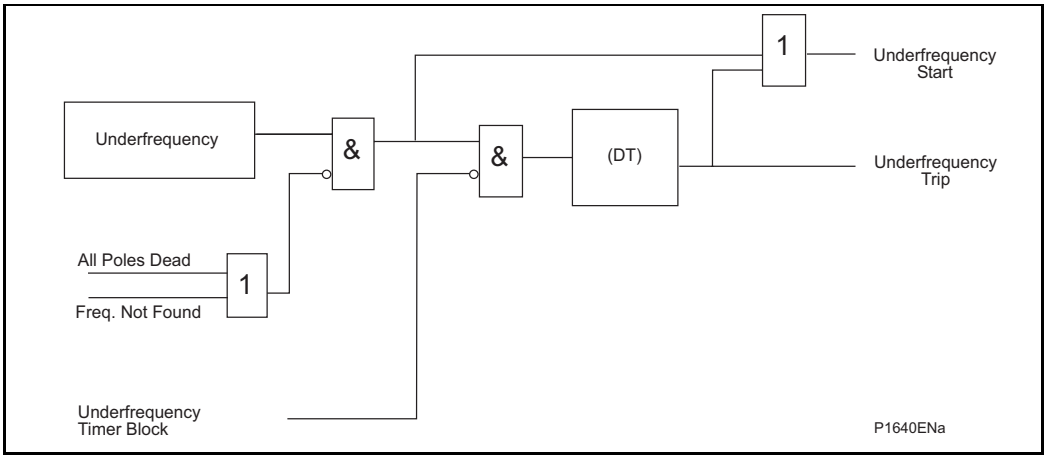

Figure 69 Underfrequency logic (single stage)

The functional logic diagram is for the overfrequency function as shown in Figure 70. Only a single stage is shown as the other stages are identical in functionality. If the frequency is above the setting and not blocked the DT timer is started and after this has timed out the trip is produced. Blocking may come from the All_Poledead signal (selectively enabled for each stage) or the overfrequency timer block.

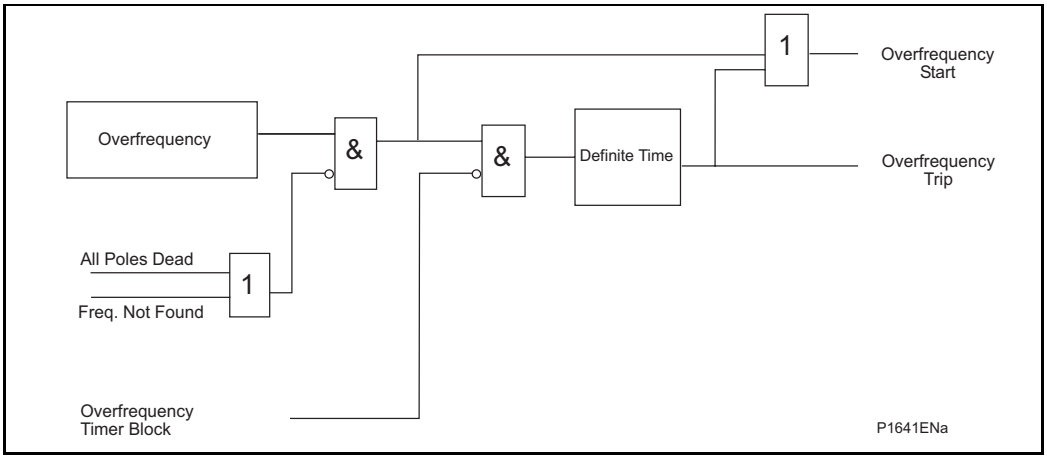

Figure 70 Overfrequency logic (single stage)

When enabled, the following signals are set by the under/overfrequency logic according to the status of the monitored functions.

F<1 Timer Block	(DDB 1149)	-	Block Underfrequency Stage 1 Timer
F<2 Timer Block	(DDB 1150)	-	Block Underfrequency Stage 2 Timer
F<3 Timer Block	(DDB 1151)	-	Block Underfrequency Stage 3 Timer
F<4 Timer Block	(DDB 1152)	-	Block Underfrequency Stage 4 Timer
F>1 Timer Block	(DDB 1153)	-	Block Overfrequency Stage 1 Timer
F>2 Timer Block	(DDB 1154)	-	Block Overfrequency Stage 2 Timer
F<1 Start	(DDB 1155)	-	Underfrequency Stage 1 Start
F<2 Start	(DDB 1156)	-	Underfrequency Stage 2 Start
F<3 Start	(DDB 1157)	-	Underfrequency Stage 3 Start
F<4 Start	(DDB 1158)	-	Underfrequency Stage 4 Start
F>1 Start	(DDB 1159)	-	Overfrequency Stage 1 Start
F>2 Start	(DDB 1160)	-	Overfrequency Stage 2 Start
F<1 Trip	(DDB 1161)	-	Underfrequency Stage 1 Trip
F<2 Trip	(DDB 1162)	-	Underfrequency Stage 2 Trip
F<3 Trip	(DDB 1163)	-	Underfrequency Stage 3 Trip
F<4 Trip	(DDB 1164)	-	Underfrequency Stage 4 Trip
F>1 Trip	(DDB 1165)	-	Overfrequency Stage 1 Trip
F>2 Trip	(DDB 1166)	-	Overfrequency Stage 2 Trip
Inhibit F<1	(DDB 1167)	-	Inhibit stage 1 Under frequency protection
Inhibit F<2	(DDB 1168)	-	Inhibit stage 2 Under frequency protection
Inhibit F<3	(DDB 1169)	-	Inhibit stage 3 Under frequency protection
Inhibit F<4	(DDB 1170)	-	Inhibit stage 4 Under frequency protection
Inhibit F>1	(DDB 1171)	-	Inhibit stage 1 Over frequency protection
Inhibit F>2	(DDB 1172)	-	Inhibit stage 2 Over frequency protection

OP

1.38 Independent rate of change of frequency protection [81R]

In the load shedding scheme below, it is assumed under falling frequency conditions that by shedding a stage of load, the system can be stabilized at frequency f2. For slow rates of decay, this can be achieved using the underfrequency protection element set at frequency f1 with a suitable time delay. However, if the generation deficit is substantial, the frequency will rapidly decrease and it is possible that the time delay imposed by the underfrequency protection will not allow for frequency stabilization. In this case, the chance of system recovery will be enhanced by disconnecting the load stage based upon a measurement of rate of change of frequency and bypassing the time delay.

This element is a rate of change of frequency monitoring element, and operates independently from the under and over frequency protection functions. A timer is included to provide a time delayed operation and the element can be utilized to provide extra flexibility to a load shedding scheme in dealing with severe load to generation imbalances.

Since the rate of change monitoring is independent of frequency, the element can identify frequency variations occurring close to nominal frequency and therefore provide early warning to the operator on a developing frequency problem. Additionally, the element could also be used as an alarm to warn operators of unusually high system frequency variations.

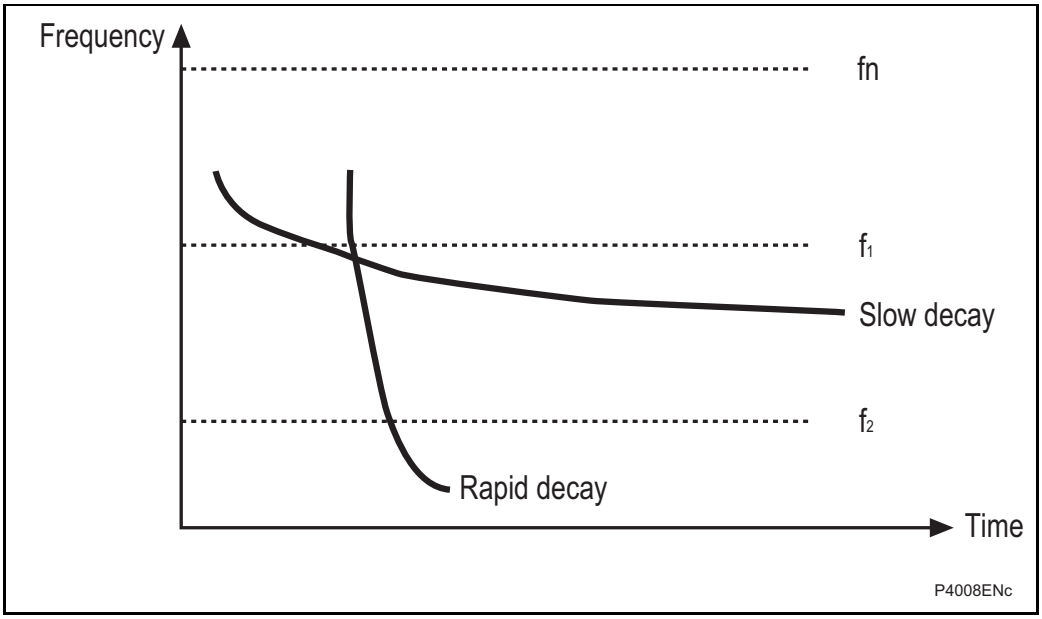

Figure 71 Rate of change of frequency protection

1.38.1 Basic functionality

The relay provides four independent stages of rate of change of frequency protection (df/dt+t). Depending upon whether the rate of change of frequency setting is set positive or negative, the element will react to rising or falling frequency conditions respectively, with an incorrect setting being indicated if the threshold is set to zero. The output of the element would normally be given a user-selectable time delay, although it is possible to set this to zero and create an instantaneous element.

An Independent setting is available for calculating the rate of change of frequency measurement, **df/dt Avg. Cycles** over a fixed period of either 6 or 12 cycles. This provides the ability to de-sensitize the frequency based protection element against oscillations in the power system frequency. The 12-cycle averaging window setting improves measurement accuracy, but slows down the protection start time following fault inception. The maximum fault detection start time following fault inception can be approximated as follows:

Fault Detection Delay Time (cycles) = 2 X M + 1

Where M = No. of frequency averaging cycles **df/dt.Av. Cycles**

When enabled, the following signals are set by the df/dt logic according to the status of the monitored function.

df/dt> Inhibit	(DDB 592)	-	Inhibit all 4 stages when high
df/dt>1 Tmr. Block	(DDB 593)	-	Block timer on 1st stage when high
df/dt>2 Tmr. Block	(DDB 594)	-	Block timer on 2nd stage when high
df/dt>3 Tmr. Block	(DDB 595)	-	Block timer on 3rd stage when high
df/dt>4 Tmr. Block	(DDB 596)	-	Block timer on 4th stage when high
df/dt>1 Start	(DDB 597)	-	1st stage started when high
df/dt>2 Start	(DDB 598)	-	2nd stage started when high
df/dt>3 Start	(DDB 599)	-	3rd stage started when high
df/dt>4 Start	(DDB 600)	-	4th stage started when high
df/dt>1 Trip	(DDB 601)	-	1st stage tripped when high
df/dt>2 Trip	(DDB 602)	-	2nd stage tripped when high
df/dt>3 Trip	(DDB 603)	-	3rd stage tripped when high
df/dt>4 Trip	(DDB 604)	-	4th stage tripped when high

OP

All the above signals are available as DDB signals for mapping in Programmable Scheme Logic (PSL).

1.39 Special weak infeed logic for stub end transformer terminals

The true weak infeed condition is when no current based protection element is sensitive enough to operate. This is the case when zero or minimal generation is connected at that terminal, and the prospective level of fault current flowing through the CT is insufficient for any forward/reverse protection operation. In such cases, the fault will be cleared using either POR or Blocking schemes and enabling WI Echo + Trip.

However, there could be a specific configuration as presented in Figure 72 that may not be detected by relay as a weak infeed condition, even if there is no generation at that end (left side - relay R2).

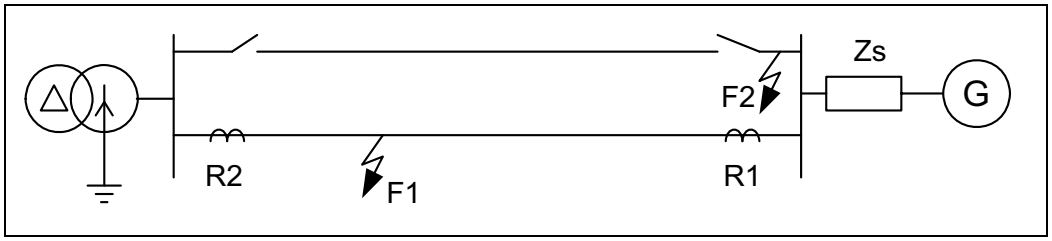

Figure 72 Weak infeed configuration on stub-fed radial circuit (parallel line is out of service)

The reason is a star earthed transformer which, in case of phase to ground and double phase to ground faults, imposes a very low zero sequence impedance and almost infinite positive and negative sequence impedance, i.e. behaving as a source of zero sequence current only. In such a case, the zero sequence current Io will dominate over I_1 and I_2 at the weak end, where all three phase currents will approximately equal Io (all in phase and equal in magnitude). This is true for F1 earth faults at R2, and for F2 earth faults at R1 and R2. The phase currents will be sufficient to pickup current level detectors in the MiCOM P54x, and a true weak infeed condition will not be seen as such by the relay.

In such a stub-end feeding case, relay R2 may experience some overreach in the case of double-phase to ground faults. This is caused by the unusual current distribution making the MiCOM P54x detect a single phase fault condition (and potential single pole tripping only in single pole tripping applications).

For this unusual feeding arrangement, the MiCOM P54x makes available a Zero sequence stabilizing feature, that measures the dominance of zero sequence current over negative sequence current (I_o/I_2). It promotes stability by forcing the relay to recognize the above configuration as a WI condition. It then blocks all distance elements, once the measured I_o/I_2 ratio exceeds the setting.

2. COMMUNICATIONS BETWEEN RELAYS

2.1 Communications link options

A number of communications options are available, for the communication channels between P54x system ends. The various connection options are shown below. Choosing between each of these options will depend on the type of communications equipment that is available.

Where existing suitable multiplexer communication equipment is installed for other communication between substations, the 850 nm option together with an appropriate ITU-T compatible electrical interface (P590 series unit) should be selected to match the existing multiplexer equipment. For further information on the P590 optical fiber to electrical interface units, refer to section 2.1.8

Where an IEEE C37.94 compatible multiplexer is installed the 850 nm option should be configured to interface directly to the multiplexer, refer to section 2.1.5.

Where no multiplexer is installed, the direct optical fiber connection can be used, refer to sections 2.1.1 - 2.1.4. The type of fiber used (multi-mode or single-mode and wavelength) will be determined by the distance between the ends of the P54x relay system, refer to optical budgets in chapter *P54x/EN/AP*.

In any configuration, except the IEEE C37.94, the data rate may be selected as either 64kbit/sec or 56kbit/sec.

2.1.1 Direct optical fiber link, 850 nm multi-mode fiber

The relays are connected directly using two 850 nm multi-mode optical fibers for each signaling channel. Multi-mode fiber type 50/125 μm or 62.5/125 μm is suitable. BFOC/2.5 type fiber optic connectors are used. These are commonly known as “ST” connectors (“ST” is a registered trademark of AT&T).

This is typically suitable for connection up to 1km.

2.1.2 Direct optical fiber link, 1300 nm multi-mode fiber

The relays are connected directly using two 1300 nm multi-mode fibers for each signaling channel. Multi-mode fiber type 50/125 μm or 62.5/125 μm is suitable. BFOC/2.5 type fiber optic connectors are used.

This is typically suitable for connection up to approximately 50 km (from April 2008). Pre-April 2008 relays were suitable for connection up to approximately 30 km.

2.1.3 Direct optical fiber link, 1300 nm single-mode fiber

The relays are connected directly using two 1300 nm single-mode fibers, type 9/125 μm for each signaling channel. BFOC/2.5 type fiber optic connectors are used.

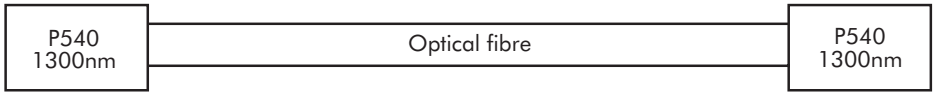

This is typically suitable for connection up to approximately 100 km (from April 2008). Pre-April 2008 relays were suitable for connection up to approximately 60 km.

2.1.4 Direct optical fiber link, 1550 nm single-mode fiber

The relays are connected directly using two 1550 nm single-mode fibers, type 9/125 μm for each signaling channel. BFOC/2.5 type fiber optic connectors are used.

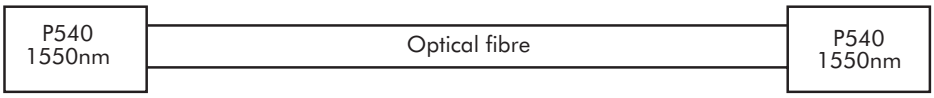

This is typically suitable for connection up to approximately 130 km (from April 2008). Pre-April 2008 relays were suitable for connection up to approximately 80 km.

The list of all available fiber channel options is:

820 nm dual channel

1300 nm single-mode/single channel

1300 nm single-mode/dual channel

1300 nm multi-mode/single channel

1300 nm multi-mode/dual channel

1550 nm single-mode/single channel

1550 nm single-mode/dual channel

Ch 1 850nm multi-mode + Ch 2 1300nm single-mode

Ch 1 850nm multi-mode + Ch 2 1550nm single-mode

Ch 1 1300nm single-mode + Ch 2 850nm multi-mode

Ch 1 1300nm multi-mode + Ch 2 850nm multi-mode

Ch 1 1550nm single-mode + Ch 2 850nm multi-mode

OP

2.1.5 IEEE C37.94 interface to multiplexer

A P54x relay with 850 nm short haul optical interface is connected directly to the multiplexer by 850 nm multi-mode optical fiber. Multi-mode fiber type 50/125 μm or 62.5/125 μm is suitable. BFOC/2.5 type fiber optic connectors are used.

The setting Comms Mode should be set to IEEE C37.94. Note the relay must be powered off and on before this setting change becomes effective.

The IEEE C37.94 standard defines an N*64kbits/s standard where N can be 1 – 12. N can be selected on the P54x or alternatively set to Auto in which case the relay will configure itself to match the multiplexer.

2.1.6 Switched communication networks

The P54x relays make use of digital communication signaling channels for the differential protection. For correct operation of this protection element, it is essential that the integrity of this link is continuously checked. For P54x relays, when GPS is not used it is also a requirement of this link that ‘go’ (tp1) and ‘return’ (tp2) times are similar (a difference of up to 1 ms can be tolerated). Times greater than this can result in relay instability.

Where switched communications networks are used, it is possible that during switching, a transient time period may exist with different ‘go’ and ‘return’ times. All P54x relays include a facility to ensure protection stability during this transient period.

One of the checks performed on the communications link is a check on the calculated propagation delay for each data message. During normal operation the difference in calculated time should be minimal (possible delays being introduced by multiplexers or other intermediary communication equipment). If successive calculated propagation delay times exceed a user settable value (250 – 1000 μs). The P54x raise a comm delay alarm and initiate a change in relay setting for a short time period (Char Mod Time setting) to overcome any switching delay. This change in setting is shown in Figure 74 whereby the relay bias setting, k1, is increased to 200%. This characteristic provides stability for all load conditions and will still allow tripping for most internal fault conditions.

Figure 73 shows a possible scenario for a switched network. Initially the P54x relays are communicating via path 1. The go and return times for this path are 2 ms and hence the calculated propagation delay is (2 + 2)/2 = 2 ms. When the channel is switched to path 2, a small time period exists where the P54x's could be sending messages via path 1 and returning via path 2.

The calculated propagation delay will now be (2 + 5)/2 = 3.5 ms. The resultant 1.5 ms error at each line end may cause the relay to maloperate due to incorrect time alignment of current vectors (see section 1.1.1.1). After a short delay, both 'go' and 'return' paths will follow route 2 and the calculated propagation delay will be (5 + 5)/2 = 5 ms. The relay will now be stable, as correct current vector time alignment exists at each line end.

The Char Mod timer is started when a change in propagation delay is detected. Any subsequent change during this period will cause the timer to restart. In the above example the timer will start for the first change (2 to 3.5 ms). The second change (3.5 ms to 5 ms) will cause the timer to restart, therefore allowing for multiple switching between communication paths.

A change in propagation delay may result in a temporary failure of the protection communications channel. If this occurs, the propagation delay change may not be detected by the relay. To overcome this problem, the Char Mod Timer is re-started when the channel recovers from a protection communications channel failure if the Char Mod Timer was running when the channel failure occurred.

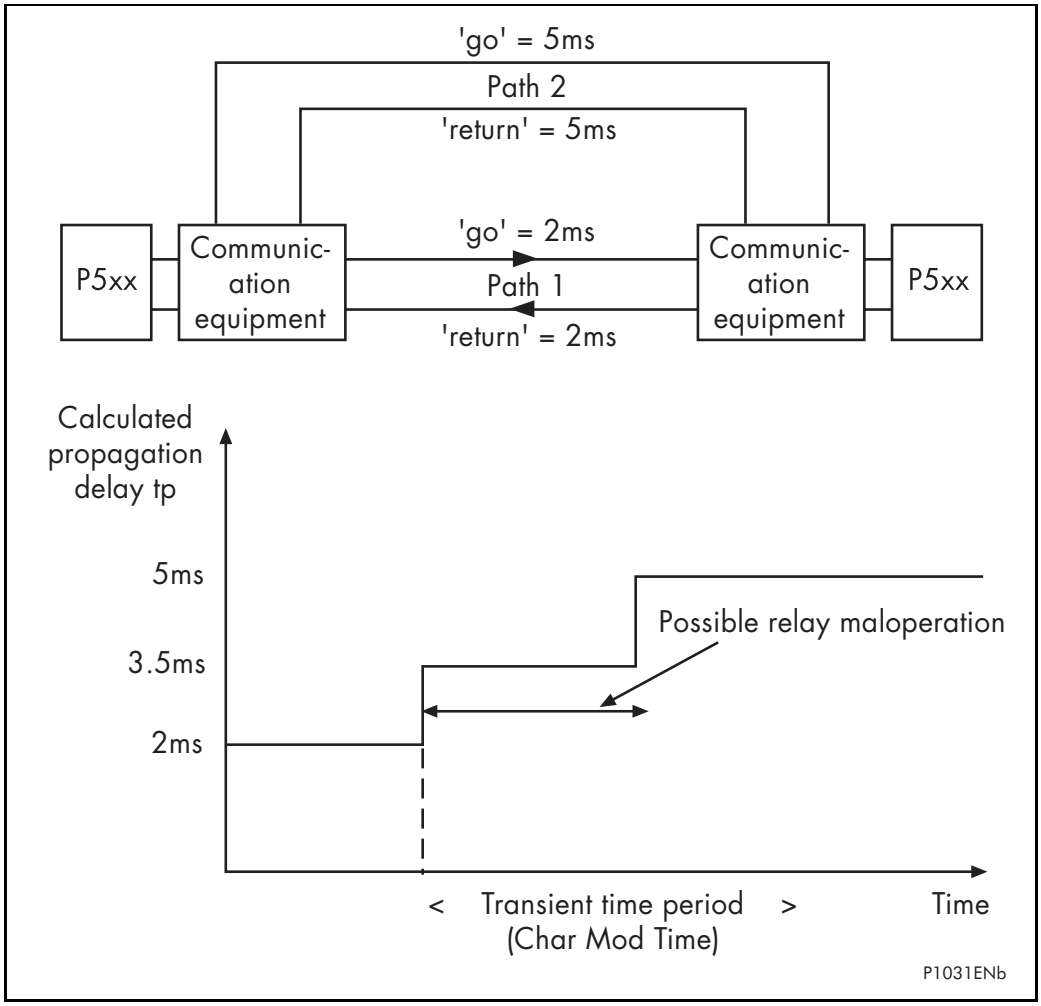

Figure 73 Switched communication network

OP

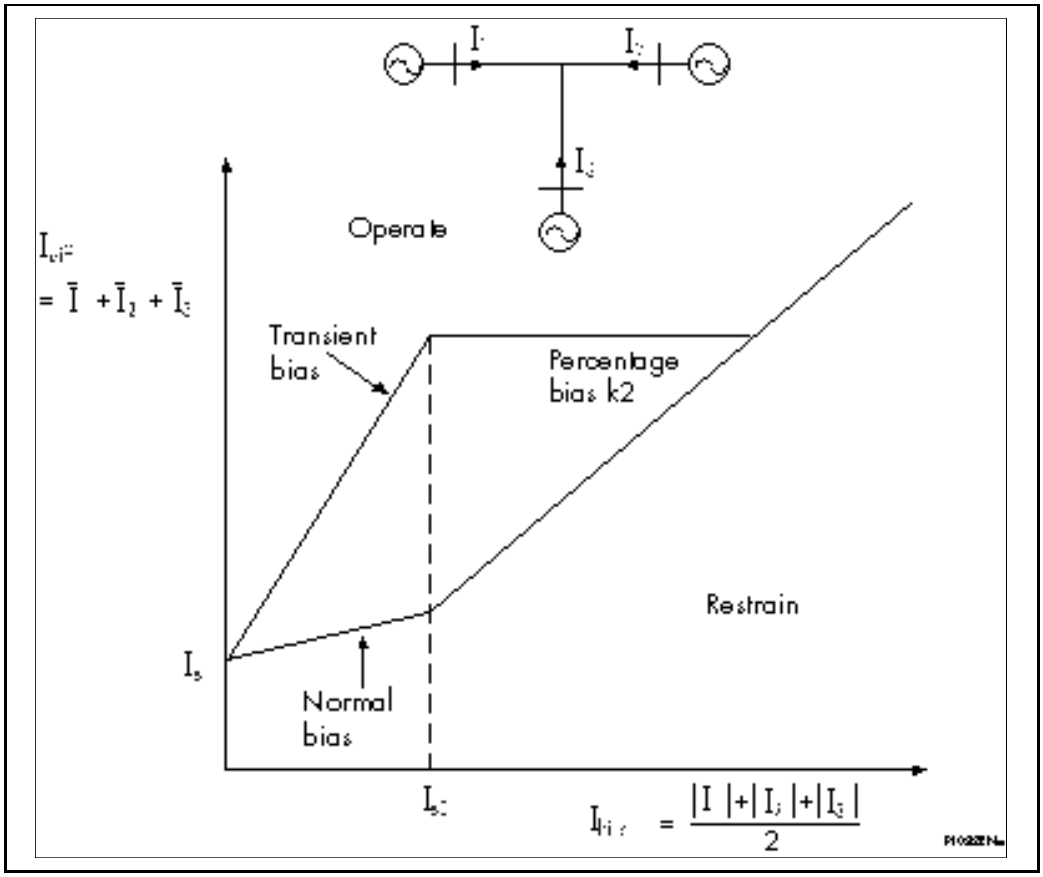

Figure 74 Transient bias characteristic

2.1.7 Switched communication networks with permanent or semi-permanent split routings

MiCOM P54x relays, utilizing timing information from the GPS system, are suitable for use on switched communication signaling channels for the differential protection. For correct operation of this protection element, it is essential that the integrity of this link is continuously checked. It is not, however, a requirement that ‘go’ (tp1) and ‘return’ (tp2) times are similar if the GPS synchronization feature is used.

2.1.8 P590 Series optical fiber to electrical interface units

In order to connect the P54x relays via a pulse code modulation (PCM) multiplexer network or digital communication channel, Type P590 type interface units are required. The following interface units are available:

- P591 interface to multiplexing equipment supporting ITU-T (formerly CCITT) Recommendation G.703 co-directional electrical interface
- P592 interface to multiplexing equipment supporting ITU-T Recommendation V.35 electrical interface
- P593 interface to multiplexing or ISDN equipment supporting ITU-T Recommendation X.21 electrical interface

The data rate for each unit can be 56 kbit/sec or 64 kbit/sec as required for the data communications link.

One P590 unit is required per relay data channel (i.e. for each transmit and receive signal pair). It provides optical to electrical and electrical to optical signal conversion between the P54x relay and the multiplexer. The interface unit should be located as close to the PCM multiplexer as possible, to minimize any effects on the data of electromagnetic noise or interference.

OP

The units are housed in a 20TE MiCOM case.

Fiber optic connections to the unit are made through BFOC/2.5 type connectors, more commonly known as 'ST' connectors.

The optical characteristics are similar to the P54x 850 nm multi-mode fiber optic interface (refer to optical budgets in chater *P54x/EN/AP*).

2.1.9 Multiplexer link with G.703 electrical interface using auxiliary optical fibers and type P591 interface

A P54x relay with 850 nm short haul optical interface is connected to a P591 unit by 850 nm multi-mode optical fiber. Multi-mode fiber type 50/125 μm or 62.5/125 μm is suitable. BFOC/2.5 type fiber optic connectors are used. The P591 unit converts the data between optical fiber and ITU-T compatible G.703 co-directional electrical interface. The G.703 output must be connected to an ITU-T compatible G.703 co-directional channel on the multiplexer.

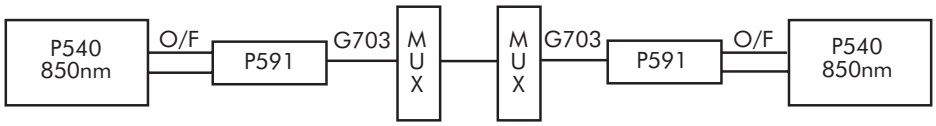

OP

The P591 unit supports the ITU-T Recommendation G.703 co-directional interface.

The G.703 signals are isolated by pulse transformers to 1 kV.

Since the G.703 signals are only of ±1 V magnitude, the cable connecting the P591 unit and the multiplexer must be properly screened against electromagnetic noise and interference. The interface cable should consist of twisted pairs of 24 AWG, overall shielded, and have a characteristic impedance of about 120 Ω. It is generally recommended that the interface cable shield should be connected to the multiplexer frame ground only. The choice of grounding depends however on local codes and practices.

Electrical connections to the P591 unit are made via a standard 28-way Midos connector. Please refer to Installation chapter for the external connection diagram.

The P54x must be set with Clock Source as 'External', refer to section 2.3.3.

2.1.10 Multiplexer link with V.35 electrical interface using auxiliary optical fibers and type P592 interface

A P54x relay with 850 nm short haul optical interface is connected to a P592 unit by 850nm multi-mode optical fiber. Multi-mode fiber type 50/125 μm or 62.5/125 μm is suitable. BFOC/2.5 type fiber optic connectors are used. The P592 unit converts the data between optical fiber and ITU-T compatible V.35 electrical interface. The V.35 output must be connected to an ITU-T compatible V.35 channel on the multiplexer.

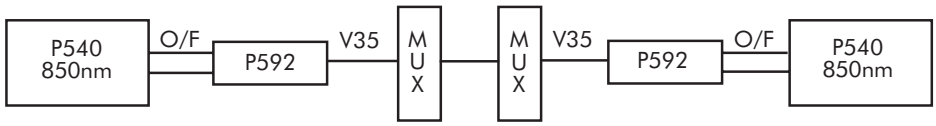

The P592 unit supports the ITU-T Recommendation V.35 interface.

Connections of V.35 signals to the P592 unit are made via a standard female 34 pin 'M' block connector. Since the V.35 signals are either of ±0.55 V or ±12 V magnitude, the cable connecting the unit to the multiplexer must be properly screened against electromagnetic noise and interference. The interface cable should consist of twisted pairs of wires which are shielded, and have a characteristic impedance of about 100 Ω. It is generally recommended that the interface cable shield is connected to the multiplexer frame ground. The choice of grounding depends however on local codes and practices.

The P592 front panel consists of five indicating LEDs and six DIL (dual in line) switches.

The switch labeled ‘Clockswitch’ is provided to invert the V.35 transmit timing clock signal if required.

The switch labeled ‘Fiber-optic Loopback’ is provided to allow a test loopback of the communication signal across the fiber optic terminals. When switched on, the red LED labeled 'Fiber-optic Loopback' is illuminated.

The switch labeled ‘V.35 Loopback’ is provided to allow a test loopback of the communication signal across the X.21 terminals. It loops the incoming V.35 ‘Rx’ data lines internally back to the outgoing V.35 ‘Tx’ data lines. When switched on, the red LED labeled ‘V.35 Loopback’ is illuminated.

The switch labeled ‘DSR’ is provided to select/ignore the DSR (Data Set Ready) handshaking control signal. The red LED labeled DSR Off is extinguished either when DSR is asserted or when overridden by setting the DSR switch On.

The switch labeled ‘CTS’ is provided to select/ignore the CTS (Clear To Send) handshaking control signal. The red LED labeled CTS Off is extinguished either when CTS is asserted or when overridden by setting the CTS switch On.

The switch labeled ‘Data Rate’ is provided to allow the selection of 56 or 64k bits/s data rate, as required by the PCM multiplexing equipment.

The LED labeled ‘Supply Healthy’ is green and provides indication that the unit is correctly powered.

Please refer to Installation chapter for the external connection diagram.

The P54x may be set either with Clock Source as ‘External’ for a multiplexer network which is supplying a master clock signal, or with Clock Source as ‘Internal’ for a multiplexer network recovering signal timing from the equipment. Refer to Section 2.3.3.

2.1.11 Multiplexer link with X.21 electrical interface using auxiliary optical fibers and type P593 interface

The P593 unit supports the ITU-T Recommendation X.21 interface. It is approved as line interface equipment by the British Approvals Board for Telecommunications (BABT) for connection to the services described in this section; License Certificate Number NS/1423/1/T/605362.

A P54x relay with 850 nm short haul optical interface is connected to a P593 unit by 850 nm multi-mode optical fiber. Multi-mode fiber type 50/125 μm or 62.5/125 μm is suitable. BFOC/2.5 type fiber optic connectors are used. The P593 unit converts the data between optical fiber and ITU-T compatible X.21 electrical interface. The X.21 output must be connected to an ITU-T compatible X.21 channel on the multiplexer or ISDN digital data transmission link.

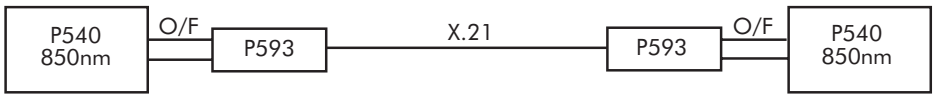

The P54x relays require a permanently open communications channel. Consequently, no communications handshaking is required, and it is not supported in the P593 unit. The signals supported are shown in the following Table.

ITU-T Recommendation X.21 is closely associated with EIA specifications RS422 and RS449. The P593 can be used with RS422 or RS449 communications channels which require only the signals shown overleaf.

ITU-T designation	Description	Connector pin	Direction
-	Case earth	1	-
G	Common return	8	-
T	Transmit data A	2	From P593
T	Transmit data B	9	From P593
R	Receive data A	4	To P593
R	Receive data B	11	To P593
S	Signal element timing A	6	To P593
S	Signal element timing B	13	To P593

X.21 circuits supported by P593 unit

Connections of X.21 signals to the P593 unit are made via a standard male 15 way D-type connector, wired as a DTE device. The interface cable should consist of twisted pairs of 24 AWG, overall shielded, and have a characteristic impedance of about 100 Ω. It is generally recommended that the interface cable shield is connected to the multiplexer frame ground. The choice of grounding depends however on local codes and practices.

Please refer to Installation chapter for the external connection diagram.

The P54x must be set with Clock Source as 'External', refer to section 2.3.3.

The P593 front panel consists of four indicating LEDs and two switches.

The LED labeled 'Supply healthy' is green and provides indication that the unit is correctly powered.

The LED labeled 'Clock' is green and provides indication that an appropriate X.21 signal element timing signal is presented to the unit.

One of the switches is labeled 'Fiber Optic Loopback'. This is provided to allow a test loopback of the communication signal across the fiber optic terminals. When switched on, the red LED labeled 'Fiber Optic Loopback' is illuminated.

The second switch is labeled 'X.21 Loopback'. This is provided to allow a test loopback of the communication signal across the X.21 terminals. It loops the incoming X.21 'Rx' data lines internally back to the outgoing X.21 'Tx' data lines, and also loops the incoming fiber optic 'Rx' data line (via the X.21 signal conversion circuitry) back to the outgoing fiber optic 'Tx' data line. When switched on, the red LED labeled 'X.21 Loopback' is illuminated.

2.1.12 Protection communications connection over unconditioned pilot wires

It is possible to deploy P54x on certain circuits where unconditioned 2-wire or 4-wire pilots are available for communication. To achieve this requires a combination of P590 series optical fiber to electrical interface units together with third-party baseband modems. The application will be restricted by the length and quality of the pilots, with maximum pilot lengths restricted to less than 20 km.

When considering applying a scheme based on P54x and P590 in conjunction with baseband modems, the impact of the modem retrain time on the application needs to be understood before making the decision. Unconditioned 2-wire and 4-wire pilots are generally routed in proximity to the electrical power transmission and distribution feeders that they are helping to protect. As such, they are partial to electro-magnetic interference during switching or fault conditions on the power system. The induced interference on the pilots can cause disruption of the communications signals, and if this is sufficient to cause the synchronization of the communications to be lost, then the modems will have to re-synchronize, or retrain.

NOTE : If communications breaks of up to 10 seconds during switching or fault conditions on the power system cannot be tolerated by the P54x application, a decision to implement a scheme using pilot wire circuits should be reviewed.

2.1.12.1 Pilot isolation

During primary earth faults, the strong magnetic field generated can induce a significant voltage between the pilots and ground (longitudinal voltage). To prevent damage to any equipment connected to the pilot circuit, it must be ensured that the modem can provide an adequate isolation barrier between the pilot itself and all other electrically isolated circuits. Although it may be difficult to accurately predict the induced pilot voltage during an earth fault, the following equations can be used to give an approximation:

Induced voltage for un-screened pilots $\approx 0.3 \times I_F \times L$

Induced voltage for screened pilots $\approx 0.1 \times I_F \times L$

Where:

I_F = Maximum prospective earth fault current in amperes

L = Length of pilot circuit in miles

In cases where the calculated voltage exceeds, typically 60% of the relay/modem isolation level, additional isolation must be added. Schneider Electric offer the PCM-FLÜ 10 kV or 20 kV isolating transformers for use in conjunction with such baseband modems. The choice of 10 kV or 20 kV will depend upon the predicted magnitude of the induced voltage.

OP

Note: The PCM-FLÜ isolating transformer has “a”, “m” and “b” taps on both primary and secondary windings. For all P54x applications, connection must be made between taps ‘a’ and ‘m’, since the frequency range of this winding extends to 2 MHz. Connection between ‘a’ and ‘b’ may result in unreliable communications as the maximum frequency for this tap configuration is 6 kHz. Connection to ‘a’ and ‘m’ taps must be adhered to on both primary and secondary so as to maintain a 1:1 ratio.

2.1.12.2 Baseband modem and P590 specification

Deployment of the Patton “Campus” 1092A baseband modem has been demonstrated with the MiCOM relays and a scheme based on this is presented below.

The Patton “Campus” 1092A baseband modem offers a relatively short retrain time (by baseband modem standards), but it should be noted that this can be as long as ten seconds and the effect of this should be recognized as per the note in section 2.1.12.

On a 2-wire pilot connection a maximum link length of approximately 17 km can be achieved. On a 4-wire pilot, approximately 18 km is possible. These figures are, however, dependent upon the diameter and quality of the pilot wires. The effect of cable diameter on distance is shown in the table below.

Wire guage	Wire diameter	Maximum distance (2-wire connection)	Maximum distance (4-wire connection)
19 AWG	0.9 mm	17.2 km	18.2 km
22 AWG	0.64 mm	11.5 km	12.1 km
24 AWG	0.5 mm	8 km	8.5 km
26 AWG	0.4 mm	5.5 km	5.7 km

For maximum security and performance it is strongly recommended that the pilots use screened twisted pairs of conductors.

The Campus modem should be specified with a G.703 interface and should be used in conjunction with a MiCOM P591.

2.1.12.3 Baseband modem propagation delay

The use of a baseband modem will bring an additional propagation delay time that needs to be taken into account. For a 2-wire connection to the Campus modem the additional delay will be 1.02 ms. For a 4-wire connection to the Campus modem the additional delay will be 1.08 ms.

2.1.12.4 Baseband modem and relay configuration

A scheme configuration using 2-wire connection without additional isolation is shown in the figure below:

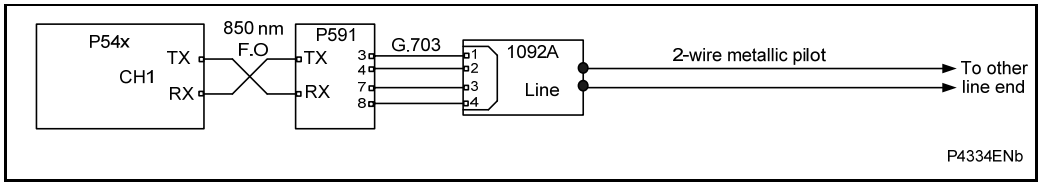

The P54x relays should have their **Prot Comms Mode** set to **standard**, their data rates set to 64kbits/s, and their clock sources set to external.

One of the Campus modems on the pilot wire should be assigned as a **master** and the other assigned as **slave**. The **master** should be set to generate an internal clock, and the **slave** should be set for **receive recovery**. This is achieved by means of setting dual in-line (DIL) switches inside the modem. To implement these settings, the switches should be set as per the tables below:

OP

Master

S1 (on the bottom side of the modem)								
Pin no	1	2	3	4	5	6	7	8
Setting	1	0	1	0	0	1	1	1
S2 (on the bottom side of the modem)								
Pin no	1	2	3	4	5	6	7	8
Setting	0	0	0	0	0	1	0	0
S? (inside the interface card)								
Pin no	1	2	3	4				
Setting	1	0	1	1				

Slave

S1 (on the bottom side of the modem)								
Pin no	1	2	3	4	5	6	7	8
Setting	1	0	1	0	0	1	1	1
S2 (on the bottom side of the modem)								
Pin no	1	2	3	4	5	6	7	8
Setting	0	0	0	0	0	1	0	0
S? (inside the interface card)								
Pin no	1	2	3	4				
Setting	1	0	1	1				

The MiCOM P591 communications interface units do not require any special setting up and the communications should be now configured.

2.1.13 Protection communications scheme set-up

The Scheme Set-up setting selects the connection between the system ends. A two ended system may have a single communication channel between the ends (**2 Terminal** option) or two independent communication channels to achieve dual redundancy (**Dual Redundan**t option). A three ended system is selected by the option **3 Terminal**.

2.1.14 Dual redundant (“hot standby”)

If one of the channels has failed, the communication between the relays can still be maintained by the other healthy channel.

The dual redundant model provides redundancy for communication channels by transmitting and receiving messages over both channels. Each channel is monitored continuously by the relay. The messages from both channels are used to perform the relay functions. If only one channel is available, the messages from this healthy channel are used to perform the relay functions.

The messages are transmitted over the 2 channels alternately. Every message received is validated and processed, so that both channels are continuously monitored.

2.1.15 Three ended system

In the event of a failure of a communication link between two line ends, the correct differential protection will be maintained as long as one relay (master relay) continues to communicate successfully with the other two relays (slave relays). In this degraded mode, the differential protection is performed by the master relay which can intertrip the slaves in the event of a fault being detected.

2.1.16 Protection communications address

The protection communication messages include an address field to ensure correct scheme connection.

There are twenty one options for groups of addresses. Each group is applied to one protection system, two ended or three ended, so there are two or three addresses within a group respectively.

All the address patterns are carefully chosen so as to provide optimum noise immunity against bit corruption. There is no preference as to which address group is better than the other.

The groups of addresses available when **2 Terminal** or **Dual Redundant** scheme is selected are as follows:

	Relay A	**Relay B**
Universal Address	0-0	0-0
Address Group 1	1-A	1-B
Address Group 2	2-A	2-B
Address Group 3	3-A	3-B
Address Group 4	4-A	4-B
Address Group 5	5-A	5-B
Address Group 6	6-A	6-B
Address Group 7	7-A	7-B
Address Group 8	8-A	8-B
Address Group 9	9-A	9-B

	Relay A	Relay B
Address Group 10	10-A	10-B
Address Group 11	11-A	11-B
Address Group 12	12-A	12-B
Address Group 13	13-A	13-B
Address Group 14	14-A	14-B
Address Group 15	15-A	15-B
Address Group 16	16-A	16-B
Address Group 17	17-A	17-B
Address Group 18	18-A	18-B
Address Group 19	19-A	19-B
Address Group 20	20-A	20-B

For two relays to communicate with one another, their addresses have to be in the same address group. One relay should be assigned with address A and the other with address B. For example, if the group 1 address is used, the one relay should be given the address 1-A, and the other relay should be given the address 1-B.

The relay with address 1-A will only accept messages with the 1-A address and will send out messages carrying address 1-B. The relay assigned with address 1-B will only accept messages with address 1-B and will send out messages carrying address 1-A.

The groups of addresses available when **3 Terminal** scheme is selected are as follows:

	Relay A	Relay B	Relay C
Address Group 1	1-A	1-B	1-C
Address Group 2	2-A	2-B	2-C
Address Group 3	3-A	3-B	3-C
Address Group 4	4-A	4-B	4-C
Address Group 5	5-A	5-B	5-C
Address Group 6	6-A	6-B	6-C
Address Group 7	7-A	7-B	7-C
Address Group 8	8-A	8-B	8-C
Address Group 9	9-A	9-B	9-C
Address Group 10	10-A	10-B	10-C
Address Group 11	11-A	11-B	11-C
Address Group 12	12-A	12-B	12-C
Address Group 13	13-A	13-B	13-C
Address Group 14	14-A	14-B	14-C
Address Group 15	15-A	15-B	15-C
Address Group 16	16-A	16-B	16-C
Address Group 17	17-A	17-B	17-C
Address Group 18	18-A	18-B	18-C
Address Group 19	19-A	19-B	19-C
Address Group 20	20-A	20-B	20-C

For three relays to work together as a protection system, their addresses must be in the same group and they should be assigned separately with addresses A, B and C.

They must also have a fixed connection configuration, as shown in Figure 75, in which channel 1 of one relay is connected to channel 2 of another relay.

For example, if the group 1 address is used, addresses 1-A, 1-B and 1-C should be assigned to relays A, B and C respectively. Relay A will only accept messages with address 1-A and will send messages carrying addresses 1-B and 1-C to channel 1 and channel 2 respectively. Relay B will only accept messages with address 1-B and will send messages carrying addresses 1-C and 1-A to channel 1 and to channel 2 respectively. Similarly relay C will only accept messages with address 1-C and will send messages carrying addresses 1-A and 1-B to channel 1 and to channel 2 respectively.

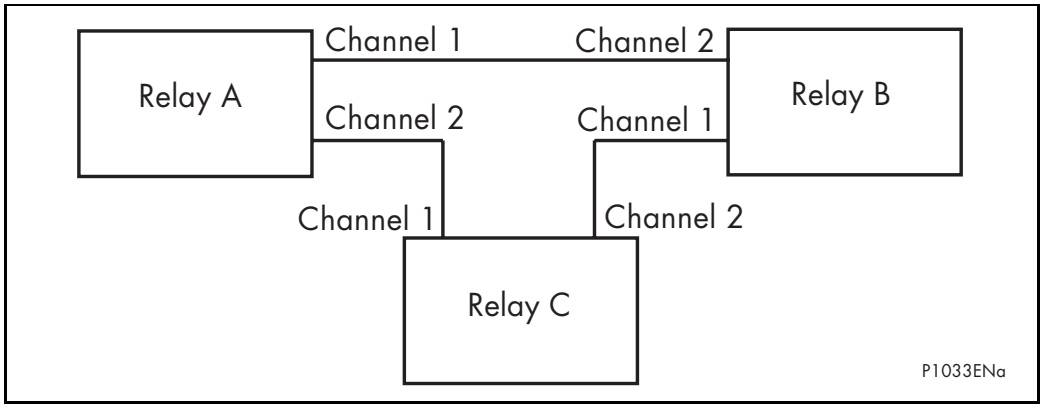

Figure 75 3-terminal system connection

2.1.17 Reconfiguration of three-ended system

This function only applies to relays which are set-up for 3 Terminal operation. The operation depends on the status of the communication channels, the relays in the scheme and various time periods. There are two general areas of operation, these being the change in configuration by a user and that generated by an energization of a relay. The various considerations applying to each of these cases are given below.

Four settings are provided as follows:

- Three Ended
- Two Ended Local and Remote 1 (L & R1)
- Two Ended Local and Remote 2 (L & R2)
- Two Ended Remote 1 and Remote 2 (R1 & R2)

Remote 1 and Remote 2 relate to protection signaling channel 1 and 2 respectively.

The operation of the reconfiguration is described in 2.1.18 and 2.1.19.

2.1.18 User reconfiguration

This covers the normal set-up of the relays into a 2-ended or 3-ended scheme depending on the state of the protected line and the relays. The facilities provided allow the user to initially use two relays to protect a two ended line and later to upgrade the scheme to three ended using a further relay. It also allows one end of a three ended scheme to be isolated and the other two ends to operate as a two ended scheme. This allows tests to be performed on the end that has been isolated and also allows for that relay to be removed altogether.

The change in configuration is enabled by two external interlocks and by the current state of the relay and its communications. If the scheme is changed from 3-ended to 2-ended, it is considered to be a reconfigure command. If the scheme is changed from 2-ended to 3-ended, it is considered to be a restore command. The checks performed for a reconfiguration are slightly different to those for a restore.

OP

The operation of the change configuration logic is as follows:

1. The configuration setting is changed
2. The relay detects the change in setting and attempts to implement the new setting
3. If the relay configuration is 2-ended and the new setting is also 2-ended then the relay will block the change and issue a configuration error alarm

If the relay configuration is 2-ended and the new setting is 3-ended then the relay will check that all the communications are healthy and send out the restore command to the other relays. It will then check that the scheme has stabilized at 3-ended after one second.

If any of the communications in the scheme were failed or if the scheme has not stabilized at 3-ended then the relay will return to its original 2-ended setting and issue a configuration error alarm.

If the scheme did stabilize at 3-ended then the Re-configuration setting will be updated.

If the relay configuration is 3-ended and the new setting is 2-ended L & R1 then the relay will first check that the two interlock opto-inputs, **Inhibit Diff** and **Interlock**" are energized (note that the **Inhibit Diff** opto-input will inhibit the differential tripping, but the backup protection can still operate the trip outputs). These inputs are allocated to opto-inputs L3 and L4 in the default programmable scheme logic. The relay then checks that the communication with Remote 1 relay is healthy and sends out the command to the remote relays. It will then check that the scheme has stabilized at 2-ended L & R1after one second.

If the interlocks are not energized or the communication with Remote 1 relay has failed or the scheme does not stabilize at 2-ended L & R1 then the relay will return to 3-ended and will issue a configuration error alarm.

If the scheme did stabilize at 2-ended L & R1 then the Re-configuration setting will be updated.

If the relay configuration is 3-ended and the new setting is 2-ended L & R2 then the relay reacts similarly to a 2-ended L & R1 reconfiguration.

If the relay configuration is 3-ended and the new setting is 2-ended R1 & R2 then the relay reacts similarly to a 2-ended L & R1 reconfiguration.

2.1.19 Energization reconfiguration

This type of configuration occurs when a relay is energized and the relay attempts to go into a configuration compatible with the other relays in the scheme. As far as possible the scheme will go to that which the user set up. There are, however, certain conditions which may prevent this from occurring.

The configuration that the relay takes up at power on is governed by the following factors:

1. The scheme currently configured on the remote relays
2. The status of the communication links
3. The configuration stored in non volatile memory before power down

Upon energization of a relay, the following events occur:

4. The relay checks whether any messages are arriving. If so then the configuration command in the first messages to arrive will be used as the relay configuration. This is subject to certain conditions. If the relay has a choice of 2-ended and 3-ended, it will assume the 2-ended scheme unless both incoming commands are 3-ended. If all three relays are 3-ended then they will remain so.

5. If no messages arrive from either end then after one second the relay will change to the configuration that was last selected, i.e. the configuration before power down. Once messages begin to arrive again, the relay will check them for validity against the current scheme. If one relay is 3-ended and the other is 2-ended then the configuration will change to 2-ended. If both are 3-ended or the same 2-ended scheme then that will become the configuration. If two relays have different 2-ended configurations then they are unable to determine which one to use and will each generate a configuration error alarm and each relay will remain in its current configuration. This condition can be cleared by restoring the relays or by removing the supply to the relay with the incorrect configuration.

6. If all the relays in a scheme are energized simultaneously then the configuration will revert to 3-ended if all the communication channels are healthy. This occurs because all the relays are waiting to be told their configuration and all default to 3-ended. This is a very unlikely event in normal use.

7. In cases where a communication channel has only half failed i.e. the receive channel has failed but not the transmit channel, then there may be configuration errors on power up due to the fact that the relays are not communicating correctly. If the status is available via the third relay and healthy communications via its two channels then the scheme will stabilize correctly.

2.2 InterMiCOM^{64} introduction

Eight digital signals from local relay to the remote relay can be sent by using Programmable InterMiCOM^{64} (IM64) teleprotection available in MiCOM P54x. This teleprotection uses the protection communication channel described in section 2.1.

In this scheme the signaling channel is used to convey simple ON/OFF data (from a local protection device) thereby providing some additional information to a remote device which can be used to accelerate in-zone fault clearance and/or prevent out-of-zone tripping.

2.2.1 Definition of teleprotection commands

The decision to send a command is made by a local protective relay operation, and three generic types of signal are available:

Intertripping

In intertripping (direct or transfer tripping applications), the command is not supervised at the receiving end by any protection relay and simply causes CB operation. Since no checking of the received signal by another protection device is performed, it is absolutely essential that any noise on the signaling channel isn't seen as being a valid signal. In other words, an intertripping channel must be very secure.

Permissive

In permissive applications, tripping is only permitted when the command coincides with a protection operation at the receiving end. Since this applies a second, independent check before tripping, the signaling channel for permissive schemes do not have to be as secure as for intertripping channels.

Blocking

In blocking applications, tripping is only permitted when no signal is received but a protection operation has occurred. In other words, when a command is transmitted, the receiving end device is blocked from operating even if a protection operation occurs. Since the signal is used to prevent tripping, it is imperative that a signal is received whenever possible and as quickly as possible. In other words, a blocking channel must be fast and dependable.

The requirements for the three channel types are represented pictorially in Figure 76.

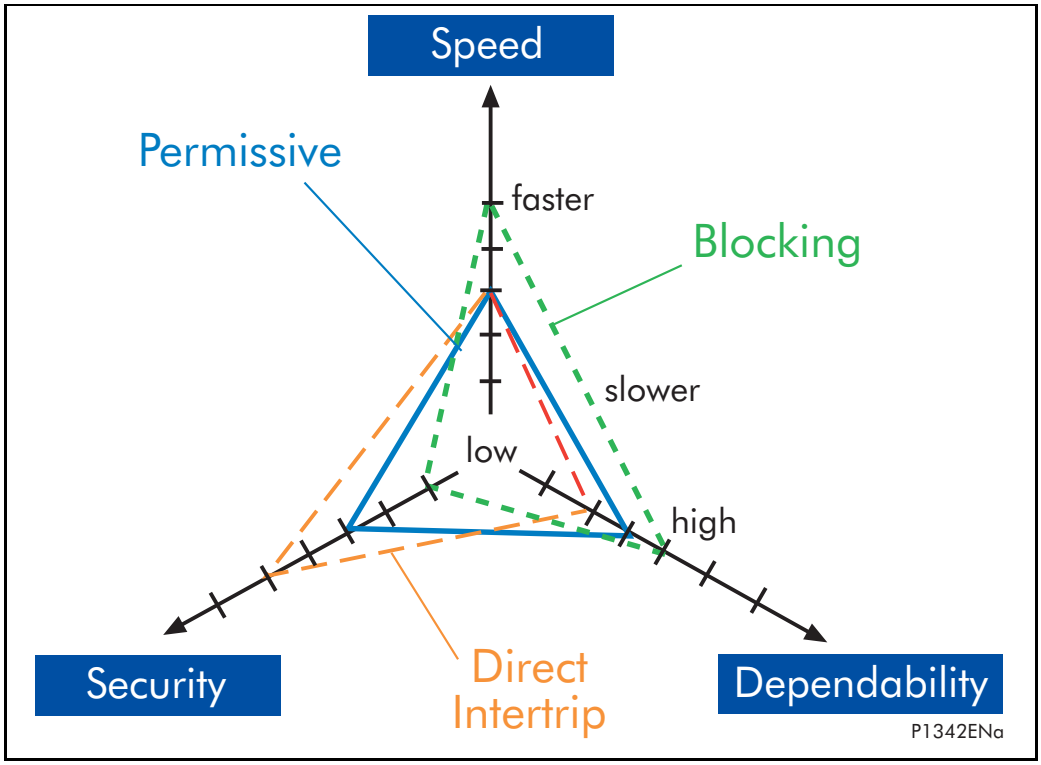

OP

Figure 76 Pictorial comparison of operating modes

This diagram shows that a blocking signal should be fast and dependable; a direct intertrip signal should be very secure and a permissive signal is an intermediate compromise of speed, security and dependability.

In InterMiCOM^{64} applications, the framing and error checking of a single command message is sufficient to meet the security of a permissive application, whilst the speed is sufficiently fast to meet the needs of a blocking scheme. Accordingly in InterMiCOM^{64} applications, there is no differentiation between blocking commands or permissive commands, so that only signals being used for direct intertripping with higher security requirements need to be differentiated from those in permissive (or blocking) schemes.

2.2.2 General features & implementation

InterMiCOM^{64} provides a direct fiber output from the relay's co-processor board that can be connected either directly to the protection at the opposite end(s) or through a MUX device as describe on section 2.1

InterMiCOM^{64} can work:

- With Differential protection (In this case differential protection is enabled) or
- Standalone (In this case differential protection is disabled and InterMiCOM^{64} is enabled)

The number of available teleprotection commands is 8. In Dual redundant schemes 8 commands per channel are transmitted to and received from the remote end. In 3 ended configurations, 8 commands are transmitted bidirectional between each and every pair of relays. Unique relay addressing is available to prevent any spurious operation should a multiplexer inadvertently fall out of step and misroute messages.

2.2.3 Functional assignment

The settings to control the mode of the intertrip signals are made using the relay's menu software. In addition to this, it is necessary to assign InterMiCOM input and output signals in the relay Programmable Scheme Logic (PSL) editor. Two icons are provided on the PSL editor of MiCOM S1 (S1 Studio) for **Integral tripping In** and **Integral tripping out** which can be used to assign the eight intertripping commands. The example shown below in Figure 77 shows a **Control Input_1** connected to the **Intertrip O/P1** signal which would then be transmitted to the remote end. At the remote end, the **Intertrip I/P1** signal would then be assigned within the PSL. In this example, we can see that when intertrip signal 1 is received from the remote relay, the local end relay would operate an output contact, R1.

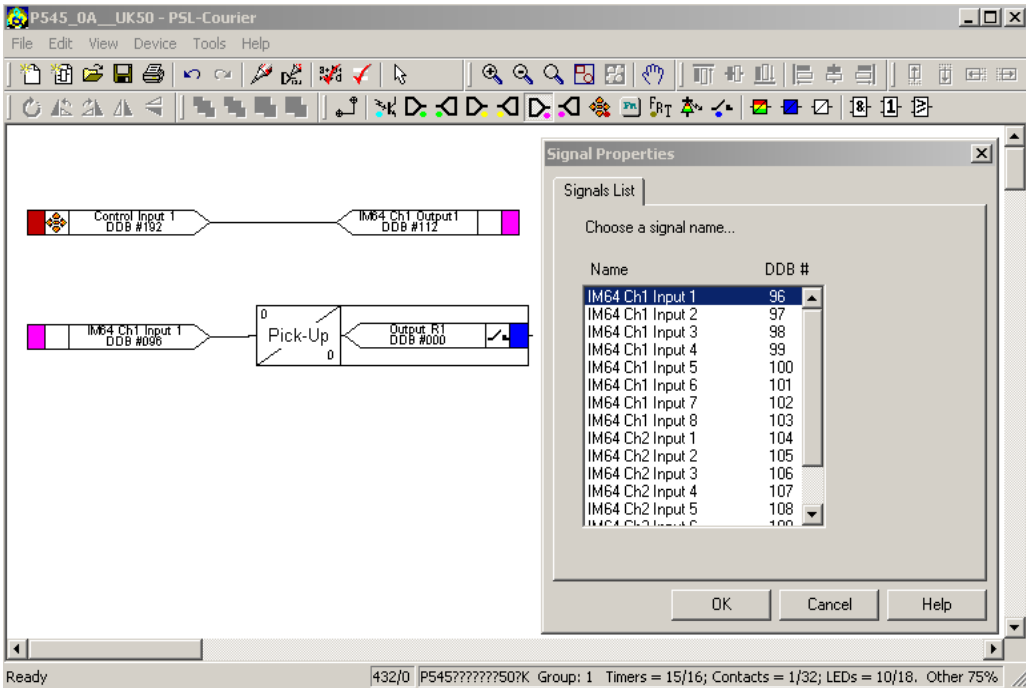

Figure 77 Example assignment of signals within the PSL

Note: When an InterMiCOM signal is sent from the local relay, only the remote end relay will react to this command. The local end relay will only react to InterMiCOM commands initiated at the remote end and received locally, and vice-versa. InterMiCOM can, therefore, be described as a duplex teleprotection system.

2.3 InterMiCOM^{64} statistics & diagnostics

It is possible to hide the channel diagnostics and statistics from view by setting the **Ch Statistics** and/or **Ch Diagnostics** cells to **Invisible**. All channel statistics are reset when the relay is powered up, or by user selection using the **Reset Statistics** cell.

2.3.1 InterMiCOM^{64} scheme setup - application

InterMiCOM^{64} can be applied to either 2 or 3 ended configurations. By simply mapping the Tx and Rx signals using the Programmable Scheme Logic (PSL). For mapping of the InterMiCOM^{64} commands in the PSL please refer to Section 2.2.3

For security reasons, two MiCOM P54x relays may be connected in a Dual Redundant scheme, in which case both channels will be in use. This scheme is also known as a 'Hot Standby' scheme but it should be noted that Channel 1 has no priority over Channel 2 - the data that arrives first will be stored in the buffer and used in the PSL, whilst the same data received via the slower channel will simply be discarded.

The InterMiCOM^{64} connection for a three ended application is shown in Figure 78.

OP

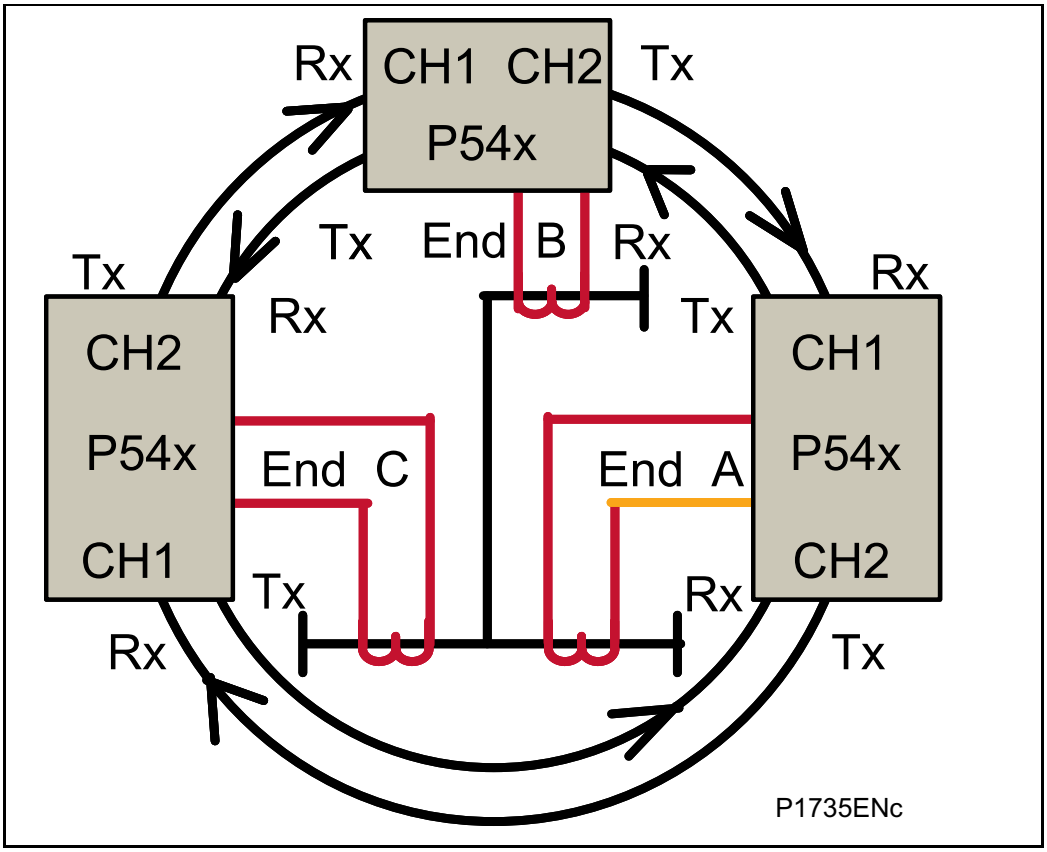

Figure 78 Triangulated InterMiCOM64 application

If InterMiCOM^{64} is working as standalone feature (i.e. Differential protection is disabled and InterMiCOM^{64} is enabled), a pass-through feature allows the scheme to remain in service in case of one channel outage. It should be noted that in the case when one leg of the communication triangle fails, i.e. channel A-C becomes unavailable, the InterMiCOM^{64} will continue to provide the full teleprotection scheme between all 3 ends. In this new 'Chain' topology, relays A and C will receive and transmit teleprotection commands via relay B, which means that the original 'Triangle' topology is not necessary. The retransmitting done by relay B (A-B-C and C-B-A) provides the self-healing for the lost links A-C and C-A).

Some users may apply Chain topology also as a means to save cost (two legs may be cheaper to install than full triangulation).

2.3.1.1 Teleprotection communications address

The protection communication messages include an address field to ensure correct scheme connection. There are twenty one options for groups of addresses. The description of them is exactly the same as per differential protection addresses described on section 2.1.16.

2.3.1.2 IMx fallback mode

In case the received message is corrupted due to ether channel failure or lost synchronization, the user can pre-define the status of each command individually as Latched or Default. The new status will take effect after the 'Channel Timeout' user settable time has elapsed. The "Default" mode allows a failsafe logic status to be applied.

OP

2.3.1.3 InterMiCOM[64] and differential communications

The Differential function can be globally enabled or disabled using the CONFIGURATION /Phase Diff/ Enabled-Disabled setting.

If the Differential function is enabled, communication messages between the relays will have the complete differential format including currents and additional bias. In addition, the GROUP X/PHASE DIFF/Enabled-Disabled setting will be displayed allowing the differential functionality to be enabled or disabled on a per group basis.

If the Differential function is disabled in Configuration column, a CONFIGURATION/InterMiCOM[64]/Enabled-Disabled setting will be displayed. The InterMiCOM[64] function could be enabled and the communication messages between the relays will have a different format compared with those of the differential function. The message format will include digital signals only and will be shorter and faster.

If differential protection in group is disabled, the InterMiCOM[64] function can work with the differential message format or with an inherent stand-alone format where only digital signals are transmitted. The stand-alone message format has a pass though feature and is slightly faster than using the InterMiCOM[64] function with the differential message format.

2.3.2 Permissive Intertrip

The P54x relays include a facility to send a permissive intertrip command over the protection communication channel, as shown in Figure 79.

OP

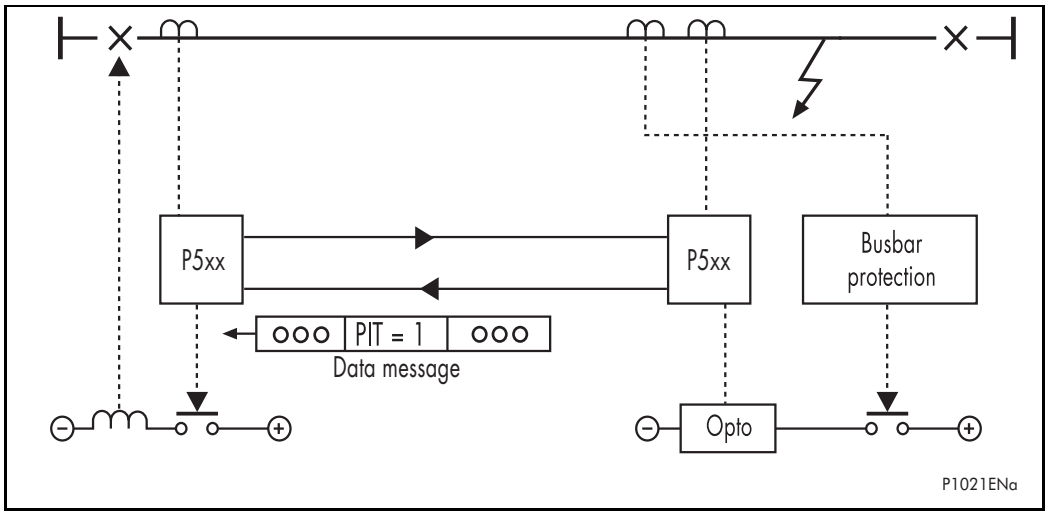

Figure 79 Permissive intertrip

An opto input can be assigned for this purpose. When the associated opto input is energized at END B, the PIT flag is set in the communication message. Upon receipt of this message, the relay at END A initiates the PIT timer which times out and trips the circuit breaker, providing that the Remote or Local current (according to setting PIT I selection/ Remote or Local) remains above its basic current threshold setting (Is1), times out, the relay closes it's three phase differential trip contacts. The remote relay provides indication of the permissive intertrip.

The permissive intertrip timer is settable between 0 and 200 ms. This time should be set to provide discrimination with other protection. For example, in Figure 79, the time delay should be set to allow the busbar protection to clear the fault in the event of a genuine busbar fault. A typical setting may be 100 - 150 ms.

2.3.3 Clock source

A clock source is required to synchronize data transmissions between the system ends. This may be provided either by the P54x relays (internal) or may be a function of the telecommunications equipment (external). The P54x relays have a setting for each of Channel 1 and Channel 2 to set the Clock Source to either “Internal” or “External” according to the communications system configuration.

This setting is not applicable if IEEE C37.94 mode selected.

2.3.4 Communication alarm

A communication alarm is raised by the relay if the message error rate exceeds the setting value under PROT COMMS/IM64/ Alarm Level (default = 25%) and persists over a defined period of time (refer to section 2.1.6 below). This is equivalent to a Bit Error Rate (BER) of 1.5×10^{-3}.

A communication alarm is also raised if the received message indicates failure of the signaling channel at the remote end.

2.3.5 Communication error statistics

OP

To aid the bit error evaluation of the communication link, communication error statistics are kept by the relay. These give the number of Errored messages detected, the number of Lost Messages, and the number of Valid Messages received for each of the two channels. The number of errored messages detected complies with ITU-T G8.21 and is as follows:

Number of errored seconds	Number of seconds containing 1 or more errored or lost messages
Number of severely errored seconds	Number of seconds containing 31 or more errored or lost messages
Number of degraded minutes	Number of minutes containing 2 or more errored or lost messages
Note any severely errored seconds are ignored when working out the minute intervals	

The number of lost messages recorded is intended as an indicator for noises under normal communication conditions and not for recording long communication breaks. The lost message count is accumulated by incrementing a counter when a message is rejected by the Error code check, message length check and the sequential time tag check.

The error statistics are automatically cleared on power-up. They can also be cleared using the Clear Statistics setting in Measurements column of the menu.

2.3.6 Communications delay timer

The communications delay timer is the maximum difference in the measured channel propagation delay time between consecutive messages that the relay will tolerate before switching the settings, as described in section 2.1.6.

This setting is factory set to 350 μs. It should be increased to a suitable value if the propagation delay time is expected to vary considerably such as in the case of a microwave link with multiple repeaters.

2.3.7 Communications fail timer

The communication fail timer is the time during which communication errors must be continuously detected before the channel is declared failed. This governs the implementation of the communication alarm and the ‘Protection Scheme Inoperative’ alarm. The setting is normally set to the maximum of 10 seconds so that the two alarms will not be affected by short bursts of noises or interruptions. The communication fail time setting however may be set to a lower value of say 200 or 300 ms if the alarm contacts are to be used for enabling standby protection, or to signal a change-over to reserve communication facilities should the communication link become noisy or fail completely.

2.3.8 Communications fail mode

The Communications Fail Mode is used to select the channel(s) responsible for raising the communication alarm when configured for dual redundant communications. Three options are available: 'Ch 1 Failure', 'Ch 2 Failure', Ch1 or Ch 2 Fail' and Ch1 and Ch 2 Fail'. If 'Ch 1 Failure' is selected, the communication alarm will only be raised if channel 1 has failed. If 'Ch 2 Failure' is selected, the communication alarm will only be raised if channel 2 has failed. If 'Ch 1 or Ch 2 Fail' is selected, the communication alarm will be raised if either channel has failed.

2.3.9 MiCOM P594 global positioning system (GPS) synchronizing module

MiCOM P54x Current Differential relays can use a satellite-derived one pulse per second synchronizing signal via a MiCOM P594 GPS Module.

A separate technical guide (P594 EN M) is available in support of this device, and should be consulted for operational details.

3. OPERATION OF NON PROTECTION FUNCTIONS

The protection functionality of the P543, P544, P545, and P546 are very similar, and a common operational description can be applied. For the non-protection functions, some of the functionality is the same and, similarly, a common operational description can be applied. The principal difference between different models is that the P543 and P545 can control only a single circuit breaker,, whereas the P544 and P546 can control two.

For this reason, the circuit breaker monitoring and control software differs between the P543/P545 and the P544/P546, and a common operational description cannot be applied.

This section describes the operation of the non-protection functions common to all models and that are not associated with circuit breaker monitoring and control.

Separate sections are assigned to describe the P543/P545 operational control of a single circuit breaker, and the P544/P546 operational control of dual circuit breakers.

3.1 Voltage transformer supervision - fuse fail

The voltage transformer supervision (VTS) feature is used to detect failure of the ac voltage inputs to the relay. This may be caused by internal voltage transformer faults, overloading, or faults on the interconnecting wiring to relays. This usually results in one or more VT fuses blowing. Following a failure of the ac voltage input there would be a misrepresentation of the phase voltages on the power system, as measured by the relay, which may result in maloperation.

The VTS logic in the relay is designed to detect the voltage failure, and automatically adjust the configuration of protection elements whose stability would otherwise be compromised. A time-delayed alarm output is also available.

A setting **VTs Connected** Yes/No (Voltage transformers connected to the relay) under CT AND VT RATIOS will:

When set to yes this setting will have no effect.

When set to No it causes the VTS logic to set the VTS Slow Block and VTS Fast Block DDBs, but not raise any alarms. It will also override the VTS enabled setting should the user set it. The effect of this is to stop the pole dead logic working incorrectly with the presence of no voltage and no current but not the CB open part of the logic and also block the distance, under voltage and other voltage dependant functions.

VTS can be declared by a mini circuit breaker (MCB) status input, by an internal logic using relay measurement or both. A setting **VTS Mode** (Measured + MCB /Measured Only/MCB Only) is available to select the method to declare VT failure.

For the measured method, there are three main aspects to consider regarding the failure of the VT supply. These are defined below:

1. Loss of one or two phase voltages
2. Loss of all three phase voltages under load conditions
3. Absence of three phase voltages upon line energization

3.1.1 Loss of one or two phase voltages

The VTS feature within the relay operates on detection of negative phase sequence (nps) voltage without the presence of negative phase sequence current. This gives operation for the loss of one or two phase voltages. Stability of the VTS function is assured during system fault conditions, by the presence of nps current. The use of negative sequence quantities ensures correct operation even where three-limb or 'V' connected VT's are used.

Negative Sequence VTS Element:

The negative sequence thresholds used by the element are V2 = 10 V and I2 = 0.05 to 0.5 In settable (defaulted to 0.05 In).

3.1.2 Loss of all three phase voltages under load conditions

Under the loss of all three phase voltages to the relay, there will be no negative phase sequence quantities present to operate the VTS function. However, under such circumstances, a collapse of the three phase voltages will occur. If this is detected without a corresponding change in any of the phase current signals (which would be indicative of a fault), then a VTS condition will be raised. In practice, the relay detects the presence of superimposed current signals, which are changes in the current applied to the relay. These signals are generated by comparison of the present value of the current with that exactly one cycle previously. Under normal load conditions, the value of superimposed current should therefore be zero. Under a fault condition a superimposed current signal will be generated which will prevent operation of the VTS.

The phase voltage level detectors are fixed and will drop off at 10 V and pickup at 30 V.

The sensitivity of the superimposed current elements is fixed at 0.1 In.

3.1.3 Absence of three phase voltages upon line energization

If a VT were inadvertently left isolated prior to line energization, incorrect operation of voltage dependent elements could result. The previous VTS element detected three phase VT failure by absence of all 3 phase voltages with no corresponding change in current. On line energization there will, however, be a change in current (as a result of load or line charging current for example). An alternative method of detecting 3 phase VT failure is therefore required on line energization.

The absence of measured voltage on all 3 phases on line energization can be as a result of 2 conditions. The first is a 3 phase VT failure and the second is a close up three phase fault. The first condition would require blocking of the voltage dependent function and the second would require tripping. To differentiate between these 2 conditions an overcurrent level detector (VTS I> Inhibit) is used which will prevent a VTS block from being issued if it operates. This element should be set in excess of any non-fault based currents on line energization (load, line charging current, transformer inrush current if applicable) but below the level of current produced by a close up 3 phase fault. If the line is now closed where a 3 phase VT failure is present the overcurrent detector will not operate and a VTS block will be applied. Closing onto a three phase fault will result in operation of the overcurrent detector and prevent a VTS block being applied.

This logic will only be enabled during a live line condition (as indicated by the relays pole dead logic) to prevent operation under dead system conditions i.e. where no voltage will be present and the VTS I> Inhibit overcurrent element will not be picked up.

Note: VTS I> Inhibit logic is equally applicable for the situation where loss of all three phase voltages occurs under load conditions. (Refer section 3.1.2).If the setting of VTS I> Inhibit is less than the load current and if three phase VT fails during normal load, VTS block will not be applied. Hence it is important that the **VTS I> Inhibit** is always set above the expected load current.

3.1.4 VTS logic

The relay may respond as follows, on operation of any VTS element:

- VTS set to provide alarm indication only;
- Optional blocking of voltage dependent protection elements;
- Optional conversion of directional overcurrent elements to non-directional protection (available when set to Blocking mode only). These settings are found in the Function Links cell of the relevant protection element columns in the menu.

The VTS I> Inhibit or VTS I2> Inhibit elements are used to override a VTS block in event of a fault occurring on the system which could trigger the VTS logic. Once the VTS block has been established, however, then it would be undesirable for subsequent system faults to override the block. The VTS block will therefore be latched after a user settable time delay 'VTS Time Delay'. Once the signal has latched then two methods of resetting are available. The first is manually via the front panel interface (or remote communications) provided the VTS condition has been removed and secondly, when in 'Auto' mode, by the restoration of the 3 phase voltages above the phase level detector settings mentioned previously.

A VTS indication will be given after the VTS Time Delay has expired. In the case where the VTS is set to indicate only the relay may potentially maloperate, depending on which protection elements are enabled. In this case the VTS indication will be given prior to the VTS time delay expiring if a trip signal is given.

OP

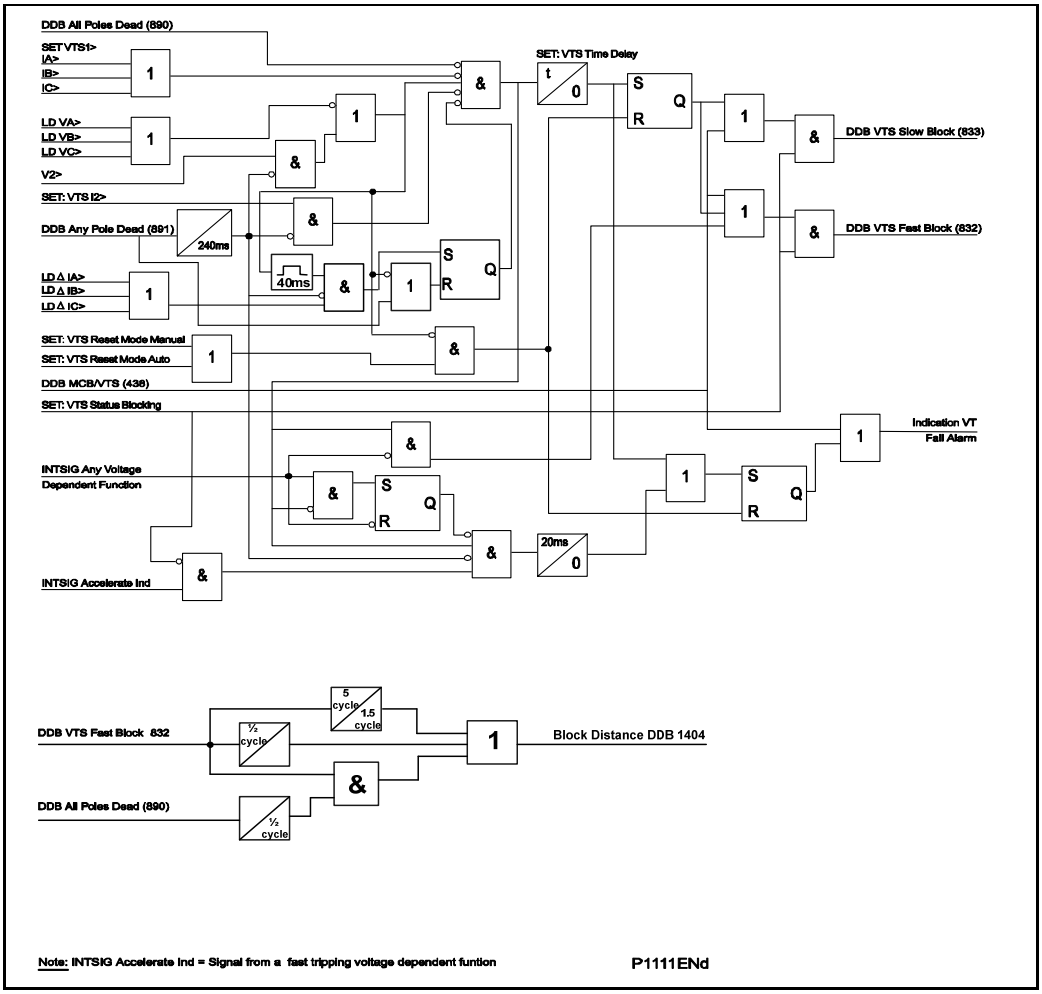

Figure 80 VTS logic

This scheme is also able to correctly operate under very low load or even no load conditions, by the combination of time delayed signals derived from the DDB signals **VTS Fast block** and **all Poles Dead**, to generate the **Block Distance** DDB.

Note: All non-distance elements are blocked by the "VTS Fast Block" DDB.

Where a miniature circuit breaker (MCB) is used to protect the voltage transformer ac output circuits, it is common to use MCB auxiliary contacts to indicate a three phase output disconnection. As previously described, it is possible for the VTS logic to operate correctly without this input. However, this facility has been provided for compatibility with various utilities current practices. Energizing an opto-isolated input assigned to **DDB: MCB/VTS** on the relay will therefore provide the necessary block.

3.2 Current transformer supervision

The current transformer supervision feature is used to detect failure of one or more of the ac phase current inputs to the relay. Failure of a phase CT or an open circuit of the interconnecting wiring can result in incorrect operation of any current operated element. Additionally, interruption in the ac current circuits risks dangerous CT secondary voltages being generated.

MiCOM P54x has two methods to achieve CT supervision feature (CTS). The first method called differential (I diff) method uses the ratio between positive and negative sequence currents to determine CT failure. Is non voltage dependant and relies on channel communications to declare a CTS condition. The second method called standard method relies on local measurements of zero sequence currents and voltages to declare CTS. The user should select what method to use according to the application.

Both methods could be applied in parallel. The setting options per each setting group are: CTS Disabled/ Idiff CTS/ Standard CTS/ (Idiff+Standard). It should be noted that the 'CTS Status' (Restrain/Indication), 'CTS Reset Mode' (Manual/Auto) and 'CTS Time Delay' are common for both algorithms.

3.2.1 Differential CTS (no need of local voltage measurements to declare CTS)

Differential CT supervision scheme is based upon measurement of the ratio of I2 to I1 at all line ends. When this ratio is small (theoretically zero), one of four conditions is present:

- The system is unloaded - both I2 and I1 are zero
- The system is loaded but balanced - I2 is zero
- The system has a three phase fault present - I2 is zero
- There is a genuine 3 phase CT problem - unlikely, would probably develop from a single or two phase condition

If the ratio is non-zero, we can assume one of two conditions are present:

- The system has an asymmetric fault - both I2 and I1 are non-zero
- There is a 1 or 2 phase CT problem - both I2 and I1 are non-zero

Any measurement at a single end doesn't provide any more information than this, but if the ratio is calculated at all ends and compared, the MiCOM P54x assumes:

- If the ratio is non-zero at more than two ends, it is almost certainly a genuine fault condition and so the CT supervision is prevented from operating.
- If the ratio is non-zero at one end, there is a chance of either a CT problem or a single-end fed fault condition.

A second criteria looks to see whether the differential system is loaded or not. For this purpose MiCOM P54x looks at the positive sequence current I1. If load current is detected at one-end only, MiCOM P54x assumes that this is an internal fault condition and prevents CTS operation, but if load current is detected at two or more ends, CTS operation is permitted.

There are two modes of operation, Indication and Restrain. In Indication mode, a CTS alarm is raised but no effect on tripping. In Restrain mode, the differential protection is blocked during 20 ms after CT failure detection and then the setting for the Current Differential is raised to above load current. The CTS covers 2 sets of CTs in P544 and P546 as well as one set of CTs on P543 and P545.

In order to achieve correct operation of the scheme, it is necessary that differential CTS is enabled at each end of the protected zone.

Differential current transformer supervision (Differential CTS) in P543 - P546 models suffix K are only compatible with P543 - P546 models suffix K.

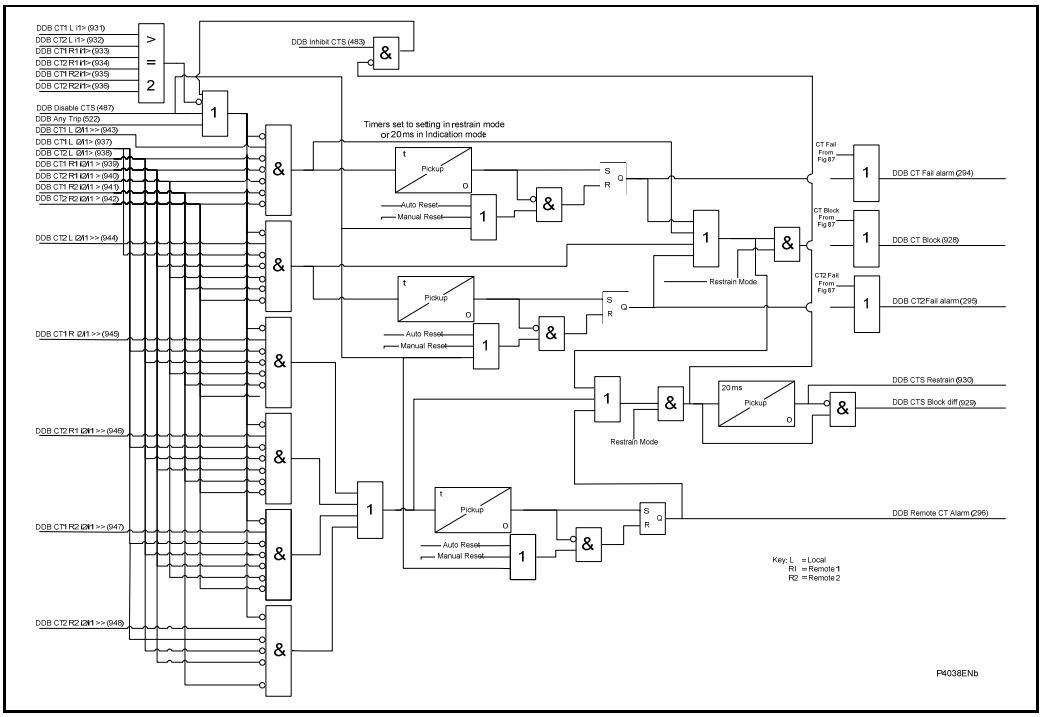

Figure 81 Differential CTS

3.2.2 Standard CTS (voltage dependant CTS no need of communications to declare CTS)

The standard CT supervision feature (CTS) operates on detection of derived zero sequence current, in the absence of a corresponding derived zero sequence voltage that would normally accompany it. The voltage transformer connection used must be able to refer zero sequence voltages from the primary to the secondary side. Therefore, this element should only be enabled where the VT is of five limb construction, or comprises three single phase units, and has the primary star point earthed.

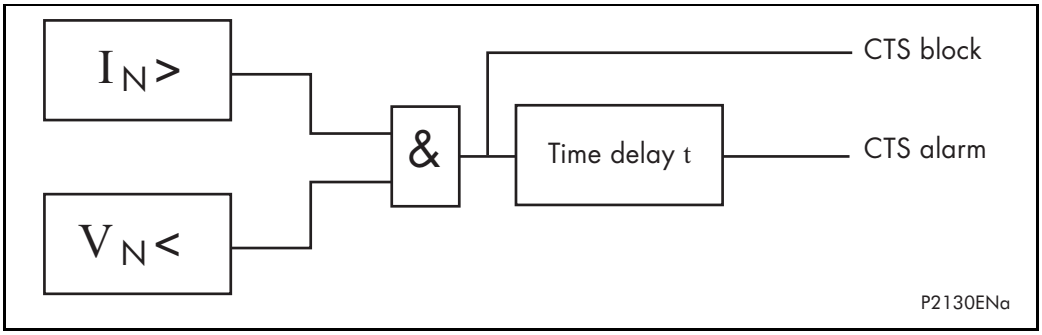

Figure 82 Voltage dependant CTS principle scheme

OP

Operation of the element will produce a time-delayed alarm visible on the LCD, an event record and a DDB 294: CT Fail Alarm, with an instantaneous block (DDB 928: CTS Block) for inhibition of protection elements see Figure 82 above.

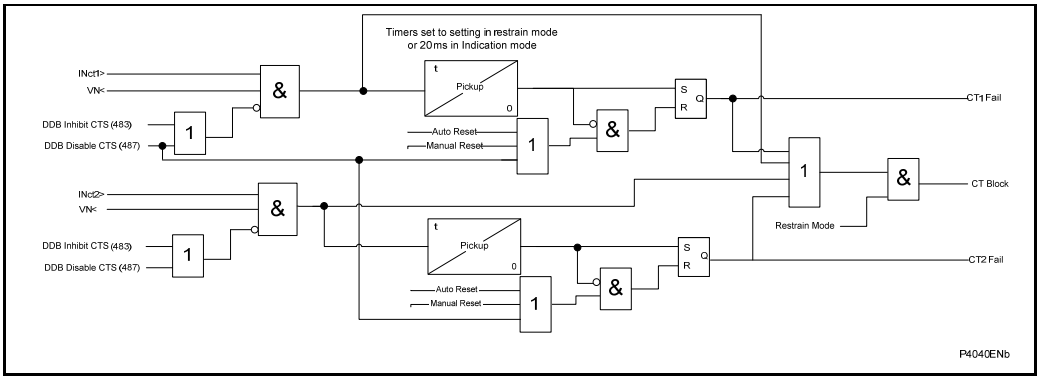

Figure 83 Standard CTS

3.2.3 CTS blocking

The standard and differential methods will always block protection elements operating from derived quantities: Broken Conductor, Earth Fault and Neg Seq O/C. The differential method will also restrain the differential protection. Other protection functions such as DEF can be selectively blocked by customizing the PSL, gating DDB 928: CTS Block (originated by either method) or DDB 929 CTS Block Diff with the protection function logic.

OP

3.3 Transformer magnetizing inrush detector

In section 1.1.4.1 **Transformer magnetizing inrush** and **High set differential setting** it is described how inrush is taking into account by the differential protection. As this inrush restrain technique is only valid for differential protection, there is a need of a separate inrush detector in order to prevent operation of other functions if needed.

The MiCOM P54x distance protection has been designed as a fast protection relay. It is therefore not desirable that distance zones should be slowed by forcing them to wait for a detection/no detection of transformer inrush current (in general applications). For this reason, the relay has no second harmonic blocking of the distance elements in the standard protection algorithms.

However should a user wish to employ, for example, a long Zone 1 reach through a transformer, it is possible to implement harmonic blocking for magnetizing inrush current. Provided that the Inrush Detection is **Enabled**, the user can then pick up the output of the I(2)/I(1) detectors in the Programmable Scheme Logic. The user can then assign blocking functions in the PSL as necessary, because as stated above this detector does not directly route into the relay's fixed logic.

3.4 Function keys

The P54x relays offers users 10 function keys for programming any operator control functionality such as auto-reclose ON/OFF, earth fault1 ON/OFF etc. via PSL. Each function key has an associated programmable tri-color LED that can be programmed to give the desired indication on function key activation.

These function keys can be used to trigger any function that they are connected to as part of the PSL. The function key commands can be found in the 'Function Keys' menu (see Settings chapter, *P54x/EN ST*). In the 'Fn. Key Status' menu cell there is a 10 bit word which represent the 10 function key commands and their status can be read from this 10 bit word.

In the programmable scheme logic editor 10 function key signals, DDB 1096 - 1105, which can be set to a logic 1 or On state, as described above, are available to perform control functions defined by the user.

The **Function Keys** column has ‘Fn. Key n Mode’ cell which allows the user to configure the function key as either ‘Toggled’ or ‘Normal’. In the ‘Toggle’ mode the function key DDB signal output will remain in the set state until a reset command is given, by activating the function key on the next key press. In the ‘Normal’ mode, the function key DDB signal will remain energized for as long as the function key is pressed and will then reset automatically. A minimum pulse duration can be programmed for a function key by adding a minimum pulse timer to the function key DDB output signal.

The **Fn. Key n Status** cell is used to enable/unlock or disable the function key signals in PSL. The ‘Lock’ setting has been specifically provided to allow the locking of a function key therefore preventing further activation of the key on consequent key presses. This allows function keys that are set to ‘Toggled’ mode and their DDB signal active ‘high’, to be locked in their active state therefore preventing any further key presses from deactivating the associated function. Locking a function key that is set to the **Normal** mode causes the associated DDB signals to be permanently off. This safety feature prevents any inadvertent function key presses from activating or deactivating critical relay functions.

The **Fn. Key Labels** cell makes it possible to change the text associated with each individual function key. This text will be displayed when a function key is accessed in the function key menu, or it can be displayed in the PSL.

The status of the function keys is stored in battery backed memory. In the event that the auxiliary supply is interrupted the status of all the function keys will be recorded. Following the restoration of the auxiliary supply the status of the function keys, prior to supply failure, will be reinstated. If the battery is missing or flat the function key DDB signals will set to logic 0 once the auxiliary supply is restored. Please also note the relay will only recognize a single function key press at a time and that a minimum key press duration of approximately 200 msec. is required before the key press is recognized in PSL. This deglitching feature avoids accidental double presses.

3.5 Setting groups selection

The setting groups can be changed either via opto inputs, via a menu selection, via the hotkey menu or via function keys. In the Configuration column if 'Setting Group - select via optos' is selected then any opto input or function key can be programmed in PSL to select the setting group as shown in the table below. If 'Setting Group - select via menu' is selected then in the Configuration column the 'Active Settings - Group1/2/3/4' can be used to select the setting group.

The setting group can be changed via the hotkey menu providing ‘Setting Group select via menu’ is chosen.

Two DDB signals are available in PSL for selecting a setting group via an opto input or function key selection. The following table illustrates the setting group that is active on activation of the relevant DDB signals.

DDB 542 SG select x1	DDB 543 SG select 1x	Selected setting group
0	0	1
1	0	2
0	1	3
1	1	4

Note: Each setting group has its own PSL. Once a PSL has been designed it can be sent to any one of 4 setting groups within the relay. When downloading a PSL to the relay the user will be prompted to enter the desired setting group to which it will be sent. This is also the case when extracting a PSL from the relay.

3.6 Control inputs

The control inputs function as software switches that can be set or reset either locally or remotely. These inputs can be used to trigger any function that they are connected to as part of the PSL. There are three setting columns associated with the control inputs that are: **CONTROL INPUTS**, **CTRL. I/P CONFIG.** and **CTRL. I/P LABELS**. The function of these columns is described below:

Menu text	Default setting	Setting range	Step size
CONTROL INPUTS			
Ctrl I/P Status	00000000000000000000000000000000		
Control Input 1	No Operation	No Operation, Set, Reset	
Control Input 2 to 32	No Operation	No Operation, Set, Reset	

The Control Input commands can be found in the 'Control Input' menu. In the 'Ctrl. I/P status' menu cell there is a 32 bit word which represent the 32 control input commands. The status of the 32 control inputs can be read from this 32-bit word. The 32 control inputs can also be set and reset from this cell by setting a 1 to set or 0 to reset a particular control input. Alternatively, each of the 32 Control Inputs can be set and reset using the individual menu setting cells 'Control Input 1, 2, 3' etc. The Control Inputs are available through the relay menu as described above and also via the rear communications.

OP

In the programmable scheme logic editor 32 Control Input signals, DDB 191 - 223, which can be set to a logic 1 or On state, as described above, are available to perform control functions defined by the user.

Menu text	Default setting	Setting range	Step size
CTRL. I/P CONFIG.			
Hotkey Enabled	11111111111111111111111111111111		
Control Input 1	Latched	Latched, Pulsed	
Ctrl Command 1	Set/Reset	Set/Reset, In/Out, Enabled/Disabled, On/Off	
Control Input 2 to 32	Latched	Latched, Pulsed	
Ctrl Command 2 to 32	Set/Reset	Set/Reset, In/Out, Enabled/Disabled, On/Off	

Menu text	Default setting	Setting range	Step size
CTRL. I/P LABELS			
Control Input 1	Control Input 1	16 character text	
Control Input 2 to 32	Control Input 2 to 32	16 character text	

The **CTRL. I/P CONFIG.** column has several functions one of which allows the user to configure the control inputs as either 'latched' or 'pulsed'. A latched control input will remain in the set state until a reset command is given, either by the menu or the serial communications. A pulsed control input, however, will remain energized for 10 ms after the set command is given and will then reset automatically (i.e. no reset command required).

In addition to the latched/pulsed option this column also allows the control inputs to be individually assigned to the **Hotkey** menu by setting '1' in the appropriate bit in the **Hotkey Enabled** cell. The hotkey menu allows the control inputs to be set, reset or pulsed without the need to enter the **CONTROL INPUTS** column. The **Ctrl. Command** cell also allows the SET/RESET text, displayed in the hotkey menu, to be changed to something more suitable for the application of an individual control input, such as **ON/OFF**, **IN/OUT** etc.

The **CTRL. I/P LABELS** column makes it possible to change the text associated with each individual control input. This text will be displayed when a control input is accessed by the hotkey menu, or it can be displayed in the PSL.

Note: With the exception of pulsed operation, the status of the control inputs is stored in non volatile memory. In the event that the auxiliary supply is interrupted the status of all the inputs will be recorded. Following the restoration of the auxiliary supply the status of the control inputs, prior to supply failure, will be reinstated. If the battery is missing or flat the control inputs will set to logic 0 once the auxiliary supply is restored.

3.7 Real time clock synchronization via opto-inputs

In modern protective schemes it is often desirable to synchronize the relays real time clock so that events from different relays can be placed in chronological order. This can be done using the IRIG-B input, if fitted, or via the communication interface connected to the substation control system. In addition to these methods the MiCOM P54x range offers the facility to synchronize via an opto-input by routing it in PSL to DDB 400 (Time Sync.). Pulsing this input will result in the real time clock snapping to the nearest minute. The recommended pulse duration is 20 ms to be repeated no more than once per minute. An example of the time sync. function is shown.

Time of “Sync. Pulse”	Corrected time
19:47:00 to 19:47:29	19:47:00
19:47:30 to 19:47:59	19:48:00

Note: The above assumes a time format of hh:mm:ss.

To avoid the event buffer from being filled with unnecessary time sync. events, it is possible to ignore any event that is generated by the time sync. opto input. This can be done by applying the following settings:

Menu Text	Value
RECORD CONTROL	
Opto Input Event	Enabled
Protection Event	Enabled
DDB 63 - 32 (Opto Inputs)	Set “Time Sync.” associated opto to 0

To improve the recognition time of the time sync. opto input by approximately 10 ms, the opto input filtering could be disabled. This is achieved by setting the appropriate bit to 0 in the **Opto Filter Cntl.** cell (OPTO CONFIG. column). Disabling the filtering may make the opto input more susceptible to induced noise. Fortunately the effects of induced noise can be minimized by using the methods described in Firmware Design (*P54x/EN FD*) chapter.

3.8 Fault locator

The relay has an integral fault locator that uses information from the current and voltage inputs to provide a distance to fault location. The sampled data from the analog input circuits is written to a cyclic buffer until a fault condition is detected. The data in the input buffer is then held to allow the fault calculation to be made. When the fault calculation is complete the fault location information is available in the relay fault record.

When applied to parallel circuits mutual flux coupling can alter the impedance seen by the fault locator. The coupling will contain positive, negative and zero sequence components. In practice the positive and negative sequence coupling is insignificant. The effect on the fault locator of the zero sequence mutual coupling can be eliminated by using the mutual compensation feature provided.

3.8.1 Basic theory for ground faults

Figure 84 shows a two-machine equivalent circuit of a faulted power system.

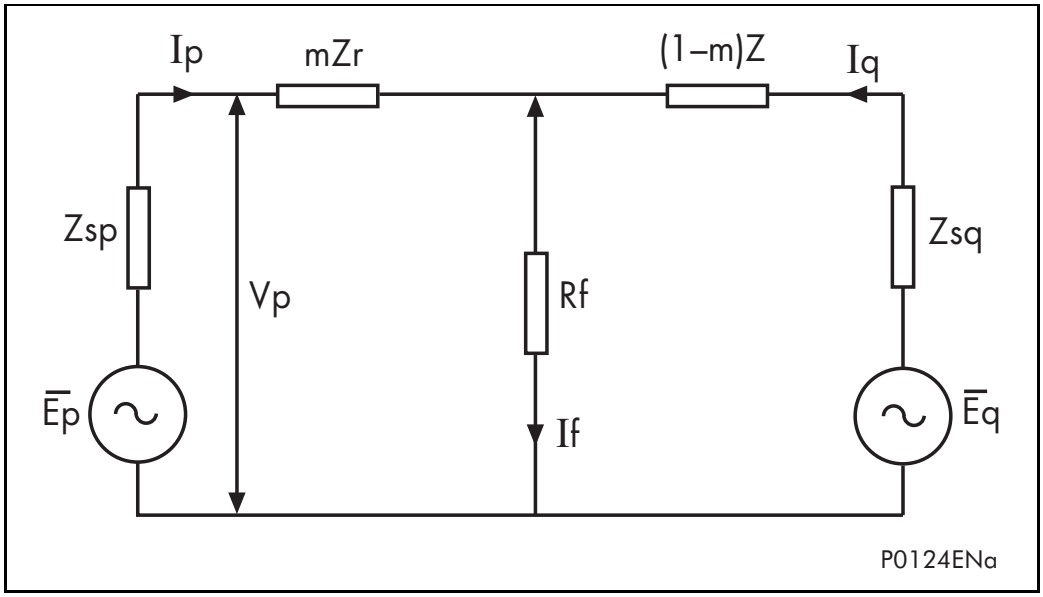

Figure 84 Two-machine equivalent circuit

From this diagram:

Vp = mIpZr + IfRf …(equation 1)

The fault location, m, can be found if If can be estimated allowing equation 1 to be solved.

3.8.2 Data acquisition and buffer processing

The fault locator stores the sampled data within a 12 cycle cyclic buffer at a resolution of 48 samples per cycle. When the fault recorder is triggered the data in the buffer is frozen such that the buffer contains 6 cycles of pre-trigger data and 6 cycles of post-trigger data. Fault calculation commences shortly after this trigger point.

The trigger for the fault recorder is user selectable via the programmable scheme logic.

The fault locator can store data for up to four faults. This ensures that fault location can be calculated for all shots on a typical multiple reclose sequence.

3.8.3 Faulted phase selection

Phase selection is derived from the current differential protection or the superimposed current phase selector.

Phase selection and fault location calculations can only be made if the current change exceeds 5% In.

3.8.4 The fault location calculation

The fault location calculation works by:

- First obtaining the vectors
- Selecting the faulted phase(s)
- Estimating the phase of the fault current If for the faulted phase(s)
- Solving equation 1 for the fault location m at the instant of time where f = 0

OP

3.8.5 Obtaining the vectors

Different sets of vectors are chosen depending on the type of fault identified by the phase selection algorithm. The calculation using equation 1 is applied for either a phase to ground fault or a phase to phase fault.

therefore for an A phase to ground fault:

IpZr=Ia(Zline/THETA line) + In (Zresidual/THETA residual) ...(equation 2)

and Vp=VA

and for a A phase to B phase fault:

IpZr=Ia(Zline/THETA line) - Ib (Zresidual / THETA residual) ...(equation 3)

and Vp = VA - VB

The calculation for a ground fault (equation 4) is modified when mutual compensation is used:

IpZr=Ia(Zline/THETA line) +In (residual/THETA residual)+

Im(mutual/THETA mutual) ...(equation 4)

OP

3.8.6 Solving the equation for the fault location

As the sine wave of If passes through zero, the instantaneous values of the sine waves Vp and Ip can be used to solve equation (1) for the fault location m. (The term IfRf being zero).

This is determined by shifting the calculated vectors of Vp and IpZr by the angle (90° - angle of fault current) and then dividing the real component of Vp by the real component of IpZr. (See Figure 85).

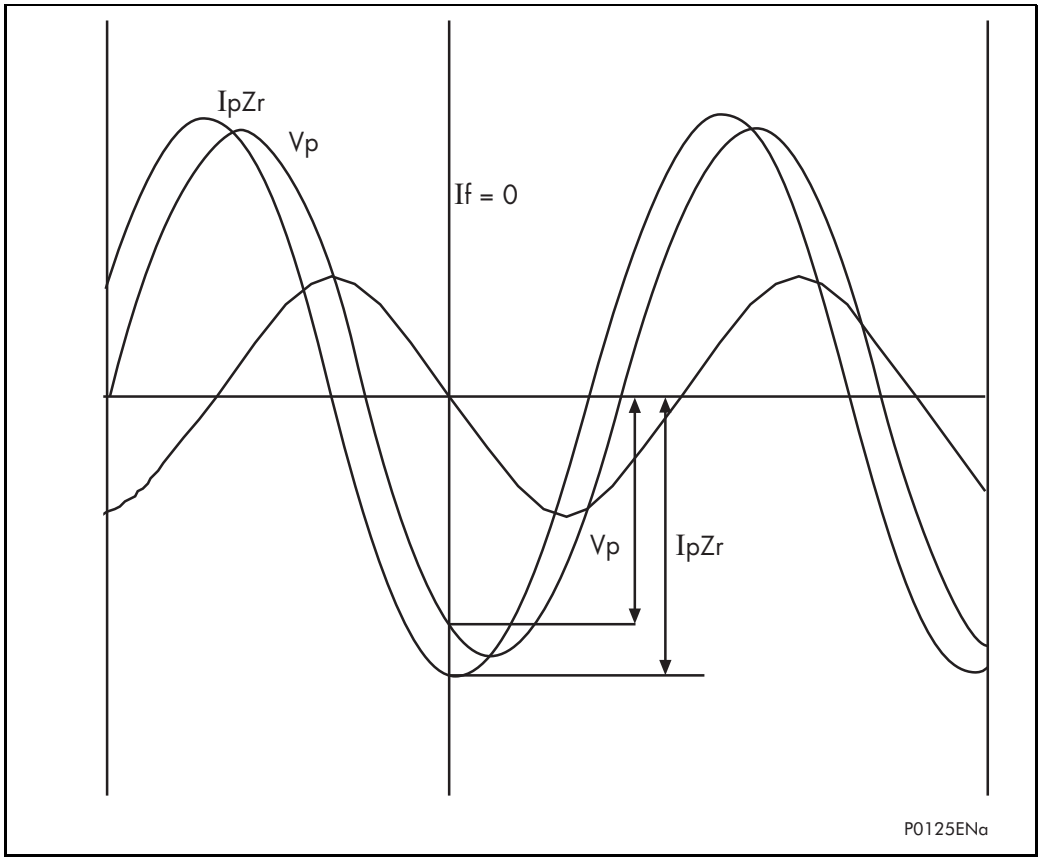

Figure 85 Fault locator selection of fault current zero

i.e.:

Phase advanced vector Vp

= | Vp | [cos(s) + jsin(s)] * [sin(d) + jcos(d)]

= | Vp | [-sin(s-d) + jcos(s-d)]

Phase advanced vector IpZr

= | IpZr | [cos (e) + jsin (e)] * [sin (d) + jcos (d)]

= | IpZr | [-sin(e-d) + jcos(e-d)]

Therefore, from equation 1:

m = Vp ÷ (Ip * Zr) at If = 0

= Vp sin(s-d) / (IpZr * sin(e-d))

Where:

d = Angle of fault current If

s = Angle of Vp

e = Angle of IpZr

Therefore the relay evaluates m which is the fault location as a percentage of the fault locator line impedance setting and then calculates the output fault location by multiplying this by the line length setting. When calculated the fault location can be found in the fault record under the VIEW RECORDS column in the Fault Location cells. Distance to fault is available in kilometers, miles, impedance or percentage of line length.

OP

3.8.7 Mutual compensation

Analysis of a ground fault on one circuit of a parallel over-head line shows that a fault locator positioned at one end of the faulty line will tend to over-reach while that at the other end will tend to under-reach. In cases of long lines with high mutual inductance, mutual zero sequence compensation can be used to improve the fault locator accuracy. The compensation is achieved by taking an input to the relay from the residual circuit of the current transformers in the parallel line.

The MiCOM P54x provides mutual compensation for both the fault locator function, AND the distance protection zones.

4. SINGLE CIRCUIT BREAKER CONTROL : P543/P545 OPERATIONAL DESCRIPTION

This section describes the P543/P545 operational control of a single circuit breaker.

The circuit breaker control and monitoring in the P543/P545 provides single phase or three phase switching of a feeder controlled by a single circuit breaker

4.1 Single and three phase auto-reclosing

4.1.1 Time delayed and high speed auto-reclosing

The MiCOM P543/P545 will initiate auto-reclosure following any current differential, Zone 1, or distance-aided scheme trips which occur. In addition, the user can selectively decide to auto-reclose for trips from time-delayed distance zones, overcurrent and earth (ground) elements, and DEF aided schemes.

The auto-reclose function offers multi-shot auto-reclose control, selectable to perform up to a four shot cycle. Dead times (Note 1) for all shots (Note 2) are independently adjustable. Should the CB close successfully at the end of the dead time, a **Reclaim Time** starts. If the circuit breaker does not trip again, the auto-reclose function resets at the end of the reclaim time. If the protection trips again during the reclaim time the relay advances to the next shot in the programmed cycle, or, if all programmed reclose attempts have been made, goes to lockout.

OP

Note 1: - **Dead Time** denotes the open (dead) interval delay of the CB.

Note 2: - A **Shot** is a reclosure attempt

Logic diagrams to explain the operation of the auto-reclose feature are grouped together at the end of this section.

4.1.2 Auto-reclose logic inputs (P543/P545)

The auto-reclose function uses inputs in the logic, which can be assigned and activated from any of the opto-isolated inputs on the relay via the programmable scheme logic (PSL). Contacts from external equipment may be used to influence the auto-recloser via the optos, noting that the CB Status (open/closed) must also be available via auxiliary contact inputs to the relay.

These logic inputs can also be assigned and activated from other sources. The function of these inputs is described below, identified by their DDB signal text. The inputs can be selected to accept either a normally open or a normally closed contact, programmable via the PSL editor.

4.1.2.1 CB healthy (P543/P545)

The majority of circuit breakers are only capable of providing one trip-close-trip cycle. Following this, it is necessary to re-establish sufficient energy in the circuit breaker before the CB can be reclosed. The CB Healthy input is used to ensure that there is sufficient energy available to close and trip the CB before initiating a CB close command. If on completion of the dead time, sufficient energy is not detected by the relay from the CB Healthy input for a period given by the CB Healthy time timer, lockout will result and the CB will remain open.

4.1.2.2 BAR (P543/P545)

The **BAR** input will block auto-reclose and cause a lockout if auto-reclose is in progress. It can be used when protection operation without auto-reclose is required.

4.1.2.3 Reset lockout (P543/P545)

The **Reset Lockout** input can be used to reset the auto-reclose function following lockout and reset any auto-reclose alarms, provided that the signals which initiated the lockout have been removed.

4.1.2.4 Pole discrepancy (P543/P545)

Circuit breakers with independent mechanisms for each pole normally incorporate a 'phases not together' or 'pole discrepancy' protection device which automatically trips all three phases if they are not all in the same position i.e. all open or all closed.

During single pole auto-reclosing a pole discrepancy condition is deliberately introduced and the pole discrepancy device must not operate for this condition. This may be achieved by using a delayed action pole discrepancy device with a delay longer than the single pole auto-reclose dead time, '1 Pole Dead Time'. Alternatively, a signal can be given from the relay during the single pole auto-reclose dead time, **AR 1 Pole In Progress**, to inhibit the pole discrepancy device.

The **Pole Discrepancy** input is activated by a signal from an external device indicating that all three poles of the CB are not in the same position. The **Pole Discrepancy** input forces a 3 pole trip which will cancel any single pole auto-reclose in progress and start three pole auto-reclose in progress.

4.1.2.5 Enable 1 pole AR (P543/P545)

The **En 1 Pole Reclose** input is used to select the single phase auto-reclose operating mode.

4.1.2.6 Enable 3 pole AR(P543/P545)

The **En 3 Pole Reclose** input is used to select the three phase auto-reclose operating mode.

OP

4.1.2.7 External trip (P543/P545)

The **External Trip 3Ph** input and the **External Trip A**, **External Trip B** and **External Trip C** inputs can be used to initiate three or single phase auto-reclose.

Note: These signals are not used to trip the CB but do initiate auto-reclose. To trip the CB directly they could be assigned to the trip contacts of the relay in the PSL.

4.1.3 Internal signals (P543/P545)

4.1.3.1 Trip initiate signals (P543/P545)

The **Trip Inputs A**, **Trip Inputs B** and **Trip Inputs C** signals are used to initiate signals or three phase auto-reclose.

Note: For single phase auto-reclose these signals must be mapped in the PSL as shown in the default.

4.1.3.2 Circuit breaker status (P543/P545)

The **CB Open 3 ph**, **CB Open A ph**, **CB Open B ph** and **CB Open C ph**, signals are used to indicate if a CB is open three or single phase. These are driven from the internal pole dead logic and the CB auxiliary inputs.

The **CB Closed 3 ph**, **CB Closed A ph**, **CB Closed B ph** and **CB Closed C ph**, signals are used to indicate if a CB is closed three or single phase. These are driven from the internal pole dead logic and the CB auxiliary inputs.

4.1.3.3 Check synch ok and system check ok (P543/P545)

Internal signals generated from the internal system check function and external system check equipment are used by the internal auto-reclose logic to permit auto-reclosure.

4.1.4 Auto-reclose logic outputs (P543/P545)

The following DDB signals can be masked to a relay contact in the PSL or assigned to a Monitor Bit in **Commissioning Tests**, to provide information about the status of the auto-reclose cycle. These are described below, identified by their DDB signal text.

4.1.4.1 AR 1 pole in progress (P543/P545)

The **AR 1 Pole in Progress** output indicates that single pole auto-reclose is in progress. The output is on from protection initiation to the end of the single pole dead time, **1 Pole Dead Time**.

4.1.4.2 AR 3 pole in progress (P543/P545)

The **AR 3 Pole in Progress** output indicates that three pole auto-reclose is in progress. The output is on from protection initiation to the end of the three pole dead time, 'Dead Time 1, 2, 3, 4'.

4.1.4.3 Successful close (P543/P545)

The **AR Successful Reclose** output indicates that an auto-reclose cycle has been successfully completed. A successful auto-reclose signal is given after the CB has tripped from the protection and reclosed whereupon the fault has been cleared and the reclaim time has expired resetting the auto-reclose cycle. The successful auto-reclose output is reset at the next CB trip or from one of the reset lockout methods; see section 4.1.7.5 'Reset from lockout'.

OP

4.1.4.4 AR status (P543/P545)

The **A/R In Status 1P** output indicates that the relay is in the single phase auto-reclose mode. The **A/R In Status 3P** output indicates that the relay is in the three phase auto-reclose mode.

4.1.4.5 Auto close (P543/P545)

The **Auto Close** output indicates that the auto-reclose logic has issued a close signal to the CB. This output feeds a signal to the control close pulse timer and remains on until the CB has closed. This signal may be useful during relay commissioning to check the operation of the auto-reclose cycle. This signal is combined with the manual close signal to produce the signal **Control Close** which should be mapped to an output contact.

4.1.5 Auto-reclose alarms (P543/P545)

The following DDB signals will produce a relay alarm. These are described below, identified by their DDB signal text.

4.1.5.1 AR No checksync (latched) (P543/P545)

The **AR No Checksync** alarm indicates that the system voltages were not in synchronism at the end of the **Check Sync Time**, leading to a lockout condition. This alarm can be reset using one of the reset lockout methods; see section 4.1.7.5 'Reset from lockout'.

4.1.5.2 AR CB unhealthy (latched) (P543/P545)

The **AR CB Unhealthy** alarm indicates that the **CB Healthy** input was not energized at the end of the **CB Healthy Time**, leading to a lockout condition. The **CB Healthy** input is used to indicate that there is sufficient energy in the CB operating mechanism to close and trip the CB at the end of the dead time. This alarm can be reset using one of the reset lockout methods; see section 4.1.7.5 'Reset from lockout'.

4.1.5.3 AR lockout (self reset) (P543/P545)

The **AR Lockout** alarm indicates that the relay is in a lockout state and that further reclose attempts will not be made; see section 4.1.7.4 'AR Lockout' for more details. This alarm can be reset using one of the reset lockout methods; see section 4.1.7.5 'Reset from lockout'.

4.1.6 Auto-reclose logic operating sequence (P543/P545)

An auto-reclose cycle can be internally initiated by operation of a protection element, provided the circuit breaker is closed until the instant of protection operation. The user can, via a setting, determine if the auto-reclose shall be initiated on the rising edge of the protection trip (Protection Op) or on the falling edge (Protection Reset).

If single pole auto-reclose [A/R Status 1P] only is enabled then if the first fault is a single phase fault the single pole dead time (1 Pole Dead Time) and single pole auto-reclose in progress [AR 1pole in prog] starts on the rising or falling edge (according to the setting) of the single phase trip. If the relay has been set to allow more than one single pole reclose [Single Pole Shot >1] then any subsequent single phase faults will be converted to 3 pole trips. The three pole dead times ("Dead Time 2, Dead Time 3, Dead Time 4") [Dead Time 2, 3, 4] and three pole auto-reclose in progress [AR 3pole in prog] will start on the rising or falling edge (according to the setting) of the three pole trip for the 2nd, 3rd and 4th trips [shots]. For a multi-phase fault the relay will lockout on the rising or falling edge (according to the setting) of the three phase trip.

If three pole auto-reclose [A/R Status 3P] only is enabled then for any fault the three pole dead time ("Dead Time 1, Dead Time 2, Dead Time 3, Dead Time 4") [Dead Time 1, 2, 3, 4] and three pole auto-reclose in progress [AR 3pole in prog] starts on the rising or falling edge (according to the setting) of the three phase trip. The logic forces a 3 pole trip [Force 3 pole AR] for any single phase fault if three pole auto-reclose [A/R Status 3P] only is enabled.

If single [A/R Status 1P] and three phase auto-reclose [A/R Status 3P] are enabled then if the first fault is a single phase fault the single pole dead time ("1 Pole Dead Time") [1 Pole Dead Time] and single pole auto-reclose in progress [AR 1pole in prog] starts on the rising or falling edge (according to the setting) of the single phase trip. If the first fault is a multi-phase fault the three pole dead time ("Dead Time 1") and three pole auto-reclose in progress [AR 3pole in prog] starts on the rising or falling edge (according to the setting) of the three phase trip. If the relay has been set to allow more than one reclose [Three Pole Shot >1] then any subsequent faults will be converted to 3 pole trips [Force 3 pole AR]. The three pole dead times ("Dead Time 2, Dead Time 3, Dead Time 4") [Dead Time 2, 3, 4] and three pole auto-reclose in progress [AR 3pole in prog] will start on the rising or falling edge (according to the setting) of the three pole trip for the 2nd, 3rd and 4th trips [shots]. If a single phase fault evolves to a multi-phase fault during the single pole dead time [1 Pole Dead Time] then single pole auto-reclose in progress [AR 1pole in prog] is stopped and the three pole dead time [Dead Time 1] and three pole auto-reclose in progress [AR 3pole in prog] is started.

At the end of the relevant dead time, the auto-reclose single phase or three phase in progress signal is reset and a CB close signal is given, provided system conditions are suitable. The system conditions to be met for closing are that the system voltages are in synchronism or dead line/live bus or live line/dead bus conditions exist, indicated by the internal check synchronizing element and that the circuit breaker closing spring, or other energy source, is fully charged indicated from the **CB Healthy** input. The CB close signal is cut-off when the circuit breaker closes. For single pole auto-reclose no voltage or synchronism check is required as synchronizing power is flowing in the two healthy phases. Check synchronizing for the first three phase cycle is controlled by a setting.

When the CB has closed the reclaim time ("Reclaim Time") starts. If the circuit breaker does not trip again, the auto-reclose function resets at the end of the reclaim time. If the protection operates during the reclaim time the relay either advances to the next shot in the programmed auto-reclose cycle, or, if all programmed reclose attempts have been made, goes to lockout.

Every time the relay trips the sequence counter is incremented by 1. The relay compares the **Single Pole Shots** and **Three Pole Shots** counter values to the sequence count. If the fault is single phase and the sequence count is greater than the **Single Pole Shots** setting then the relay will lockout. If the fault is multi-phase phase and the sequence count is greater than the **Three Pole Shots** setting then the relay will also lockout.

For example, if **Single Pole Shots** = 2 and **Three Pole Shots** = 1, after two phase-phase faults the relay will lockout because the sequence count = 2 which is greater than the **Three Pole Shots** target of 1 and the second fault was a multi-phase fault. If there was a permanent earth fault the relay would trip and reclose twice and on the third application of earth fault current it would lockout. This is because on the third application of fault current the sequence count would be greater than the **Single Pole Shots** target of 2 and the third fault was an earth fault. There is no lockout at the second trip because the second trip was single phase and the sequence count is not greater than the **Single Pole Shots** target of 2. If there was a single phase fault which evolved to a phase-phase-ground fault then the relay would trip and reclose and on the second multi-phase fault would lockout. This is because on the second application of fault current the sequence count is greater than the **Three Pole Shots** target of 1 and the second fault was a multi-phase fault.

The total number of auto-reclosures is shown in the CB Control menu under **Total Reclosures**. This value can be reset to zero with the **Reset Total A/R** command.

The selection of which protection is used to initiate auto-reclose can be made using the settings **Initiate AR, No Action or Block AR** for the protection functions listed in the auto-reclose menu. See section 4.1.7.2 'Auto-reclose Initiation' for more details.

OP

For multi-phase faults the auto-reclose logic can be set to allow auto-reclose block for 2 and 3 phase faults or to block auto-reclose for 3 phase faults only using the setting **Multi Phase AR - Allow AR/BAR 2 & 3 Phase/BAR 3 Phase** in the Auto-reclose settings.

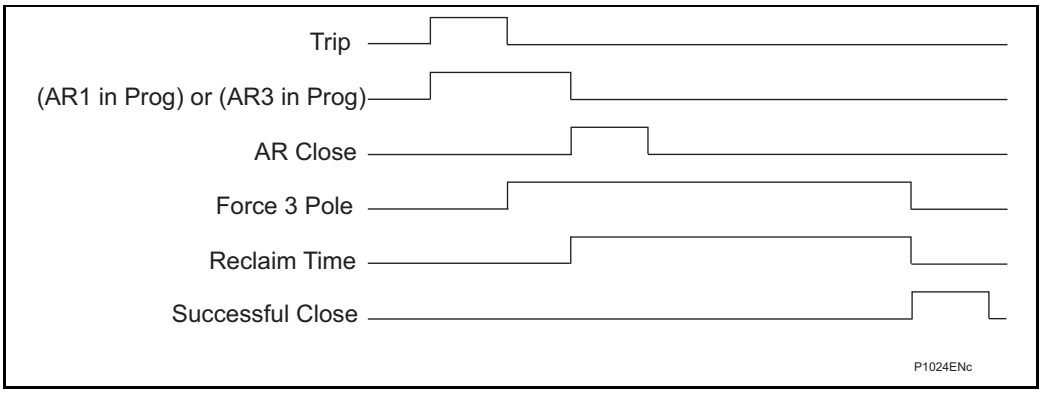

Figure 86 Auto-reclose timing diagram - single fault

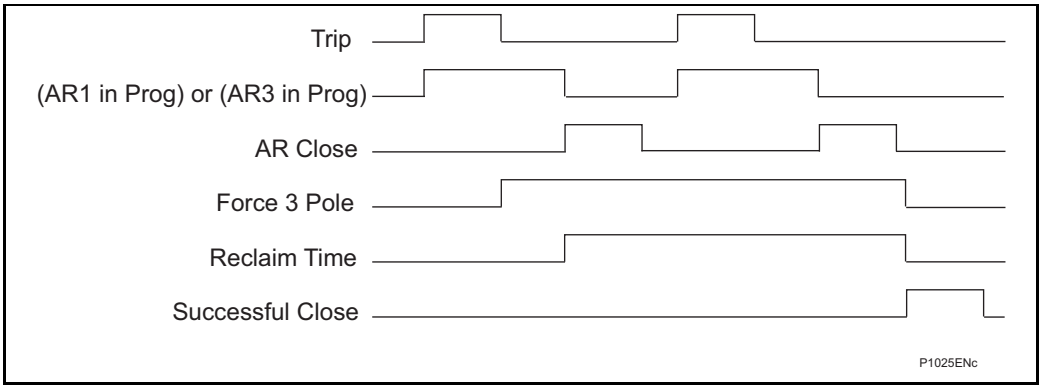

Figure 87 Auto-reclose timing diagram - repeated fault inception

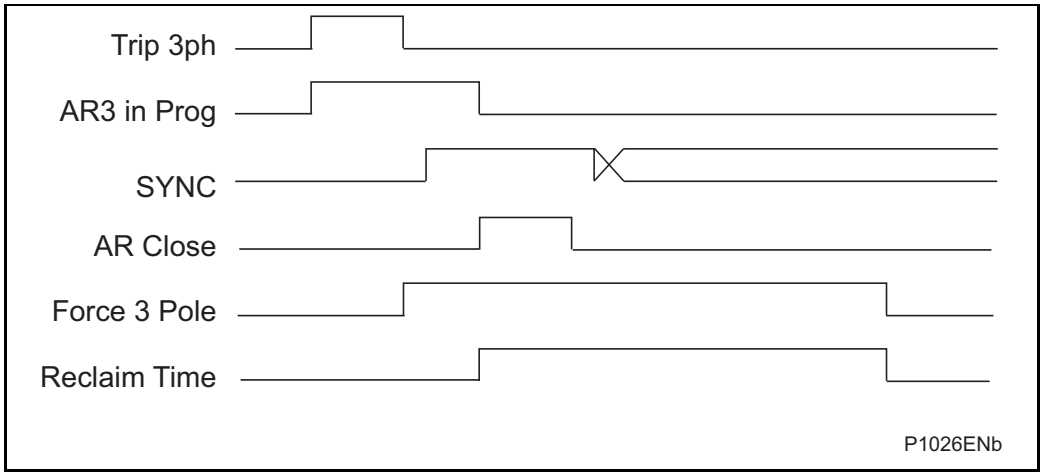

Figure 88 Auto-reclose timing diagram - fault with system synchronism

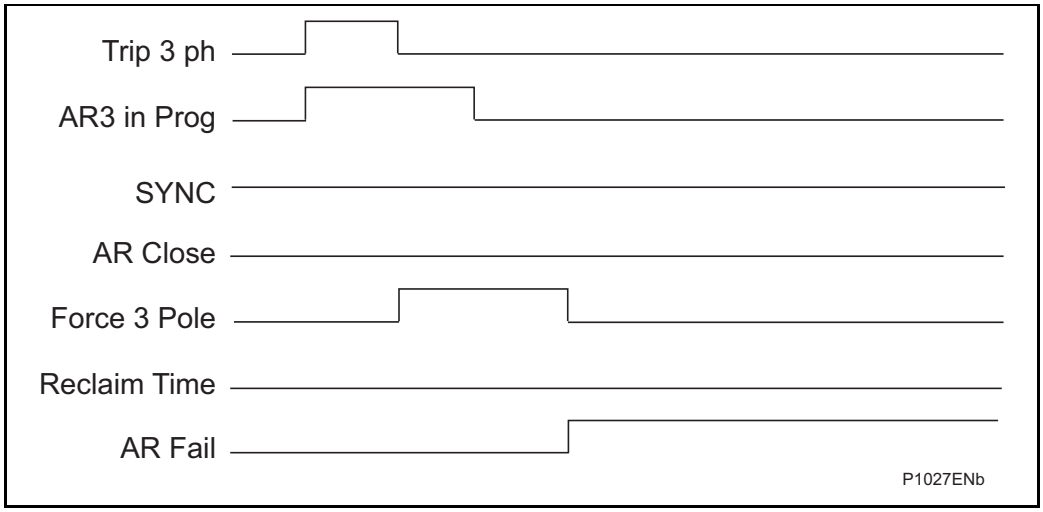

Figure 89 Auto-reclose timing diagram - lockout for no checksynch

OP

4.1.7 Main operating features (P543/P545)

4.1.7.1 Auto-reclose modes (P543/P545)

The auto-reclose function has three operating modes:

Single Pole Auto-reclose

Three Pole Auto-reclose

Single/Three Pole Auto-reclose

Single pole and three pole auto-reclose modes can be selected from opto inputs assigned for **En 1 Pole Reclose** and **En 3 Pole Reclose** respectively. Energizing both opto inputs would select the single/three pole operating mode. Alternatively, the settings **Single Pole A/R - Enabled/Disabled** and **Three Pole A/R - Enabled/Disabled** in the CB Control menu can also be used to select the operating modes. How these operating modes affect the operating sequence is described above.

4.1.7.2 Auto-reclose initiation (P543/P545)

Auto-reclose is initiated from the internal protection of the relay.

- By default, all "instantaneous" schemes will initiate auto-reclose, therefore current differential, Zone 1 distance, Aided Scheme 1, and Aided Scheme 2 will all initiate AR.
- For these instantaneous tripping elements, it is possible to override initiation for user set combinations of multi-phase faults if required, by use of the '*Multi Phase AR'* Block setting. This will prevent auto-reclose initiation, and drive the sequence to lockout.
- The directional aided schemes, the DEF schemes and TOR (distance option only) can be selected to **Initiate AR** or **Block AR** in the auto reclose settings. The overcurrent, earthfault, and other distance zones (where optionally specified) can be selected to **Initiate AR**, **Block AR** or cause **No Action** in the auto reclose settings.

4.1.7.3 Auto-reclose inhibit following manual close (P543/P545)

The AR Inhibit Time setting can be used to prevent auto-reclose being initiated when the CB is manually closed onto a fault. Auto-reclose is disabled for the AR Inhibit Time following manual CB closure.

4.1.7.4 AR lockout (P543/P545)

If protection operates during the reclaim time, following the final reclose attempt, the relay will be driven to lockout and the auto-reclose function will be disabled until the lockout condition is reset. This will produce an alarm, **AR Lockout**.

The block auto-reclose logic in the relay will also cause an auto-reclose lockout if auto-reclose is in progress. The **BAR** input assigned to an opto input will block auto-reclose and cause a lockout if auto-reclose is in progress. The auto-reclose logic can also be set to block auto-reclose for 2 and 3 phase faults or to block auto-reclose for 3 phase faults only using the setting **Multi Phase AR - Allow AR/BAR 2&3 Phase/BAR 3 Phase** in the Auto-reclose menu. Also, the protection functions can be individually selected to block auto-reclose using the settings, **Initiate AR, No Action or Block AR** in the Auto-reclose menu.

Auto-reclose lockout can also be caused by the CB failing to close because the CB springs are not charged/low gas pressure or there is no synchronism between the system voltages indicated by the **AR CB Unhealthy** and **AR No Checksync** alarms.

An auto-reclose lockout is also given if the CB is open at the end of the reclaim time.

Note: Lockout, can also be caused by the CB condition monitoring functions maintenance lockout, excessive fault frequency lockout, broken current lockout, CB failed to trip and CB failed to close and manual close - no check synchronism and CB unhealthy. These lockout alarms are mapped to a composite signal "CB Lockout Alarm".

4.1.7.5 Reset from lockout (P543/P545)

The **Reset Lockout** input assigned to an opto input can be used to reset the auto-reclose function following lockout and reset any auto-reclose alarms, provided that the signals which initiated the lockout have been removed. Lockout can also be reset from the clear key or the CB CONTROL command **Lockout Reset**.

The **Reset Lockout** by setting, **CB Close/ User interface** in CB CONTROL is used to enable/ disable reset of lockout automatically from a manual close after the manual close time **AR Inhibit Time**.

4.1.7.6 System check on shot 1 (P543/P545)

The **SysChk on Shot 1** setting is used to **Enable/Disable** system checks for the first reclose after a 3 pole trip in an auto-reclose cycle. When the **SysChk on Shot 1** is set to **Disabled** no system checks are required for the first reclose which may be preferred when high speed auto-reclose is applied to avoid the extra time for a system check. Subsequent reclose attempts in a multi-shot cycle will still require a system check.

4.1.7.7 Immediate auto-reclose with check synchronism (P543/P545)

The CS AR Immediate setting allows immediate auto-reclosure without waiting for the expiry of the settable dead time, provided the check synchronism conditions are met and a fault is not detected. The intention is to allow the local end to reclose immediately if the remote end has already reclosed successfully and the synchronizing conditions are met.

This feature applies when the setting is enabled. It applies to all dead times, just for three pole auto-reclose and just for Live Line-Live Bus condition (plus other check synchronizing conditions of phase angle, frequency etc).

When set to disabled the relay will wait for the relevant dead time.

4.1.7.8 Discrimination timer setting (P543/P545)

A single-phase fault can result in a single-phase trip and a single-pole auto-reclose cycle will be started, however the fault may evolve during the dead time to affect another phase. For an evolving fault, the protection issues a three-phase trip.

OP

The discrimination timer starts simultaneously with the dead time timer, and is used to discriminate from which point in time an evolving fault is identified as no longer one continued evolution of the first fault, but is now a discrete second fault condition. If the evolving fault occurs before the expiry of the discrimination time, the protection will start a three-pole auto-reclose cycle if permitted. If however, the second phase fault occurs after the discrimination time, the automatic reclose function is blocked, and driven to AR Lockout.

4.1.8 Auto-reclose logic diagrams (P543/P545)

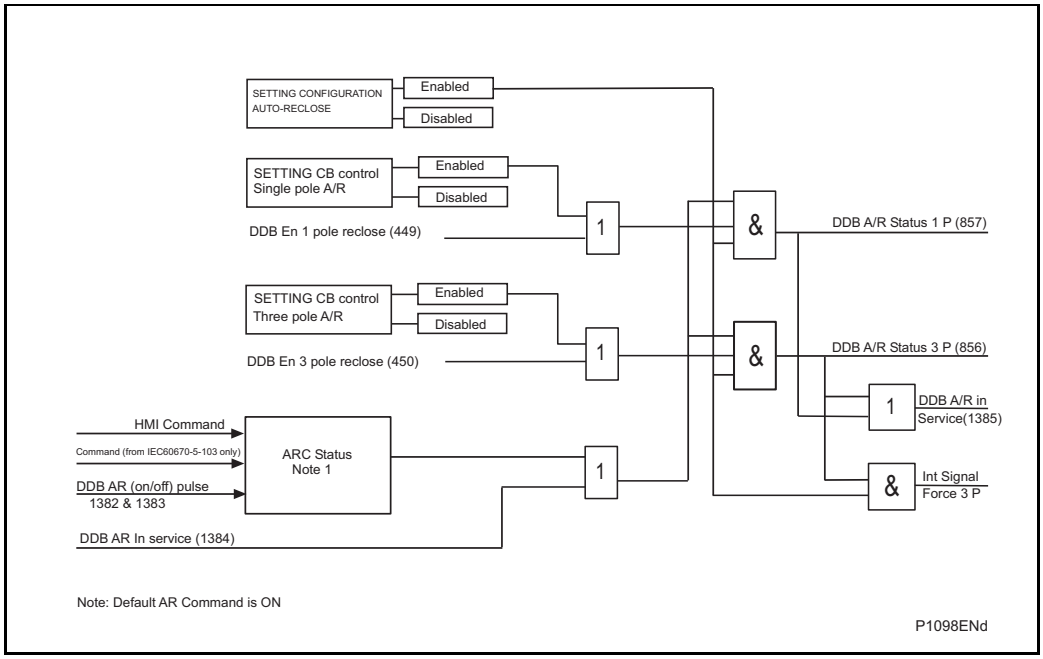

Figure 90 Auto-reclose enable logic

OP

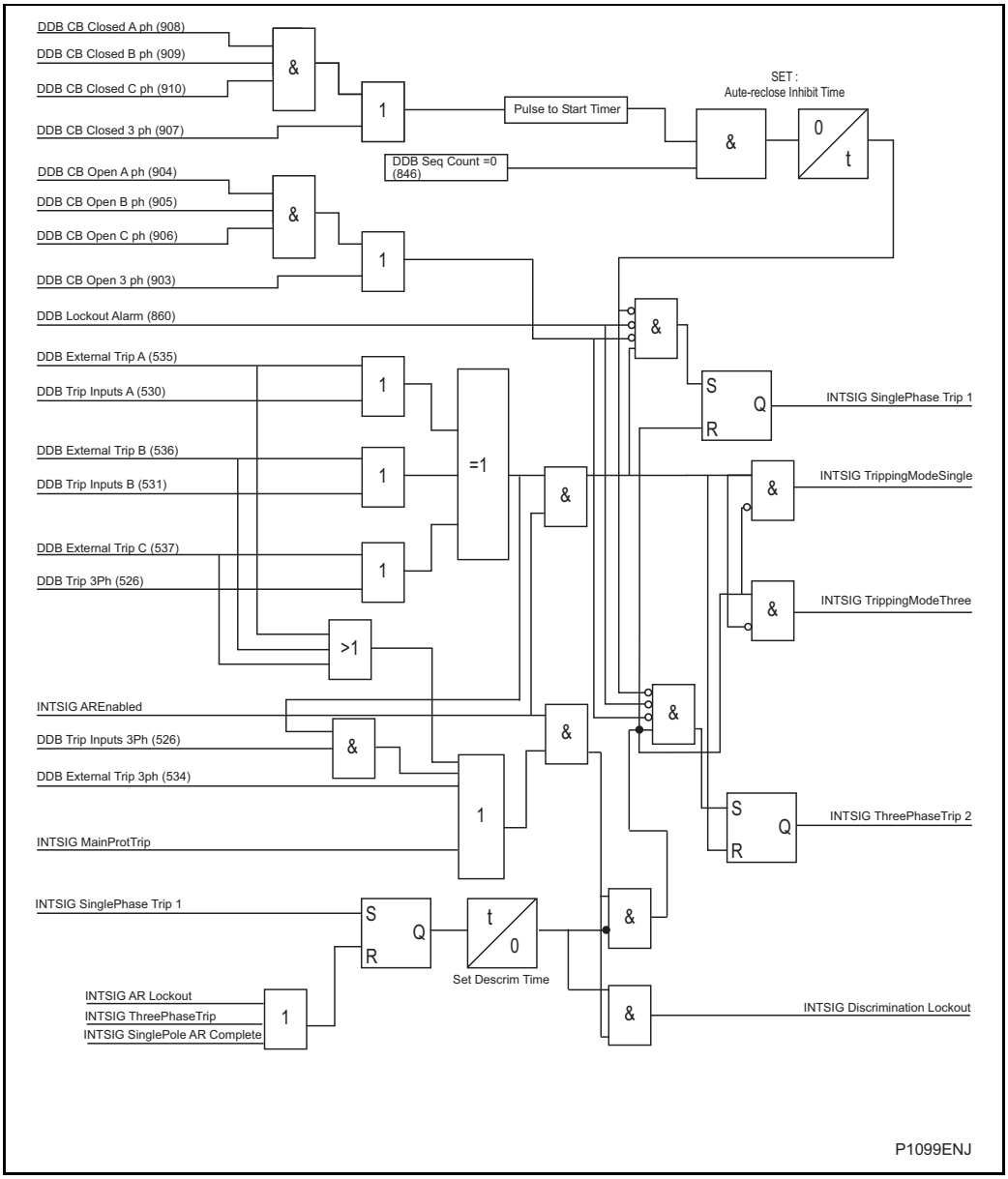

Figure 91 Auto-reclose single/three pole tripping

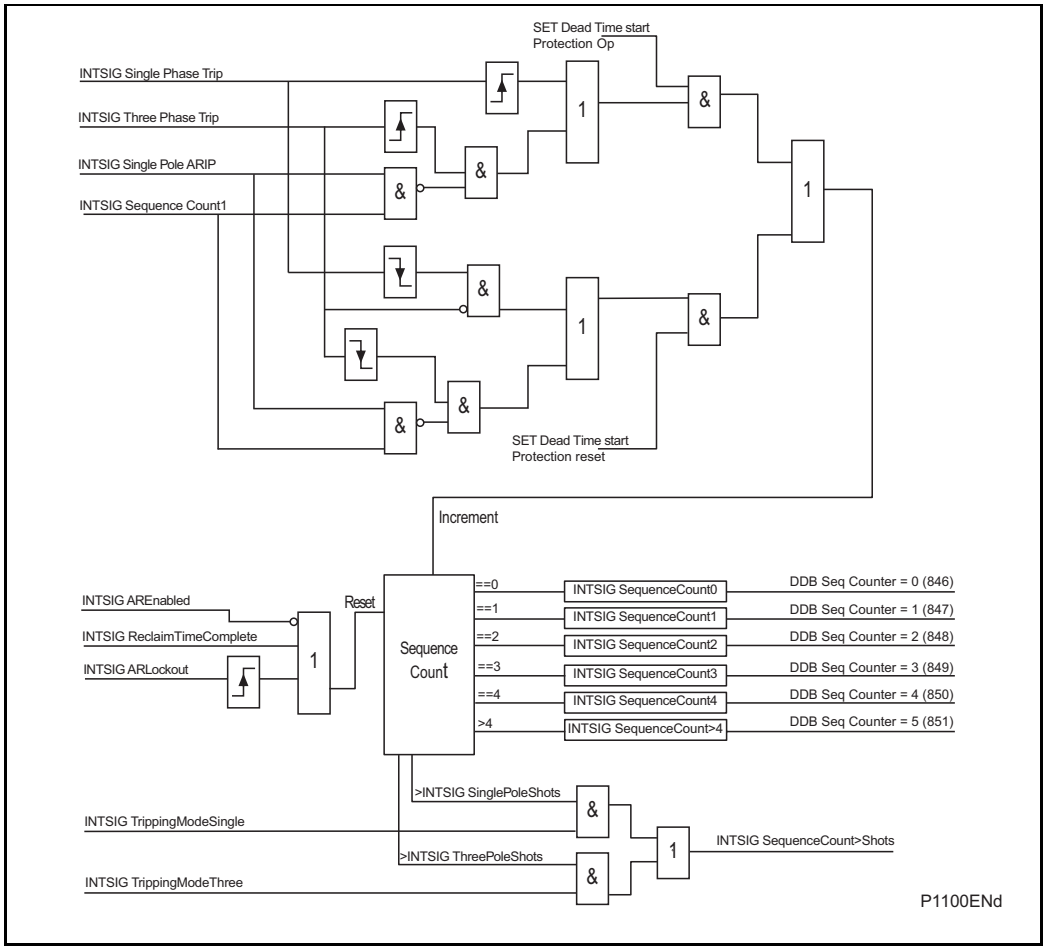

Figure 92 Auto-reclose inhibit sequence count (P543/P545)

OP

OP

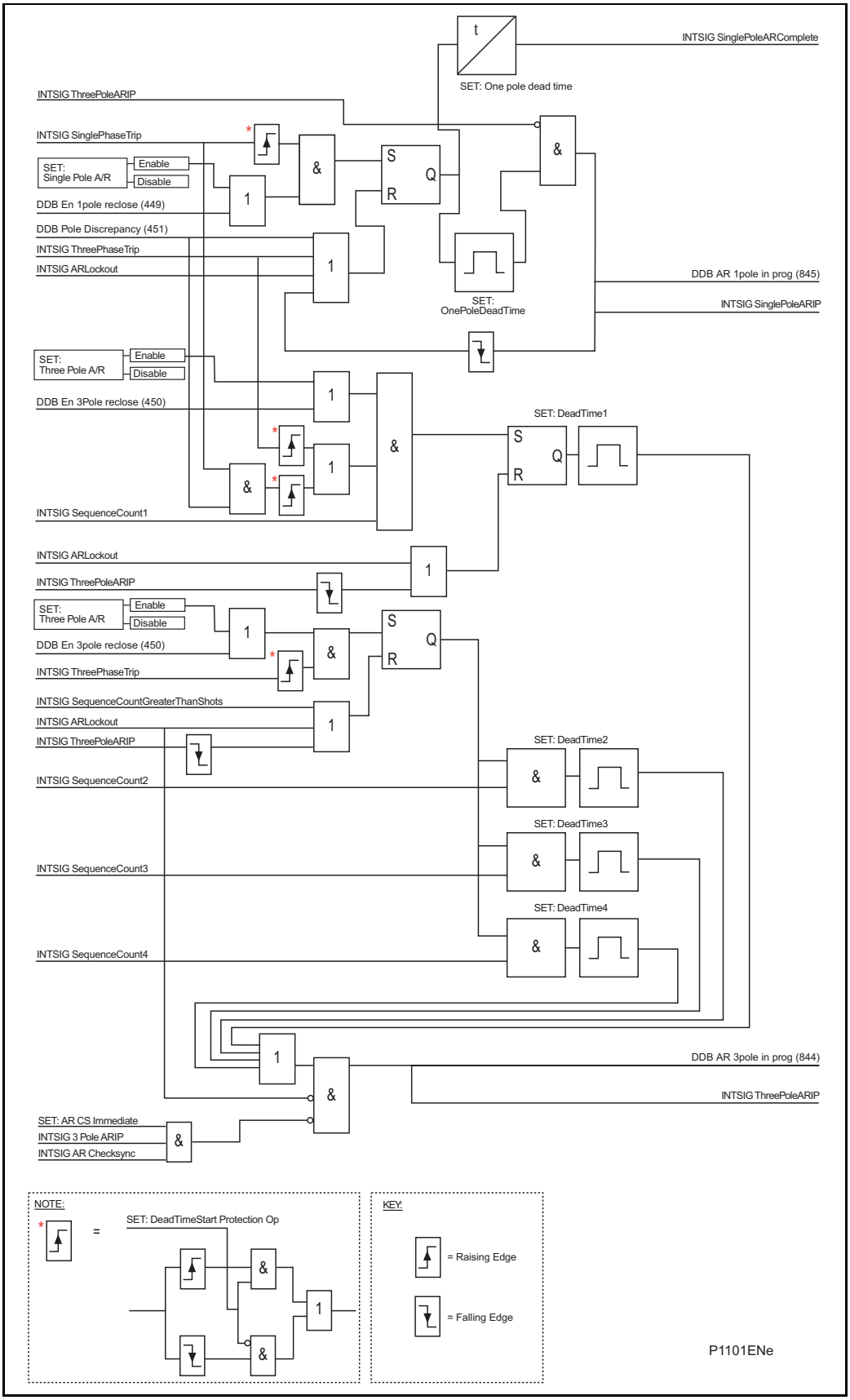

Figure 93 Auto-reclose cycles (P543/P545)

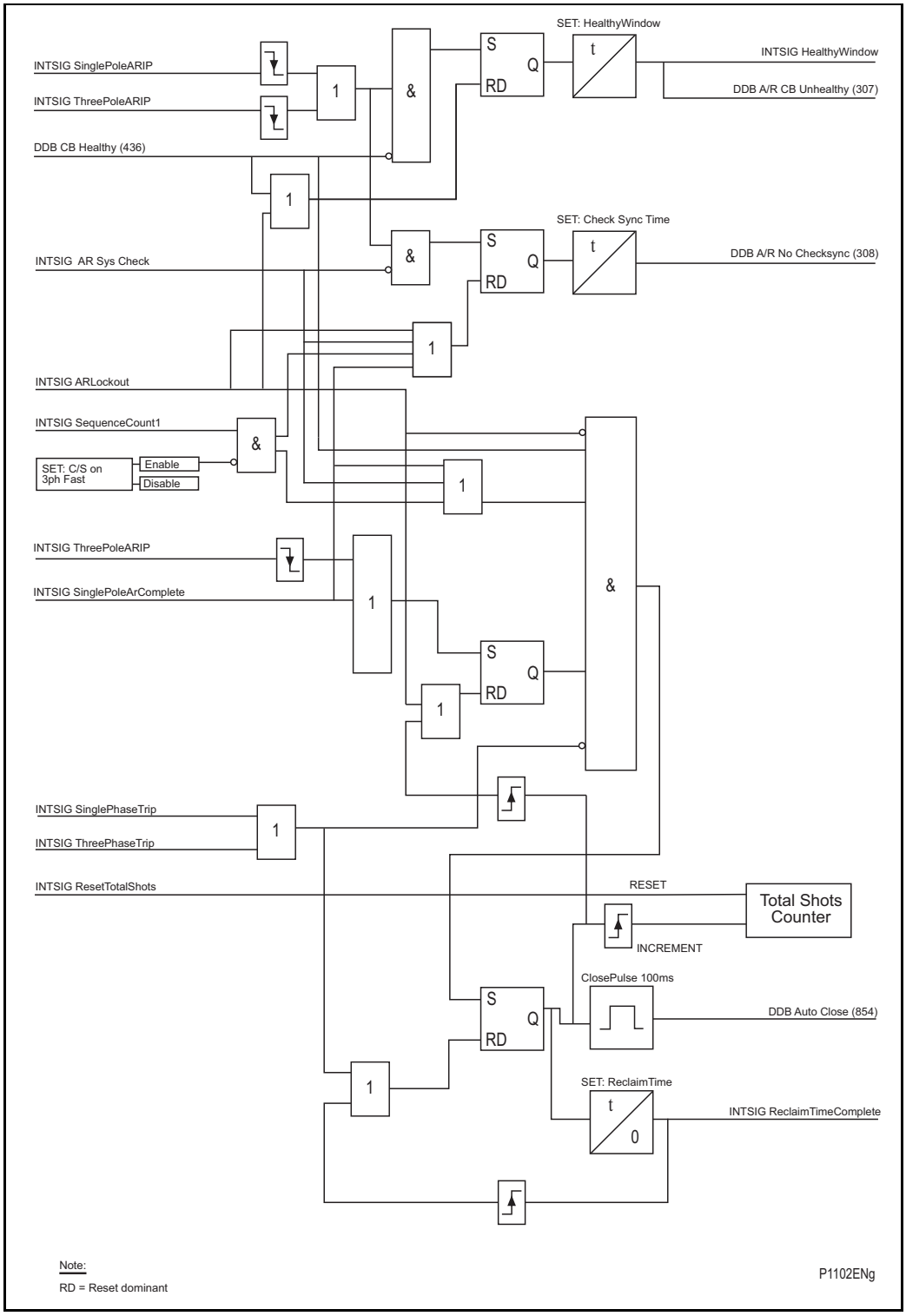

Figure 94 Auto-reclose close

OP

OP

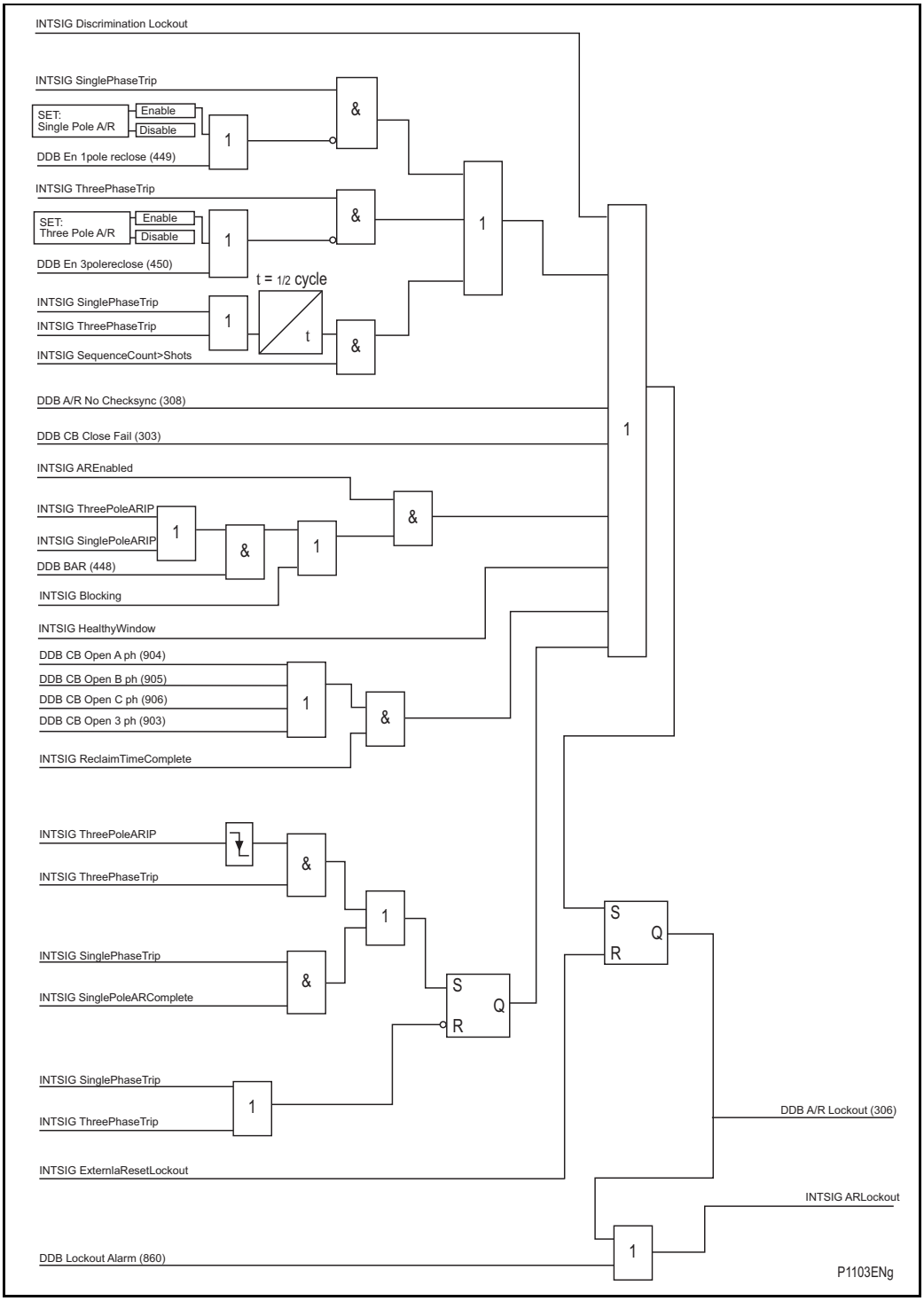

Figure 95 Auto-reclose lockout logic (P543/P545)

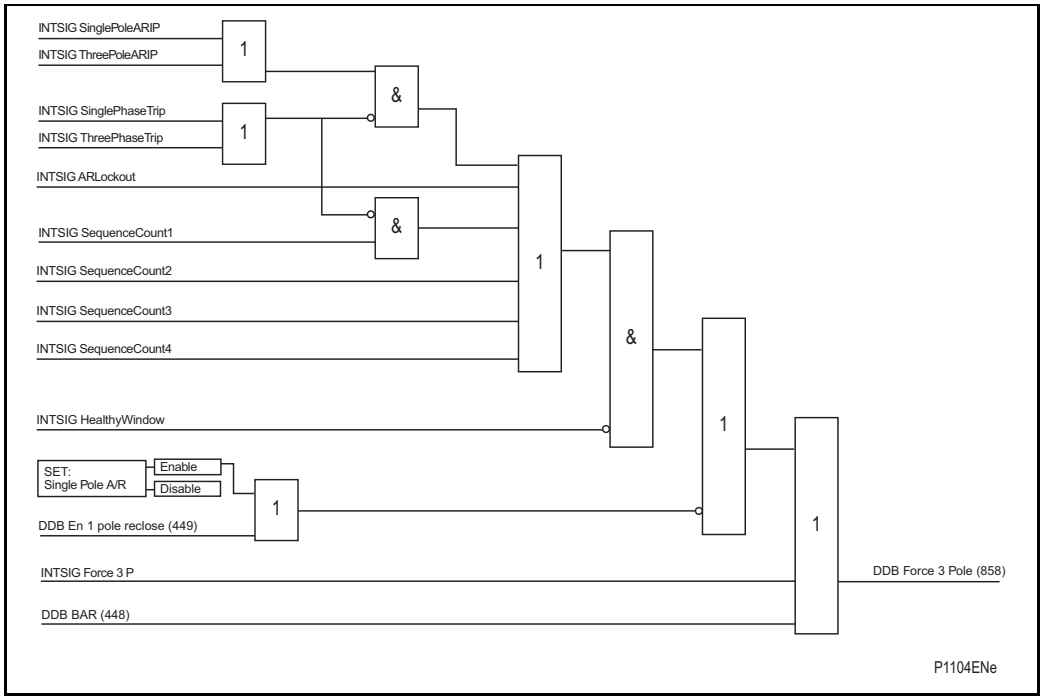

Figure 96 Auto-reclose force 3 pole trip (P543/P545)

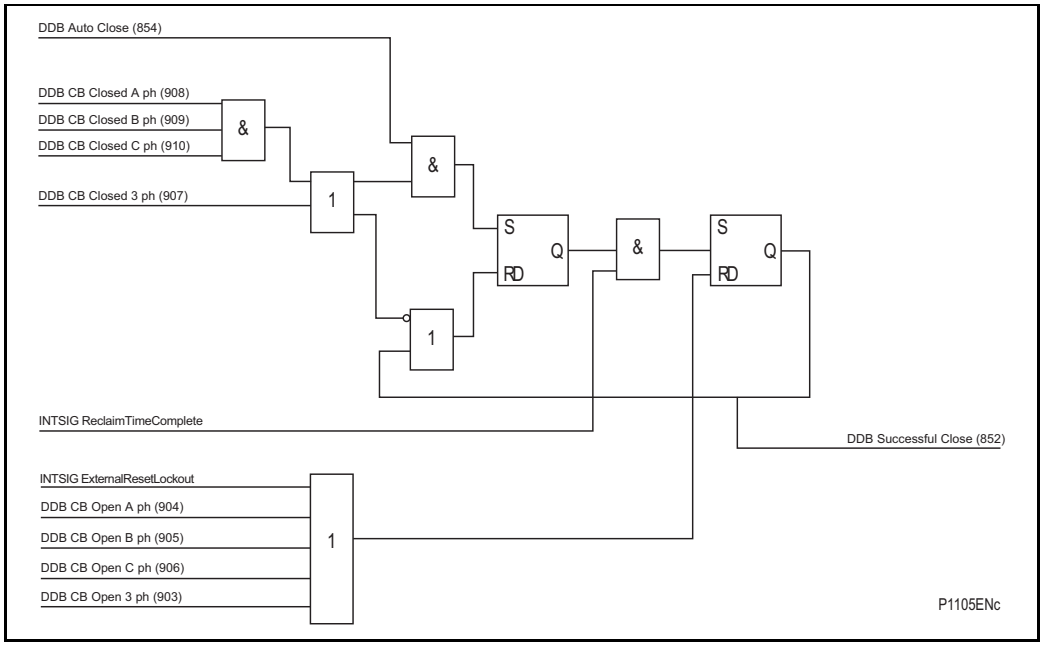

Figure 97 Auto-reclose close notify (P543/P545)

OP

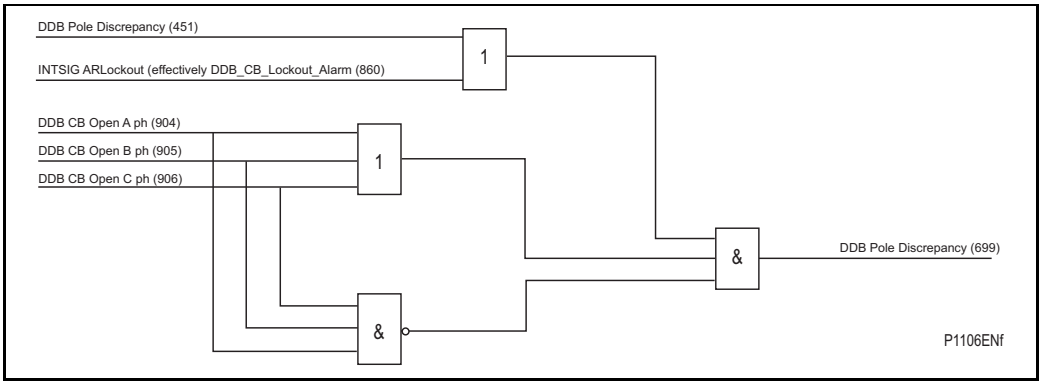

Figure 98 Ddb pole discrepancy trip (P543/P545)

4.2 System checks (including check synchronizer) (P543/P545)

4.2.1 Overview (P543/P545)

OP

In some situations it is possible for both “bus” and “line” sides of a circuit breaker to be live when the circuit breaker is open, for example at the ends of a feeder which has a power source at each end. Therefore, when closing the circuit breaker, it is normally necessary to check that the network conditions on both sides are suitable, before giving a CB Close command. This applies to both manual circuit breaker closing and auto-reclosure. If a circuit breaker is closed when the line and bus voltages are both live, with a large phase angle, frequency or magnitude difference between them, the system could be subjected to an unacceptable shock, resulting in loss of stability, and possible damage to connected machines.

System checks involve monitoring the voltages on both sides of a circuit breaker, and, if both sides are live, performing a synchronism check to determine whether the phase angle, frequency and voltage magnitude differences between the voltage vectors, are within permitted limits.

The pre-closing system conditions for a given circuit breaker depend on the system configuration and, for auto-reclosing, on the selected auto-reclose program. For example, on a feeder with delayed auto-reclosing, the circuit breakers at the two line ends are normally arranged to close at different times. The first line end to close usually has a live bus and a dead line immediately before reclosing, and charges the line (dead line charge) when the circuit breaker closes. The second line end circuit breaker sees live bus and live line after the first circuit breaker has reclosed. If there is a parallel connection between the ends of the tripped feeder, they are unlikely to go out of synchronism, i.e. the frequencies will be the same, but the increased impedance could cause the phase angle between the two voltages to increase. Therefore the second circuit breaker to close might need a synchronism check, to ensure that the phase angle has not increased to a level which would cause unacceptable shock to the system when the circuit breaker closes.

If there are no parallel interconnections between the ends of the tripped feeder, the two systems could lose synchronism, and the frequency at one end could “slip” relative to the other end. In this situation, the second line end would require a synchronism check comprising both phase angle and slip frequency checks.

If the second line end busbar has no power source other than the feeder which has tripped, the circuit breaker will see a live line and dead bus assuming the first circuit breaker has reclosed. When the second line end circuit breaker closes the bus will charge from the live line (dead bus charge).

4.2.2 VT selection (P543/P545)

The MiCOM P543/P545 has a three phase **Main VT** input and a single phase **Check Sync VT** input. Depending on the primary system arrangement, the main three phase VT for the relay may be located on either the busbar side or the line side of the circuit breaker, with the check sync VT being located on the other side. Hence, the relay has to be programmed with the location of the main VT. This is done using the **Main VT Location** setting in the CT & VT RATIOS menu.

The Check Sync VT may be connected to either a phase to phase or phase to neutral voltage, and for correct synchronism check operation, the relay has to be programmed with the required connection. The **C/S Input** setting in the CT & VT RATIOS menu should be set to A-N, B-N, C-N, A-B, B-C or C-A A-N/1.732, B-N/1.732 or C-N/1.732 as appropriate.

4.2.3 Basic functionality (P543/P545)

System check logic is collectively enabled or disabled as required, by setting **System Checks** in the CONFIGURATION menu. The associated settings are available in SYSTEM CHECKS, sub-menus VOLTAGE MONITORS, CHECK SYNC and SYSTEM SPLIT. If **System Checks** is selected to Disabled, the associated SYSTEM CHECKS menu becomes invisible, and a *Sys checks Inactive* DDB signal is set.

In most situations where synchronism check is required, the Check Sync 1 function alone will provide the necessary functionality, and the Check Sync 2 and System Split signals can be ignored.

OP

4.2.4 System check logic outputs (P543/P545)

When enabled, the MiCOM P543/P545 system check logic sets signals as listed below, according to the status of the monitored voltages.

Line Live – If the Line voltage magnitude is not less than VOLTAGE MONITORS - Live Voltage setting

Line Dead – If the Line voltage magnitude is less than VOLTAGE MONITORS - Dead Voltage setting

Bus Live – If the Bus voltage magnitude is not less than VOLTAGE MONITORS - Live Voltage setting

Bus Dead – If the Bus voltage magnitude is less than VOLTAGE MONITORS - Dead Voltage setting

Check Sync 1 OK – If Check Sync 1 Status is Enabled, the Line and Bus voltages are both live, and the parameters meet the CHECK SYNC - Check Sync 1 ---- settings

Check Sync 2 OK – If Check Sync 2 Status is Enabled, the Line and Bus voltages are both live, and the parameters meet the CHECK SYNC - Check Sync 2 ---- settings

System Split – If SS Status is Enabled, the Line and Bus voltages are both live, and the measured phase angle between the voltage vectors is greater than SYSTEM SPLIT - SS Phase Angle setting

All the above signals are available as DDB signals for mapping in Programmable Scheme Logic (PSL). In addition, the Checksync 1 & 2 signals are “hard coded” into the auto-reclose logic.

4.2.5 Check sync 2 and system split (P543/P545)

Check Sync 2 and System Split functions are included for situations where the maximum permitted slip frequency and phase angle for synchro check can change according to actual system conditions. A typical application is on a closely interconnected system, where synchronism is normally retained when a given feeder is tripped, but under some circumstances, with parallel interconnections out of service, the feeder ends can drift out of synchronism when the feeder is tripped. Depending on the system and machine characteristics, the conditions for safe circuit breaker closing could be, for example:

Condition 1: for synchronized systems, with zero or very small slip:

slip ≦50 mHz; phase angle <30°

Condition 2: for unsynchronized systems, with significant slip:

slip ≦250 mHz; phase angle <10° and decreasing

By enabling both Check Sync 1, set for condition 1, and Check Sync 2, set for condition 2, the relay can be configured to allow CB closure if either of the two conditions is detected.

For manual circuit breaker closing with synchro check, some utilities might prefer to arrange the logic to check initially for condition 1 only. However, if a System Split is detected before the condition 1 parameters are satisfied, the relay will switch to checking for condition 2 parameters instead, based upon the assumption that a significant degree of slip must be present when system split conditions are detected. This can be arranged by suitable PSL logic, using the system check DDB signals.

OP

4.2.6 Synchronism check (P543/P545)

Check Sync 1 and Check Sync 2 are two synchro check logic modules with similar functionality, but independent settings.

For either module to function:

The System Checks setting must be Enabled

AND

The individual Check Sync 1(2) Status setting must be Enabled

AND

The module must be individually “enabled”, by activation of DDB signal Check Sync 1(2) Enabled, mapped in PSL

When enabled, each logic module sets its output signal when:

Line volts and bus volts are both live (Line Live and Bus Live signals both set)

AND

Measured phase angle is < Check Sync 1(2) Phase Angle setting

AND

(For Check Sync 2 only), the phase angle magnitude is decreasing (Check Sync 1 can operate with increasing or decreasing phase angle provided other conditions are satisfied)

AND

If Check Sync 1(2) Slip Control is set to Frequency or Frequency + Timer, the measured slip frequency is < Check Sync 1(2) Slip Freq setting

AND

If Check Sync Voltage Blocking is set to OV, UV + OV, OV + DiffV or UV + OV + DiffV, both line volts and bus volts magnitudes are < Check Sync Overvoltage setting

AND

If Check Sync Voltage Blocking is set to UV, UV + OV, UV + DiffV or UV + OV + DiffV, both line volts and bus volts magnitudes are > Check Sync Undervoltage setting

AND

If Check Sync Voltage Blocking is set to DiffV, UV + DiffV, OV + DiffV or UV + OV + DiffV, the voltage magnitude difference between line volts and bus volts is < Check Sync Diff Voltage setting

AND

If Check Sync 1(2) Slip Control is set to Timer or Frequency + Timer, the above conditions have been true for a time > or = Check Sync 1(2) Slip Timer setting

Note: Live Line/Dead Bus and Dead Bus/Line functionality is provided as part of the default PSL (see Figure 100).

4.2.7 Slip control by timer (P543/P545)

If Slip Control by Timer or Frequency + Timer is selected, the combination of Phase Angle and Timer settings determines an effective maximum slip frequency, calculated as:

$$\frac{2 \times A}{T \times 360} \text{ Hz. for Check Sync 1}$$

or

$$\frac{A}{T \times 360} \text{ Hz. for Check Sync 2}$$

Where:

A = Phase Angle setting (°)

T = Slip Timer setting (seconds)

For example, with Check Sync 1 Phase Angle setting 30° and Timer setting 3.3 sec, the “slipping” vector has to remain within ±30° of the reference vector for at least 3.3 seconds. Therefore a synchro check output will not be given if the slip is greater than 2 x 30° in 3.3 seconds. Using the formula: 2 x 30 ÷ (3.3 x 360) = 0.0505 Hz (50.5 mHz).

For Check Sync 2, with Phase Angle setting 10° and Timer setting 0.1 sec, the slipping vector has to remain within 10° of the reference vector, with the angle decreasing, for 0.1 sec. When the angle passes through zero and starts to increase, the synchro check output is blocked. Therefore an output will not be given if slip is greater than 10° in 0.1 second. Using the formula: 10 ÷ (0.1 x 360) = 0.278 Hz (278 mHz).

Slip control by Timer is not practical for “large slip / small phase angle” applications, because the timer settings required are very small, sometimes < 0 s. For these situations, slip control by frequency is recommended.

If Slip Control by Frequency + Timer is selected, for an output to be given, the slip frequency must be less than BOTH the set Slip Freq value and the value determined by the Phase Angle and Timer settings.

4.2.8 System split (P543/P545)

For the System Split module to function:

The System Checks setting must be Enabled.

AND

The SS Status setting must be Enabled.

AND

The module must be individually **enabled**, by activation of DDB signal System Split Enabled, mapped in PSL.

When enabled, the System Split module sets its output signal when:

Line volts and bus volts are both live (Line Live and Bus Live signals both set).

AND

Measured phase angle is > SS Phase Angle setting.

AND

If SS Volt Blocking is set to Undervoltage, both line volts and bus volts magnitudes are > SS Undervoltage setting.

The System Split output remains set for as long as the above conditions are true, or for a minimum period equal to the SS Timer setting, whichever is longer.

The **Check Synch** and **System Synch** functionality is illustrated in Figure 99, and the logic block diagram is shown in Figure 100.

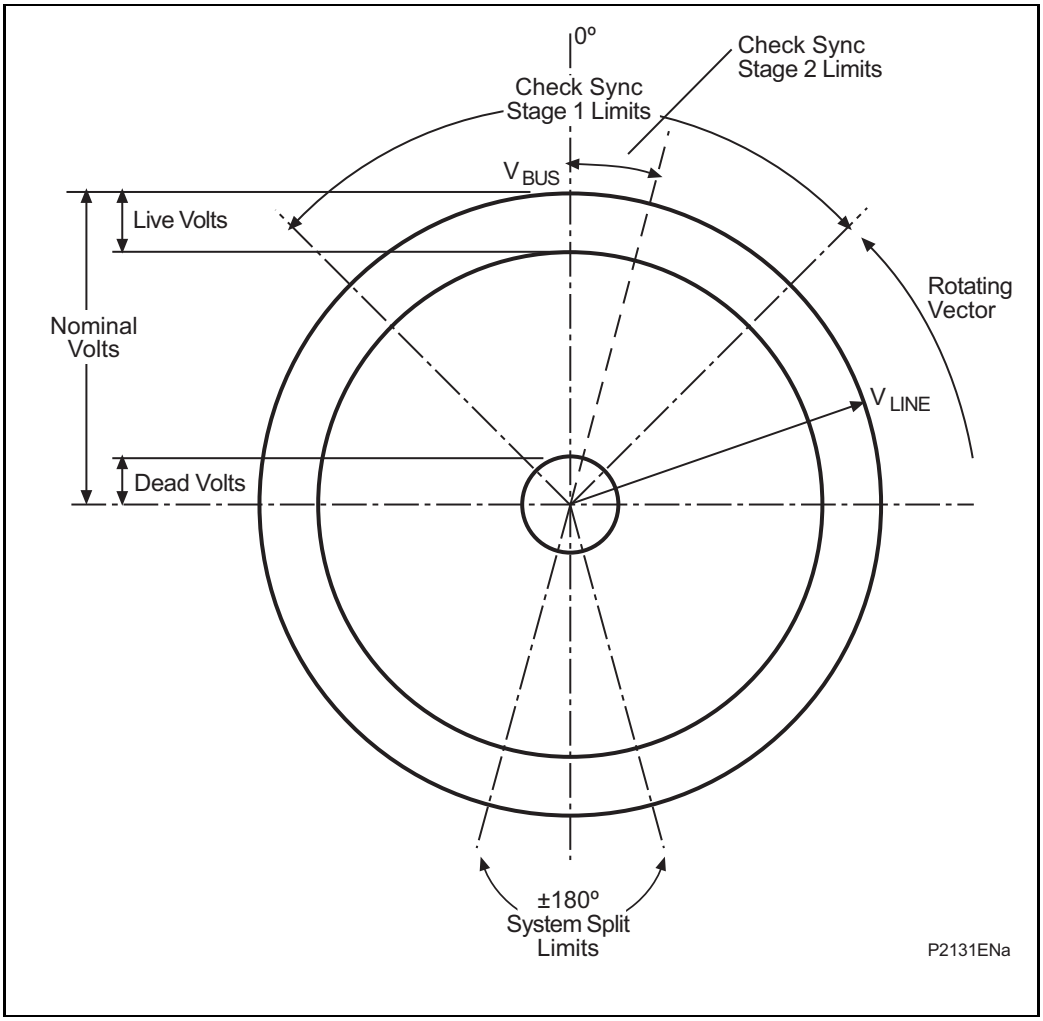

Figure 99 Synchro check and synchro split functionality (P543/P545)

OP

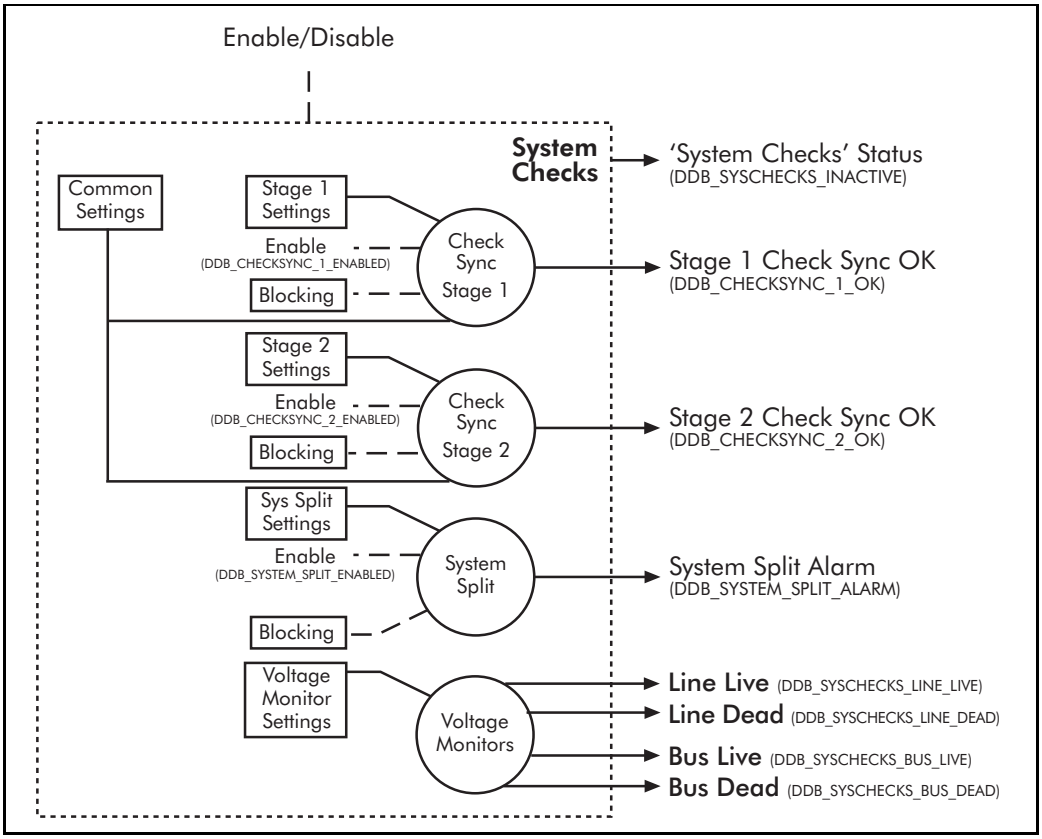

Figure 100 Check sync (P543/P545)

OP

4.3 Auto-reclose/check synchronization interface (P543/P545)

Output signals from the internal system check function and signals from an external system check device are combined and made available as two internal inputs to the auto-reclose function. One internal input permits auto-reclose based on system check conditions being met. The other internal input permits immediate auto-reclose based on check synchronism conditions being met, if this feature is enabled (CS AR Immediate).

Figure 101 shows the logic diagram for the interaction between the auto-reclose and system checks.

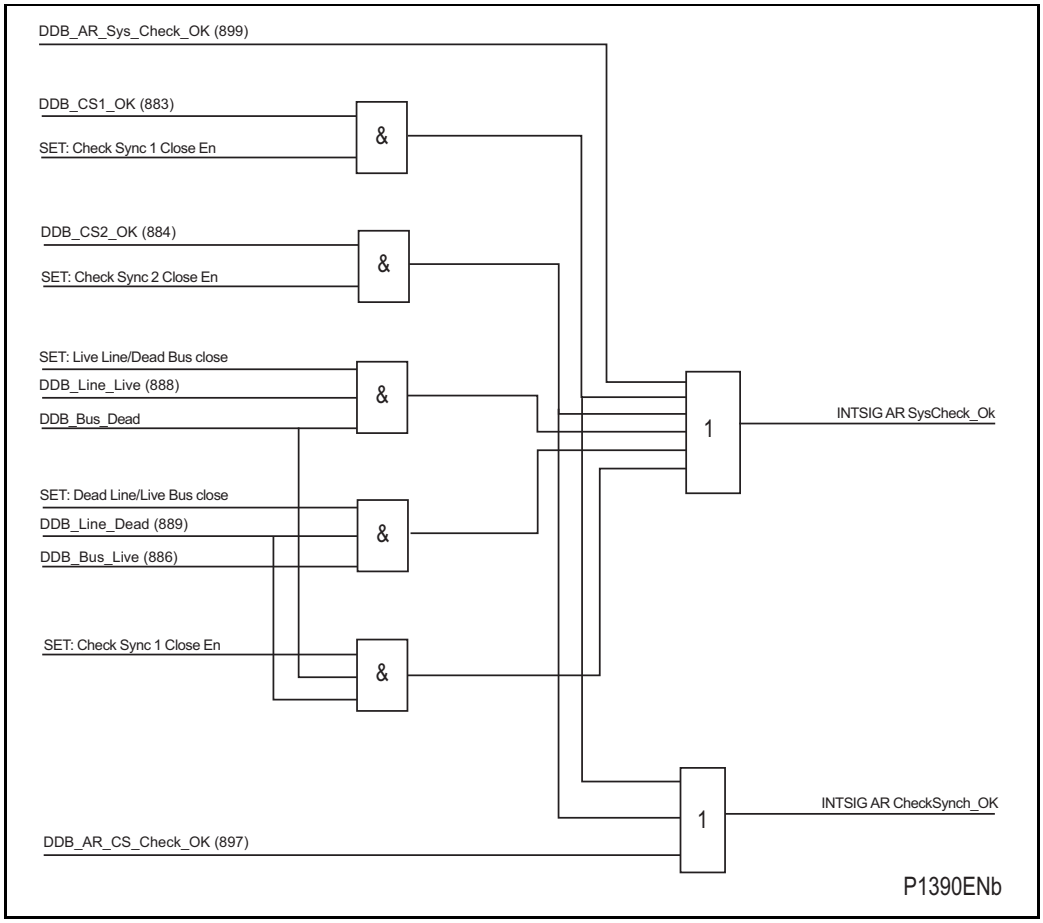

Figure 101 Auto-reclose/check sync interface (P543/P545)

If an external system check device is to be used with the internal auto-reclose function then logic inputs are available for the purpose and can be assigned to opto-isolated inputs using the PSL. These logic inputs are.

AR Check Synch OK

AR System Check OK/SYNC

4.4 Circuit breaker state monitoring (P543/P545)

The relay incorporates circuit breaker state monitoring, giving an indication of the position of the circuit breaker, or, if the state is unknown, an alarm is raised.

4.4.1 Circuit breaker state monitoring features (P543/P545)

MiCOM relays can be set to monitor normally open (52a) and normally closed (52b) auxiliary contacts of the circuit breaker. Under healthy conditions, these contacts will be in opposite states. Should both sets of contacts be open, this would indicate one of the following conditions:

- Auxiliary contacts/wiring defective
- Circuit Breaker (CB) is defective
- CB is in isolated position

Should both sets of contacts be closed, only one of the following two conditions would apply:

- Auxiliary contacts/wiring defective
- Circuit Breaker (CB) is defective

OP

If any of the above conditions exist, an alarm will be issued after a 5s time delay. A normally open / normally closed output contact can be assigned to this function via the programmable scheme logic (PSL). The time delay is set to avoid unwanted operation during normal switching duties.

In the CB CONTROL column of the relay menu there is a setting called 'CB Status Input'. This cell can be set at one of the following seven options:

None
52A 3 pole
52B 3 pole
52A & 52B 3 pole
52A 1 pole
52B 1 pole
52A & 52B 1 pole

Where 'None' is selected no CB status will be available. This will directly affect any function within the relay that requires this signal, for example CB control, auto-reclose, etc. Where only 52A is used on its own then the relay will assume a 52B signal from the absence of the 52A signal. Circuit breaker status information will be available in this case but no discrepancy alarm will be available. The above is also true where only a 52B is used. If both 52A and 52B are used then status information will be available and in addition a discrepancy alarm will be possible, according to the following table. 52A and 52B inputs are assigned to relay opto-isolated inputs via the PSL.

OP

Auxiliary contact position		CB state detected	Action
52A	52B		
Open	Closed	Breaker Open	Circuit breaker healthy
Closed	Open	Breaker Closed	Circuit breaker healthy
Closed	Closed	CB Failure	Alarm raised if the condition persists for greater than 5s
Open	Open	State Unknown	Alarm raised if the condition persists for greater than 5s

Where single pole tripping is used then an open breaker condition will only be given if all three phases indicate and open condition. Similarly for a closed breaker condition indication that all three phases are closed must be given. For single pole tripping applications 52A-a, 52A-b and 52A-c and/or 52B-a, 52B-b and 52B-c inputs should be used. The CB state monitoring logic is shown in AR Figure 1.

4.5 Circuit breaker condition monitoring (P543/P545)

Periodic maintenance of circuit breakers is necessary to ensure that the trip circuit and mechanism operate correctly, and also that the interrupting capability has not been compromised due to previous fault interruptions. Generally, such maintenance is based on a fixed time interval, or a fixed number of fault current interruptions. These methods of monitoring circuit breaker condition give a rough guide only and can lead to excessive maintenance.

If inputs relevant to the circuit breakers are available to the relay via the opto isolated inputs, the logic will be able to determine the state of each circuit breaker.

4.5.1 Circuit breaker condition monitoring features (P543/P545)

For each circuit breaker trip operation the relay records statistics as shown in the following table taken from the relay menu. The menu cells shown are counter values only. The Min./Max. values in this case show the range of the counter values. These cells can not be set.

Menu text	Default	Setting		Step size
		Min.	Max.	
CB Operations {3 pole tripping}	0	0	10000	1
Displays the total number of 3 pole trips issued by the relay.				
Total IA Broken	0	0	25000 In^	1
Displays the total fault current interrupted by the relay for the A phase.				
Total IB Broken	0	0	25000 In^	1
Displays the total fault current interrupted by the relay for the A phase.				
Total IC Broken	0	0	25000 In^	1 In^
Displays the total fault current interrupted by the relay for the A phase.				
CB Operate Time	0	0	0.5 s	0.001
Displays the calculated CB operating time.				
Reset CB Data	No		Yes, No	
Reset the CB condition counters.				

The above counters may be reset to zero, for example, following a maintenance inspection and overhaul. The circuit breaker condition monitoring counters will be updated every time the relay issues a trip command. In cases where the breaker is tripped by an external protection device it is also possible to update the CB condition monitoring. This is achieved by allocating one of the relays opto-isolated inputs (via the programmable scheme logic) to accept a trigger from an external device. The signal that is mapped to the opto is called 'External Trip'.

Note: When in Commissioning test mode the CB condition monitoring counters will not be updated.

The measurement of circuit breaker operating time, broken current and the overall CB Monitoring logic diagram, now follow as Figure 102, Figure 103, and Figure 104.

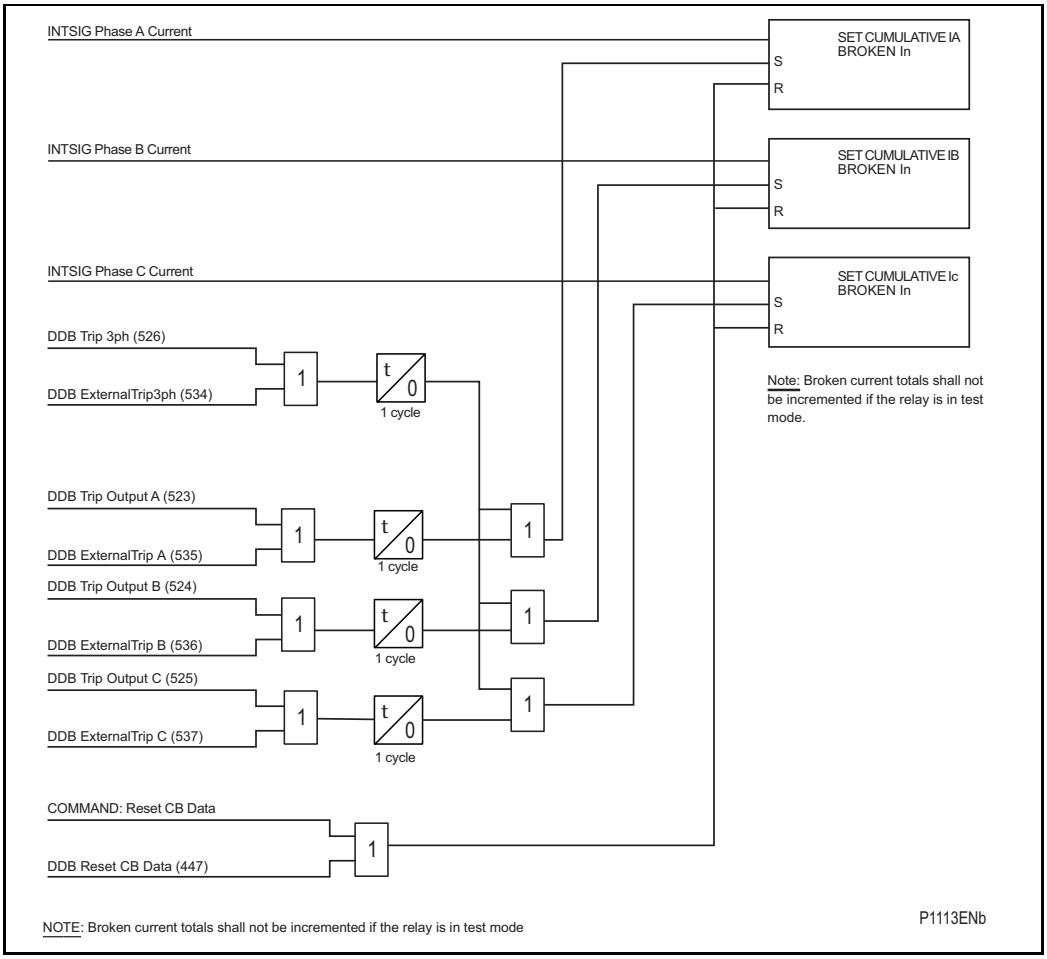

Figure 102 Circuit breaker condition monitoring - broken current (P543/P545)

OP

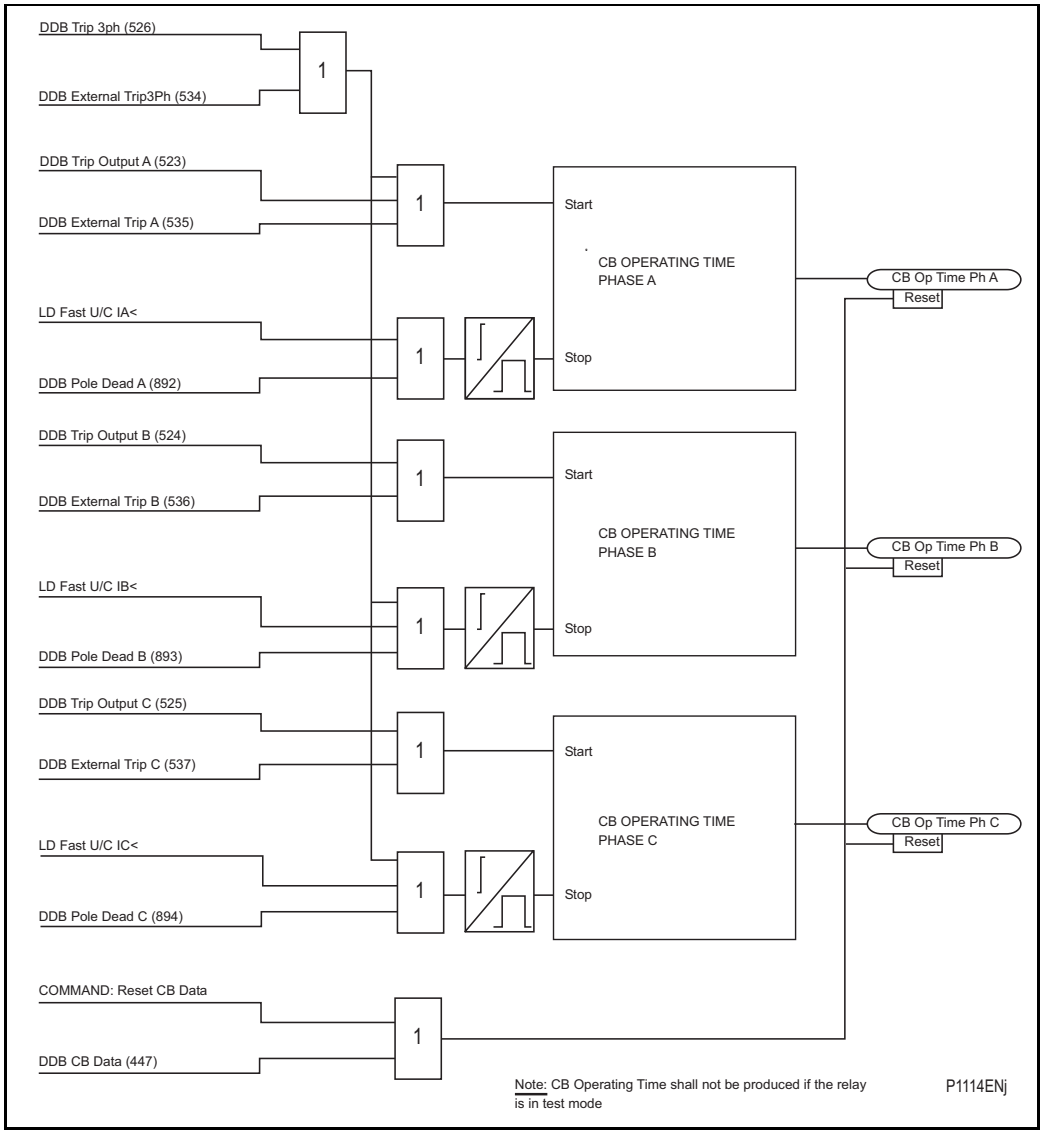

Figure 103 Circuit breaker condition monitoring - operation time (P543/P545)

OP

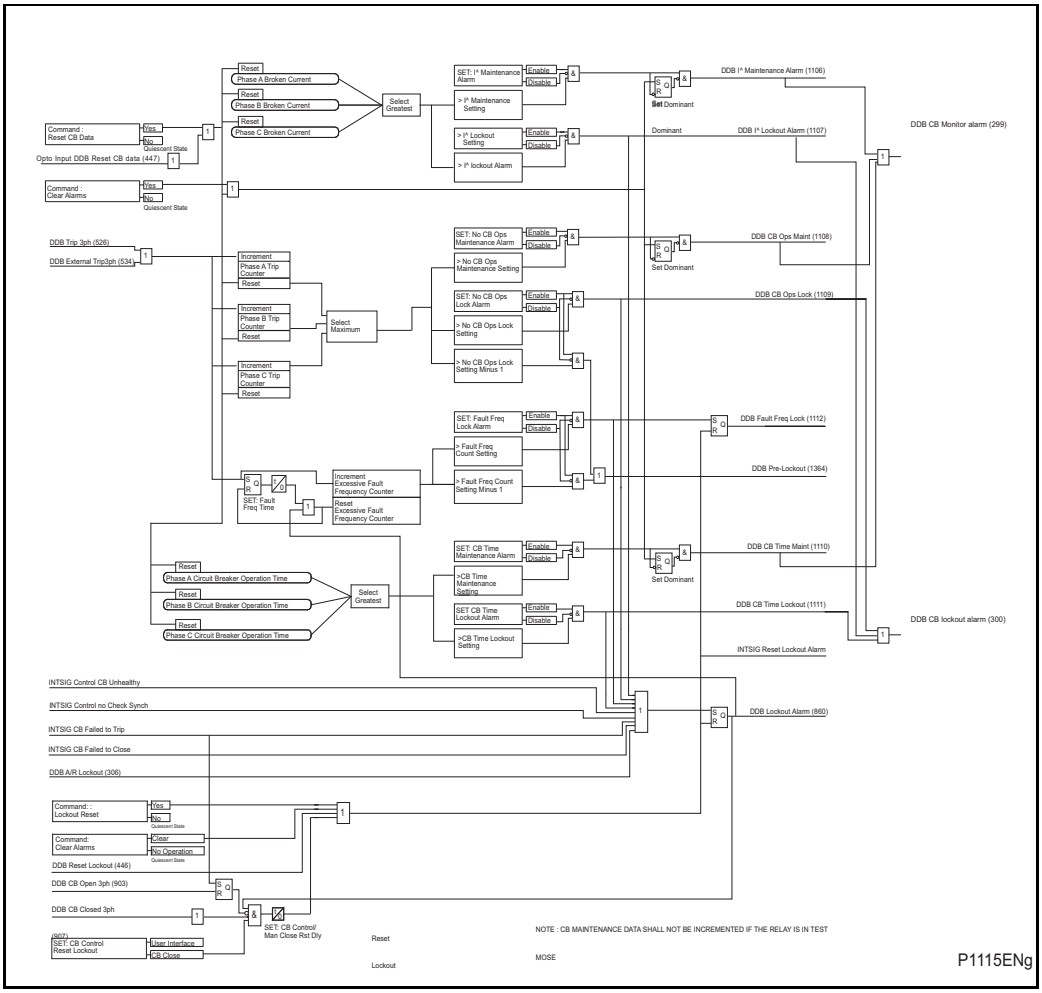

Figure 104 CB monitoring (P543/P545)

4.6 Circuit breaker control (P543/P545)

The relay includes the following options for control of a single circuit breaker:

- Local tripping and closing, via the relay menu or *Hotkeys*
- Local tripping and closing, via relay opto-isolated inputs
- Remote tripping and closing, using the relay communications

It is recommended that separate relay output contacts are allocated for remote circuit breaker control and protection tripping. This enables the control outputs to be selected via a local/remote selector switch as shown in Figure 105 Where this feature is not required the same output contact(s) can be used for both protection and remote tripping.

OP

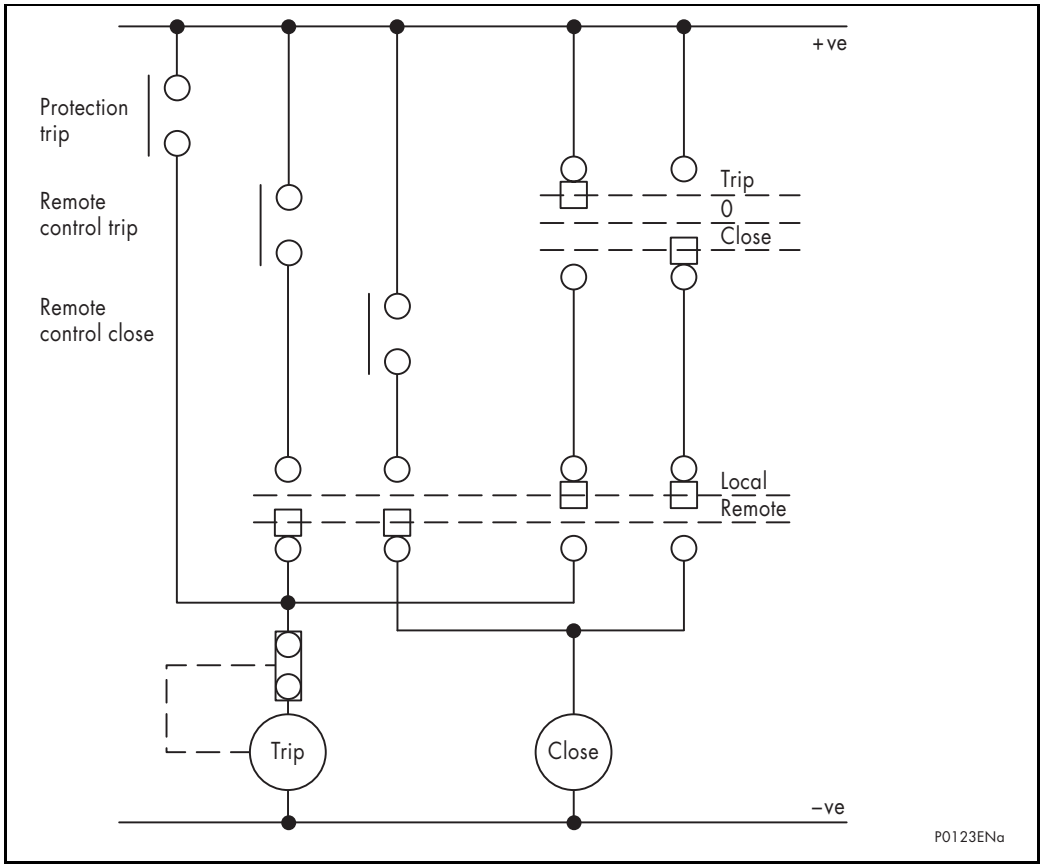

Figure 105 Remote control of circuit breaker (P543/P545)

A manual trip will be permitted provided that the circuit breaker is initially closed. Likewise, a close command can only be issued if the CB is initially open. To confirm these states it will be necessary to use the breaker 52A and/or 52B contacts (the different selection options are given from the 'CB Status Input' cell above). If no CB auxiliary contacts are available then this cell should be set to None. Under these circumstances no CB control (manual or auto) will be possible.

A circuit breaker close command **CB Close** will initiate closing of the circuit breaker. The output contact, however, can be set to operate following a user defined time delay ('Man Close Delay'). This is designed to give personnel time to retreat from the circuit breaker following the close command. This time delay applies to all manual circuit breaker close commands.

The control close cycle can be cancelled at any time before the output contact operates by any appropriate trip signal, or by activating DDB (443): **Reset Close Delay**.

An **Auto Close CB** signal from the **Auto close** logic bypasses the **Man Close Delay** time, and the **CB Close** output operate immediately to close the circuit breaker.

The length of the trip or close control pulse can be set via the 'Trip Pulse Time' and 'Close Pulse Time' settings respectively. These should be set long enough to ensure the breaker has completed its open or close cycle before the pulse has elapsed.

Note: The manual trip and close commands are found in the SYSTEM DATA column and the hotkey menu.

If an attempt to close the breaker is being made, and a protection trip signal is generated, the protection trip command overrides the close command.

OP

Where the check synchronism function is set, this can be enabled to supervise manual circuit breaker close commands. A circuit breaker close output will only be issued if the check synchronism criteria are satisfied. A user settable time delay is included ('C/S Window') for manual closure with check synchronizing. If the checksynch criteria are not satisfied in this time period following a close command the relay will lockout and alarm.

In addition to a synchronism check before manual reclosure there is also a CB Healthy check if required. This facility accepts an input to one of the relays opto-isolators to indicate that the breaker is capable of closing (circuit breaker energy for example). A user settable time delay is included ('Healthy Window') for manual closure with this check. If the CB does not indicate a healthy condition in this time period following a close command then the relay will lockout and alarm.

Where auto-reclose is used it may be desirable to block its operation when performing a manual close. In general, the majority of faults following a manual closure will be permanent faults and it will be undesirable to auto-reclose.

The 'AR Inhibit Time' setting can be used to prevent auto-reclose being initiated when the CB is manually closed onto a fault. Auto-reclose is disabled for the AR Inhibit Time following manual CB closure.

If the CB fails to respond to the control command (indicated by no change in the state of CB Status inputs) a 'CB Failed to Trip' or 'CB Failed to Close' alarm will be generated after the relevant trip or close pulses have expired. These alarms can be viewed on the relay LCD display, remotely via the relay communications, or can be assigned to operate output contacts for annunciation using the relays programmable scheme logic (PSL).

Note that the 'Healthy Window' timer and 'C/S Window' timer set under this menu section are applicable to manual circuit breaker operations only. These settings are duplicated in the Auto-reclose menu for Auto-reclose applications.

The 'Lockout Reset' and 'Reset Lockout by' setting cells in the menu are applicable to CB Lockouts **associated with manual circuit breaker closure, CB Condition monitoring (Number of circuit breaker operations,** for example) and auto-reclose lockouts.

The CB Control Logic is illustrated in Figure 106.

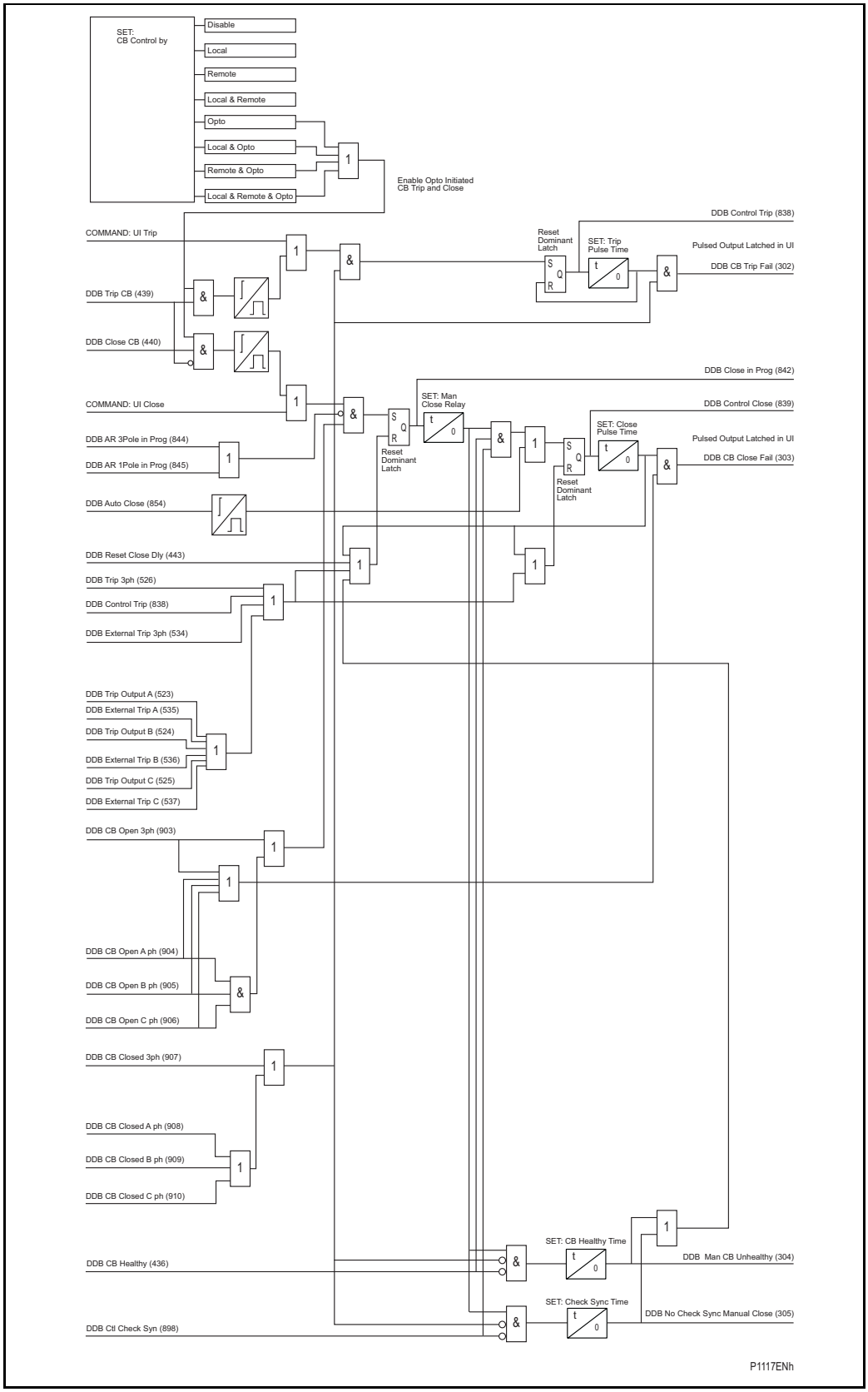

Figure 106 Circuit breaker control (P543/P545)

OP

OP

4.6.1 CB control using hotkeys (P543/P545)

The hotkeys allow direct access to manual trip and close commands without the need to enter the SYSTEM DATA column. Red or green color coding can be applied when used in CB control applications.

IF <<TRIP>> or <<CLOSE>> is selected the user is prompted to confirm the execution of the relevant command. If a trip is executed a screen with the CB status will be displayed once the command has been completed. If a close is executed a screen with a timing bar will appear while the command is being executed. This screen has the option to cancel or restart the close procedure. The timer used is taken from the manual close delay timer setting in the CB Control menu. When the command has been executed, a screen confirming the present status of the circuit breaker is displayed. The user is then prompted to select the next appropriate command or exit - this will return to the default relay screen.

If no keys are pressed for a period of 25 seconds while waiting for the command confirmation, the relay will revert to showing the CB Status. If no key presses are made for a period of 25 seconds while displaying the CB status screen, the relay will revert to the default relay screen. Figure 107 shows the hotkey menu associated with CB control functionality.

To avoid accidental operation of the trip and close functionality, the hotkey CB control commands will be disabled for 10 seconds after exiting the hotkey menu.

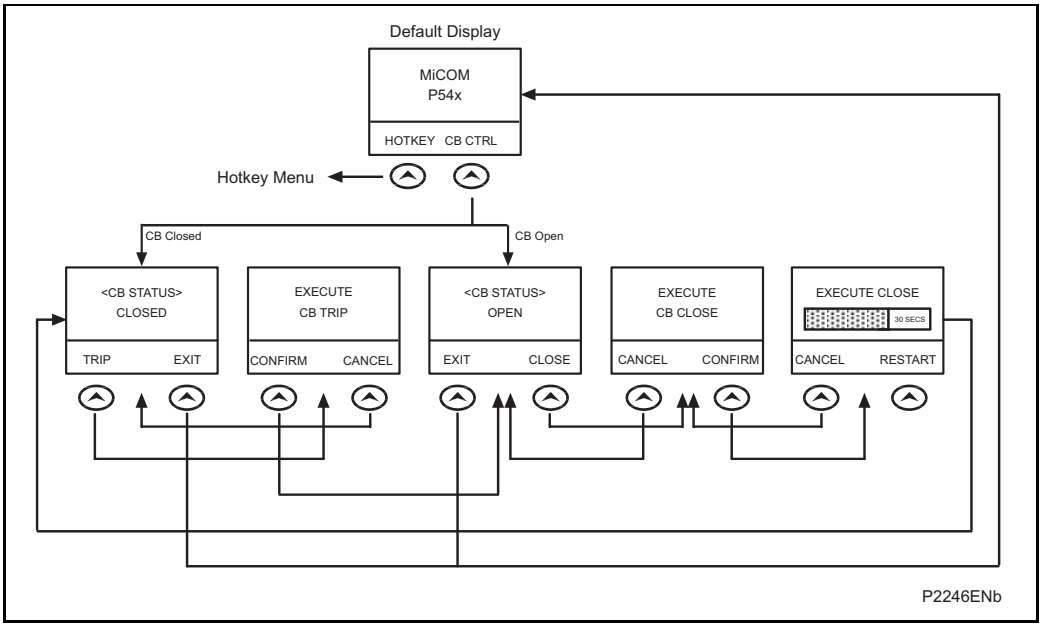

Figure 107 CB control hotkey menu

4.6.2 CB control using function keys (P543/P545)

The function keys allow direct control of the circuit breaker if programmed to do this in PSL. local tripping and closing, via relay opto-isolated inputs must be set in the **CB Control** menu 'CB control by' cell to enable this functionality. All CB manual control settings and conditions will apply for manual tripping and closing via function keys.

The following default logic can be programmed to activate this feature:

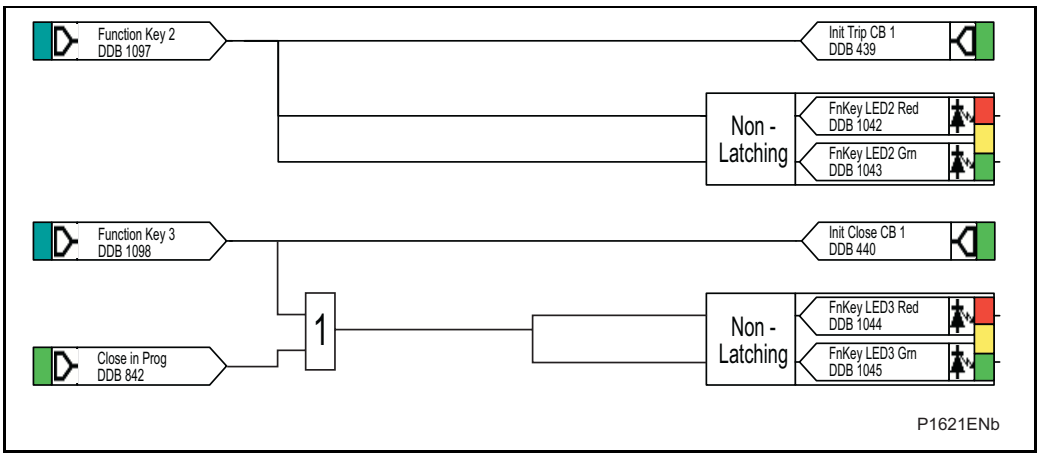

Figure 108 CB control via function keys default PSL

Function key 2 and function key 3 are both enabled and set to 'Normal' Mode and the associated DDB signals 'DDB 1097' and 'DDB 1098' will be active high '1' on key press.

The following DDB signal must be mapped to the relevant function key:

Trip CB (DDB 439) - Initiate manual circuit breaker trip

Close CB (DDB 440) - Initiate manual circuit breaker close

The programmable function key LEDs have been mapped such that the LEDs will indicate yellow while the keys are activated.

OP

5. DUAL CIRCUIT BREAKER CONTROL : P544/P546 OPERATIONAL DESCRIPTION

This section describes the P544/P546 operational control of dual circuit breakers.

5.1 INTRODUCTION

The circuit breaker control and monitoring in the dual-breaker P544/P546 provides single phase or three phase switching of a feeder controlled by two circuit breakers at a line end, for example in a one and a half switch configuration or at a mesh type (ring bus) installation. It can also be set to manage switching of a feeder controlled by a single circuit breaker

This section introduces the operation of the circuit breaker scheme. It describes the circuit breaker state monitoring, condition monitoring, circuit breaker control, and the circuit breaker auto-reclose operation.

The control of dual circuit breaker switching sequences represents a complex logic arrangement. The operation is best understood by reference to the design logic diagrams that have been used to implement the functionality. For ease of reference, all these logic diagrams have been put together in a supplementary section “P544/P546 Circuit Breaker Control and Auto-Reclose Figures” section (AR figures) at the end of this chapter. Any figures that are not explicitly presented in this chapter will be found in the AR figures section and will be clearly indicated.

The inputs and outputs of the logic described are, in many cases, DDB signals that are available to the programmable scheme logic (PSL). A description of these signals can be found in the programmable logic chapter (*P54x/EN PL*) of this manual. Other signals are also used to define the operation but are internal to the logic of the circuit breaker control. Unlike the DDB signals, these internal signals cannot be accessed using the programmable scheme logic. They are hard-coded into the application software. A second supplementary section lists these signals and provides a brief description to aid understanding.

5.2 Circuit breaker scheme designation (P544/P546)

In the dual-breaker P544/P546, the two controlled circuit breakers are designated CB1 and CB2. CB1 connects the P544/P546 to Bus1 and CB2 connects the P544/P546 to Bus 2.

It is possible to configure the P544/P546 for use in a single circuit breaker application using either CB1 control or CB2 control. If operating like this, all text, etc., associated with the unused circuit breaker is hidden.

Note: In some of the menu text, the reference to which circuit breaker is being described, is not explicitly stated (for example, **CB Operations** in the circuit breaker monitoring features). **In all such cases, an unqualified CB reference should be assumed to be associated with CB1**. **CB2** is always used to explicitly indicate CB2. An unqualified **CB** or an explicit **CB1** refers to CB1. CBx indicates either CB1 or CB2.

5.3 Circuit breaker status (P544/P546)

For each circuit breaker, the P544/P546 incorporates circuit breaker state monitoring, giving an indication of the position of each circuit breaker or, if the state is unknown, an alarm is raised.

The P544/P546 can be set to monitor normally open (52A) and normally closed (52B) auxiliary contacts of each circuit breaker. For each circuit breaker, under healthy conditions, the 52A and 52B contacts should be in opposite states. Should both sets of contacts be open, this would indicate one of the following conditions:

- Auxiliary contacts/wiring defective
- Circuit breaker is defective
- Circuit breaker is in an isolated position

Should both sets of contacts be closed, only one of the following two conditions would apply:

- Auxiliary contacts/wiring defective
- Circuit Breaker is defective

If any of the above conditions exist, an alarm will be issued after time delay as set in **CB Status time** in the CB CONTROL settings column of the menu. A normally open / normally closed output contact can be assigned to this function via the programmable scheme logic (PSL). The time delay is set to avoid unwanted operation during normal switching duties where fleeting abnormal circuit breaker status conditions may exist as the contacts change state.

Note: The **CB Status time** setting is one setting applied equally to both controlled circuit breakers.

In the CB CONTROL column of the relay menu there are two settings: **CB1 Status Input** and **CB2 Status Input**. Each cell can be set at one of the following seven options to control CB1 and/or CB2:

None	
52A	3 pole
52B	3 pole
52A & 52B	3 pole
52A	1 pole
52B	1 pole
52A & 52B	1 pole

If **None** is selected, no circuit breaker status will be available. This will directly affect any function within the relay that requires this signal, for example circuit breaker control, auto-reclose, etc..

Where only **52A** (open when the circuit breaker is open, closed when the circuit breaker is closed) is used then the relay will assume a **52B** signal from the absence of the **52A** signal. Circuit breaker status information will be available in this case but no discrepancy alarm will be available. The above is also true where only a **52B** (closed when the circuit breaker is open, open when the circuit breaker is closed) is used.

If both **52A** and **52B** are used then status information will be available and in addition a discrepancy alarm **CBx Status Alarm** (x = 1 or 2) will be possible, according to the following table. **52A** and **52B** inputs are assigned to relay opto-isolated inputs via the PSL.

Auxiliary contact position		CB state detected	Action
52A	52B		
Open	Closed	Breaker Open	Circuit breaker healthy
Closed	Open	Breaker Closed	Circuit breaker healthy
Closed	Closed	CB Failure	Alarm raised if the condition persists for greater than “CB Status time”
Open	Open	State Unknown	Alarm raised if the condition persists for greater than “CB Status time”

In the internal logic of the P544/P546, the breaker position used in the algorithm is considered to be open when the **CB State Detected** is **Breaker Open**. In all others cases, the breaker position is considered to be closed. Therefore, during operation of the circuit breaker, if the condition **52A=52B=0** or **52A=52B=1** is encountered, the circuit breaker is considered to be closed.

Where single pole tripping is used, then an open breaker condition will only be given if all three phases indicate an open condition. Similarly for a closed breaker condition, indication that all three phases are closed must be given. For single pole tripping applications 52A-a, 52A-b and 52A-c and/or 52B-a, 52B-b and 52B-c inputs should be used. The circuit breaker state monitoring logic diagrams for CB1 & CB2 are shown in AR Figure 1 and Figure 2 (logic diagram supplement).

If inputs relevant to each of the circuit breakers (CB1 and CB2) are available to the relay via the opto isolated inputs, the logic will be able to determine the state of each circuit breaker.

5.4 Circuit breaker condition monitoring (P544/P546)

Periodic maintenance of circuit breakers is necessary to ensure that the trip circuit and mechanism operate correctly and also that the interrupting capability has not been compromised due to previous fault interruptions. Generally, such maintenance is based on a fixed time interval or a fixed number of fault current interruptions. These methods of monitoring circuit breaker condition give a rough guide only and can lead to excessive maintenance. The circuit breaker monitoring features of the P544/P546 can help with more efficient maintenance regimes.

5.4.1 Circuit breaker condition monitoring features (P544/P546)

For each trip operation for each circuit breaker the relay records statistics as shown in the following table taken from the relay menu. The menu cells shown are counter values only. The Min./Max. values in this case show the range of the counter values. These cells can not be set.

Menu text	Default	Setting		Step size
		Min.	Max.	
CB1 A Operations	0	0	10000	1
Displays the total number of A phase trips issued by the relay for CB1.				
CB1 B Operations	0	0	10000	1
Displays the total number of B phase trips issued by the relay for CB1.				
CB1 C Operations	0	0	10000	1
Displays the total number of C phase trips issued by the relay for CB1.				
CB1 IA Broken	0	0	25000 In^	1
Displays the total fault current interrupted by the relay for the A phase for CB1.				

Menu text	Default	Setting		Step size
		Min.	Max.	
CB1 IB Broken	0	0	25000 In^	1
Displays the total fault current interrupted by the relay for the A phase for CB1.				
CB1 IC Broken	0	0	25000 In^	1In^
Displays the total fault current interrupted by the relay for the A phase for CB1.				
CB1 Operate Time	0	0	0.5 s	0.001
Displays the calculated CB1 operating time.				
Reset CB1 Data	No		Yes, No	
Reset the CB1 condition counters.				
CB2 A Operations	0	0	10000	1
Displays the total number of A phase trips issued by the relay for CB2.				
CB2 B Operations	0	0	10000	1
Displays the total number of B phase trips issued by the relay for CB2.				
CB2 C Operations	0	0	10000	1
Displays the total number of C phase trips issued by the relay for CB2.				
CB2 IA Broken	0	0	25000 In^	1
Displays the total fault current interrupted by the relay for the A phase for CB2.				
CB2 IB Broken	0	0	25000 In^	1
Displays the total fault current interrupted by the relay for the A phase for CB2.				
CB2 IC Broken	0	0	25000 In^	1In^
Displays the total fault current interrupted by the relay for the A phase for CB2.				
CB2 Operate Time	0	0	0.5 s	0.001
Displays the calculated CB2 operating time.				
Reset CB2 Data	No		Yes, No	
Reset the CB2 condition counters.				

The counters above may be reset to zero for example, following a maintenance inspection and overhaul. The circuit breaker condition monitoring counters will be updated every time the relay issues a trip command. In cases where the breaker is tripped by an external protection device it is also possible to update the circuit breaker condition monitoring data. This is achieved by allocating one of the P544/P546 opto-isolated inputs (via the programmable scheme logic) to accept a trigger from an external device. The signal that is mapped to the opto is called 'External Trip'.

Note: When in 'commissioning test mode' the circuit breaker condition monitoring counters will not be updated.

The measurement of circuit breaker broken current, operating time and the overall circuit breaker monitoring logic diagram, are shown in Figure 109, Figure 110, Figure 111, Figure 112, Figure 113 and Figure 114.

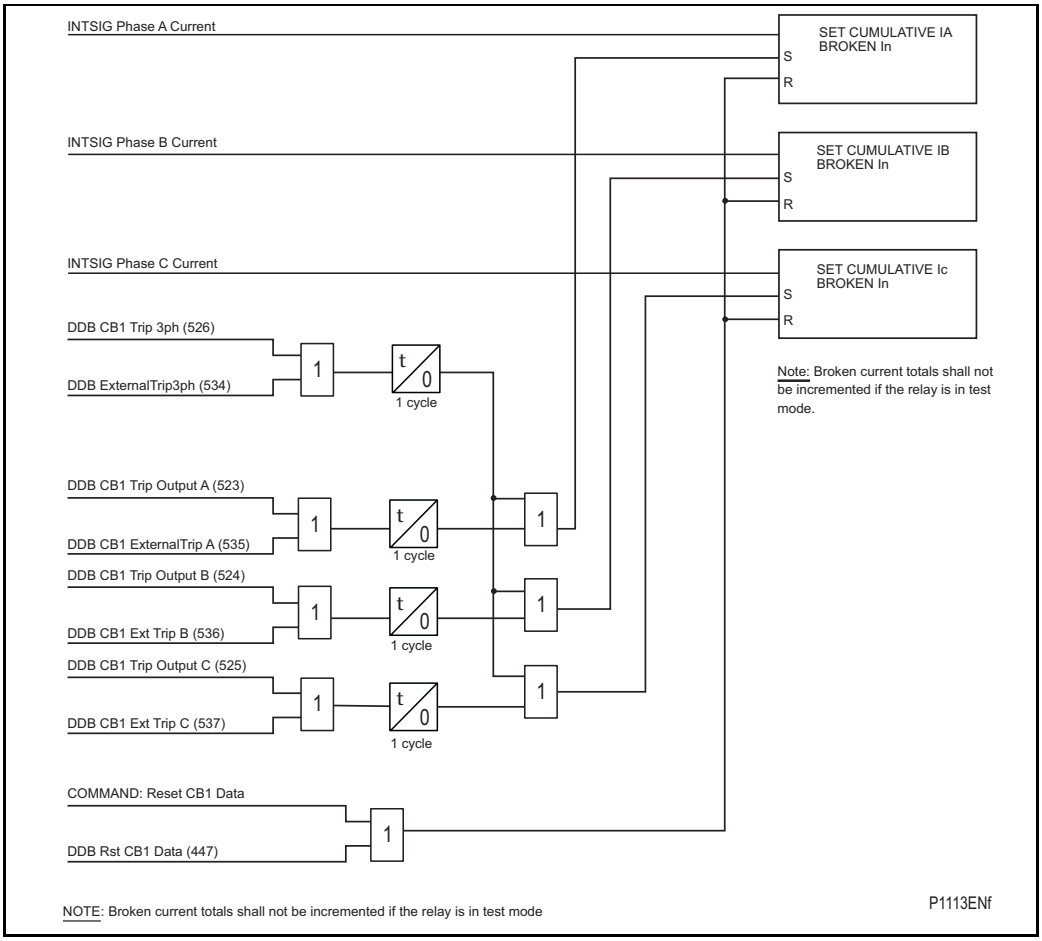

Figure 109 CB1 condition monitoring – broken current

OP

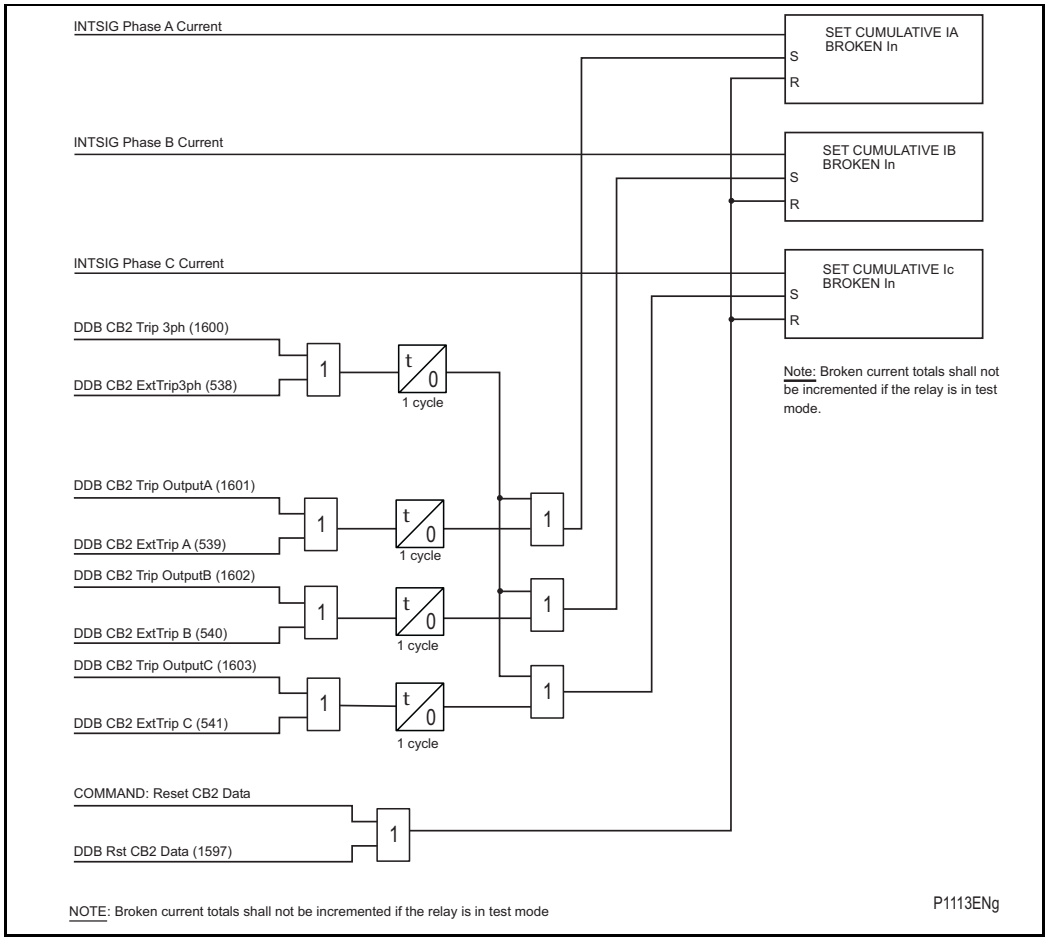

Figure 110 CB2 condition monitoring – broken current

OP

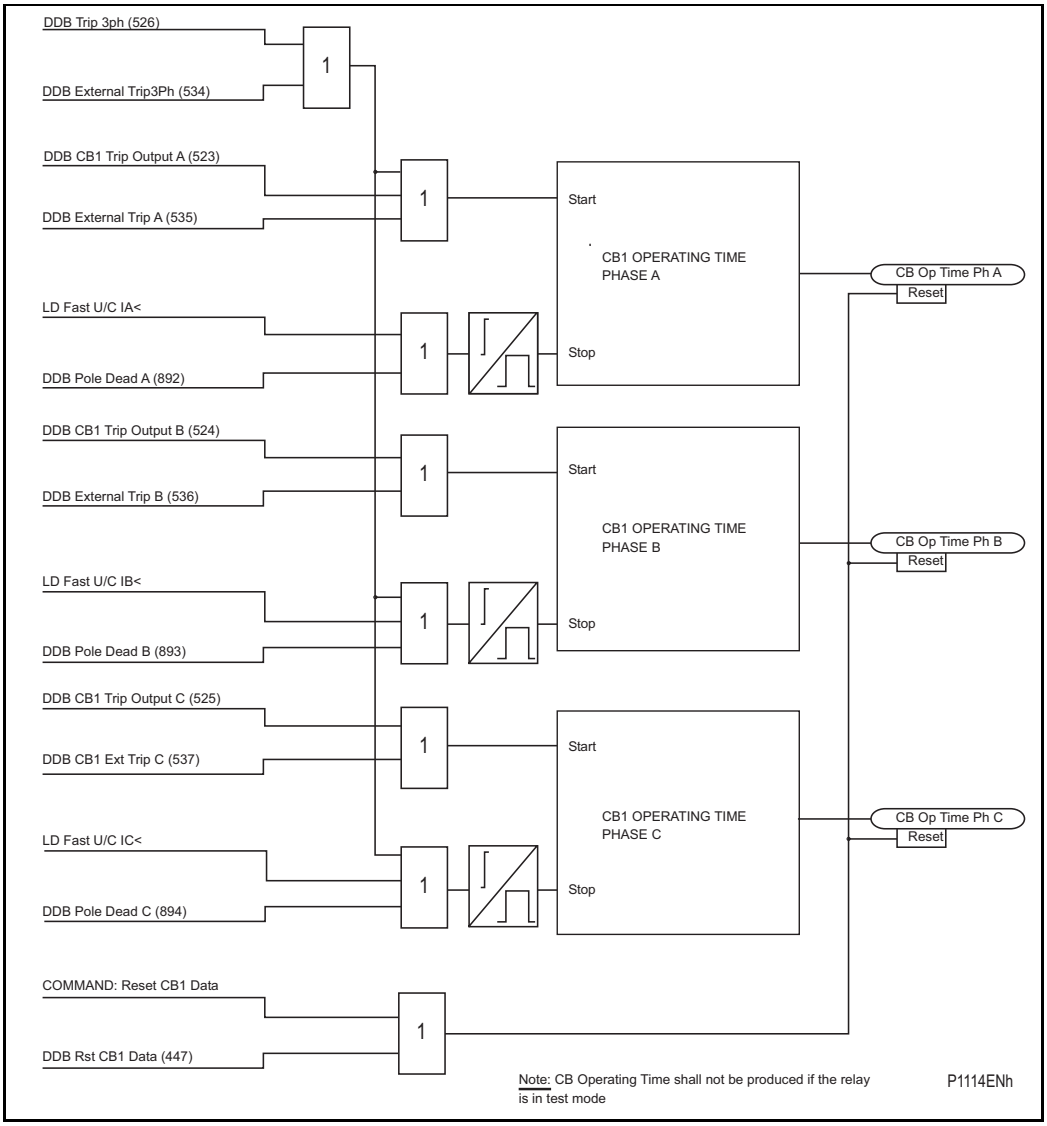

Figure 111 CB1 condition monitoring – operation time

OP

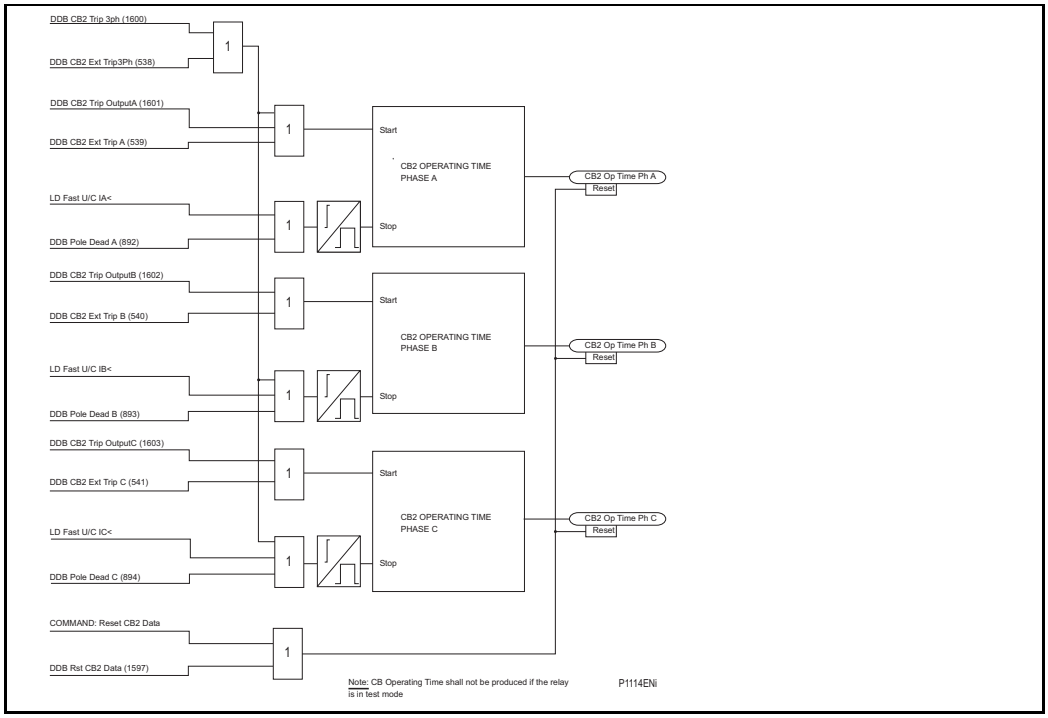

Figure 112 CB2 condition monitoring – operation time

OP

OP

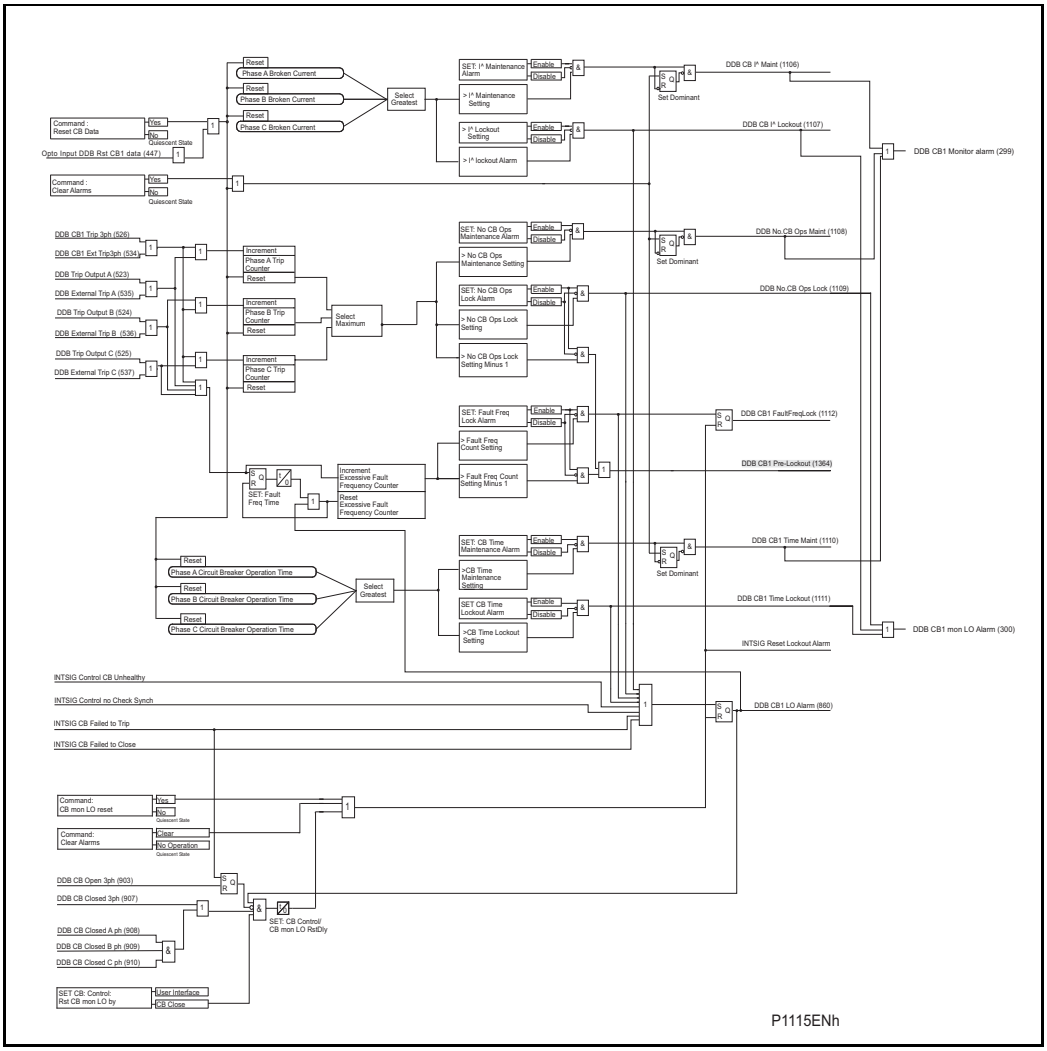

Figure 113 Circuit breaker 1 – monitoring

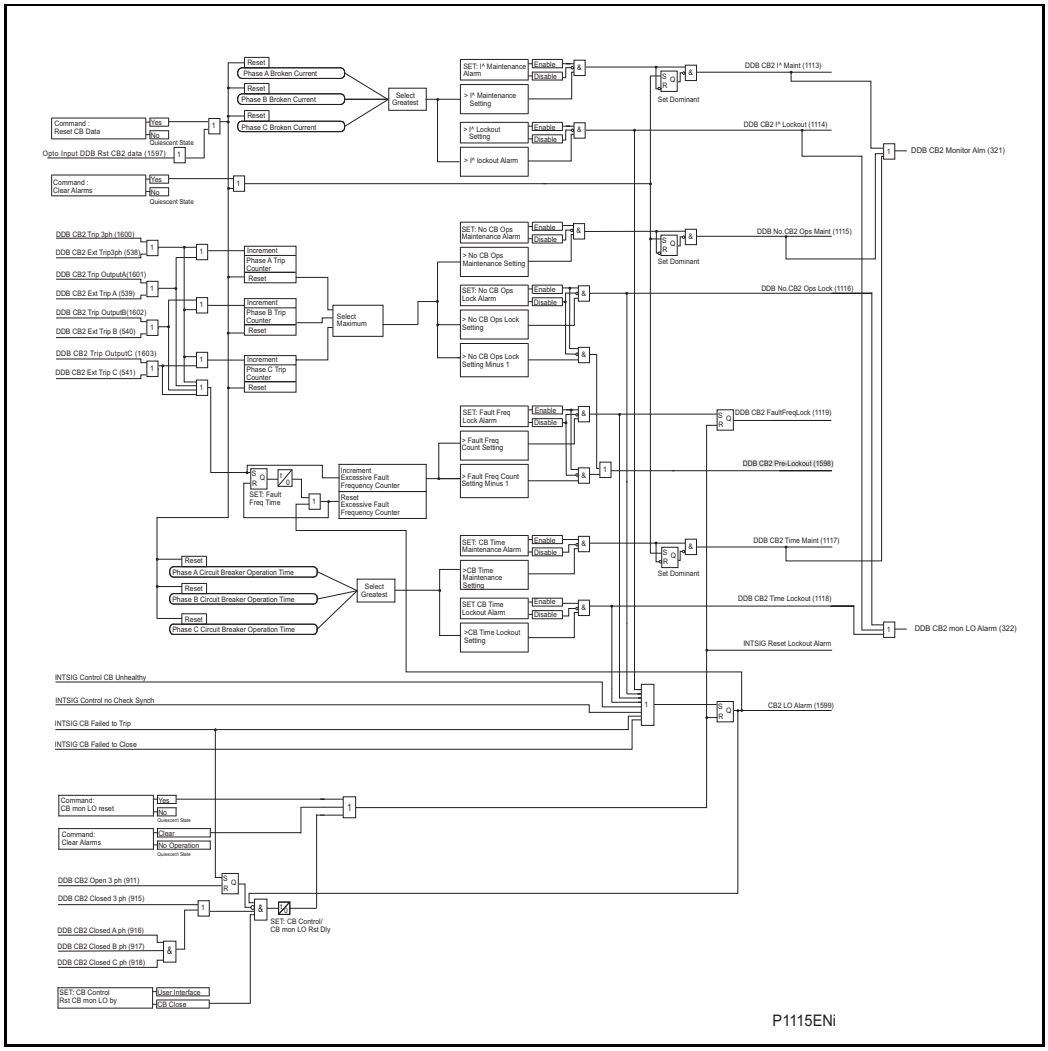

Figure 114 Circuit breaker 2 – monitoring

5.5 Circuit breaker control (P544/P546)

This functionality shows how a circuit breaker close signal from the auto-reclose logic **AutoClose CBx** (x = 1 or 2) is applied alongside operator controlled circuit breaker close and trip control

See AR Figure 43 and Figure 44 (logic diagram supplement) for CB1 & CB2 circuit breaker control respectively.

The P544/P546 includes the following options for the control of each of the two circuit breakers:

- Local tripping and closing, via the relay menu or *Hotkeys*
- Local tripping and closing, via relay opto-isolated inputs
- Remote tripping and closing, using the relay communications
- Auto-reclosing via **Auto Close CB1** or **Auto Close CB2** signal from CB1 & CB2 Auto Close logic.

It is recommended that separate relay output contacts are allocated for remote circuit breaker control and protection tripping. This enables the control outputs to be selected via a local/remote selector switch as shown in Figure 115 Where this feature is not required the same output contact(s) can be used for both protection and remote tripping.

OP

In the case of the P544/P546, the two circuit breakers may be selectively controlled both locally and remotely if relay contacts are assigned to allow a separate control trip contact and a separate control close for each circuit breaker i.e. four output relay contacts.

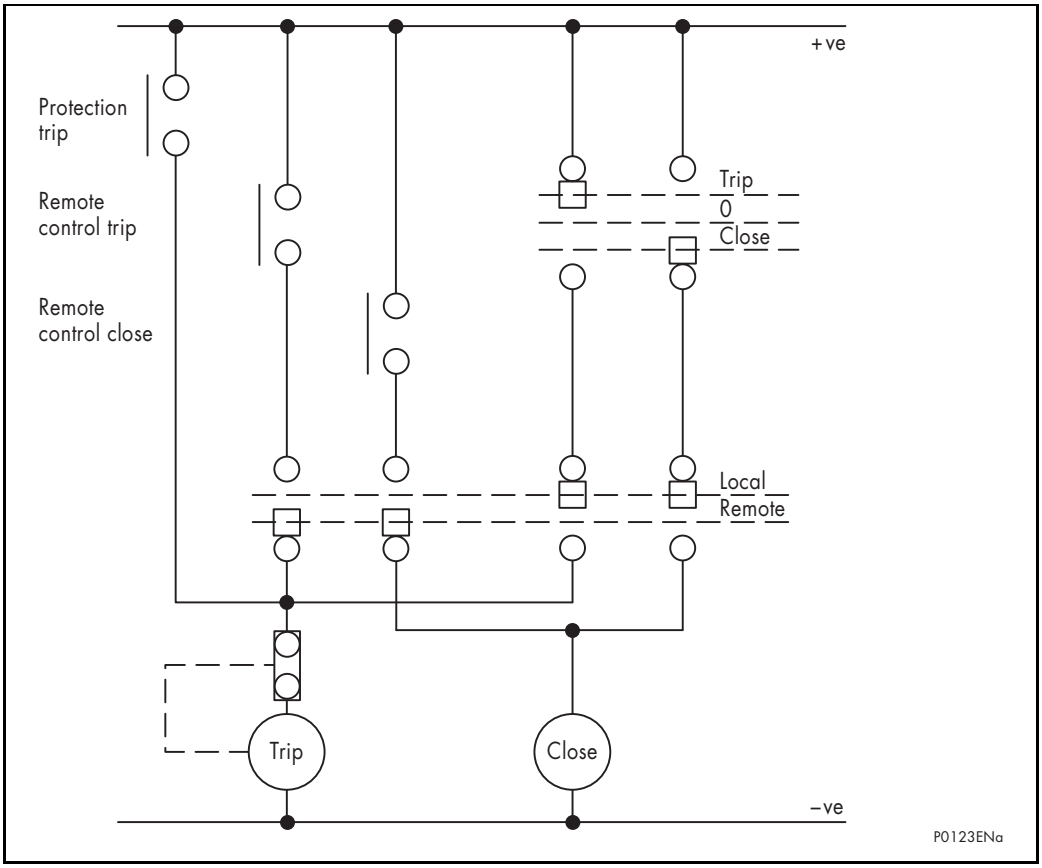

Figure 115 Remote control of circuit breaker

A manual trip will be permitted provided that the circuit breaker is initially closed. Likewise, a close command can only be issued if the circuit breaker is initially open. To confirm these states it will be necessary to use the circuit breaker 52A and/or 52B contacts (the different selection options are given from the **CBx Status Input** cell above). If no circuit breaker auxiliary contacts are available then this cell should be set to **None**. Under these circumstances no circuit breaker control (manual or auto) will be possible.

A circuit breaker close command (**Close CB1** for CB1 or **Close CB2** for CB2) will initiate closing of the circuit breaker. The output contact, however, can be set to operate following a user defined time delay ('Man Close Delay'). This is designed to give personnel time to retreat from the circuit breaker following the close command. This time delay applies to all manual circuit breaker close commands.

The control close cycle can be cancelled at any time before the output contact operates by any appropriate trip signal, or by activating DDB (443): **Rst CB1 CloseDly** for CB1 or by DDB (1419): **Rst CB2 CloseDly** for CB2.

An **Auto Close CB1** or **Auto Close CB2** signal from the **Auto close** logic bypasses the **Man Close Delay** time, and the **CB1 Close** or **CB2 Close** outputs operate immediately to close the circuit breaker.

The length of the trip or close control pulse is set via the **Trip Pulse Time**and **Close Pulse Time** settings respectively. These should be set long enough to ensure the breaker has completed its open or close cycle before the pulse has elapsed.

Note: The manual trip and close commands are found in the SYSTEM DATA column and the hotkey menu.

OP

If an attempt to close the circuit breaker is being made and a protection trip signal is generated, the protection trip command overrides the close command.

If the system check synchronism function is set, this can be enabled to supervise manual circuit breaker close commands. A circuit breaker close output will only be issued if the check synchronism criteria are satisfied. Different system check criteria can be selected for control closing CB1 and CB2. A user settable time delay (**Check Sync Time**) is included to supervise manual closure with check synchronizing criteria. If the check synchronism criteria are not satisfied in this time period following a close command the relay will lockout and alarm.

Before manual reclosure, in addition to a synchronism check, there is also a circuit breaker healthy check, **CB Healthy**, which requires the circuit breaker to be capable of closing safely (for example, having its closing spring fully charged and/or gas pressure sufficient for a close and immediate fault trip), as indicated by DDB input **CBx Healthy** (x = 1 or 2). A user settable time delay **CB Healthy Time** is included for manual closure with this check. If the circuit breaker does not indicate a healthy condition in this time period following a close command (DDB input is still low when the set time has elapsed) then the relay will lockout the relevant circuit breaker and set an alarm.

If auto-reclose is used it may be desirable to block its operation when performing a manual close. In general, the majority of faults following a manual closure will be permanent faults and it will be undesirable to allow auto-reclose.

To ensure that auto-reclosing is not initiated for a manual circuit breaker closure on to a pre-existing fault (switch on to fault), the AUTO-RECLOSE menu setting **CB IS Time** (circuit breaker in service time) should be set for the desired time window. This setting ensures that auto-reclose initiation is inhibited for a period equal to setting “CB IS Time” following a manual circuit breaker closure. If a protection operation occurs during the inhibit period, auto-reclosing is not initiated.

Following manual circuit breaker closure, if either a single phase or a three phase fault occurs during the inhibit period, the circuit breaker is tripped three phase, but auto-reclose is not locked out for this condition.

If the circuit breaker fails to respond to the control command (indicated by no change in the state of CBx Status inputs) a ‘CBx Trip Fail’ or ‘CBx Close Fail’ alarm (x = 1 or 2) will be generated after the relevant ‘Trip pulse Time’ or ‘Close Pulse Time’ has expired. These alarms can be viewed on the relay LCD display, remotely via the relay communications, or can be assigned to operate output contacts for annunciation using the relays programmable scheme logic (PSL).

Note: **CB Healthy Time** timer and **Check Sync Time** timer described in this menu section are applicable to manual circuit breaker operations only. These settings are duplicated in the auto-reclose menu for auto-reclose applications.

For the description of settings and commands related to the various methods for resetting circuit breaker lockouts, refer to section 5.6.6.18 - Reset CB Lockout.

5.5.1 Circuit breaker control using hotkeys (P544/P546)

The hotkeys allow direct access to the manual trip and close commands without the need to use the SYSTEM DATA column of the menu. Red or green color coding can be applied when used in circuit breaker control applications.

IF <<TRIP>> or <<CLOSE>> is selected the user is prompted to confirm the execution of the relevant command. If a “trip” is executed, a screen displaying the circuit breaker status will be displayed once the command has been completed. If a “close” is executed a screen with a timing bar will appear while the command is being executed. This screen has the option to cancel or restart the close procedure. The timer used is taken from the manual close delay timer setting in the **CB Control** menu. If the command has been executed, a screen confirming the present status of the circuit breaker will be displayed. The user is then prompted to select the next appropriate command or to exit - this will return to the default relay screen.

If no keys are pressed for a period of 25 seconds whilst the P544/P546 is waiting for the command confirmation, the P544/P546 will revert to showing the circuit breaker status. If no key presses are made for a period of 25 seconds whilst the P544/P546 is displaying the circuit breaker status screen, the P544/P546 will revert to the default relay screen. Figure 107 shows the hotkey menu associated with circuit breaker control functionality.

To avoid accidental operation of the trip and close functionality, the hotkey circuit breaker control commands are disabled for 10 seconds after exiting the hotkey menu.

OP

5.5.2 Circuit breaker control using function keys (P544/P546)

The function keys allow direct control of the circuit breaker if programmed to do this in the PSL. Local tripping and closing must be set in the **CB Control** menu **CB control by** cell to one of the via “opto” settings to enable this functionality. All circuit breaker manual control settings and conditions will apply for manual tripping and closing via function keys.

Figure 108 shows that the default logic can be programmed to activate this feature for CB1:

Function key 2 and function key 3 are both enabled and set to ‘Normal’ Mode and the associated DDB signals (1097) and (1098) will be active high ‘1’ on a key press.

The following DDB signals must be mapped to the relevant function key:

Init Trip CB1 (DDB 439) - Initiate manual circuit breaker CB1 trip

Init Close CB1 (DDB 440) - Initiate manual circuit breaker CB1 close

The programmable function key LED’s have been mapped such that the LED’s will indicate yellow whilst the keys are activated.

The diagram shows the control of CB1 only for simplicity. CB2 can be controlled in a similar way and the relevant DDB signals are (441) Init Trip CB2, and (442) Init Close CB2.

5.6 Single and three phase auto-reclosing (P544/P546)

The auto-reclose scheme in the P544/P546 provides single phase or three phase auto-reclosing of a feeder terminal switched by one or two circuit breakers.

With the P544/P546, the user can select to initiate auto-reclosure following any Zone 1, or distance-aided scheme trips which occur. In addition, the user can selectively decide to auto-reclose for trips from time-delayed distance zones, overcurrent and earth (ground) elements, and DEF aided schemes.

In a two circuit breaker scheme, the circuit breakers are normally arranged to reclose sequentially with one designated leader circuit breaker reclosing after a set dead time followed, if the leader circuit breaker remains closed, by the second circuit breaker after a further delay, the follower time. In the operational description, the two circuit breakers are designated as CB1 and CB2. The scheme can be configured by menu settings, by control commands, or by opto inputs to operate in any of the following modes for the first shot (first auto-reclose attempt):

Leader CB	Leader AR mode	Follower CB	Follower AR Mode
CB1	1Ph	CB2	1Ph or 3Ph
CB1	3Ph	CB2	3Ph
CB1	1/3Ph	CB2	1/3Ph or 3Ph
CB1	1Ph, 3P or 1/3Ph	No follower AR	No follower AR
CB2	1Ph	CB1	1Ph or 3Ph
CB2	3Ph	CB1	3Ph
CB2	1/3Ph	CB1	1/3Ph or 3Ph
CB2	1Ph, 3P or 1/3Ph	No follower AR	No follower AR

If **1Ph** or **1/3Ph** follower auto-reclose mode is selected, the follower can perform single phase auto-reclose only if the leader circuit breaker has performed single phase auto-reclose. If the leader has tripped and reclosed three phase, the follower is also forced to trip three phase, and will then reclose three phase provided three phase auto-reclose is permitted for the follower circuit breaker. If the follower circuit breaker trips three phase, and three phase auto-reclose is not permitted for the follower, then the follower circuit breaker will lock out without reclosing.

Single phase reclosing is permitted only for the first shot of an auto-reclose cycle. If two or more shots are enabled, then in a multi-shot auto-reclose cycle the second and subsequent trips and reclosures will be three phase.

The scheme can be configured to control a single circuit breaker installation. If the menu setting **Num CBs** is set to **CB1 Only**, all menu settings and indications relating to CB2 are redundant and hidden, and the scheme controls only CB1. If the menu setting **Num CBs** is set to **CB2 Only**, all menu settings and indications relating to CB1 are redundant and hidden, and the scheme controls only CB2. In these single circuit-breaker configurations, the selected circuit-breaker auto-reclose can be selected to **1Ph**, **3Ph** or **1/3Ph AR mode** indicating single phase, three phase, or single/three phase operation.

5.6.1 Time delayed and high speed auto-reclosing (P544/P546)

The auto-reclose function offers multi-shot auto-reclose control, selectable to perform up to a four shot cycle. Dead times (Note 1) for all shots (Note 2) are independently adjustable. Should a circuit breaker close successfully at the end of the dead time, a **Reclaim Time** starts. If the circuit breaker does not trip again, the auto-reclose function resets at the end of the reclaim time. If the protection trips again during the reclaim time the relay advances to the next shot in the programmed cycle, or, if all programmed reclose attempts have been made, the auto-reclose goes to lockout.

Note 1: Dead Time denotes the open (dead) interval delay of the CB

Note 2: A **Shot** is a reclosure attempt

5.6.2 Auto-reclose logic inputs (P544/P546)

The auto-reclose function uses inputs in the logic, which can be assigned and activated from any of the opto-isolated inputs on the relay via the programmable scheme logic (PSL). Contacts from external equipment may be used to influence the auto-recloser via the optos, noting that the circuit breaker status (open/closed) must also be available via auxiliary contact inputs to the relay.

These logic inputs can also be assigned and activated from other sources. The function of these inputs is described below, identified by their DDB signal text. The inputs can be selected to accept either a normally open or a normally closed contact, programmable via the PSL editor.

5.6.2.1 Circuit breaker healthy (P544/P546)

The majority of circuit breakers are only capable of providing one trip-close-trip cycle. Following this, it is necessary to re-establish sufficient energy in the circuit breaker (spring charged, gas pressure healthy, etc.) before the circuit breaker can be reclosed.

The DDB **CB Healthy** input is used to ensure that there is sufficient energy available to close and trip the circuit breaker before initiating a **CB Close** command. If on completion of the dead time, the DDB **CB Healthy**" input is low, and remains low for a period given by the **CB Healthy Time** timer, lockout will result and the circuit breaker will remain open

DDBs (436 & 437) are used for **CB1 Healthy** & **CB2 Healthy** respectively to enable **CB1 Close** and **CB2 Close** by auto-reclose. The **CB Healthy Time** setting is common to both CB1 and CB2.

This check can be disabled by not allocating an opto input for DDB **CB Healthy**. The signal defaults to high if no logic is mapped to DDB within the PSL in the relay

5.6.2.2 Inhibit auto-reclose (P544/P546)

An external input can be used to inhibit auto-reclose. The signal is available for mapping via the PSL from an opto input or a communications input.

The signal is **Inhibit AR**, DDB (1420). This single signal applies to both CB1 and CB2.

OP

Energising the input will cause any auto-switching to be inhibited. Any auto-reclose in progress will be reset and inhibited, but not locked out. It is provided to ensure that auto-switching does not interfere with any manual switching. A typical application would be on a mesh-corner scheme where manual switching is being performed on the mesh, for which any auto-reclose would cause interference.

If a single phase auto-reclose cycle is in progress and a single pole of the circuit breaker is tripped when this signal is raised, a ‘force three phase trip output’, (**AR Force 3 pole**, DDB (858)) will be set. This is to force the circuit breaker to trip the other phases thereby ensuring that all poles will be in the same state (and avoiding a pole stuck condition) when subsequent closing of the circuit breaker is attempted.

5.6.2.3 Block auto-reclose (P544/P546)

External inputs can be used to block auto-reclose. Two signals (one for each circuit breaker controlled) are available for mapping via the PSL from opto inputs or communications inputs.

The two signals are:

- **Block CB1 AR** DDB (448)
- **Block CB2 AR** DDB (1421).

The **Block CB AR** input, if asserted, will block the operation of the auto-reclose cycle and, if auto-reclose is in progress, it will force the circuit breaker to lockout.

Typically it is used where, dependent upon the type of protection operation, auto-reclose may, or may not, be required. An example is on a transformer feeder, where auto-reclosing may be initiated from the feeder protection but blocked from the transformer protection.

Block CB AR can also be used in cases where the auto-reclose cycle is likely to fail for conditions associated with the protected circuit. The input can be used for example if, anywhere during the dead time, a circuit breaker indicates that it is not capable of switching (low gas pressure or loss of vacuum alarm occurs).

5.6.2.4 Reset lockout (P544/P546)

The **Reset Lockout** input can be used to reset the auto-reclose function following lockout and reset any auto-reclose alarms, provided that the signals which initiated the lockout have been removed.

The following DDB signals are available for mapping in PSL from opto inputs or communications inputs :

DDB (446) Rst CB1 Lockout: Reset Lockout Opto Input to reset CB1 Lockout state

DDB (1422) Rst CB2 Lockout: Reset Lockout Opto Input to reset CB2 Lockout state

5.6.2.5 Pole discrepancy (P544/P546)

Circuit breakers with independent mechanisms for each pole normally incorporate a 'phases not together' or 'pole discrepancy' protection device which automatically trips all three phases if they are not all in the same position i.e. all open or all closed.

During single pole auto-reclosing a pole discrepancy condition is deliberately introduced and the pole discrepancy device must not operate for this condition. This may be achieved by using a delayed action pole discrepancy device with a delay longer than the single pole auto-reclose dead time, **SP AR Dead Time**.

Alternatively, a signal can be given from the relay during the single pole auto-reclose dead time, **AR 1 Pole In Progress**, to inhibit the external pole discrepancy device.

OP

In the relay, the **Pole Discrepancy** input is activated by a signal from an external device indicating that all three poles of the CB are not in the same position. The **Pole Discrepancy** inputs, DDB (451) & DDB (1606) forces a 3 pole trip on CB1 & CB2 respectively through PSL mapping.

The logic diagram for the pole discrepancy is shown in AR Figure 62 (logic diagram supplement).

5.6.2.6 External trip (P544/P546)

The **External Trip 3Ph** input and the **External Trip A**, **External Trip B** and **External Trip C** inputs can be used to initiate three or single phase auto-reclose.

Note: These signals are not used to trip the circuit breaker but do initiate auto-reclose. To trip the circuit breaker directly they could be assigned to the trip contacts of the relay in the PSL.

The following DDB signals are available for mapping in PSL from opto inputs to initiate auto-reclosing.

DDB (535): **CB1 Ext Trip A**

DDB (536): **CB1 Ext Trip B**

DDB (537): **CB1 Ext Trip C**

DDB (534): **CB1 Ext Trip 3Ph**

DDB (539): **CB2 Ext Trip A**

DDB (540): **CB2 Ext Trip B**

DDB (541): **CB2 Ext Trip C**

DDB (538): **CB2 Ext Trip 3Ph**

5.6.3 Internal signals (P544/P546)

5.6.3.1 Trip initiate signals (P544/P546)

The **Trip Inputs A**, **Trip Inputs B** and **Trip Inputs C** signals are used to initiate single or three phase auto-reclose.

Note: For single phase auto-reclose these signals must be mapped in the PSL as shown in the default.

5.6.3.2 Circuit breaker status (P544/P546)

The **CB Open 3 ph**, **CB Open A ph**, **CB Open B ph** and **CB Open C ph**, signals are used to indicate if a circuit breaker is open three or single phase. These are driven from the internal pole dead logic and the circuit breaker auxiliary inputs.

The **CB Closed 3 ph**, **CB Closed A ph**, **CB Closed B ph** and **CB Closed C ph**, signals are used to indicate if a circuit breaker is closed three or single phase. These are driven from the internal pole dead logic and the circuit breaker auxiliary inputs.

5.6.3.3 Check synch ok and system check ok (P544/P546)

OP

Internal signals generated from the internal system check function and external system check equipment are used by the internal auto-reclose logic to permit auto-reclosure.

DDB (883) **CB1 CS1 OK** & DDB (884) **CB1 CS2 OK** are output from CB1 Check Sync logic and indicate conditions for CB1 sync check stage1 & 2 are satisfied.

DDB (1577) **CB2 CS1 OK** & DDB (1463) **CB2 CS2 OK** are output from CB2 Check Sync logic and indicate conditions for CB2 sync check stage1 & 2 are satisfied.

5.6.4 Auto-reclose logic outputs (P544/P546)

The **CB1 AR 1p InProg** (DDB 845) and the **CB2 AR 1p InProg** (DDB 855) output signals indicate that single phase auto-reclose is in progress. The outputs remain high from protection initiation until lockout, or successful reclosure of the circuit breaker which is indicated by the circuit breaker successful auto-reclose signals,**CB1 Succ 1P AR** (DDB 1571) and **CB2 Succ 1P AR** (DDB 1451) generated by the logic for CB1 and CB2 respectively.

The **CB1 AR 3p InProg** (DDB 844) and **CB2 AR 3p InProg** (DDB 1411) output signals indicate that three phase auto-reclose is in progress. The outputs remain high from protection initiation until lockout, or successful reclosure of the circuit breaker which is indicated by the circuit breaker successful auto-reclose signals, **CB1 Succ 3P AR** (DDB 852) and **CB2 Succ 3P AR** (DDB 1452) for generated by the logic for CB1 and CB2 respectively.

Any auto-reclose lockout condition will reset all auto-reclose in progress signals associated with that circuit breaker (e.g. “ARIP”).

5.6.5 Auto-reclose logic operating sequence (P544/P546)

For simplicity, the auto-reclose operating sequence is described for the case of a single circuit breaker, CB1 only.

The same operating sequence would apply if CB2 only was enabled.

In a dual breaker application, the same operating sequence would apply to the leader circuit breaker and, provided the leader circuit breaker remained closed after the set dead time, the follower circuit breaker would reclose after a further delay (the follower time).

Note: In a dual circuit breaker application, the settings describing single and three phase auto-reclose **AR 1P AR 3P** and **AR 1/3P** below would change in the dual breaker case to reflect the mode of the leader circuit breaker **L1P**, **L3P**, **L1/3P**.

Following this introduction to the logic sequence, is a comprehensive description of the auto-reclose and circuit breaker operation.

An auto-reclose cycle can be internally initiated by operation of a protection element, provided the circuit breaker is closed until the instant of protection operation.

The operation of the auto-reclose sequence is controlled by the “Dead Timers”. The user can, via settings, determine what conditions will be used to initiate the dead timers as described in section 5.6.6.9. In general, however, and for the purposes of this description, the dead timers can be considered to start upon initiation of the auto-reclose cycle by the protection.

If only single phase auto-reclose **AR 1P** is enabled then the logic allows only a single shot auto-reclose. For a single phase fault, the single phase dead timer **SP AR Dead Time** starts, and the single phase auto-reclose in progress signal **CB1 AR 1p InProg** (DDB 845) is asserted. For a multi-phase fault the logic triggers a three phase trip and goes to lockout.

If only three phase auto-reclose **AR 3P** is enabled then, for any fault, the three phase dead timers: **3P AR DT Shot 1**, **3P AR DT Shot 2**, **3P AR DT Shot 3**, **3P AR DT Shot 4**, (Dead Time 1, 2, 3, 4) are started and the three phase auto-reclose in progress signal **CB1 AR 3p InProg** (DDB 844) is asserted. The logic forces a three phase trip by setting **AR Force CB1 3P** (DDB 858) for any single phase fault if only three phase auto-reclose **AR 3P** is enabled.

If single and three phase auto-reclose **AR1/3P** are enabled then, if the first fault is a single phase fault the single phase dead time **SP AR Dead Time** is started and the single phase auto-reclose in progress signal **CB1 AR 1p InProg** (DDB 845) is asserted. If the first fault is a multi-phase fault the three phase dead timer **3P AR DT Shot 1** is started and the three phase auto-reclose in progress signal **CB1 AR 3p InProg** (DDB 844) is asserted. If the relay has been set to allow more than one reclose (**AR Shots >1**) then any subsequent faults will be converted to three phase trips by setting the signal **AR Force CB1 3P** (DDB 858). The three phase dead times **3P AR DT Shot 2**, **3P AR DT Shot 3** and **3P AR DT Shot 4** (Dead Times 2, 3, 4) will be started for the 2nd, 3rd and 4th trips (shots) respectively. The three phase auto-reclose in progress signal **CB1 AR 3p InProg** (DDB 844) will be asserted. If a single phase fault evolves to a multi-phase fault during the single phase dead time (**SP AR Dead Time**) then single phase auto-reclose is stopped. The single phase auto-reclose in progress signal **CB1 AR 1p InProg** (DDB 845) is reset, the three phase auto-reclose in progress signal **CB1 AR 3p InProg** (DDB 844) is set, and the three phase dead timer **3P AR DT Shot 1** is started.

At the end of the relevant dead time, provided system conditions are suitable, a circuit breaker close signal is given. The system conditions to be met for closing are that the system voltages are in synchronism or that the dead line/live bus or live line/dead bus conditions exist, indicated by the internal system check synchronizing element, and that the circuit breaker closing spring, or other energy source, is fully charged as indicated by the **CB Healthy** input. The circuit breaker close signal is cut-off when the circuit breaker closes. For single phase auto-reclose no voltage or synchronism check is required as synchronizing power is flowing in the two healthy phases. For three phase auto-reclosing, for the first shot only, auto-reclose can be performed without checking that the voltages are in synchronism by means of a setting. This setting, **CBxL SC Shot 1**, can be set to **Enabled** to perform synch-checks on shot 1 for CB1 or CB2, or **Disabled** to not perform the checks.

When the circuit breaker has closed, the **Set CB1 Close** (DDB 1565) signal from the **CB autoclose logic** goes high and the reclaim time (“Reclaim Time”) starts. If the circuit breaker has remained closed and not tripped again when the reclaim timer expires, the auto-reclose cycle is complete, and signal **CB1 Succ 1P AR** (DDB1571) or **CB1 Succ 3P AR** (DDB 852) is generated to indicate the successful reclosure. These signals also increment the relevant circuit breaker successful auto-reclose shot counters **CB1 SUCC SPAR**, **CB1 SUCC 3PAR Shot1**, **CB1 SUCC 3PAR Shot2**, **CB1 SUCC 3PAR Shot3** and **CB1 SUCC 3PAR Shot4**, as well as resetting the circuit breaker auto-reclose in progress **CB1 ARIP** signal.

If the protection operates and circuit breaker trips during the reclaim time the relay either advances to the next shot in the programmed auto-reclose cycle, or, if all programmed reclose attempts have been made, the circuit breaker goes to lockout. Every time the relay trips the sequence counter is incremented by 1 and the reclaim time starts again after each shot, following the **Set CB1 Close** signal going high again.

For multi-phase faults the auto-reclose logic can be set to allow auto-reclose block for 2 and 3 phase faults or to allow auto-reclose block for 3 phase faults only using the setting **Multi Phase AR** in the AUTORECLOSE settings, where the options are **Allow Autoclose** , **BAR 2 & 3 ph** and **BAR 3 Phase**.

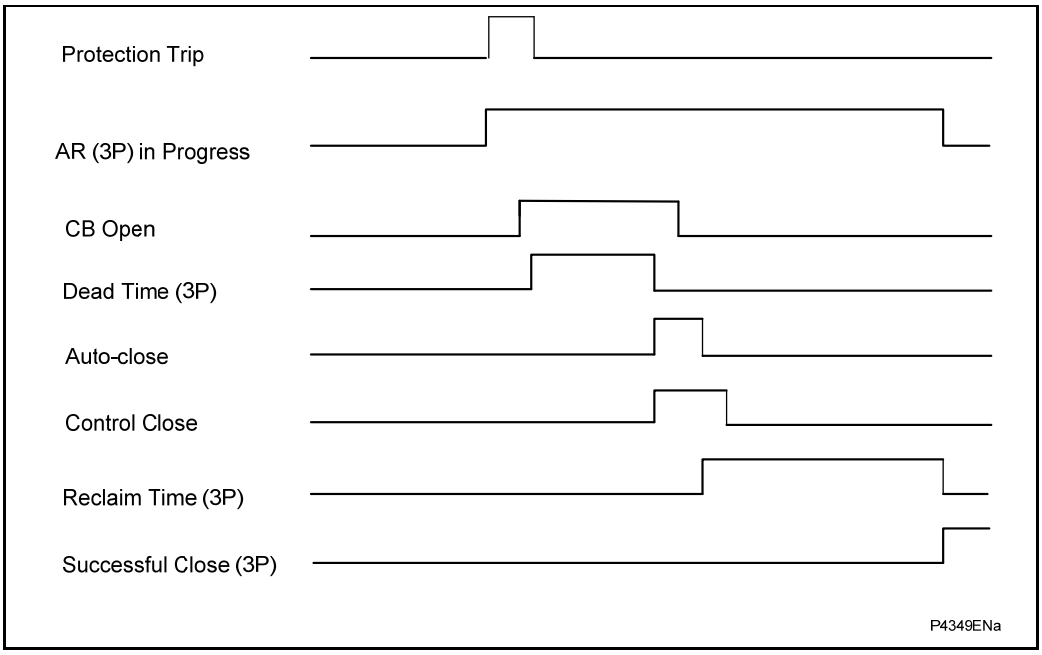

Figure 116 Auto-reclose timing diagram – single breaker, single fault

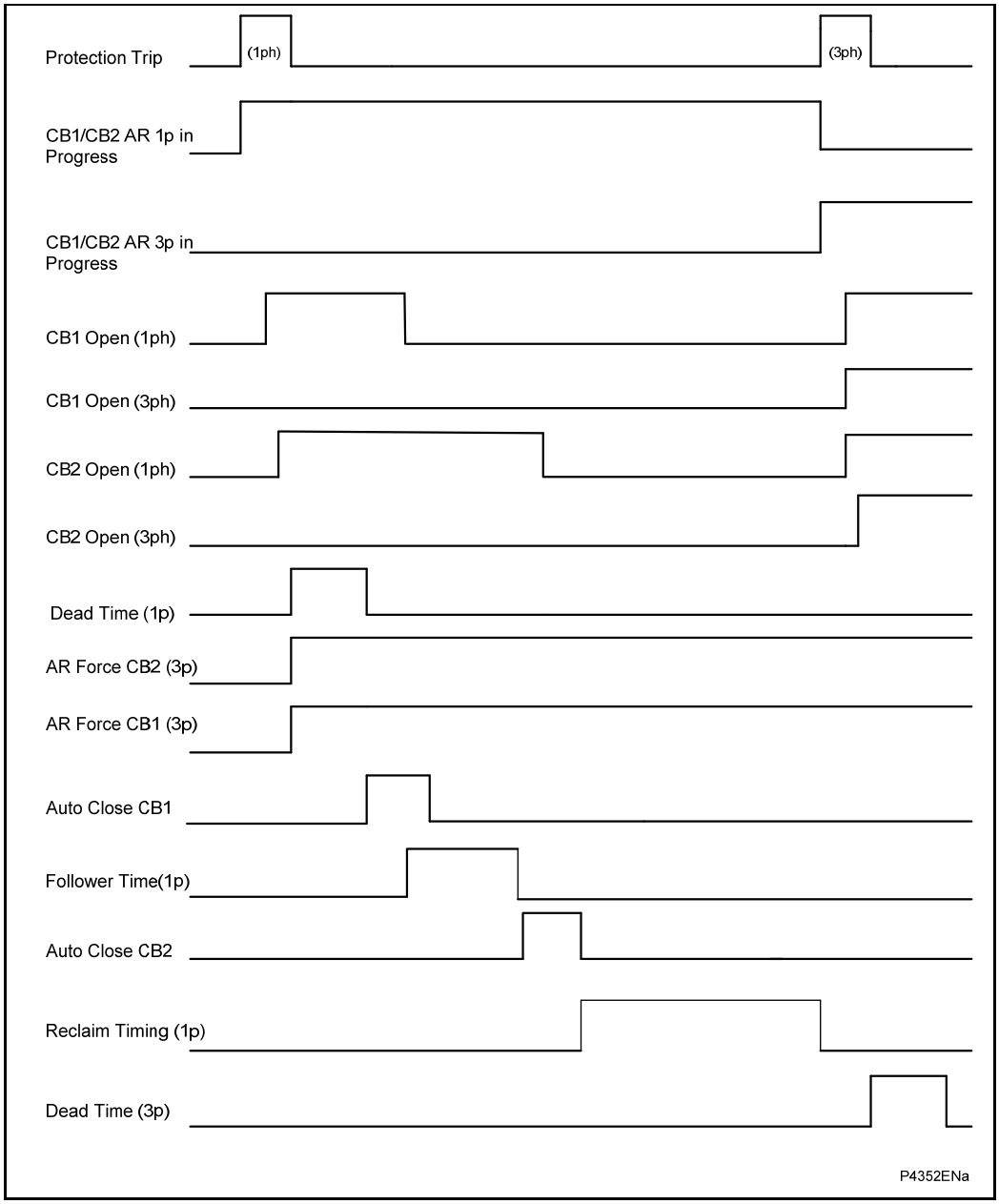

Figure 117 Auto-reclose timing diagram – repeated fault inception

OP

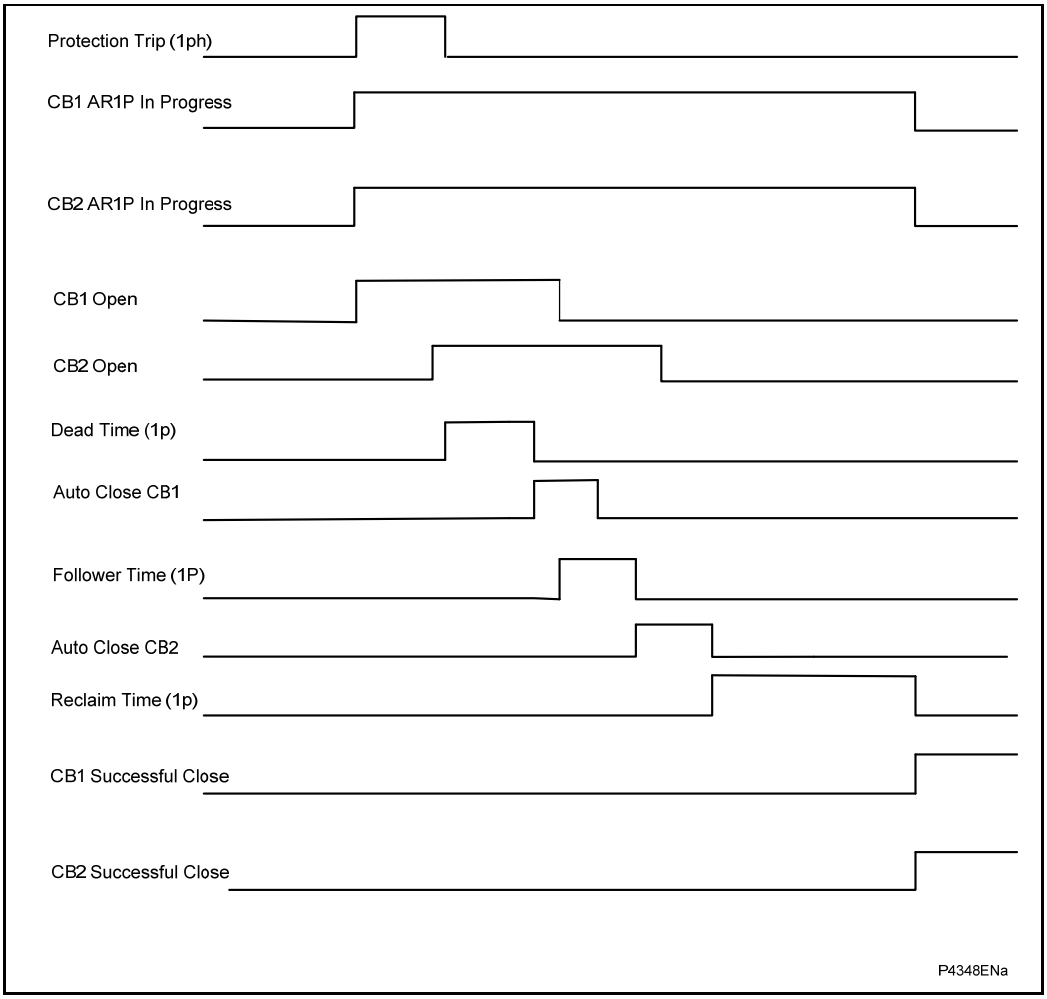

Figure 118 Auto-relose timing diagram leader/follower (1ph)

OP

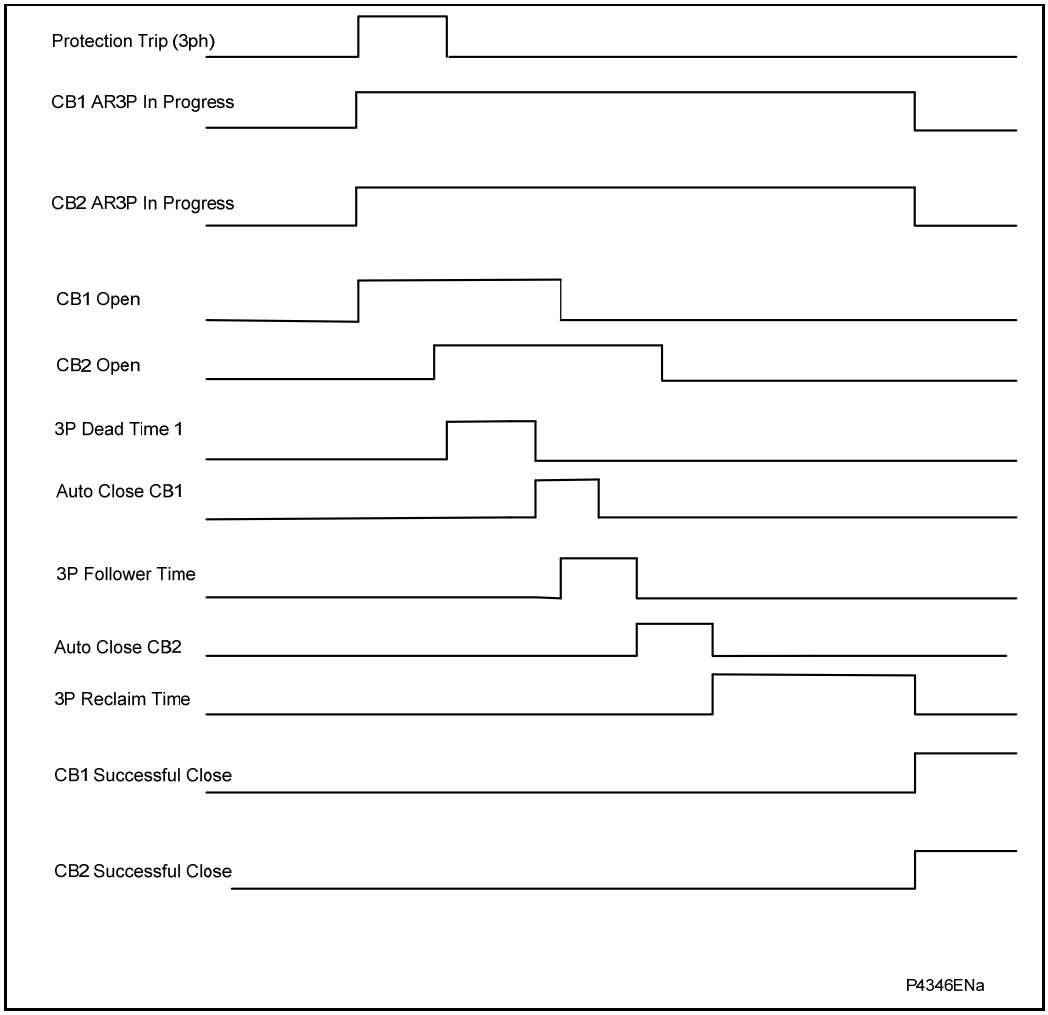

Figure 119 Auto-relose timing diagram leader/follower (3ph)

OP

5.6.6 Auto-reclose : main operating features (P544/P546)

5.6.6.1 Circuit breaker in service (P544/P546)

The circuit breaker in service logic is shown in AR Figure 4 (logic diagram supplement).

To be available for auto-reclosing, each circuit breaker has to be **in service** when the auto-reclose is initiated by a protection operation. The circuit breaker is considered to be **in service** if it has been in a closed state for a period equal to or greater than the setting **CB IS Time**.

A short adjustable time delay, **CB IS Memory Time**, allows for situations where, due to very fast acting circuit breaker auxiliary switches, when a circuit breaker trips following a fault, the circuit breaker change of state from closed to open is detected in the auto-reclose initiation logic before the **AR Initiate** signal from the protection is recognised.

Once an auto-reclose cycle has been started for the relevant circuit breaker, the **in service** signal for that circuit breaker stays set until the end of the auto-reclose cycle.

The **Bx In Service** (x = 1 or 2) signal resets if the circuit breaker opens, or if the corresponding circuit breaker auto-reclose in progress (ARIP) signal resets.

5.6.6.2 Auto-reclose enable (P544/P546)

The auto-reclose enable logic is shown in AR Figure 5 (logic diagram supplement).

A master enable/disable signal provides overall control of the auto-reclose function for the circuit breakers. If the **Auto-reclose** setting cell in the CONFIGURATION column of the menu is set to **enabled** the auto-recloser can be brought into service with other commands (described below) providing further control.

In the figure, the auto-recloser is enabled when the **AR In Service** DDB (1385) is driven high. To achieve this, as well as enabling the **Auto-reclose** setting cell in the CONFIGURATION column of the menu, conditions 1 and 2 below must be met:-

1. Auto-reclose must be enabled for at least one of the circuit breakers (CB1/CB2). This is achieved by enabling DDB input AR Enable CB1 (1609) for CB1 and/or AR Enable CB2 (1605) for CB2. Both these DDBs signals default to high if not mapped in the PSL so, if they are not mapped, this part of the logic will always be satisfied.
2. Auto-reclosing needs to be enabled from an opto input mapped to the AR Enable DDB (1384), or one of the following 3 conditions must be met :-

- A menu command from the HMI **Auto-reclose Mode** cell in the CB CONTROL column of the menu is used to bring the auto-recloser into service, or,
- For a P544/P546 having IEC 60870-5-103 communications, a standardised enable auto-reclose command is received via the communications link, or,
- The auto-recloser is brought into service by the pulsing of the **AR Pulse On** DDB (1382).

OP

The result of the logic above is the auto-reclose status. This can be seen in the data cell **AR Status** in the CB CONTROL column of the menu, and will be either **In Service** or **Out of Service**.

5.6.6.3 Leader & follower circuit breaker selection (P544/P546)

The leader and follower circuit breaker selection logic is shown in AR Figure 6 (logic diagram supplement).

The method of selecting the preferred leader and follower circuit breakers is determined by the menu setting **Leader Select By**, which can be set to **Leader by Menu**, **Leader by Opto** or **Leader by Ctrl**.

If **Leader Select By:** is set to **Leader by Menu**, a further setting, **Select Leader:**, becomes visible and is used to select the preferred leader circuit breaker by setting **Select Leader:** either to **Sel Leader CB1** or **Sel Leader CB2**.

If **Leader Select By:** is set to **Leader by Opto**, the preferred leader circuit breaker is determined by the status of the input DDB (1408): **CB2 Lead**. If the input DDB (1408) **CB2 Lead** is low, then preferred leader circuit breaker is CB1. If DDB **CB2 Lead** is high then it selects CB2 as the preferred leader.

If **Leader Select By**: is set to **Leader by Control**, then the preferred leader circuit breaker is determined by the user control command **CTRL CB2 Lead** cell found under the CB CONTROL column in the relay menu. If the command applied is **Reset CB2 Lead**, CB1 is selected as the preferred leader. Applying **Set CB2 Lead** command selects CB2 as the preferred leader.

If **Num CBs** is set to **Both CB1 &CB2**, either CB1 or CB2 can be selected as leader. If the setting **Num CBs** is set to **CB1 Only**, CB1 is selected as leader. Similarly, CB2 is selected as leader if the setting **Num CBs** is set to **CB2 Only**.

Provided that the circuit breaker is available for auto-reclose (i.e. the circuit breaker is: **in service**, not locked out, and enabled for auto-reclosing {refer sections 5.6.6.2 and 5.6.6.4}), the “preferred” leader circuit breaker will be the “active” leading circuit breaker in the auto-reclose cycle.

If the “preferred” leader circuit breaker is not available for auto-reclosing then, provided it is available for auto-reclose, the “non-preferred” circuit breaker becomes the “active” leader. If this is the case there will be no follower circuit breaker.

If both circuit breakers are available for auto-reclosing and follower reclosing is enabled, then the “preferred leader” will be the “active” leader and the “non-preferred” circuit breaker will be the follower.

5.6.6.4 Auto-reclose mode for leader & follower circuit breaker (P544/P546)

The auto-reclose mode for the leader and follower circuit breaker logic is shown in AR Figure 9(logic diagram supplement).

Once auto-reclosing is enabled, the specific reclosing modes which can be applied to each circuit breaker are selected.

The auto-reclose function has three operating modes:

- Single Phase Auto-reclose (1P)
- Three Phase Auto-reclose (3P)
- Single/Three Phase Auto-reclose(1/3P)

Single phase reclosing is permitted only for the first shot of an auto-reclose cycle. If two or more shots are enabled, then, in a multi-shot auto-reclose cycle, the second and subsequent trips and reclosures will always be three phase.

The settings for the reclosing modes are affected by the number of circuit breakers, **Num CBs**, setting in the AUTO-RECLOSE column of the menu.

5.6.6.4.1 Auto-reclose mode with one circuit breaker (P544/P546)

If **Num CBs** is set to **CB1 Only** or **CB2 Only**, only one circuit breaker will be controlled, and a setting **AR Mode** is visible which controls the specific auto-reclosing mode for the active circuit breaker.

The following setting options are available: **AR 1P**, **AR 1/3P**, **AR 3P** & **Opto**.

Single phase auto-reclosing of the circuit breaker is permitted if **AR Mode** is set to **AR 1P** or **AR 1/3P**. Three phase auto-reclosing of the circuit breaker is permitted if **AR Mode** is set to **AR 3P** or **AR 1/3P**.

If the **AR Mode** selection is by **Opto** then the reclose mode for the active circuit breaker is determined by the status of two DDB inputs: **Lead AR 1P** (1497) to enable single phase auto-reclose, and **Lead AR 3P** (1498) to enable three phase auto-reclose.

5.6.6.4.2 Auto-reclose mode with two circuit breakers (P544/P546)

If **Num CBs** is set to **Both CB1&CB2** then a setting **Lead/Foll ARMode** becomes visible and is used to control the specific reclosing modes that are applied to each circuit breaker. The options available are :-

L1P F1P

L1P F3P

L3P F3P

L1/3P F1/3P

L1/3P F3P

Opto

Where L refers to the leader circuit breaker, F refers to the follower circuit breaker, 1P implies single phase, 3P implies three phase, and 1/3P implies single or three phase, so a setting of **L1/3P F3P** would mean that the leader circuit breaker could perform single or three phase auto-reclose, whilst the follower would perform three phase auto-reclose only.

If the auto-reclose mode selection is by **Opto** then the reclose mode for the active leader is determined by the status of two DDB inputs: **Lead AR 1P** (1497) to enable single phase auto-reclose, and "**Lead AR 3P**" (1498) to enable three phase auto-reclose. The reclose mode for the active follower is determined by the status of two DDB inputs: **Follower AR 1P** (1409) to enable single phase auto-reclose, and **Follower AR 3P** (1410) to enable three phase auto-reclose.

Where the selected follower auto-reclose mode supports single phase tripping, the follower can perform single phase auto-reclose only if the leader circuit breaker has performed single phase auto-reclose. If the leader has tripped and reclosed three phase, the follower is also forced to trip three phase. The follower will reclose three phase provided three phase auto-reclose is permitted for the follower circuit breaker. If the follower circuit breaker trips three phase and three phase auto-reclose is not permitted for the follower, then the follower circuit breaker locks out without reclosing.

5.6.6.5 Force three phase trip (P544/P546)

The **force three phase trip** logic is shown in AR Figure 10 (logic diagram supplement).

OP

Following single phase tripping, whilst the auto-reclose cycle is in progress, and upon resetting of the protection elements, an output signal DDB associated with the tripped circuit breaker is asserted high.

In the case of CB1, this is DDB: **AR Force CB1 3P** (858).

In the case of CB2, this is DDB: **AR Force CB2 3P** (1485).

These signals are applied to any associated protection trip conversion logic to force all protection trips to be converted to three phase trips for the associated circuit breaker, for any subsequent faults that occur whilst the auto-reclose cycle remains in progress.

5.6.6.6 Auto-reclose Initiation (P544/P546)

The auto-reclose initiation logic is shown in AR Figure 11, Figure 12, Figure 13 and Figure 14 (logic diagram supplement).

Auto-reclose cycles can be initiated by :-

- Protection functions hosted by the P544/P546
- External protection equipment
- Trip test

Auto-reclose initiation will start an auto-reclose for any circuit breaker that is in service and enabled for auto-reclose: CB1 auto-reclose will start if CB1 is in service and enabled for auto-reclose; CB2 auto-reclose will start if CB2 is in service and enabled for auto-reclose.

When an auto-reclose cycle is started, the relevant circuit breaker auto-reclose in progress **CB1 ARIP** and/or **CB2 ARIP** signal is set, and remains set until the end of the cycle for the associated circuit breaker. The end of the cycle is signified by successful reclosure, or by lockout.

5.6.6.6.1 Auto-reclose initiation by host relay protection function (P544/P546)

Many protection functions in the P544/P546 (for example differential trips, Zone 1 trips, distance-aided scheme trips, time-delayed distance zones, overcurrent and earth (ground) elements, DEF and directional aided schemes.) can be programmed to initiate or block auto-reclose by selecting the **Initiate AR**, or **Block AR** options in the settings which are available under the **AUTORECLOSE** settings column of the menu. Operation of a protection function selected for auto-reclose will initiate auto-reclose. Operation of a protection function selected to block auto-reclose will block and force a lockout.

5.6.6.6.2 Auto-reclose initiation by external protection equipment (P544/P546)

The following DDB signals are available for mapping in the PSL from opto inputs or communication inputs to initiate auto-reclosing.

DDB (535): **CB1 Ext Trip A**

DDB (536): **CB1 Ext Trip B**

DDB (537): **CB1 Ext Trip C**

DDB (534): **CB1 Ext Trip 3Ph**

DDB (539): **CB2 Ext Trip A**

DDB (540): **CB2 Ext Trip B**

DDB (541): **CB2 Ext Trip C**

DDB (538): **CB2 Ext Trip 3Ph**

If mapped, activation of the input to the DDB will initiate auto-reclose.

5.6.6.6.3 Auto-reclose initiation and cycle by trip test (P544/P546)

A user command (**Test Autoreclose** under COMMISSION TESTS) in the P544/P546 menu can be used to initiate an auto-reclose cycle. Four separate commands can be executed, each command comprising a 100 ms pulse output when the relevant “execute” option is selected. Available commands are: **Trip Pole A** / **Trip Pole B** / **Trip Pole C2** / **Trip 3 Pole**. There is also a **No Operation** option to exit the command field without initiating a test.

5.6.6.7 Sequence counter (P544/P546)

The sequence counter logic is shown in AR Figure 18 (logic diagram supplement).

The auto-reclose logic includes a counter known as the sequence counter. Unless auto-reclose is in progress, the sequence counter will have a value of 0. Following a trip, and subsequent auto-reclose initiation, the sequence counter is incremented. The counter provides output signals indicating how many initiation events have occurred in any auto-reclose cycle. These signals are available as user indications and are used in the logic to select the appropriate dead timers or, for a persistent fault, force a lockout.

The logic generates the following sequence counter outputs which are used in the auto-reclose shots counter logic (refer section 5.6.6.14).

DDB 847: **Seq. Counter = 1** is set when the counter is at 1;

DDB 848: **Seq. Counter = 2** is set when the counter is at 2;

DDB 849: **Seq. Counter = 3** is set when the counter is at 3; and

DDB 850: **Seq. Counter = 4** is set when the counter is at 4.

Every time the relay trips the sequence counter is incremented by 1. The auto-reclose logic compares the sequence counter values to the number of auto-reclose shots setting, **AR Shots**. If the counter value exceeds the setting then the auto-reclose is locked out.

In the case of a successful auto-reclose cycle the sequence counter resets to zero.

5.6.6.8 Auto-reclose cycle selection (P544/P546)

The auto-reclose cycle selection determines, for a dual breaker configuration, the logic to determine which of the circuit breakers will act as leader/follower and whether the reclosing will be single phase or three phase. The logic is shown in AR Figure 19 and Figure 21 (logic diagram supplement).

In a dual circuit breaker arrangement, when an auto-reclose cycle is started, single phase or three phase reclosing is asserted for each circuit breaker, according to whether the circuit breaker has tripped single phase or three phase, and according to whether single phase

and/or three phase reclosing is permitted for that circuit breaker. Dependent upon the settings and trip performed, each circuit breaker can perform:-

- Single phase reclose as Leader (with or without follower);
- Single phase reclose as Follower (provided the leader is also selected to single phase auto-reclose);
- Three phase reclose as Leader (with or without follower);
- Three phase reclose as Follower;

5.6.6.9 Dead time control (P544/P546)

The dead time control logic is shown in AR Figure 22, Figure 24, Figure 25 and Figure 26 (logic diagram supplement).

Once an auto-reclose cycle has started, the conditions to enable the dead time to run are determined by menu settings, circuit breaker status, protection status, the nature of the auto-reclose cycle (single phase or three phase) and opto inputs from external sources.

Three settings are involved in controlling the dead time start :-

- **DT Start by Prot**
- **3PDTStart WhenLD**
- **DTStart by CB Op**.

The **DT Start by Prot** setting is always visible and has three options **Protection Reset**, **Protection Op**, and **Disable**. These options set the basic conditions for starting the dead time.

The ‘dead time started by protection operation’ condition can, optionally, be qualified by a check that the line is dead.

The ‘dead time started by protection reset’ condition can, optionally, be qualified by a check, that the circuit breaker is open, as well as by an optional check that the line is dead (note*).

If the **DT Start by Prot** is set to **Disable**, the circuit breaker must be open for the dead time to start. This condition can, optionally be qualified by a check that the line is dead (note*).

The qualification to check that the ‘line is dead’ is provided by setting **3PDTStart WhenLD** to **Enabled**.

The qualification to check that the ‘circuit breaker is open’ is provided by setting **DTStart by CB Op** to **Enabled**.

In a dual circuit breaker scheme (**Num CBs** set to **Both CB1 & CB2**) if the **DTStart by CB Op** is set to enabled, both circuit breakers must be tripped to enable the dead time to start. For a single phase auto-reclose cycle, the leader circuit breaker has to be tripped single phase. For a three phase auto-reclose cycle, both circuit breakers have to be tripped three phase.

Note*: This is only applicable when tripping/auto-reclose is three phase.

5.6.6.10 Follower circuit breaker enable and time control (P544/P546)

The follower circuit breaker control logic is shown in AR Figure 27, Figure 28 and Figure 29 (logic diagram supplement).

When a leader/follower auto-reclose cycle is initiated, the conditions for the follower delay period (**Follower Time**) to start are determined by the leader circuit breaker operation, the follower circuit breaker status, the menu setting **BF if LFail Cls** (Block Follower reclose if Leader CB Fails to close), and opto inputs from external sources. The basic condition to start the follower delay is that the leader circuit breaker must have reclosed.

If the menu setting **BF if LFail Cls** is set to **Disabled**, the follower circuit breaker will reclose even if the leader circuit breaker fails to reclose (for example, due to the absence of a **CB Healthy** signal). When **BF if LFail Cls** is set to **Disabled**, an additional menu setting **Dynamic F/L** becomes visible to further control the operation of the follower circuit breaker. If the setting **Dynamic F/L** is set to **Enabled**, the follower circuit breaker will reclose with no deliberate additional delay, i.e. at approximately the same instant that the leader circuit breaker would have closed if it had been healthy. If the menu setting **Dynamic F/L** is set to **Disabled**, the follower circuit breaker will reclose after an additional delay equal to the set **Follower Time**.

If the menu setting **BF if LFail Cls** is set to **Enabled** then, if the leader circuit breaker fails to reclose, the follower circuit breaker cycle is cancelled and auto-reclosing of both circuit breakers is locked out.

The follower circuit breaker must be open for the follower delay time to start. For a single phase follower auto-reclose cycle, the follower circuit breaker has to be open single phase. For a three phase follower auto-reclose cycle, the follower circuit breaker has to be open three phase.

When the follower delay time has timed out, the relevant internal signal **CBxSPFTCOMP** or **CBx3PFTCOMP** (x = 1 or 2) is applied to the **CB AutoClose** logic, described later in section 5.6.6.11 to indicate that the follower time is complete.

5.6.6.11 CB1 and CB2 auto close (P544/P546)

The CB1 and CB2 auto close logic is shown in AR Figure 32 and Figure 33 (logic diagram supplement).

When the end of a dead time or the end of a follower time is indicated by one of the following internal signals, the auto close logic is executed :-

- **CB1 SPDTCOMP**
- **CB1 3PDTCOMP**
- **CB2 SPDTCOMP**
- **CB2 3PDTCOMP**
- **CB1 SPFTCOMP**
- **CB1 3PFTCOMP**
- **CB2 SPFTCOMP**
- **CB2 3PFTCOMP**

The auto close logic checks that all necessary conditions are satisfied before issuing a **AutoClose CB1** or **AutoClose CB2** signal to the CB1 and CB2 overall control scheme as shown in the AR Figure 43 and Figure 44 (logic diagram supplement) described in section 5.5.

For any reclosure, the circuit breaker must be healthy (mechanism OK to close, and retrip if necessary) and it should not be in a lockout state.

For any single phase reclosure, the circuit breaker must be open on one phase. For any three phase reclosure, the circuit breaker must be open on all three phases and the appropriate system check conditions (live bus/dead line, synch check etc) must be satisfied. The system check conditions for CB1 leader reclose, CB2 leader reclose, CB1 follower reclose and CB2 follower reclose are independently selectable by menu settings and are described in section 5.6.6.15.

The auto close signals (**AutoClose CB1**, **AutoClose CB2**) sent to the circuit breaker control scheme are pulses lasting 100 milliseconds. Another pair of signals **Set CB1 Close** & **Set CB2 Close**, DDBs (1565/1449) are set in conjunction with the auto close signals, but these remain set until either the end of the auto-reclose cycle, or the next protection operation. These signals are used to initiate the **Reclaim timing logic** and the **CB AR Shots Counters** logic, described in sections 5.6.6.12 to 5.6.6.14.

5.6.6.12 Reclaim time & successful auto-reclose (P544/P546)

The reclaim time logic is shown in AR Figure 34 and Figure 35 (logic diagram supplement).

The successful auto-reclose logic is shown in AR Figure 36, Figure 37 and Figure 38 (logic diagram supplement).

The **Set CB1 Close** & **Set CB1 Close**, DDBs (1565/1449) signals from the auto close logic are used to enable the reclaim timers. Depending on whether the circuit breaker has tripped single phase or three phase, and whether single phase and/or three phase reclosing is permitted for the circuit breaker, either the single phase reclaim timer **SPAR Reclaim Time** or the three phase reclaim timer **3PAR Reclaim Time** is enabled.

If any protection re-operates before the reclaim time has timed out, the sequence counter is incremented. The counter signal advances from 'Seq Counter = n' to 'Seq Counter = (n+1)', resets any ….**DTCOMP** signal and prepares the logic for the next dead time to start when conditions are suitable. The operation also resets the **Set CB Close** signal, and hence the reclaim timer is also stopped and reset. The **Reclaim time** starts again if the **Set CB Close** signal goes high following completion of a dead time in a subsequent auto-reclose cycle.

If CB1 is closed and has not tripped again when the reclaim time is complete, signals **CB1 Succ 1P AR**, (DDB1571) or **CB1 Succ 3P AR**, (DDB 852) are generated to indicate the successful reclosure.

OP

Similarly, If CB2 is reclosed during the auto-reclose cycle and remains closed when the reclaim time is complete, signals **CB2 Succ 1P AR**, (DDB 1451) or **CB2 Succ 3P AR**, (DDB 1452) are generated to indicate successful reclosure.

These signals also increment the relevant circuit breaker successful auto-reclose shot counters and reset the relevant **CB ARIP** signal.

The **successful auto-reclose** signals generated from the logic can be reset by various commands and settings options available under CB CONTROL menu settings column.

These settings are described below:-

If **Res AROK by UI** is set to enabled, all the **successful auto-reclose** signals can be reset by user interface command **Reset AROK Ind** from the CB CONTROL settings column.

If **Res AROK by NoAR** is set to enabled, the **successful auto-reclose** signals for each circuit breaker can be reset by temporarily generating an **AR disabled** signal for each circuit breaker according to the logic described in section 5.6.6.21, **Autoreclose Enable** logics, AR Figure 5.

If **Res AROK by Ext** is set to enabled, the **successful autoreclose** signals for can be reset by activation of the relevant input **Ext Rst CB1 AROK** or **Ext Rst CB2 AROK** (DDB1517 or 1417) mapped in the PSL.

If **Res AROK by TDly** is set to enabled, the **successful autoreclose** signals for are automatically reset after a user defined time delay as set in **Res AROK by TDly** setting.

5.6.6.13 Circuit breaker healthy & system check timers (P544/P546)

The circuit breaker healthy and system check timers logic is shown in AR Figure 39 and Figure 40 (logic diagram supplement).

This logic provides signals to cancel auto-reclosing for either circuit breaker if the circuit breaker is not healthy (e.g. low gas pressure or, for three phase auto-reclosing, the required line & bus voltage conditions are not satisfied) when the scheme is ready to close the circuit breaker.

In this logic, both CB1 and CB2 share the settings **AR CBHealthy Time** and **AR CheckSync Time**.

For either circuit breaker, at the completion of any dead time or follower time, the logic starts an **AR CBHealthy timer**. If the **CB Healthy** signal (DDB 436 or 437) becomes high before the set time is complete, the timer stops and, if all other relevant circuit breaker closing conditions are satisfied the scheme issues the **CB AutoClose** signal. If the **CB Healthy** signal, (DDB 436 or 437) signal stays low, then at the end of the set **AR CBHealthy time** an **AR CB Unhealthy** alarm signal (DDB 307 or 329) is set. This forces the circuit breaker auto-reclose sequence to be cancelled.

Additionally, for either circuit breaker, at the completion of any three phase dead time or three phase follower time, the logic starts an **AR CheckSync Time**. If the circuit breaker synchro-check OK signal {"CB L SCOK " (DDB 1573 or1455) or **CB F SCOK** (DDB1491 or1456)} goes high before the set time is complete, the timer stops and, if all other relevant circuit breaker closing conditions are satisfied, the scheme issues the **CB AutoClose** signal. If the **System check OK** signal stays low, then at the end of the **AR CheckSync Time** an alarm **AR CB No C/S** (DDB 308 or 330) is set which informs that the check synchronism is not satisfied for that circuit breaker and forces the auto-reclose sequence to be cancelled.

5.6.6.14 CB1 & CB2 auto-reclose shots counters (P544/P546)

The CB1 & CB2 auto-reclose shots counter logic is shown in AR Figure 41and Figure 42 (logic diagram supplement).

A number of counters are provided to enable analysis circuit breaker auto-reclosing history. Each circuit breaker has a set of counters that are stored in non-volatile memory, so that the data is maintained even in the event of a failure of the auxiliary supply.

Logic signals from the **Sequence counters** is combined with **successful auto-reclose** signals and **auto-reclose lockout** signals to provide the following summary for each circuit breaker:-

- Overall total shots (No. of reclose attempts);
  - **CBx Total Shots**
- Number of successful single phase reclosures;
  - **CBx SUCC SPAR**
- Number of successful 1st shot three phase reclosures;
  - **CBx SUCC3PARShot1**
- Number of successful 2nd shot three phase reclosures;
  - **CBx SUCC3PARShot2**
- Number of successful 3rd shot three phase reclosures;
  - **CBx SUCC3PARShot3**
- Number of successful 4th shot three phase reclosures;
  - **CBx SUCC3PARShot4**
- Number of failed auto-reclose cycles which forced CB to lockout.
  - **CBx Failed Shots**

All the counter contents are accessible through the CB CONTROL column of the menu.

For each individual circuit breaker, these counters can be reset either by user commands **Reset CB1 Shots** or **Reset CB2 Shots** from the CB CONTROL settings column, or by activation of the relevant input **Ext Rst CB1 Shots** or **Ext Rst CB2 Shots** (DDB 1518 or 1418) mapped in the PSL.

5.6.6.15 System checks for circuit breaker closing (P544/P546)

The system checks for circuit breaker closing logic is shown in AR Figure 45, Figure 46, Figure 47, Figure 48, Figure 51 and Figure 52 (logic diagram supplement).

For three phase auto-reclosing and control closing of the circuit breakers, system voltage checks are separately selectable for :-

- CB1 reclosing as leader;
- CB1 reclosing as follower;
- CB1 control close;
- CB2 reclosing as leader;
- CB2 reclosing as follower;
- CB2 control close.

In the AUTORECLOSE settings, if the **Num CBs** is set to **CB1 Only** or **CB2 Only**, then the operation of the circuit breaker will be the same as described for the corresponding leader circuit breaker (for example CB1 operation will be the same as described by CB1L in the diagrams and descriptions.

The system check options for each circuit breaker are enabled or disabled in the **CBx SC all** setting (x = 1L, 2L, 1F, 2F) in the AUTORECLOSE column of the menu. If set to **Disabled**, then no system checks are required on any shot, and the relevant settings are invisible. Otherwise, the system check options that can be enabled for each breaker (as leader or follower) are :-

System check option	Setting
System checks not required for first shot of auto-reclose	**CBx SC Shot1**
Fast synchronism check (note 2)	**CBx SC ClsNoDly**
Check synchronism stage 1 (note 1)	**CBx SC CS1**
Check synchronism stage 2 (note 1)	**CBx SC CS2**
Dead line / Live Bus	**CBx SC DLLB**
Live Line / Dead bus	**CBx SC LLDB**
Dead line / Dead bus	**CBx SC DLDB**

Note 1: Two separate (independent) system synchronism check stages are available for each circuit breaker. Each stage has different slip frequency and phase angle settings as described in section 5.7.

Note 2: A **fast synchronism check auto-reclose** option is available for the three phase auto-reclose as leader circuit breaker, by menu setting **CBx SC ClsNoDly**. When the setting is enabled, then if the line and bus come into synchronism (i.e. line energised from remote end) at any time after the three phase dead time has started, a **AutoClose CB** signal is issued immediately without waiting for the dead time to elapse. This option is sometimes required for the second line end to reclose on a line with delayed auto-reclosing (typical cycle: first line end reclose after dead time with live bus & dead line, then second line end reclose immediately with live bus & live line in synchronism).

Manual reclosing for each circuit breaker is controlled according to the settings in the SYSTEM CHECKS column of the menu. The system check options for each circuit breaker are enabled or disabled in the **CBxM SC all** setting (x = 1 or 2) in the SYSTEM CHECKS column of the menu. If set to **Disabled**, then no system checks are required for manual closure, and the relevant settings are invisible. Otherwise, the system check options that can be enabled for each breaker (as leader or follower) are :-

System check option	Setting
Check synchronism stage 1 (refer note 1 above)	**CBxM SC CS1**
Check synchronism stage 2 (refer note 1 above)	**CBxM SC CS2**
Dead line / Live Bus	**CBxM SC DLLB**
Live Line / Dead bus	**CBxM SC LLDB**
Dead line / Dead bus	**CBxM SC DLDB**

5.6.6.16 CB1 & CB2 trip time monitor (P544/P546)

The circuit breaker trip time monitor logic is shown in AR Figure 53 and Figure 54 (logic diagram supplement).

This logic checks that a circuit breaker trips correctly following the issuing of a protection trip signal.

When any protection trip signal is issued a timer, **Trip Pulse Time** is started.

The **Trip Pulse Time** setting is common to both CB1 and CB2 and is used in the trip time monitor logic and in the circuit breaker control logic.

If the circuit breaker trips correctly (single phase or three phase, according to the trip signal and settings) the timer resets and the auto-reclose cycle, if enabled, proceeds normally. If either circuit breaker fails to trip correctly within the set time, the signal **CB1 Fail Pr Trip** (1575) and/or **CB2 Fail Pr Trip** (1459) is issued and the affected circuit breaker auto-reclose cycle is forced to lock out.

5.6.6.17 Autoreclose lockout (P544/P546)

The auto-reclose lockout logic is shown in AR Figure 55, Figure 55a, Figure 56, and Figure 56a (logic diagram supplement).

Auto-reclose lockout of a circuit breaker will be triggered by a number of events. These are outlined below:-

- Protection operation during reclaim time. If, following the final reclose attempt, the protection operates during the reclaim time, the relay will be driven to lockout and the auto-reclose function will be disabled until the lockout condition is reset.
- Persistent fault. A fault is considered persistent if the protection re-operates after the last permitted shot.
- Block auto-reclose. The block auto-reclose logic can cause a lockout if auto-reclose is in progress. If asserted, the **Block CBx AR** input (DDB 448 /1421) mapped in the PSL will, if auto-reclose is in progress, block auto-reclose and cause a lockout.
- Multi phase faults. The logic can be set to block auto-reclose either for two phase or three phase faults, or to block auto-reclose for three phase faults only. For this, the setting **Multi Phase AR** applies, where the options are **Allow AR**, **BAR 2&3 Phase** & **BAR 3 Phase** in the AUTORECLOSE column of the menu.
- Protection function selection. The protection functions can be individually selected to block auto-reclose and force lockout. If enabled, the protection functions in the AUTORECLOSE column of the menu can be set to **Block AR**. Selecting **Block AR** will cause a lockout if the particular protection function operates.

- Circuit breaker failure to close. If the circuit breaker fails to close because, for example, the circuit breaker springs are not charged, the gas pressure is low, or there is no synchronism between the system voltages indicated by the **AR CBx Unhealthy** and **AR CBx No Checksyn**c alarms, auto-reclose will be blocked and forced to lockout.
- Circuit breaker open at the end of the reclaim time. An auto-reclose lockout is forced if the circuit breaker is open at the end of the reclaim time.
- Circuit breaker fails to close when the close command is issued.
- Block follower if leader fails to close is set. If the setting **BF if Lfail Cls** in the AUTORECLOSE column of the menu is set to **Enable**, the active follower circuit breaker will lockout if the leader circuit breaker fails to reclose.
- Circuit breaker fails to trip correctly.
- Three phase dead time started by line dead violation. If the line does not go dead within the **Dead Line Time** time setting when the dead time start is determined by the menu setting **3PDTStart WhenLD**, the logic will force the auto-reclose sequence to lockout after expiry of the setting time.
- Single phase evolving to multi phase fault. If, after expiry of the discriminating time from the **Protection Re-operation + Evolving** fault logic (refer section 5.6.6.8), a single phase fault evolves into a two, or three phase fault, the internal signal **Evolve Lock** will be asserted that will force the auto-reclose to lockout.

- Leader/Follower invalid selection via opto. If the **Leader/Follower AR** mode in the AUTORECLOSE menu is set to be selected via the opto-inputs, **Opto**, then if the logic detects an invalid auto-reclose mode combination selection, it will force both CB1 & CB2 to lockout if a trip occurs.

If CB1 or CB2 is locked out, the logic generates the alarms **CBx AR Lockout** (DDB 306 /328) for the corresponding circuit breaker. In this condition, auto-reclose of the circuit breaker cannot be initiated until the corresponding lockout has been reset. The methods of resetting from the lockout state are discussed in the next section.

Circuit breaker lockout, can also be caused by the circuit breaker condition monitoring functions:-

- Maintenance lockout,
- Excessive fault frequency lockout,
- Broken current lockout,
- Circuit breaker failed to trip,
- Circuit breaker failed to close,
- Manual close failure - no check synchronism / circuit breaker unhealthy situation.

These lockout alarms are mapped to a signals **CBx mon LO Alarm** (DDBs 300 & 322 for CB1 and CB2 respectively) and **CBx LO Alarm**. (DDBs 860 & 1599 for CB1 and CB2 respectively).

5.6.6.18 Reset circuit breaker lockout (P544/P546)

The lockout conditions caused by the circuit breaker condition monitoring functions (including manual close failure) described in section 5.6.6.17 can be reset according to the condition of the **Rst CB mon LO by** setting found in the CB CONTROL column of the menu.

The **Rst CB mon LO by** setting has two options **CB Close**, and **User interface**.

If **Rst CB mon LO By** is set to **CB Close** then closure of the circuit breaker will be a trigger for lockout reset. If set to **CB Close**, a further setting, **CB mon LO RstDly**, becomes visible. This is a timer setting that is applied between the circuit breaker reclosing, and the lockout being reset.

If **Rst CB mon LO By** is set to **User Interface** the a further command appears in the the CB CONTROL column of the menu, **CB mon LO reset**. This command can be used to reset the lockout.

This logic is included in the Figure 113 and Figure 114 (CB Monitoring figure).

An auto-reclose lockout state of a circuit breaker will generate an auto-reclose circuit breaker lockout alarm (**AR CBx lockout**) and DDB 306 or 328 is set, corresponding to CB1 or CB2 being locked out, as per the logic diagrams in AR Figure 57 and Figure 58.

The auto-reclose lockout conditions can be reset by various commands and settings options found under the CB CONTROL column of the menu.

These settings and commands are described below:-

If **Res LO by CB IS** is set to **Enabled**, the circuit breaker lockout is reset if the circuit breaker is manually closed successfully. For this the circuit breaker must remain closed long enough so that it enters the “In Service” state. (See section 5.4, **Circuit Breaker In Service** and Figure 109, Figure 110, Figure 111, Figure 112, Figure 113 and Figure 114.

If **Res LO by UI** is set to **Enabled**, the circuit breaker lockout can be reset by the user interface commands **Reset CB1 LO** or **Reset CB2 LO** found in the CB CONTROL column of the menu.

If **Res LO by NoAR** is set to **Enabled**, the circuit breaker lockout can be reset by temporarily generating an “AR disabled” signal according to the logic described in section 5.6.6.2, “Auto-reclose Enable” logic and AR Figure 5.

If **Res LO by ExtDDB** is set to **Enabled**, the circuit breaker lockout can be reset by activation of the relevant input DDB **Rst CB1 Lockout** or **Rst CB2 Lockout** (DDB 446 / 1422) mapped in the PSL.

If **Res LO by TDelay** is set to **Enabled**, the circuit breaker lockout is automatically reset after a user defined time delay as set in **LO Reset Time** setting.

The reset circuit breaker auto-reclose lockout logic is shown in AR Figure 57 and Figure 58 (logic diagram supplement).

5.7 Dual circuit breaker system voltage checks (P544/P546)

5.7.1 Dual circuit breaker system checks overview (P544/P546)

In some situations it is possible for both “bus” and “line” sides of a circuit breaker to be live when the circuit breaker is open, for example at the ends of a feeder which has a power source at each end. Therefore, when closing the circuit breaker, it is normally necessary to check that the network conditions on both sides are suitable, before giving a CB Close command. This applies to both manual circuit breaker closing and auto-reclosure. If a circuit breaker is closed when the line and bus voltages are both live, with a large phase angle, frequency or magnitude difference between them, the system could be subjected to an unacceptable shock, resulting in loss of stability, and possible damage to connected machines.

System checks involve monitoring the voltages on both sides of a circuit breaker, and, if both sides are live, performing a synchronism check to determine whether the phase angle, frequency and voltage magnitude differences between the voltage vectors, are within permitted limits.

The pre-closing system conditions for a given circuit breaker depend on the system configuration and, for auto-reclosing, on the selected auto-reclose program. For example, on a feeder with delayed auto-reclosing, the circuit breakers at the two line ends are normally arranged to close at different times. The first line end to close usually has a live bus and a dead line immediately before reclosing, and charges the line (dead line charge) when the circuit breaker closes. The second line end circuit breaker sees live bus and live line after the first circuit breaker has re-closed. If there is a parallel connection between the ends of the tripped feeder, they are unlikely to go out of synchronism, i.e. the frequencies will be the same, but the increased impedance could cause the phase angle between the two voltages to increase. Therefore the second circuit breaker to close might need a synchronism check, to ensure that the phase angle has not increased to a level that would cause unacceptable shock to the system when the circuit breaker closes.

If there are no parallel interconnections between the ends of the tripped feeder, the two systems could lose synchronism, and the frequency at one end could “slip” relative to the other end. In this situation, the second line end would require a synchronism check comprising both phase angle and slip frequency checks.

If the second line end busbar has no power source other than the feeder that has tripped; the circuit breaker will see a live line and dead bus assuming the first circuit breaker has re-closed. When the second line end circuit breaker closes the bus will charge from the live line (dead bus charge).

5.7.2 Dual circuit breaker system voltage checks logic diagrams (P544/P546)

The system voltage checks logic is shown in AR Figure 59, Figure 60 and Figure 61 (logic diagram supplement).

5.7.3 Dual circuit breaker system voltage checks VT selection (P544/P546)

The system voltage checks function performs a comparison of the line voltage and the bus voltage.

For a single circuit breaker application, there will be two voltage inputs to compare – one from the voltage transformer (VT) input from the line side of the circuit breaker, and one from the VT on the bus side of the circuit breaker.

For a dual circuit breaker installation (breaker-and-a-half switch or mesh/ring bus), three VT inputs are required, one from the common point of the two circuit breakers, identified as the line, one from the bus side of CB1, and the third from the bus side of CB2. In most cases the line VT input will be three phase, whereas the bus VTs will be single phase.

Since the bus VT inputs are normally single phase, the system voltage checks are made on single phases, and since the VT may be connected to either a phase to phase or phase to neutral voltage, then for correct synchronism check operation, the P544/P546 has to be programmed with the appropriate connection. The **CS Input** setting in the **CT AND VT RATIOS** can be set to **A-N**, **B-N**, **C-N**, **A-B**, **B-C** or **C-A** according to the application.

The single phase Bus1 VT and Bus 2 VT inputs each have associated phase shift and voltage magnitude compensation settings **CB1 CS VT PhShft**, **CB1 CS VT Mag.**, **CB2 CS VT PhShft** and **CB2 CS VT Mag.**, to compensate for healthy voltage angle and magnitude differences between the Bus VT input and the selected line VT reference phase. This allows the bus VT inputs to be taken from VT windings with different rated voltages or phase connections to the reference voltage (for example, they could be taken from VTs on opposite sides of a transformer). Any voltage measurements or comparisons using bus VT inputs are made using the compensated values.

The system checks logic comprises two modules, one to monitor the voltages, and one to check for synchronism.

The voltage monitor determines the voltage magnitudes, frequencies and relative phase angles of the VT inputs using the same VT inputs as the check sync reference phase voltage setting **CS Input**, The **Live Line**, **Dead Line**, etc., outputs from the voltage monitor are qualified by blocking inputs from the P544/P546, external VT supervision, VT secondary MCB auxiliary switch contacts, and by external inputs mapped in the PSL to DDBs (1522, etc.) to individually inhibit the output DDBs (888, etc.) for each function.

5.7.4 Dual circuit breaker system voltage synchronism checks (P544/P546)

Two synchronism check stages are provided for each circuit breaker to compare the line and bus voltages when closing a circuit breaker.

Synchronism check logic is enabled or disabled per circuit breaker, by settings **Sys Checks CB1** to **Enable** or **Disable**, and **Sys Checks CB2** to **Enable**, or **Disable**.

If **System Checks CB1** is set to **Disable**, all other menu settings associated with system checks and synchronism checks for CB1 become invisible, and a DDB (880) signal **SChksInactiveCB1** is set.

Similarly if **System Checks CB2** is set to **Disable**, all other menu settings associated with system checks and synchronism checks for CB2 become invisible, and a DDB (1484) signal **SChksInactiveCB2** is set.

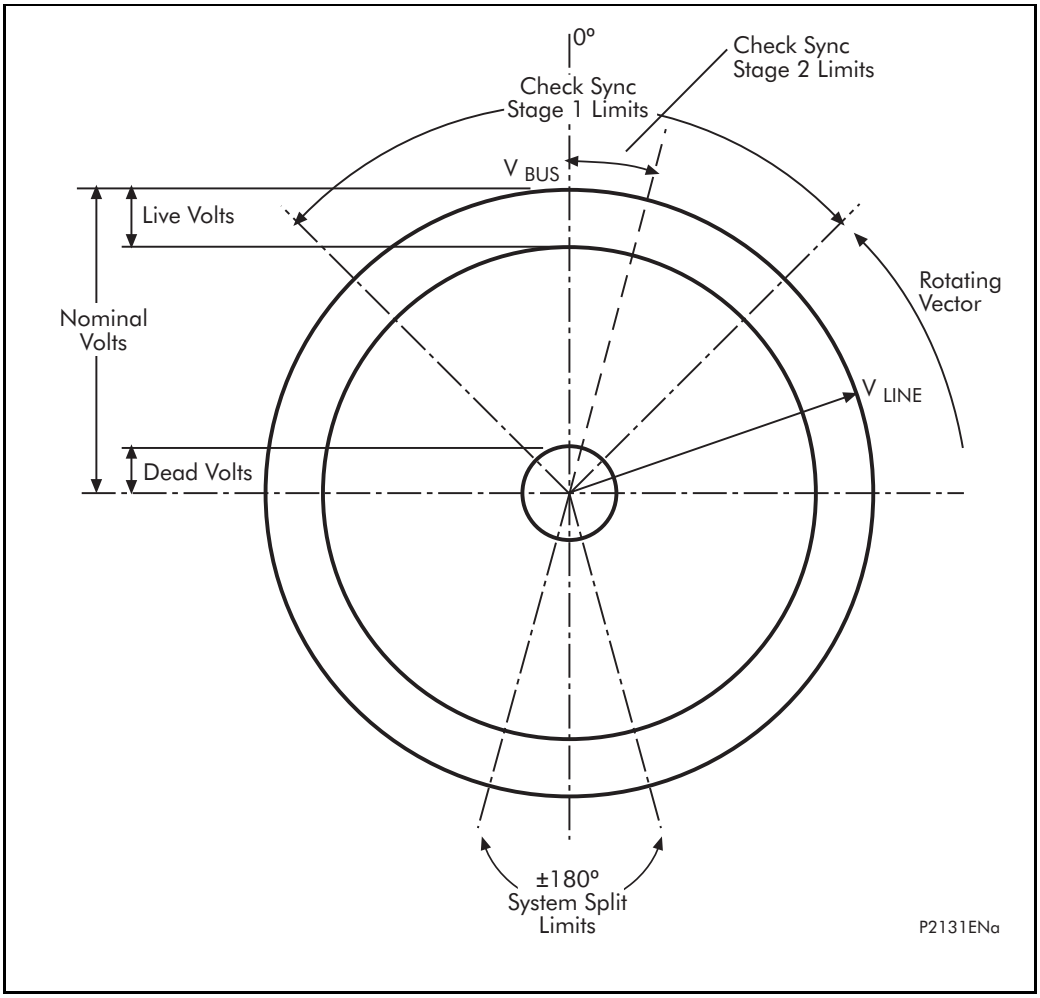

Figure 120 Synchro check functionality (P544/P546)

The overall check synchronism functionality is illustrated in Figure 120

OP

5.8 Synchronism check functions (P544/P546)

5.8.1 Overview

Two stages of system synchronism check supervision are provided for each circuit breaker. When required, they control the manual closing and/or auto-reclosing of the associated circuit breaker. **CB1 CS1** and **CB1 CS2** supervise CB1, while **CB2 CS1** and **CB2 CS2** supervise CB2.

The functionality of the first two stages (CB1 CS1 and CB2 CS1) is the same for each, but each circuit breaker has individual settings.

The functionality of the second two stages (CB1 CS2 and CB2 CS2) is the same for each, with each circuit breaker having individual settings, and the functionality is similar to the first stages, but the second stages have an additional “adaptive” setting.

The synchronism check function in P544/P546 relays can be set to provide appropriate synchronism check supervision of circuit breaker closing for either synchronous or asynchronous systems.

5.8.2 Synchronous systems and asynchronous systems/system split

Systems in which the frequency difference (“slip frequency”) between the voltages on either side of an open circuit breaker is practically zero are described as “synchronous”. Such systems are typically interconnected by other circuits in parallel with the open circuit breaker, which help to maintain synchronism even while the circuit breaker is open.

Systems which are electrically separated when a specific circuit breaker is open do not have parallel connections of sufficiently low impedance to maintain synchronism, and in the absence of any power flow between them the frequencies can drift apart, giving a significant slip frequency. Such systems are described as “asynchronous” or “split”, and are recognised by a measured slip frequency greater than the limiting slip frequency setting for synchronous systems.

5.8.3 Synchronism check functions provided in the P544/P546

Two independently settable synchronism check functions are provided for each circuit breaker controlled by the relay. CB1 CS1 and/or CB1 CS2 can be applied to supervise closing of circuit breaker CB1. CB2 CS1 and/or CB2 CS2 can be applied to supervise closing of circuit breaker CB2.

CB1 CS1 and CB2 CS1 are designed to be applied for synchronism check on synchronous systems, while CB1 CS2 and CB2 CS2 provide additional features which may be required for synchronism check on asynchronous systems. In situations where it is possible for the voltages on either side of a circuit breaker to be either synchronous or asynchronous depending on plant connections elsewhere on the system, both CBx CS1 and CBx CS2 can be enabled, to provide a permissive close signal if either set of permitted closing conditions is satisfied.

Each synchronism check function, as well as having the basic maximum phase angle difference and slip frequency settings, can also be set to inhibit circuit breaker closing if selected “blocking” conditions such as overvoltage, undervoltage or excessive voltage magnitude difference are detected. In addition, CB1 CS2 and CB2 CS2 each require the phase angle difference to be decreasing in magnitude to permit circuit breaker closing, and each has an optional “Adaptive” closing feature to issue the permissive close signal when the predicted phase angle difference immediately prior to the instant of circuit breaker main contacts closing (i.e. after CB Close time) is as close as practicable to zero.

Slip frequency can be defined as the difference between the voltage signals on either side of the circuit breaker, and represents a measure of the rate of change of phase between the two signals.

Having two system synchronism check stages available for each circuit breaker allows the circuit breaker closing to be enabled under different system conditions (for example, low slip / moderate phase angle, or moderate slip / small phase angle).

When the check synchronism criteria is satisfied, a DDB signal “CBx CSy OK” is set (x = 1 or 2, y = 1 or 2).

For **CB1 CS1 OK** DDB (883) to be set, the following conditions are necessary:

- Settings **Sys Checks CB1** and **CB1 CS1 Status** must **both** be Enabled;
  AND
- **Live Line** and **Live Bus 1** signals are both set;
  AND
- None of the selected **CB1 CS1 Volt. Blk** conditions (V<, V>, VDiff) are true;
  AND
- The measured phase angle magnitude is less than the **CB1 CS1 Angle** setting;
  AND
- If **CB1 CS1 SlipCtrl** setting is Enabled, the measured slip frequency between the line VT and Bus1 VT is less than the **CB1 CS1 SlipFreq** setting.

For signal **CB1 CS2 OK** DDB (884) to be set, the following conditions are necessary:

- Settings **Sys Checks CB1** and **CB1 CS2 Status** must **both** be Enabled;
  AND
- **Live Line** and **Live Bus 1** signals are both set;
  AND
- None of the selected **CB1 CS1 Volt. Blk** conditions (V<, V>, VDiff) are true;
  AND
- If **CB1 CS2 SlipCtrl** setting is Enabled, the measured slip frequency between the line VT and Bus1 VTs is less than the **CB1 CS2 SlipFreq** setting;
  AND
- The measured phase angle magnitude is decreasing;
  AND
- If the **CB1 CS2 Adaptive** setting is Disabled, the measured phase angle magnitude is less than the **CB1 CS2 Angle** setting;
  OR
  If the **CB1 CS2 Adaptive** setting is Enabled, AND if the predicted phase angle when CB1 closes (after **CB1 Cl Time** setting) is less than the **CB1 CS2 Angle** setting AND as close as possible to zero AND still decreasing in magnitude.

For **CB2 CS1 OK** DDB (1577) to be set, the following conditions are necessary:

- Settings **Sys Checks CB2** and **CB2 CS1 Status** must **both** be Enabled;
  AND
- **Live Line** and **Live Bus 2** signals are both set;
  AND
- None of the selected **CB2 CS1 Volt. Blk** conditions (V<, V>, VDiff) are true;
  AND
- The measured phase angle magnitude is less than the **CB2 CS1 Angle** setting;
  AND
- If **CB2 CS1 SlipCtrl** setting is Enabled, the measured slip frequency between the line VT and Bus1 VT is less than the **CB2 CS1 SlipFreq** setting.

For signal **CB2 CS2 OK** DDB (1463) to be set, the following conditions are necessary:

- Settings **Sys Checks CB2** and **CB2 CS2 Status** must **both** be Enabled;
  AND

- **Live Line** and **Live Bus 2** signals are both set;
  AND
- None of the selected **CB2 CS1 Volt. Blk** conditions (V<, V>, VDiff) are true;
  AND
- If **CB2 CS2 SlipCtrl** setting is Enabled, the measured slip frequency between the line VT and Bus1 VTs is less than the **CB2 CS2 SlipFreq**setting;
  AND
- The measured phase angle magnitude is decreasing;
  AND
- If the **CB2 CS2 Adaptive** setting is Disabled, the measured phase angle magnitude is less than the **CB2 CS2 Angle** setting;
  OR
  If the **CB2 CS2 Adaptive** setting is Enabled, AND if the predicted phase angle when CB2 closes (after **CB2 CI Time** setting) is less than the **CB2 CS2 Angle** setting AND as close as possible to zero AND still decreasing in magnitude.

6. P544/P546 CIRCUIT BREAKER CONTROL AND AUTO-RECLOSE FIGURES (AR FIGURES)

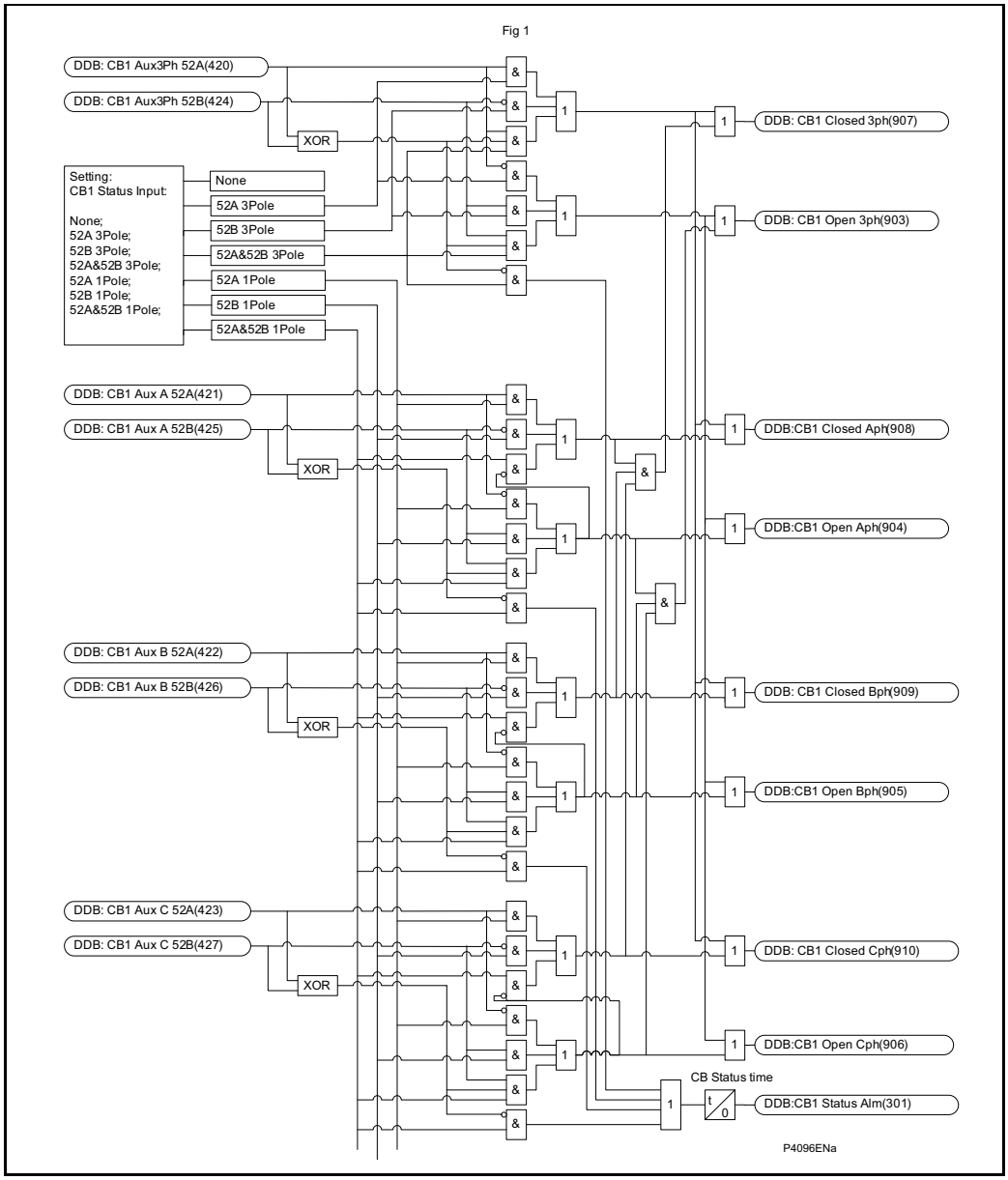

Figure 1 Circuit breaker 1 - state monitor

OP

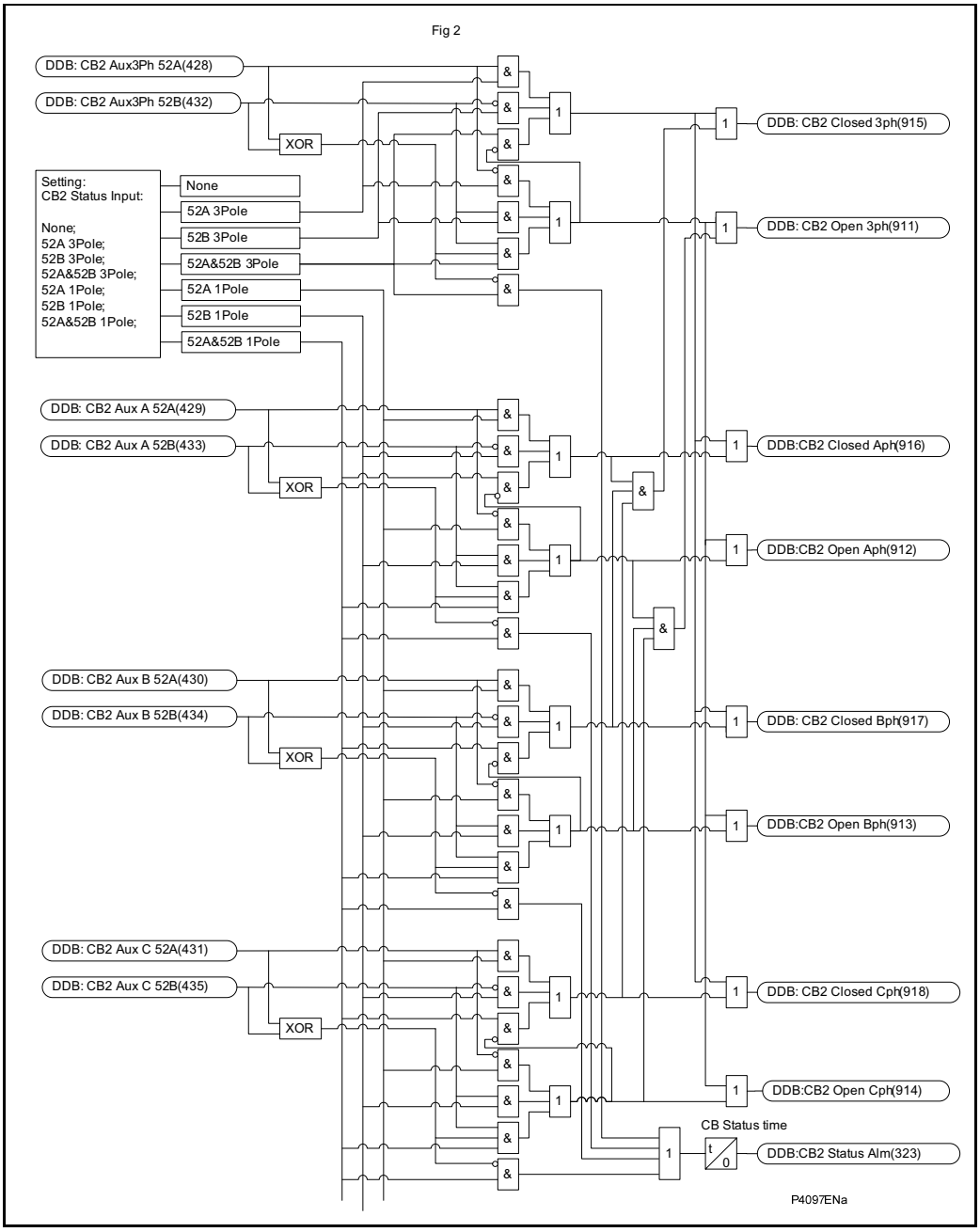

Figure 2 Circuit breaker 2 - state monitor

OP

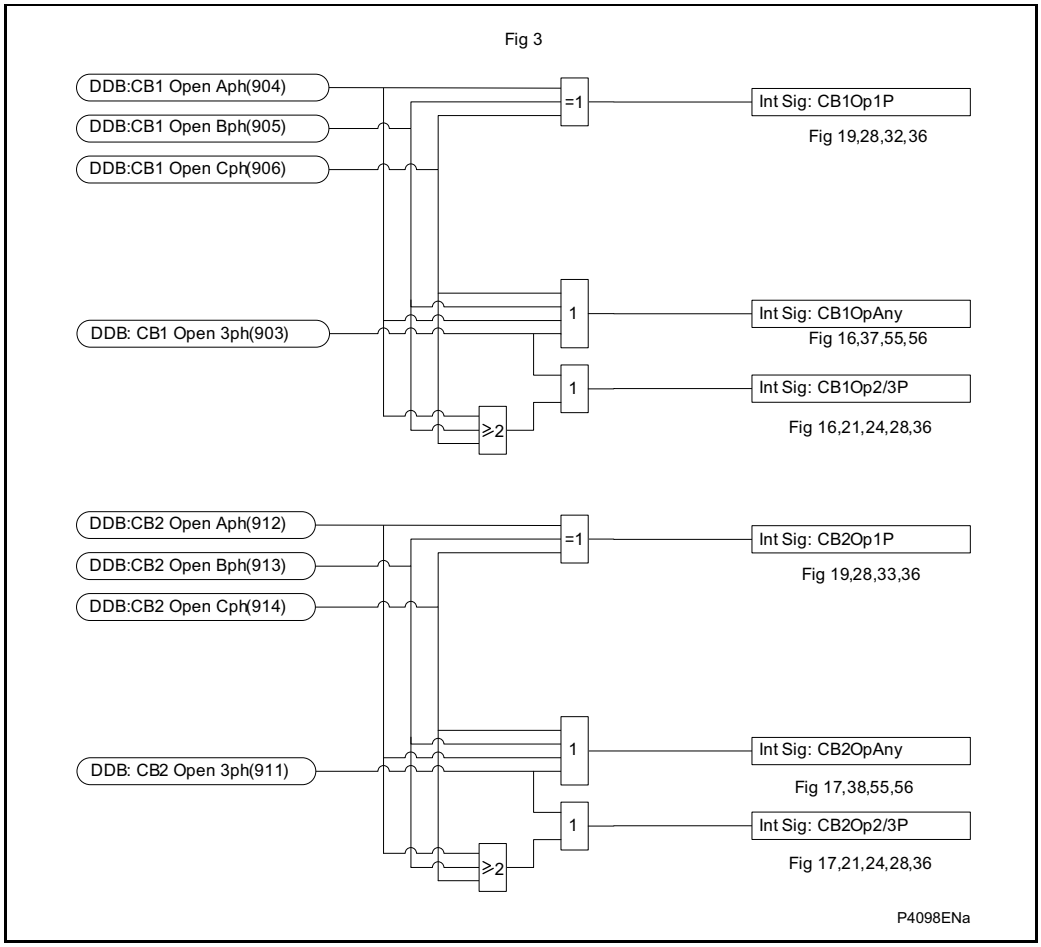

Figure 3 CB1 & CB2 Open 1P, 2P, 2/3P, Any

OP

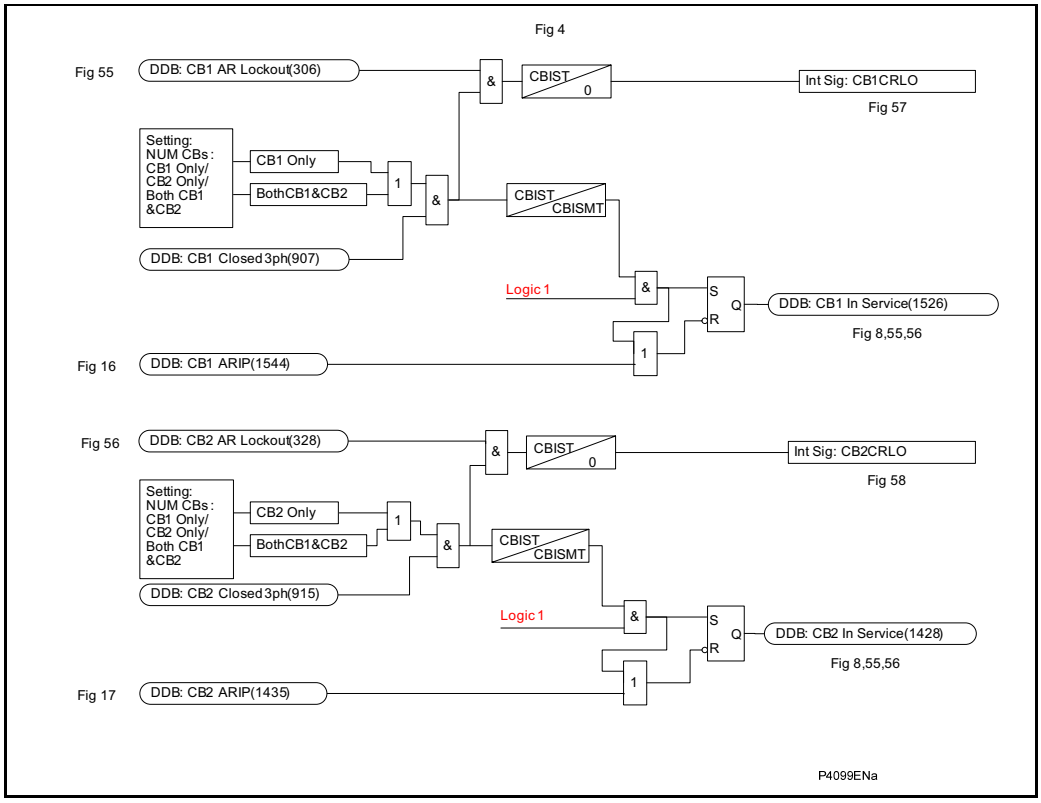

Figure 4 Circuit breaker in service

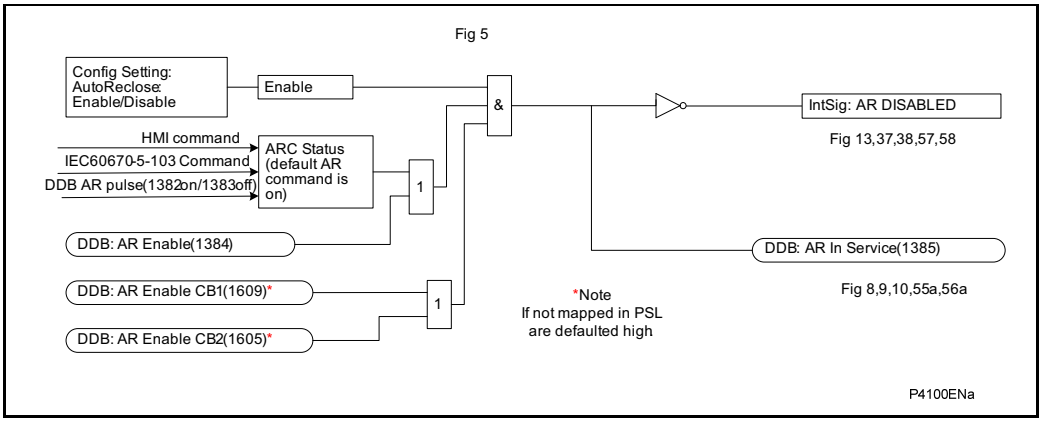

Figure 5 Auto-reclose enable

OP

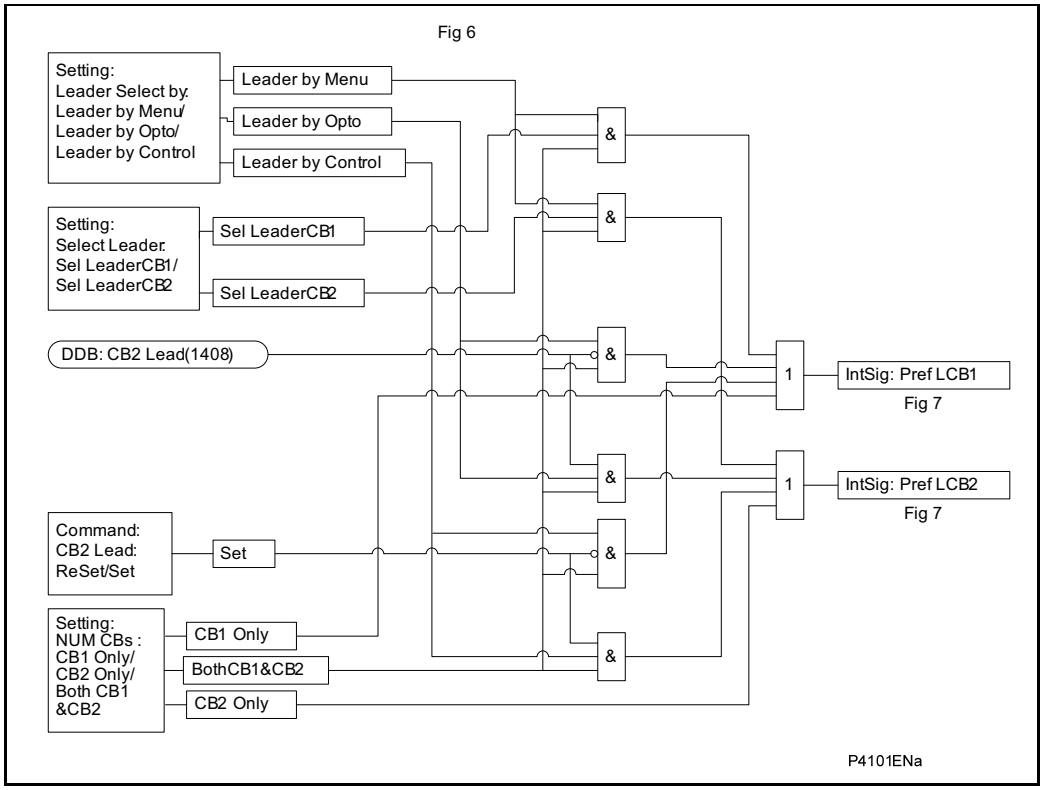

Figure 6 Lead & follower circuit breaker selection

OP

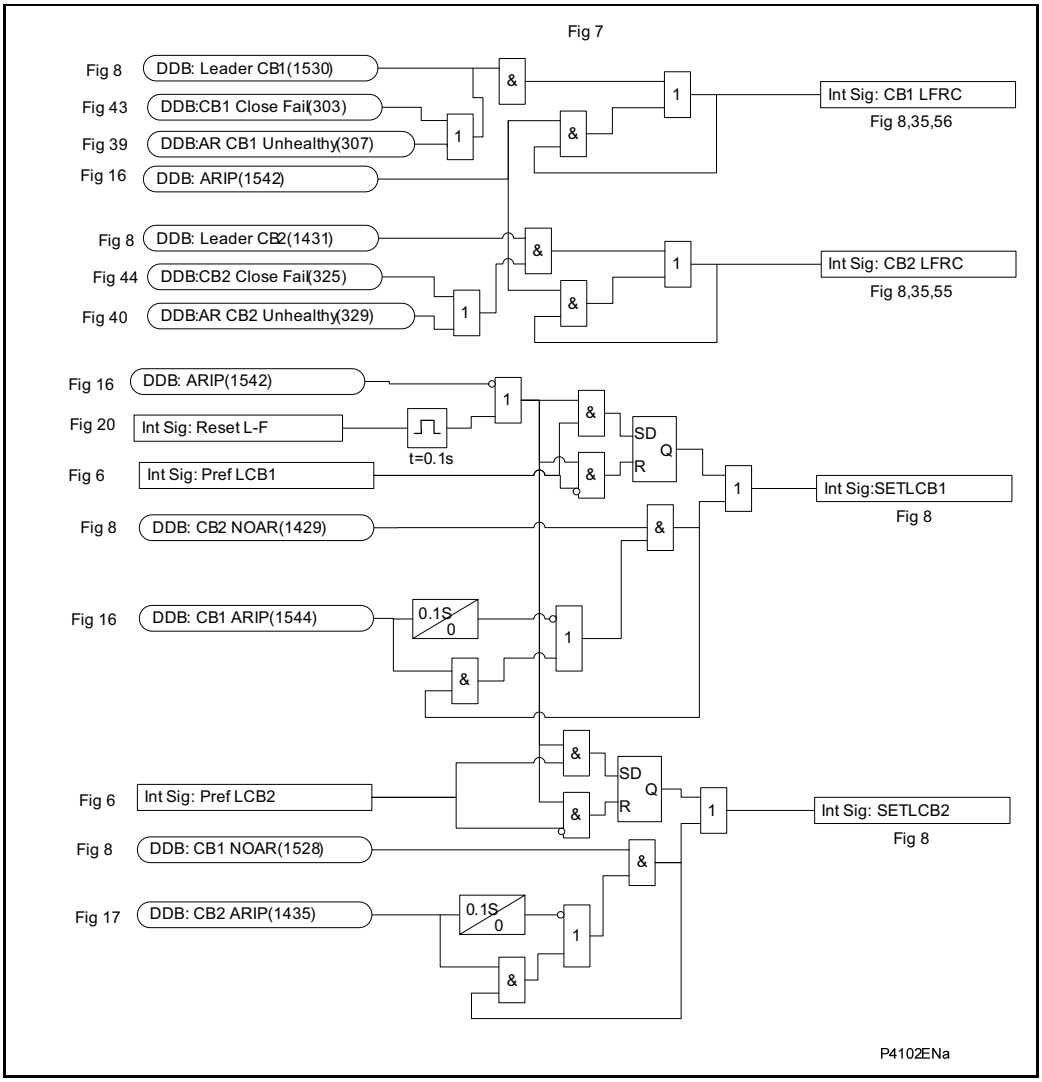

Figure 7 Leader/follower logic – 1

OP

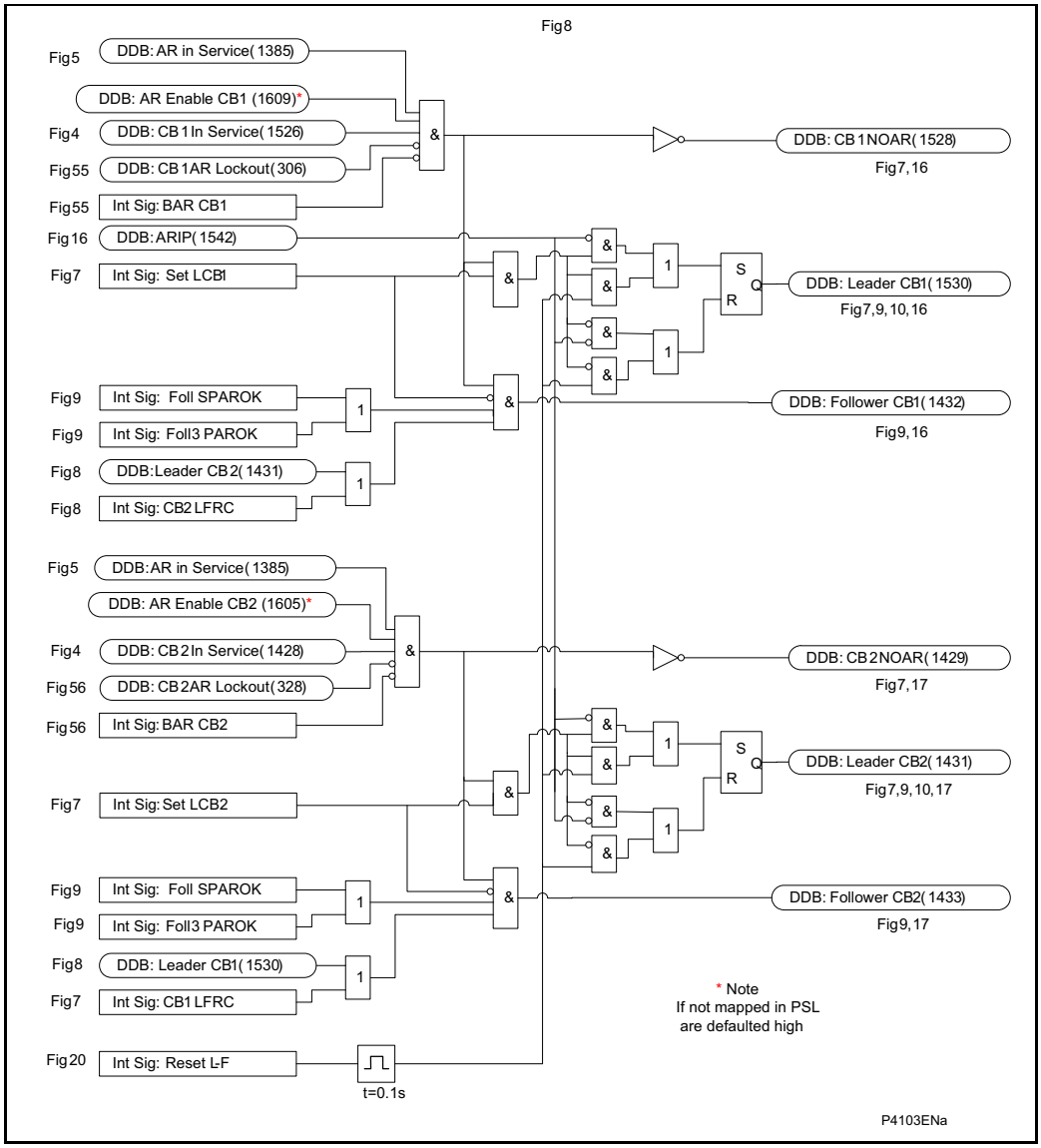

Figure 8 Leader/follower logic – 2

OP

OP

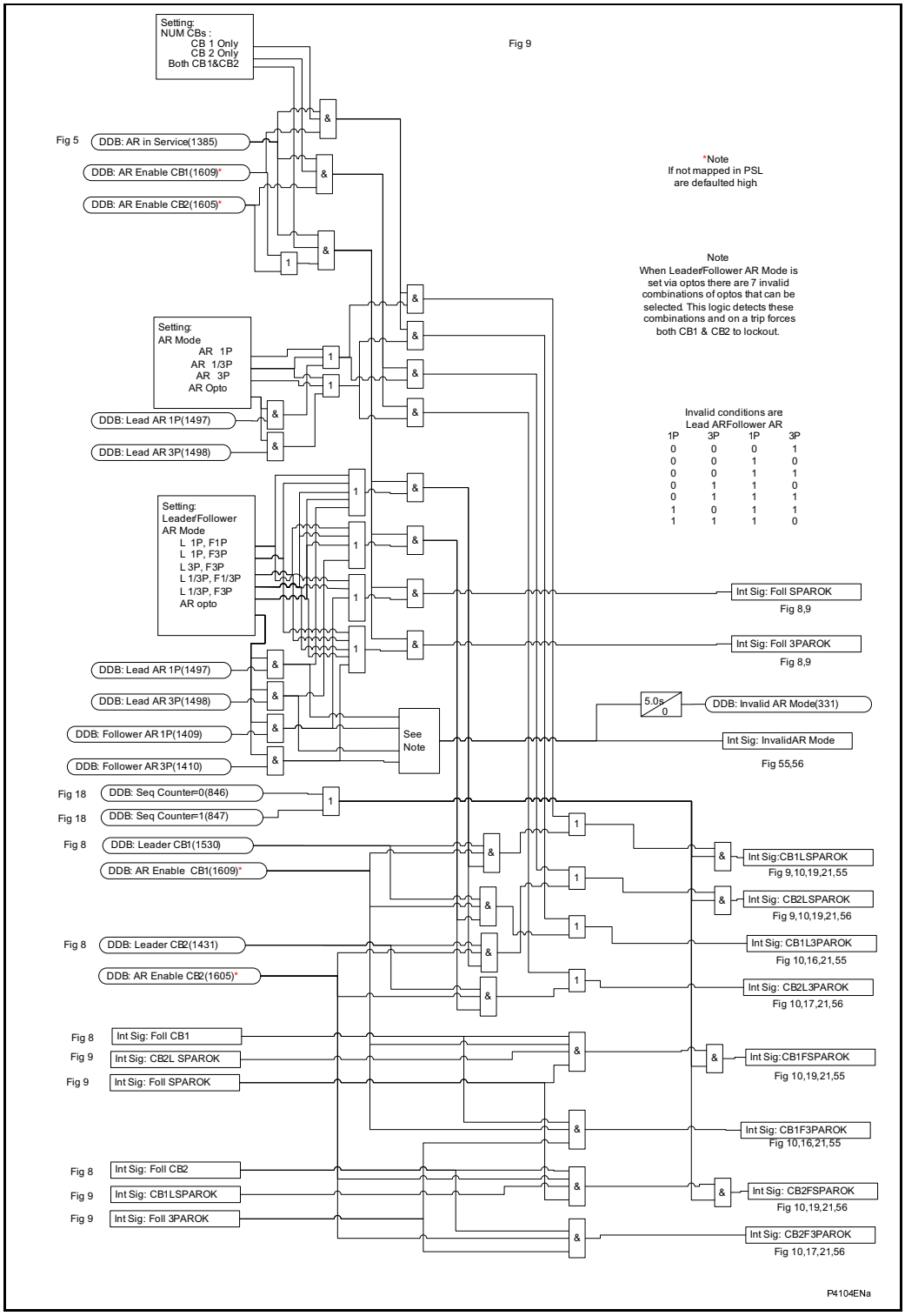

Figure 9 Leader & follower AR modes enable

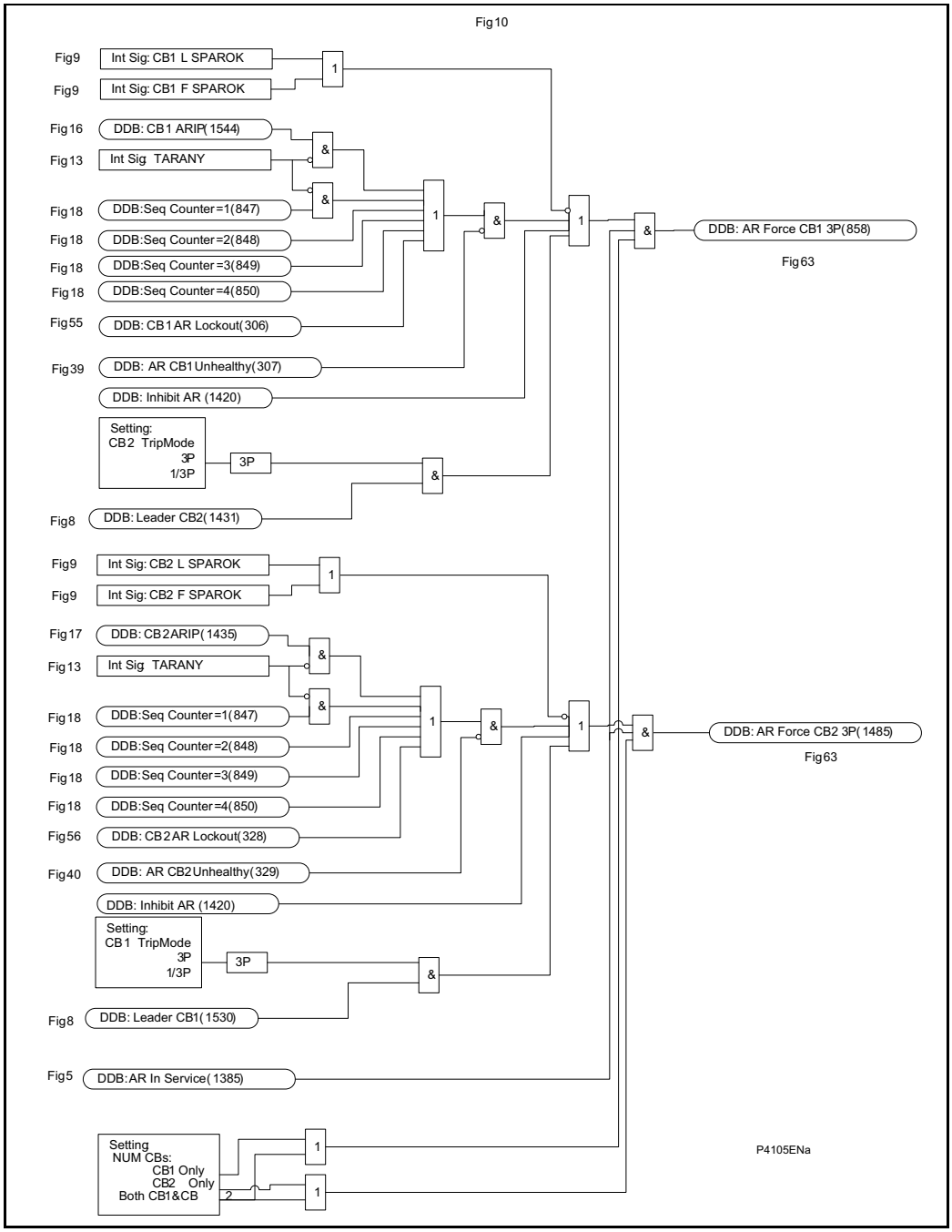

Figure 10 Force three phase trip

OP

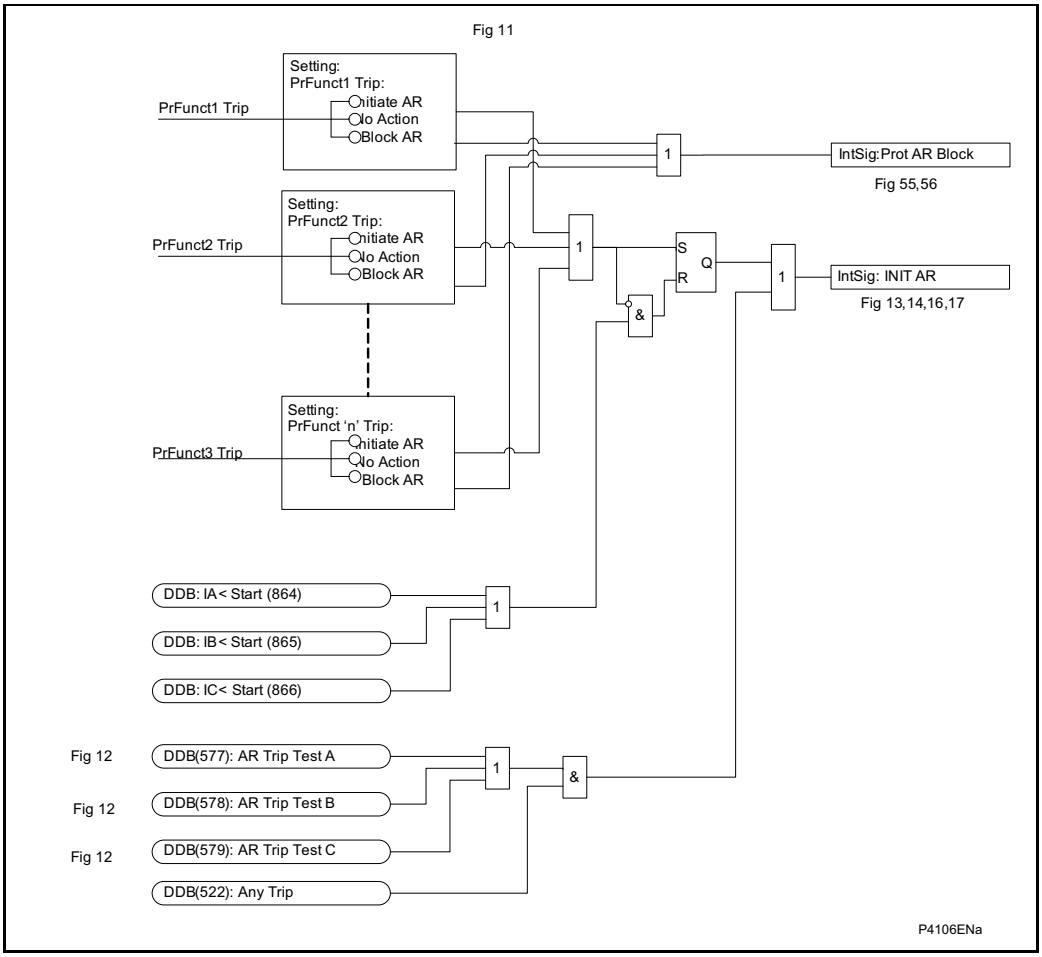

Figure 11 Auto-reclose initiation

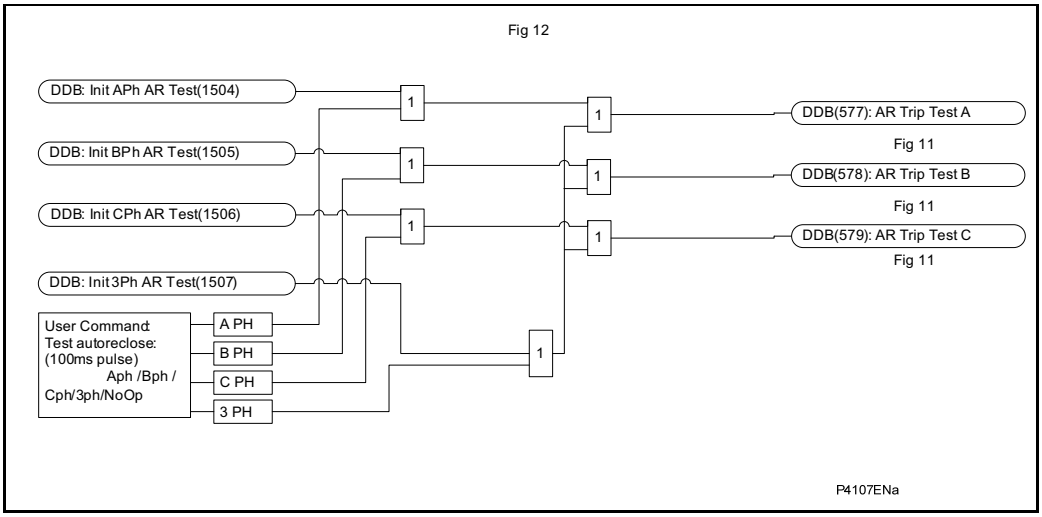

Figure 12 Test trip & AR initiation

OP

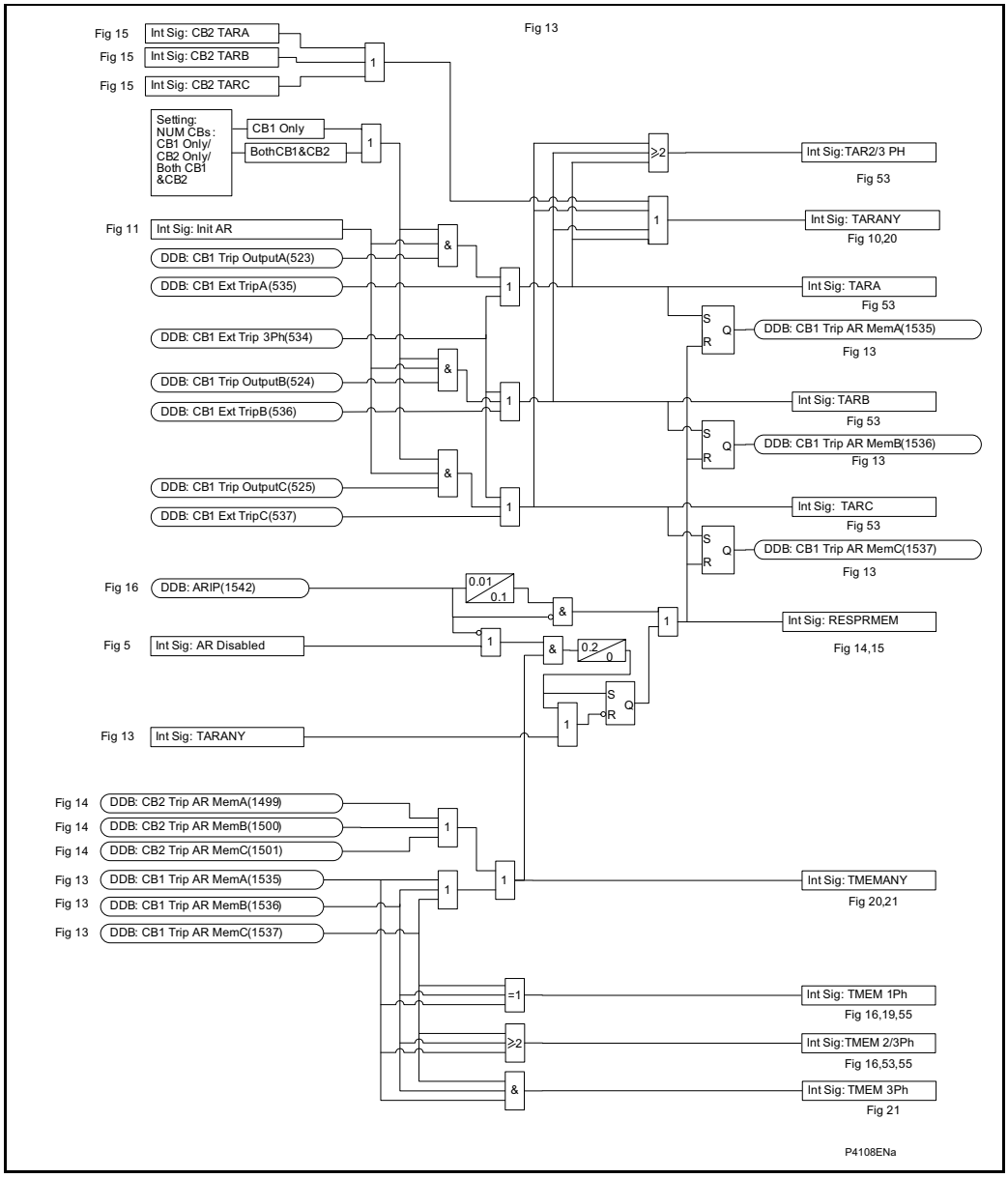

Figure 13 CB1 1pole / 3 pole trip + AR initiation

OP

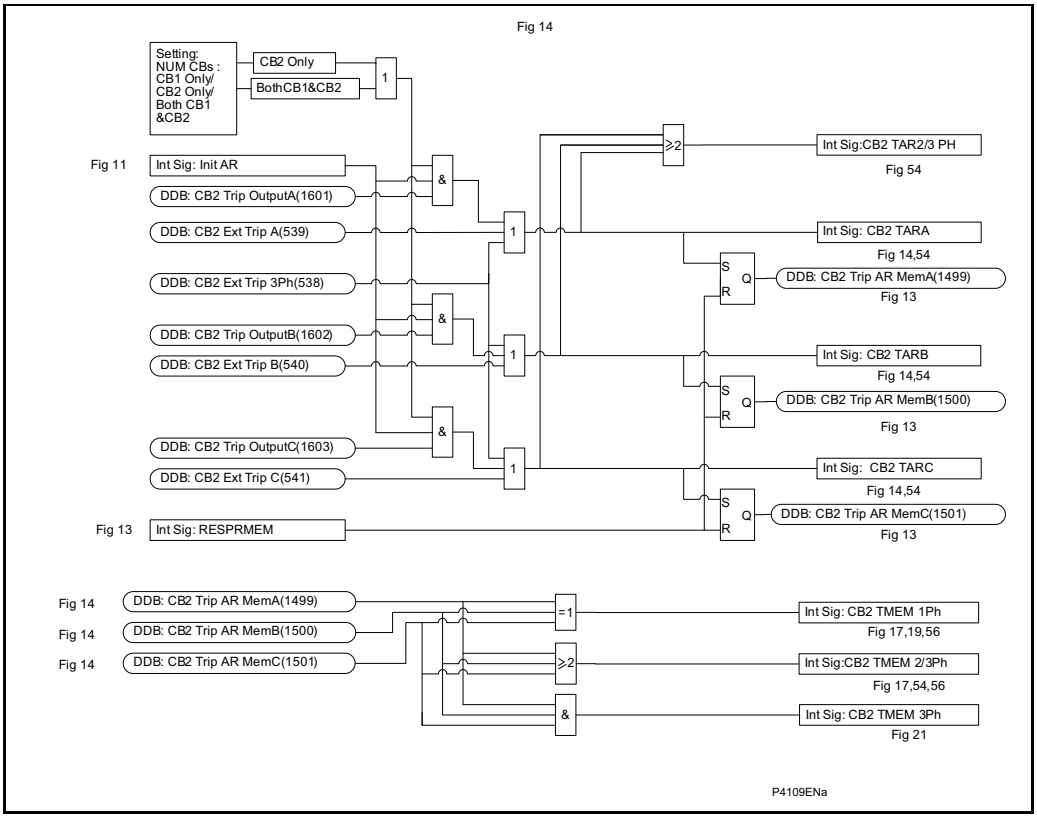

Figure 14 CB2 1 pole / 3 pole trip + AR initiation

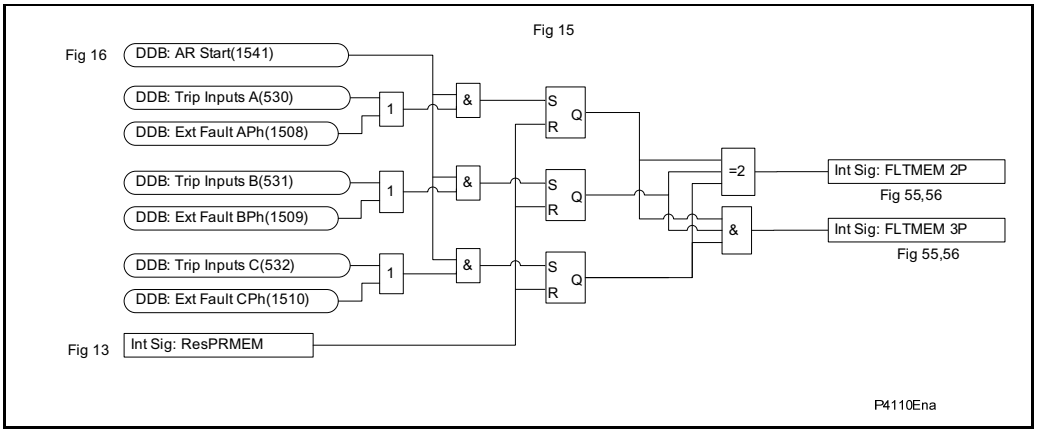

Figure 15 1Ph, 2Ph & 3Ph fault memory

OP

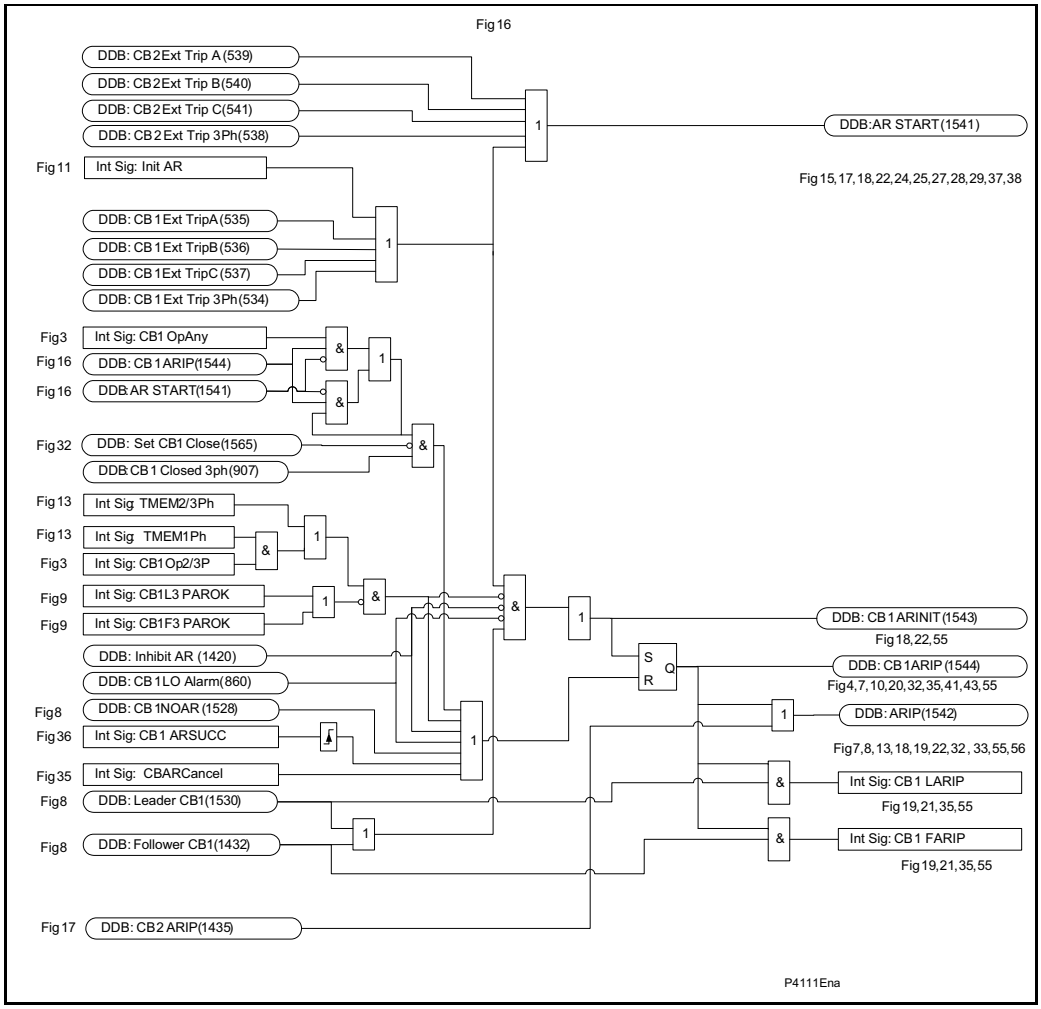

Figure 16 CB1 Auto-reclose in progress

OP

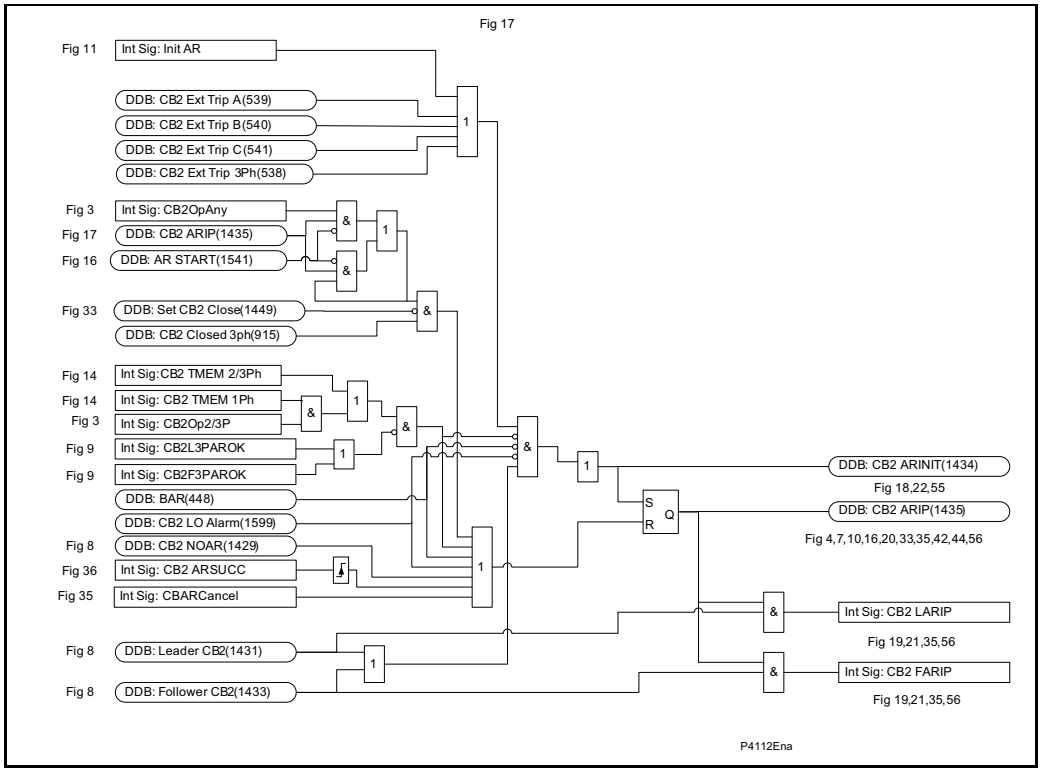

Figure 17 CB2 Auto-reclose in progress

OP

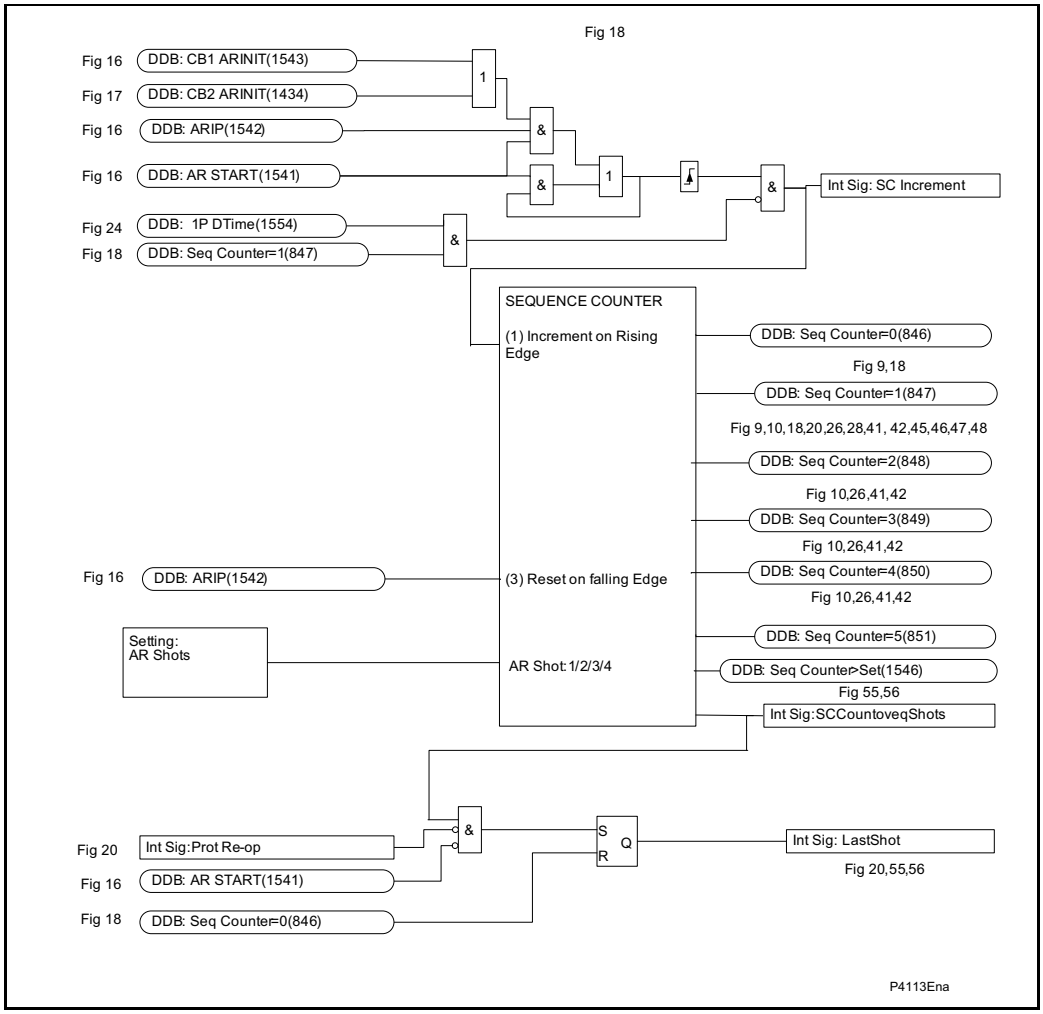

Figure 18 Sequence counter

OP

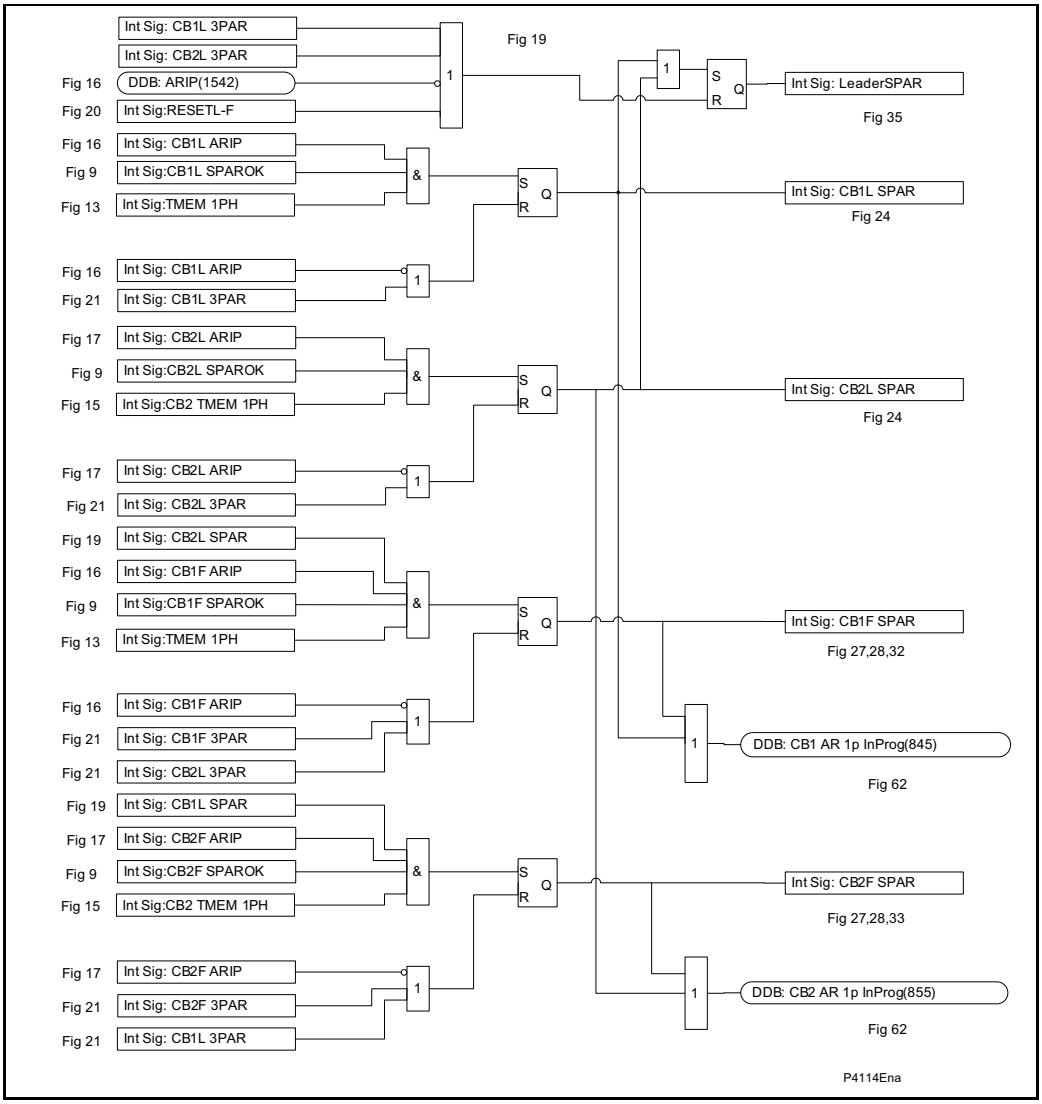

Figure 19 Single phase AR cycle selection

OP

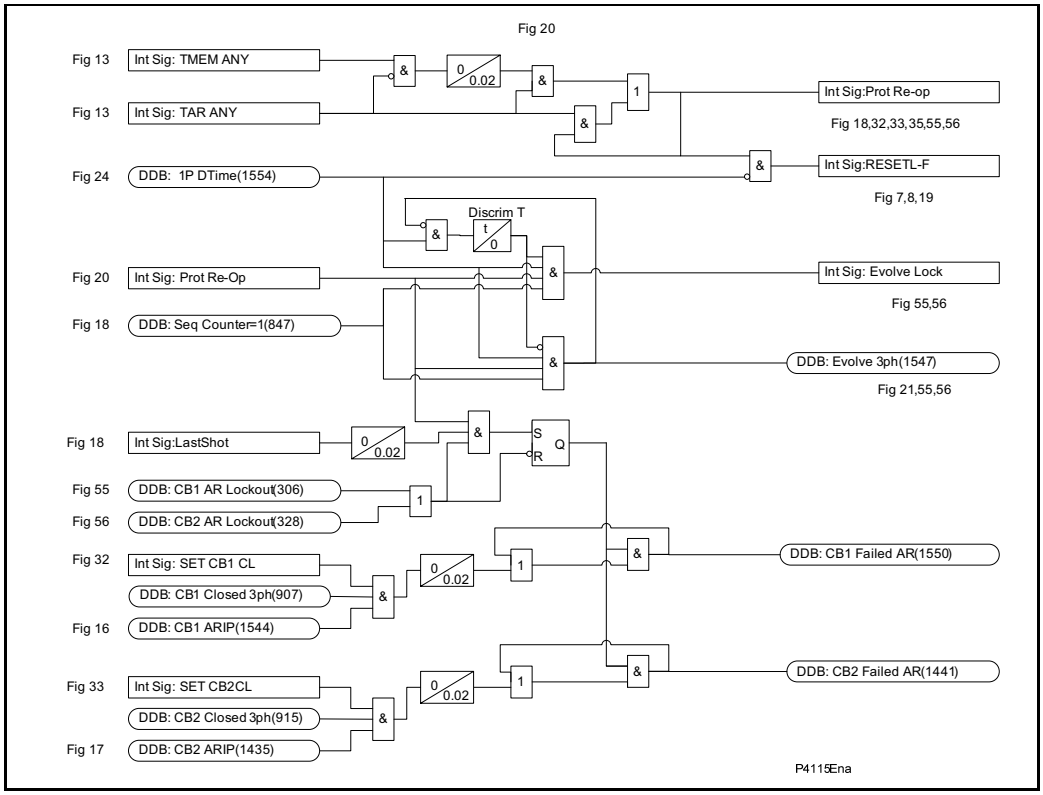

Figure 20 Protection re-operation + evolving fault + persistent fault

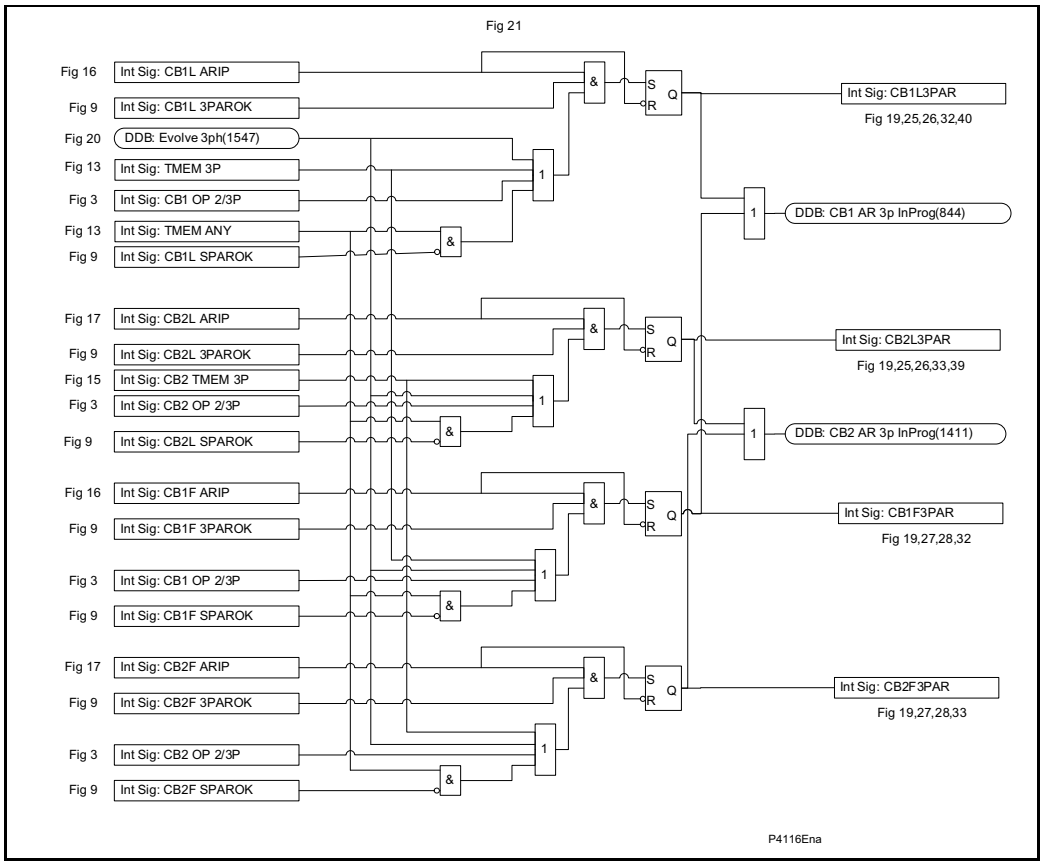

Figure 21 Three phase AR cycle selection

OP

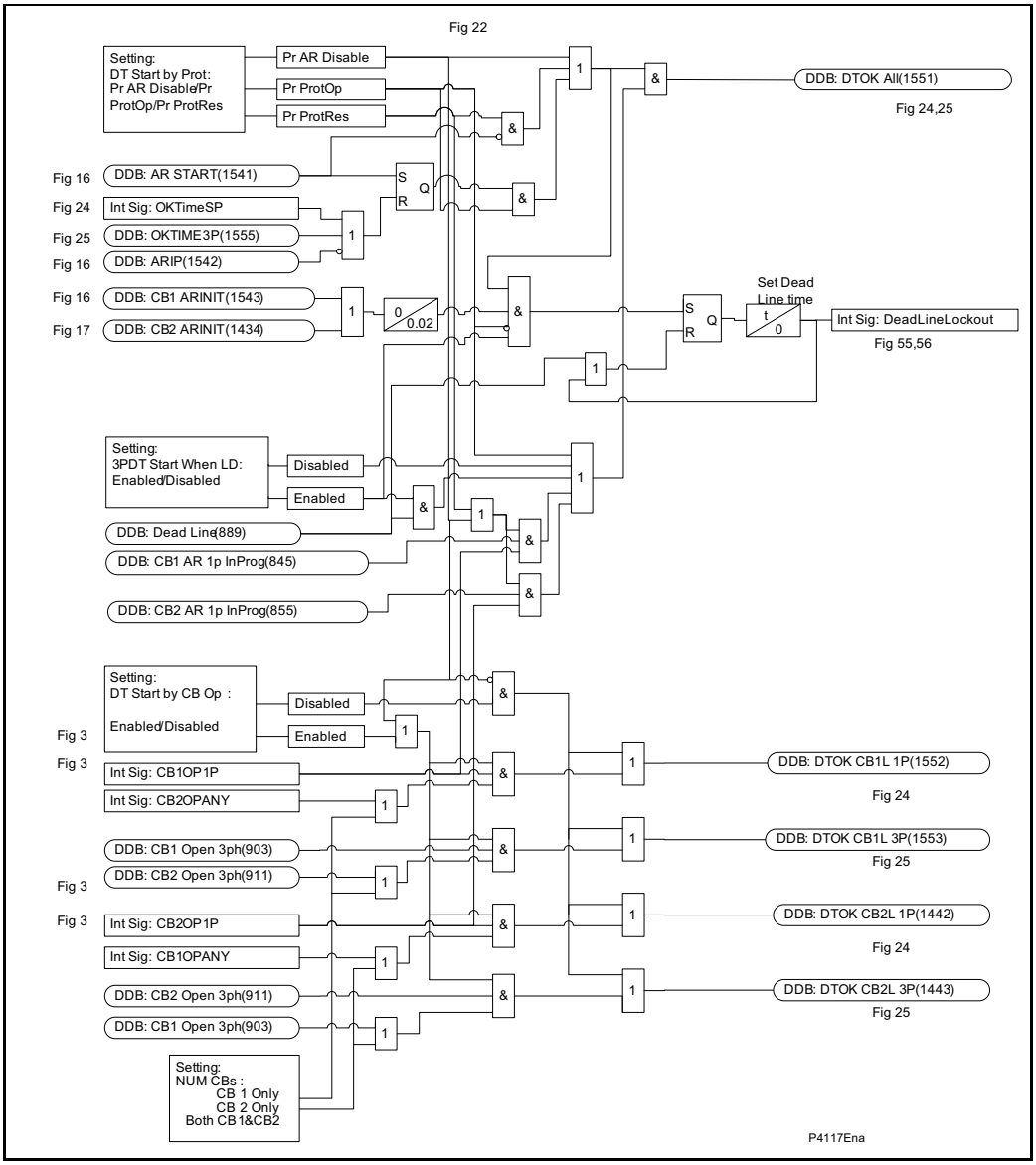

Figure 22 Dead time start enable

OP

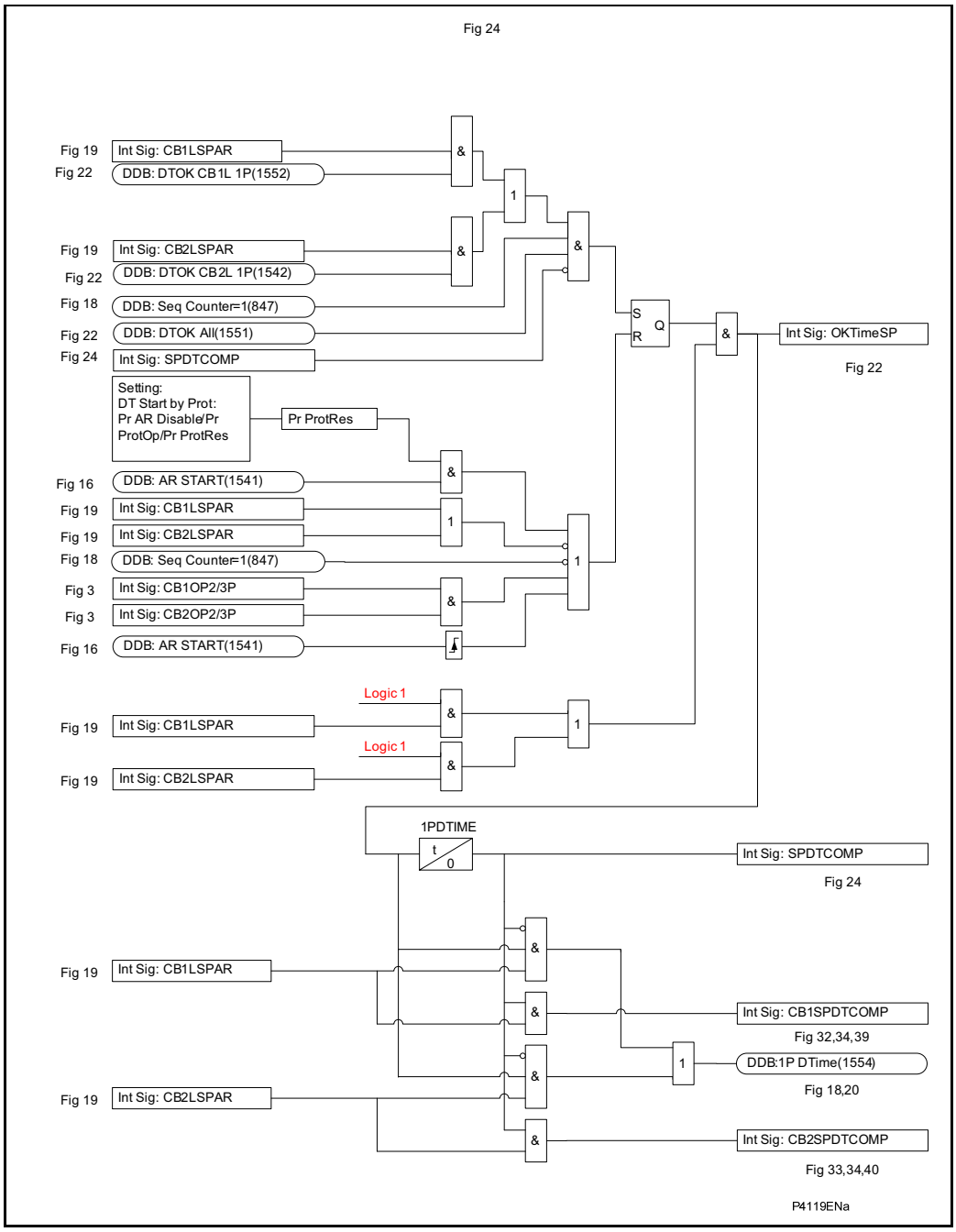

Figure 24 Single phase AR lead CB dead time

OP

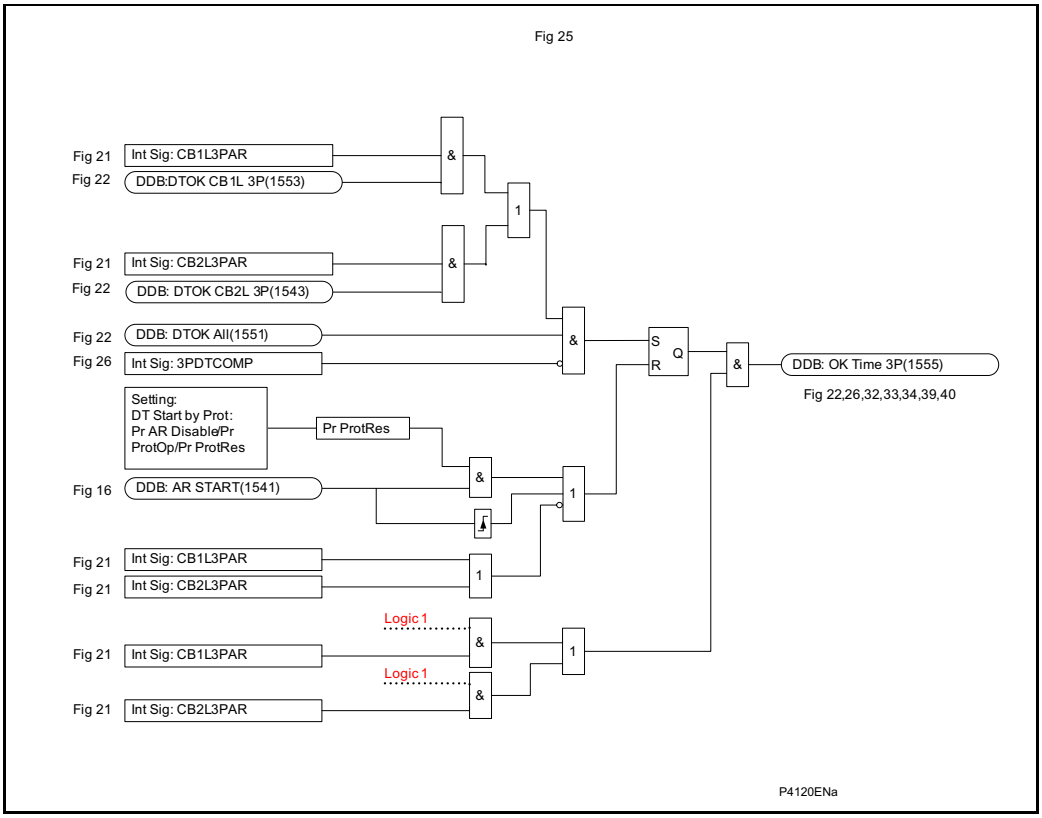

Figure 25 Three phase AR lead CB dead time enable

OP

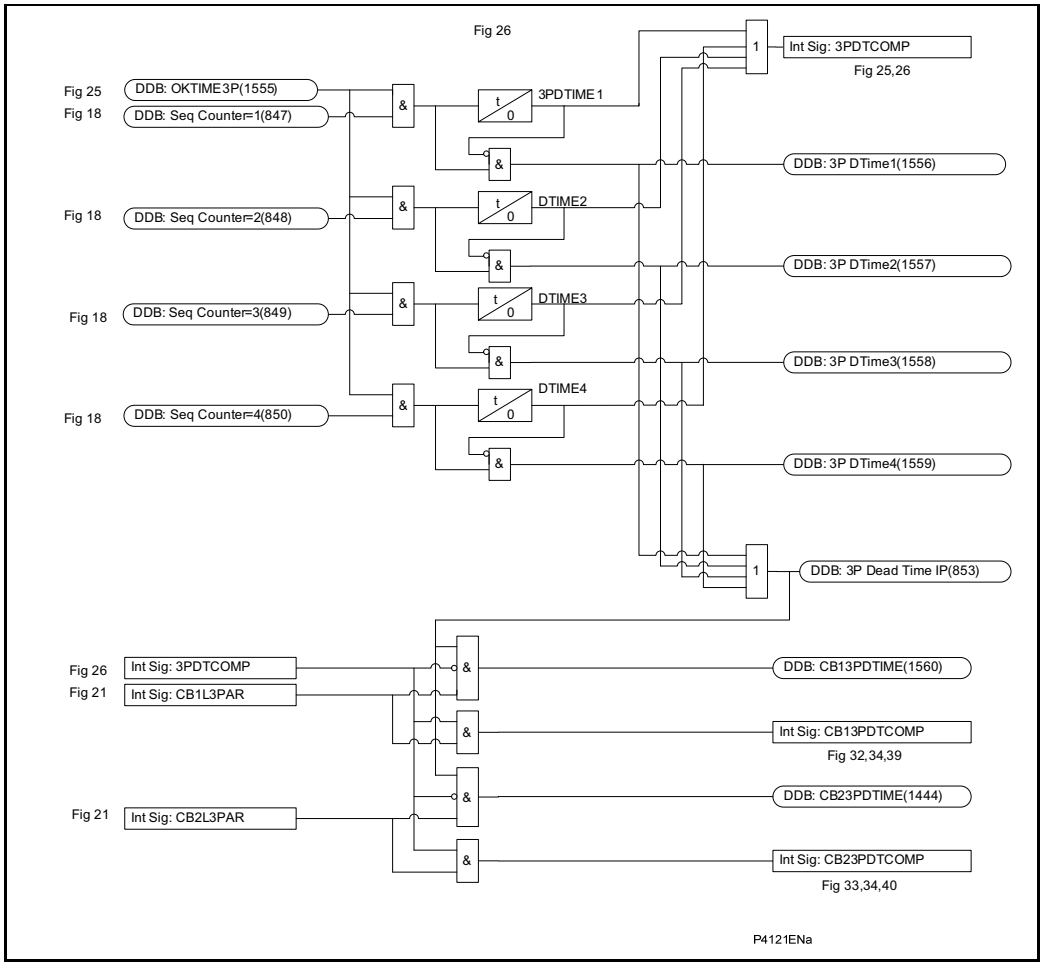

Figure 26 Three phase AR lead CB dead time

OP

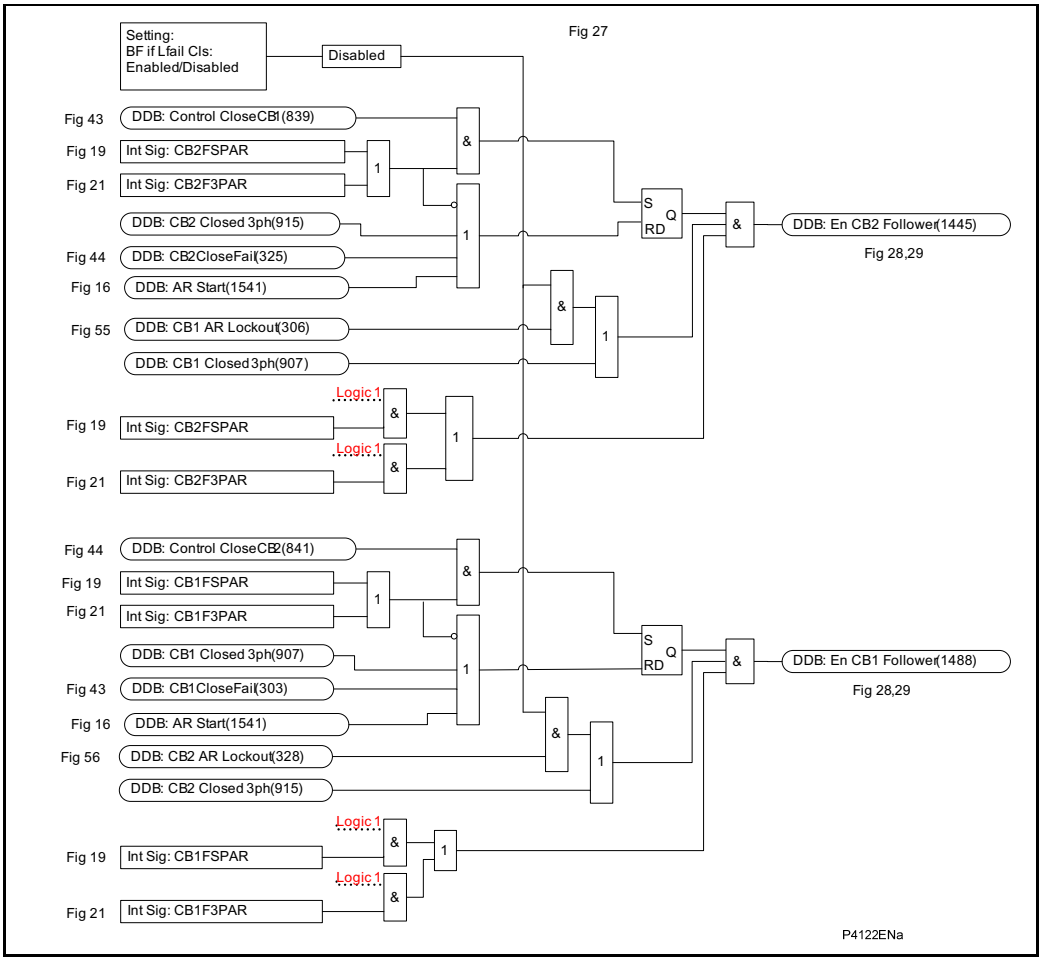

Figure 27 Follower AR enable

OP

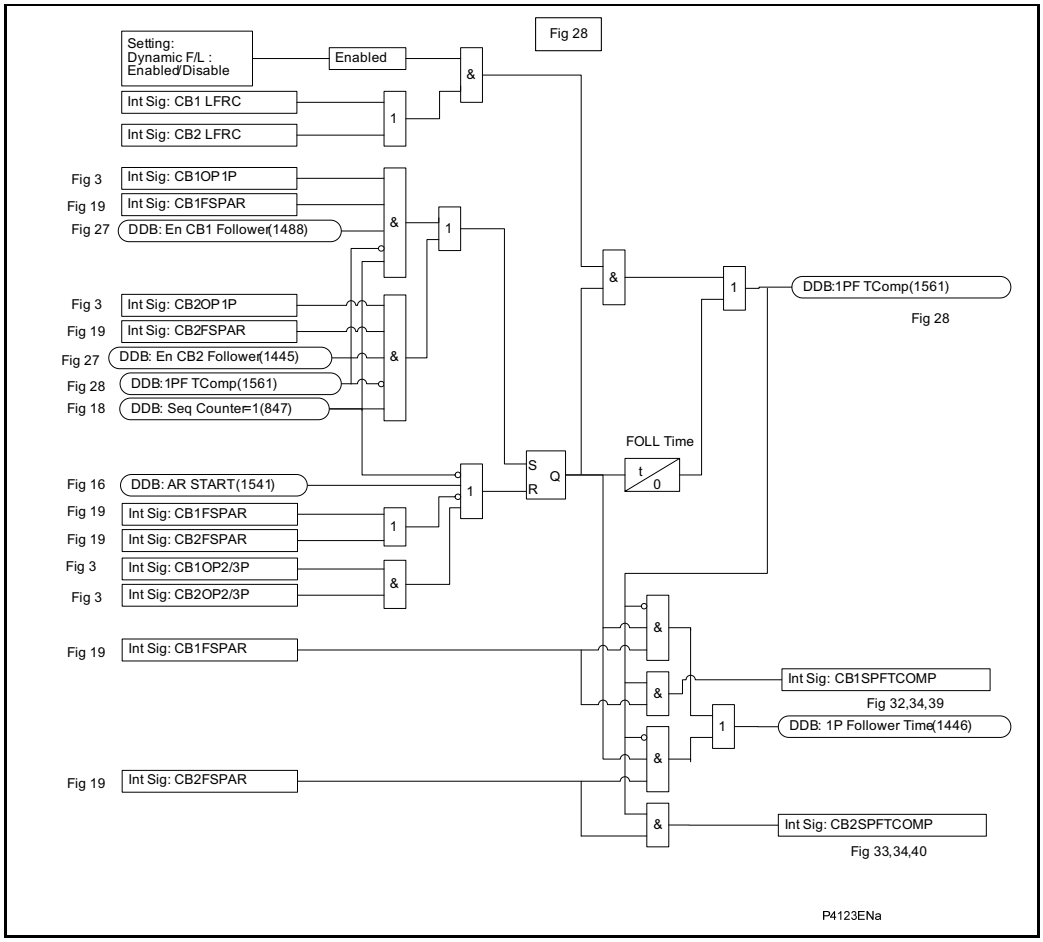

Figure 28 Single phase follower time

OP

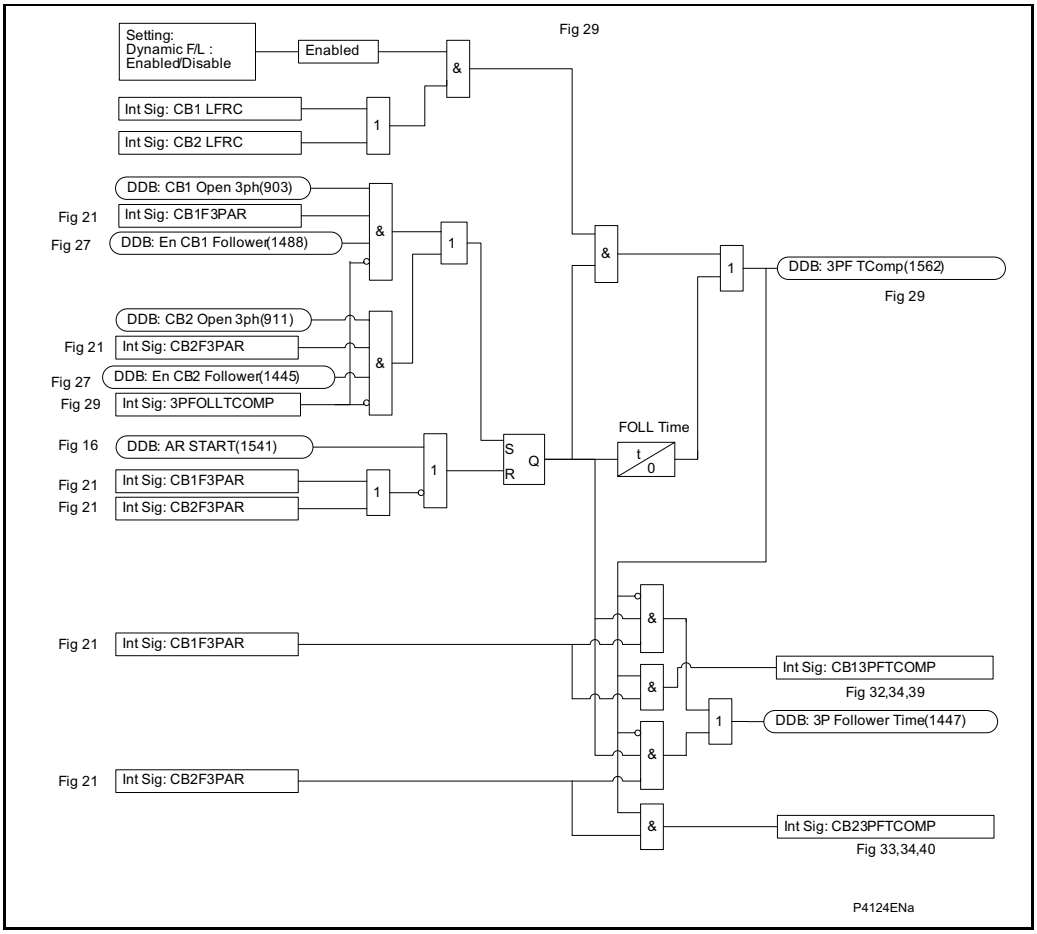

Figure 29 Three phase follower time

OP

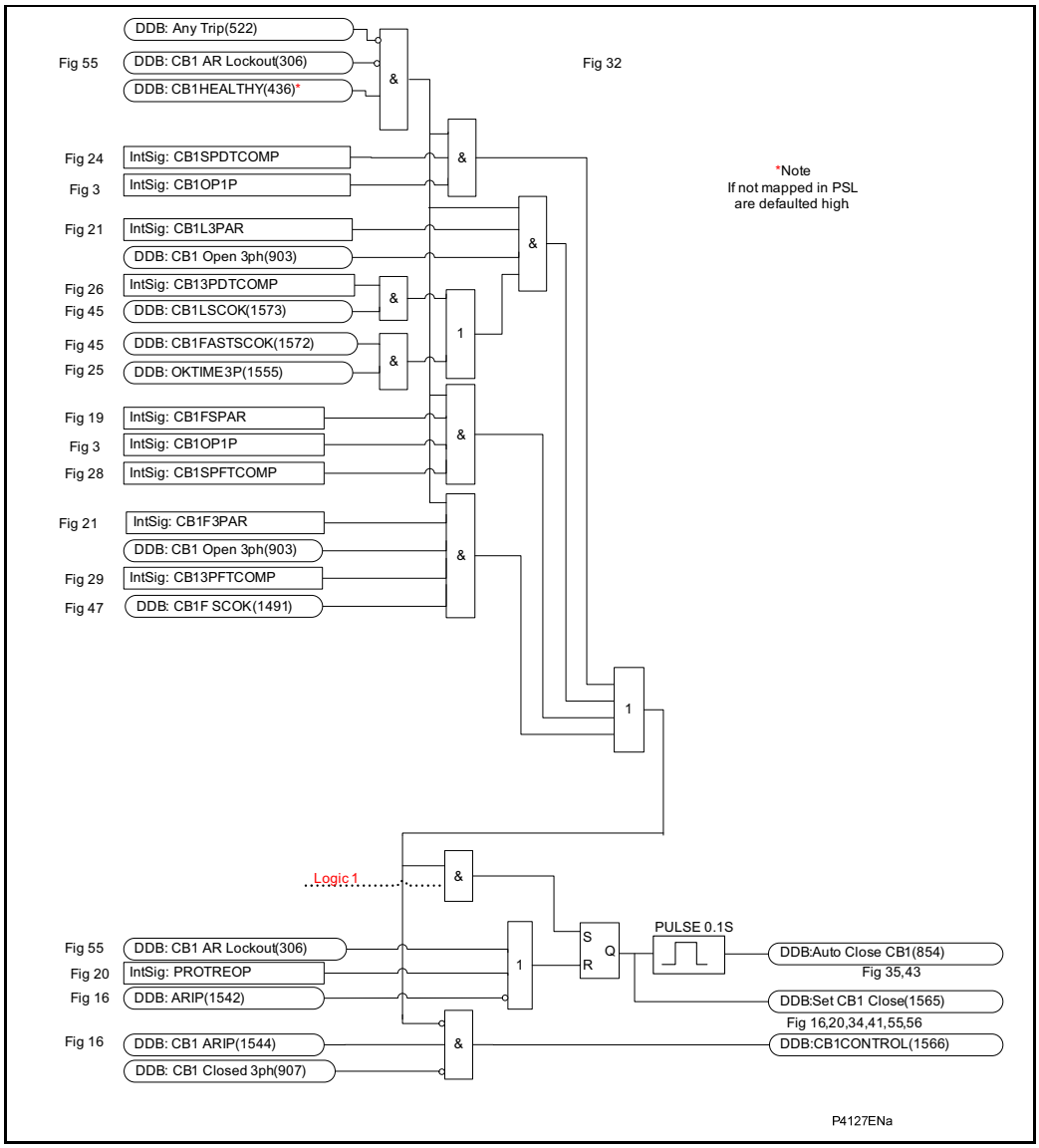

Figure 32 CB Auto close

OP

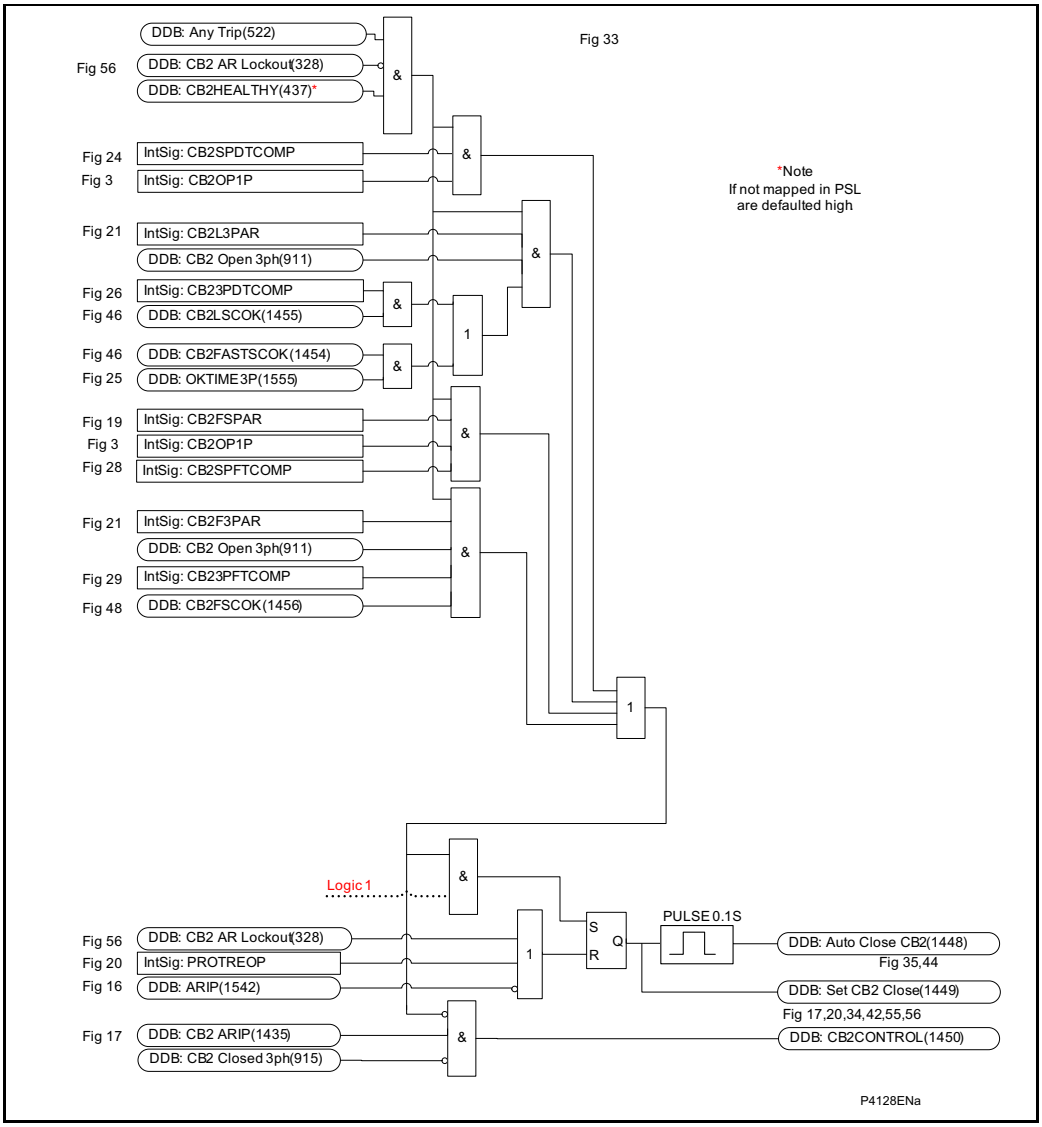

Figure 33 CB2 Auto close

OP

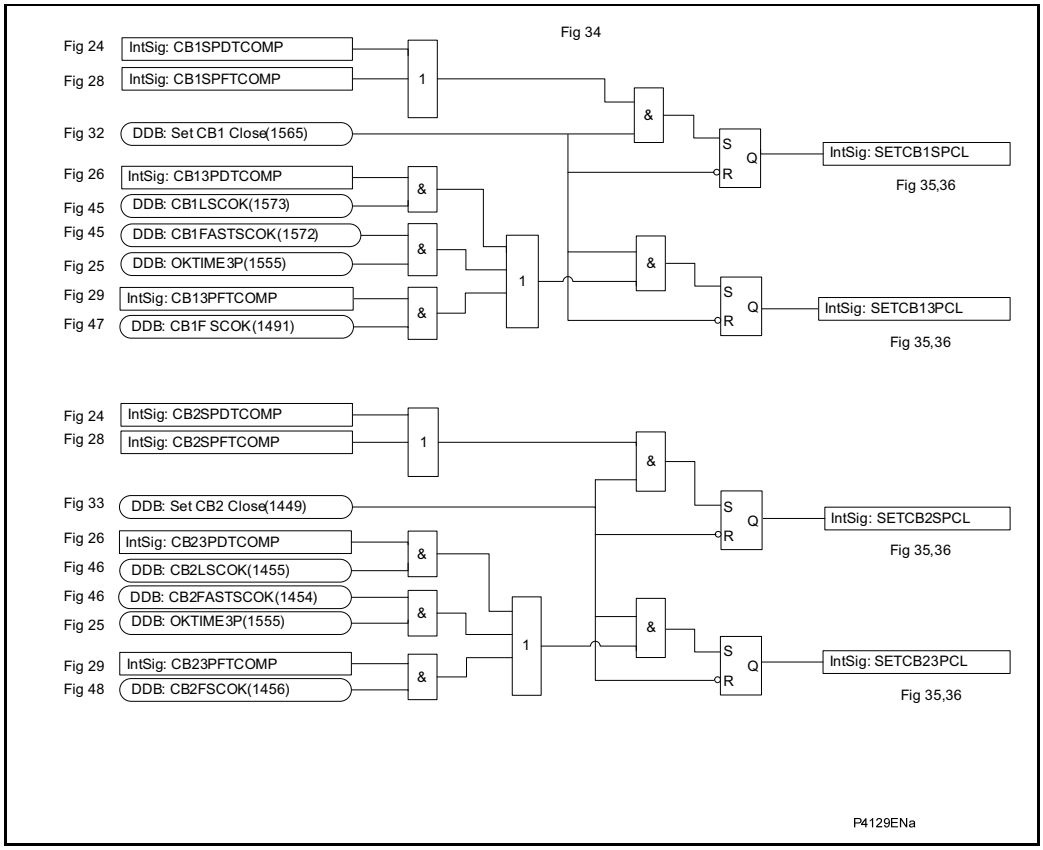

Figure 34 Prepare reclaim initiation

OP

OP

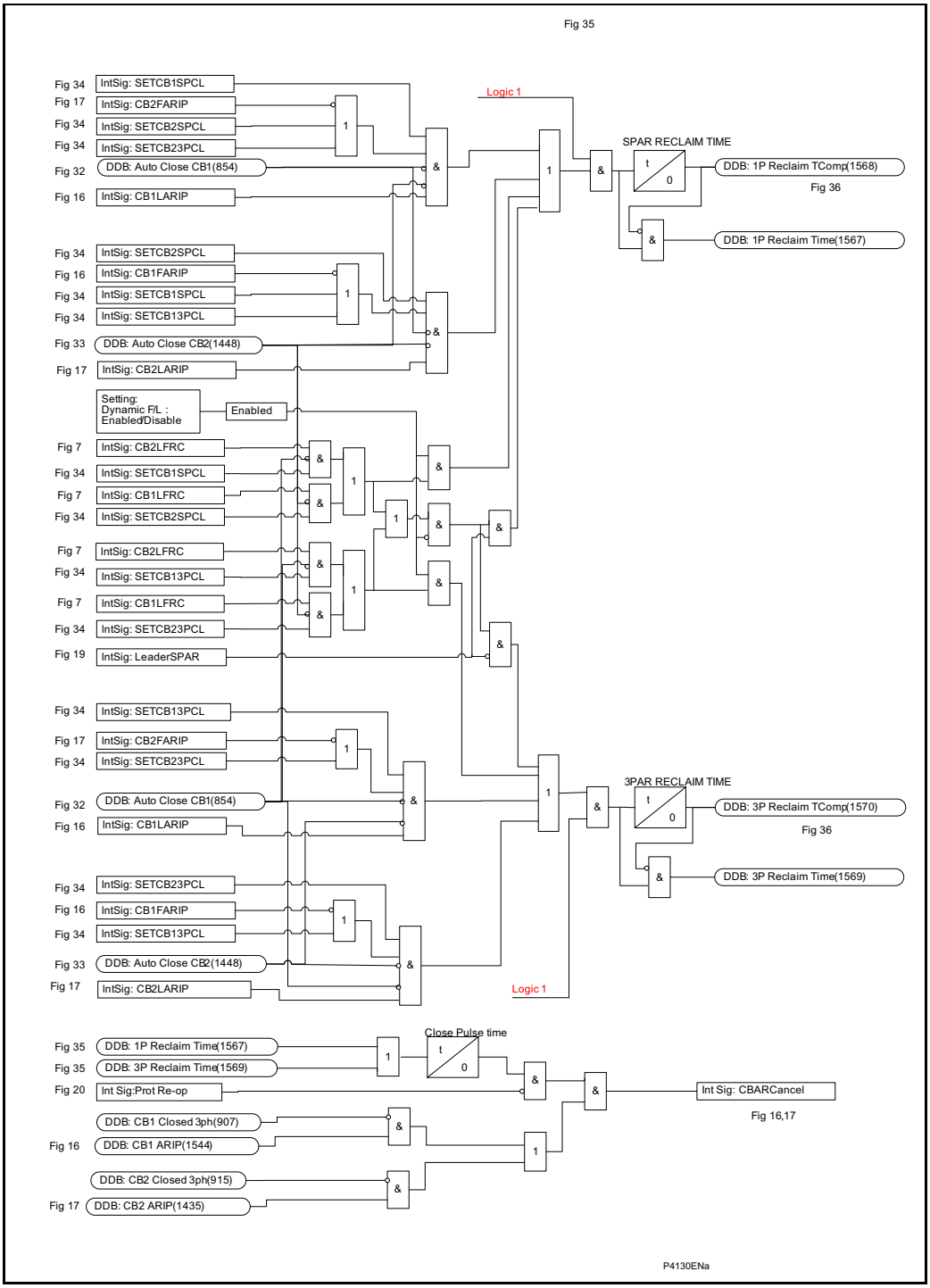

Figure 35 Reclaim time

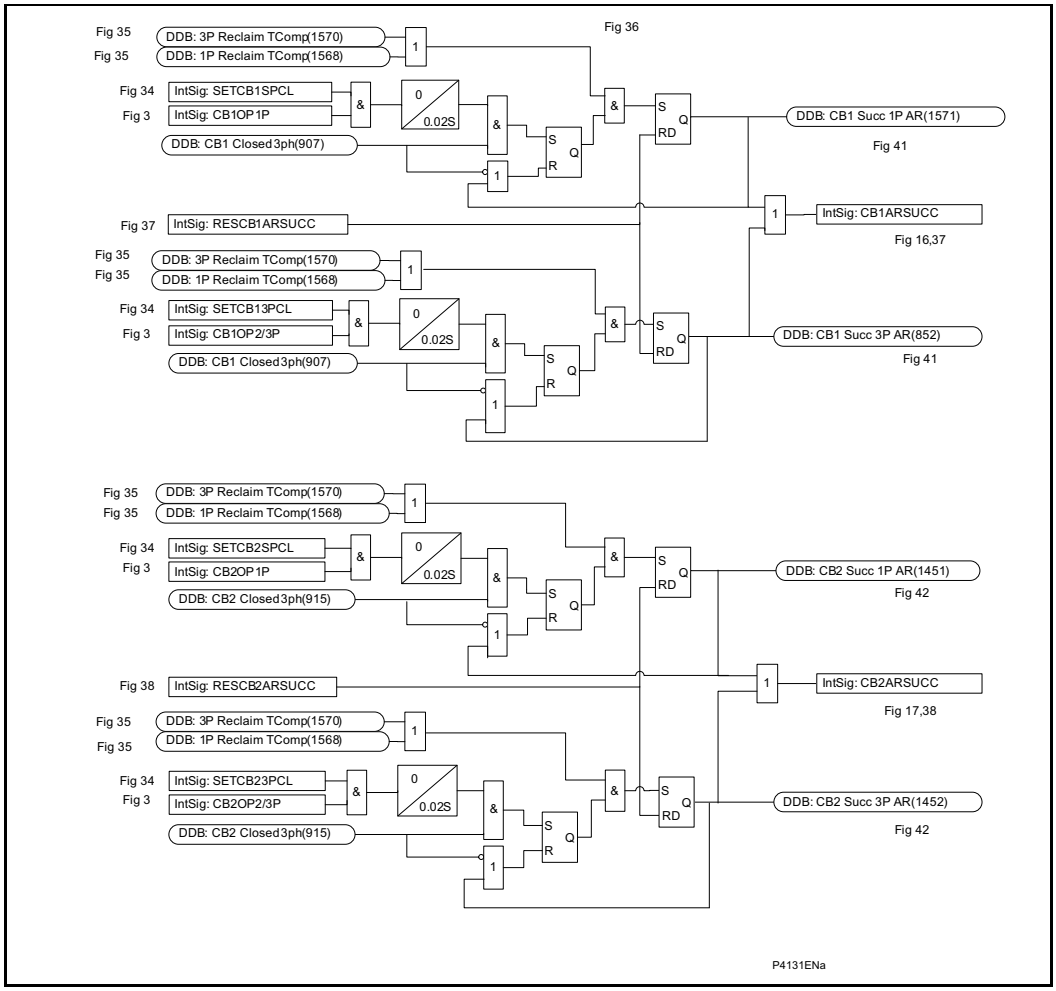

Figure 36 Successful auto-reclose signals

OP

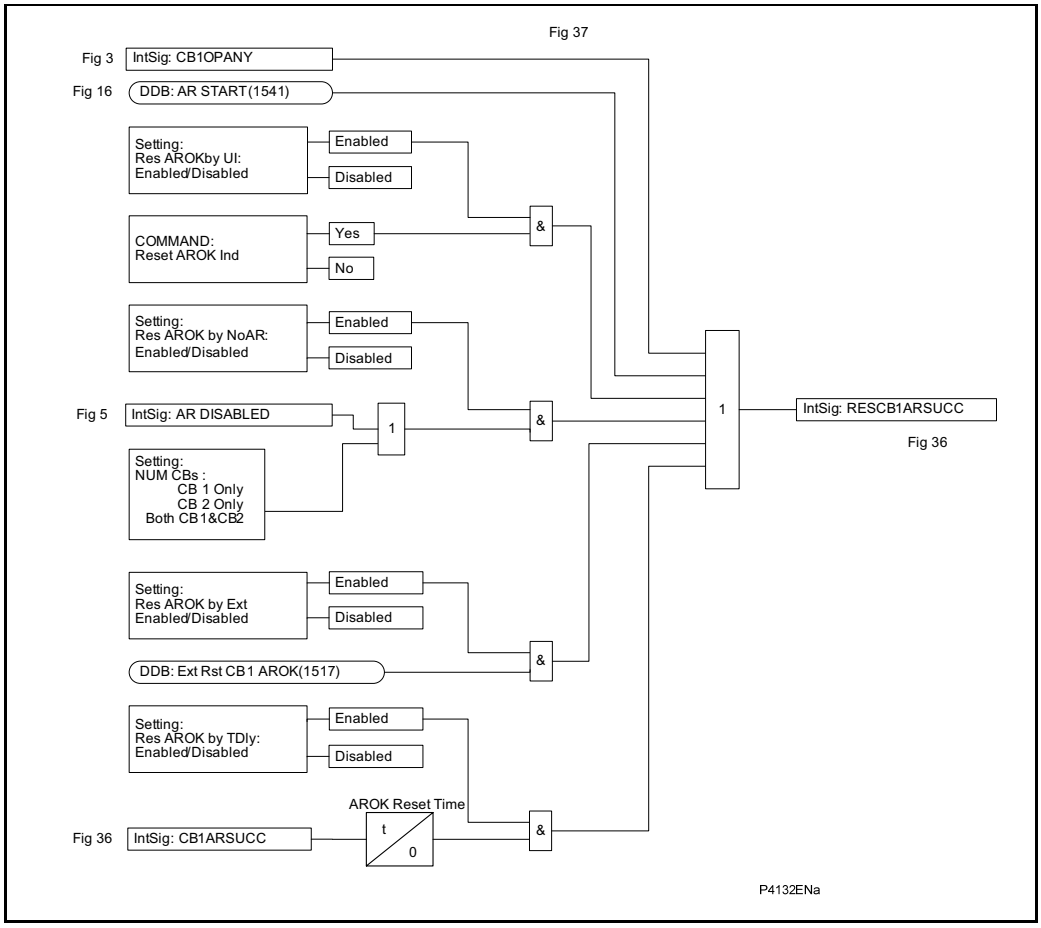

Figure 37 Reset CB1 successful AR indication

OP

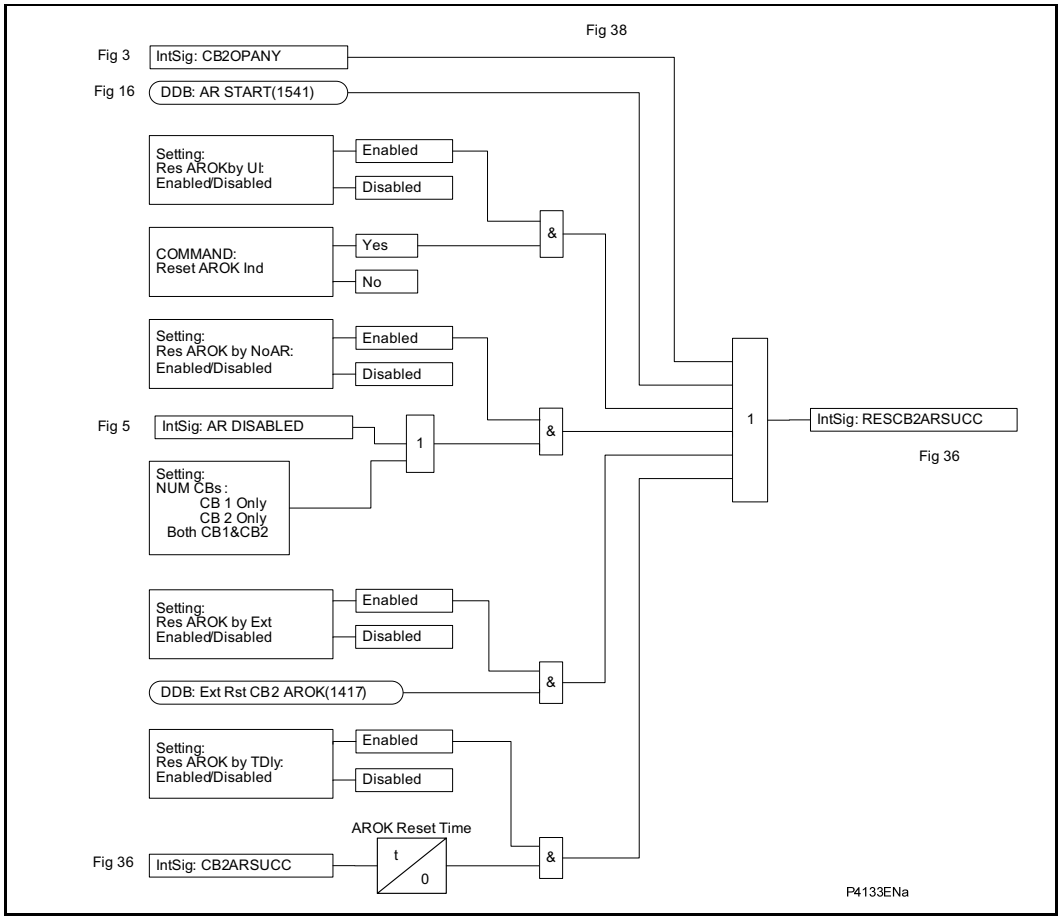

Figure 38 Reset CB2 successful AR indication

OP

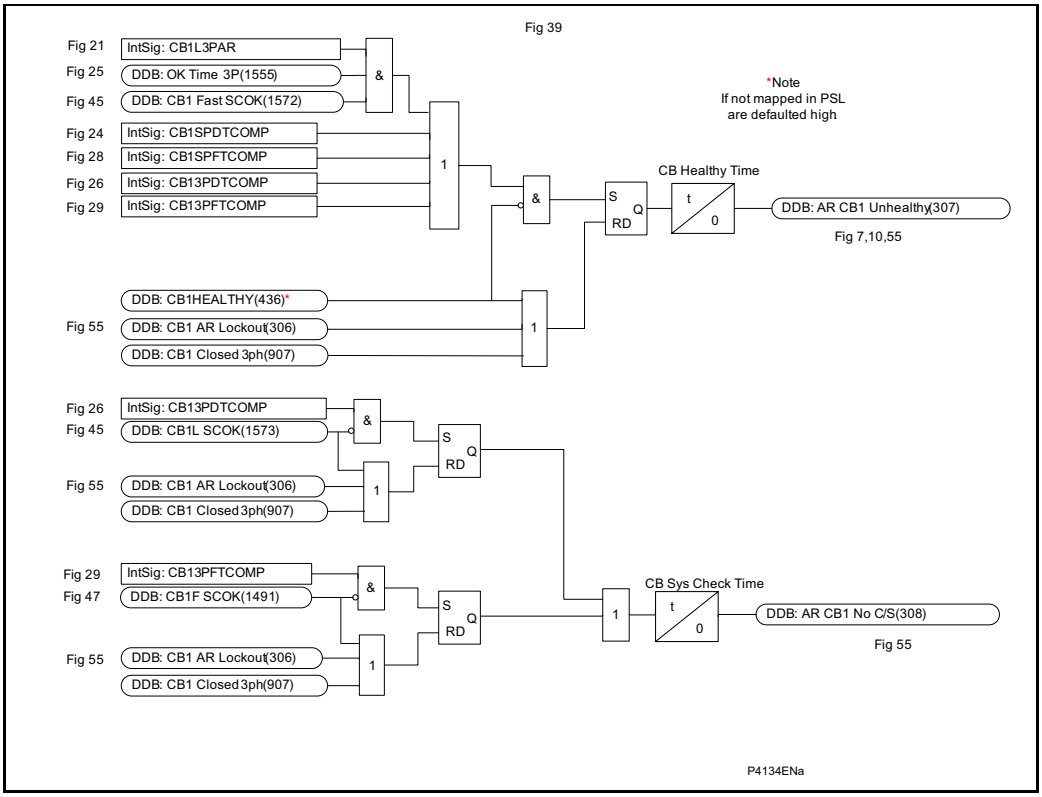

Figure 39 CB healthy & system check timers

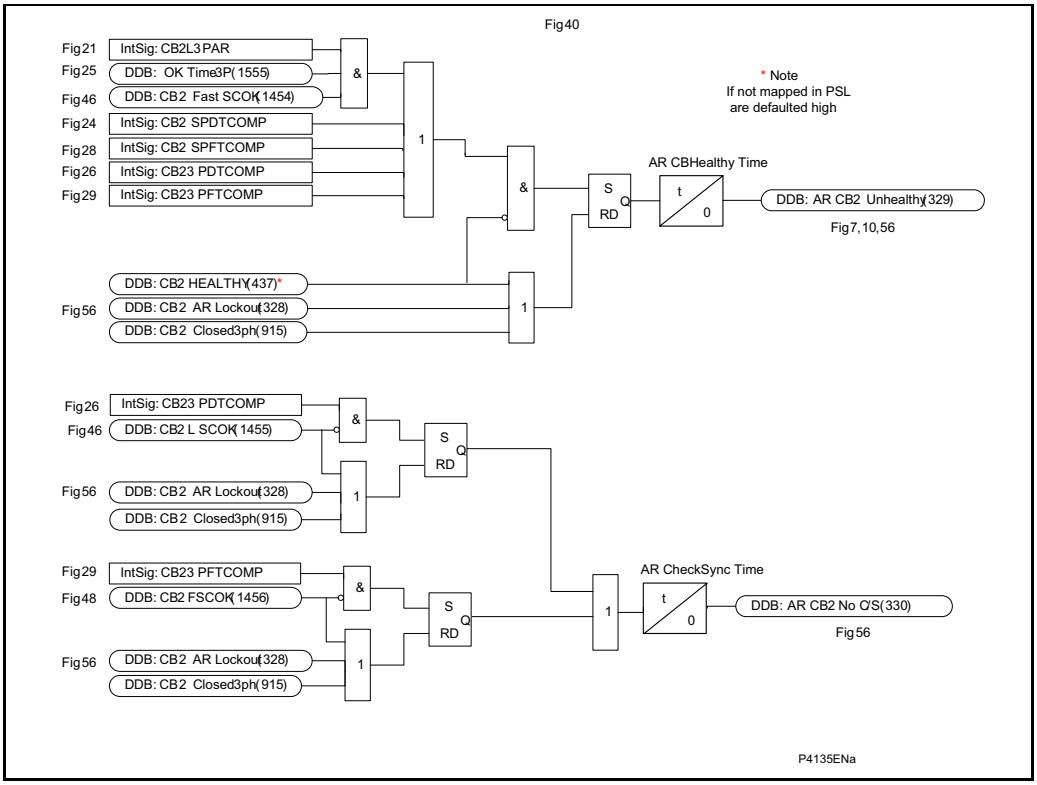

Figure 40 CB2 healthy & system check timers

OP

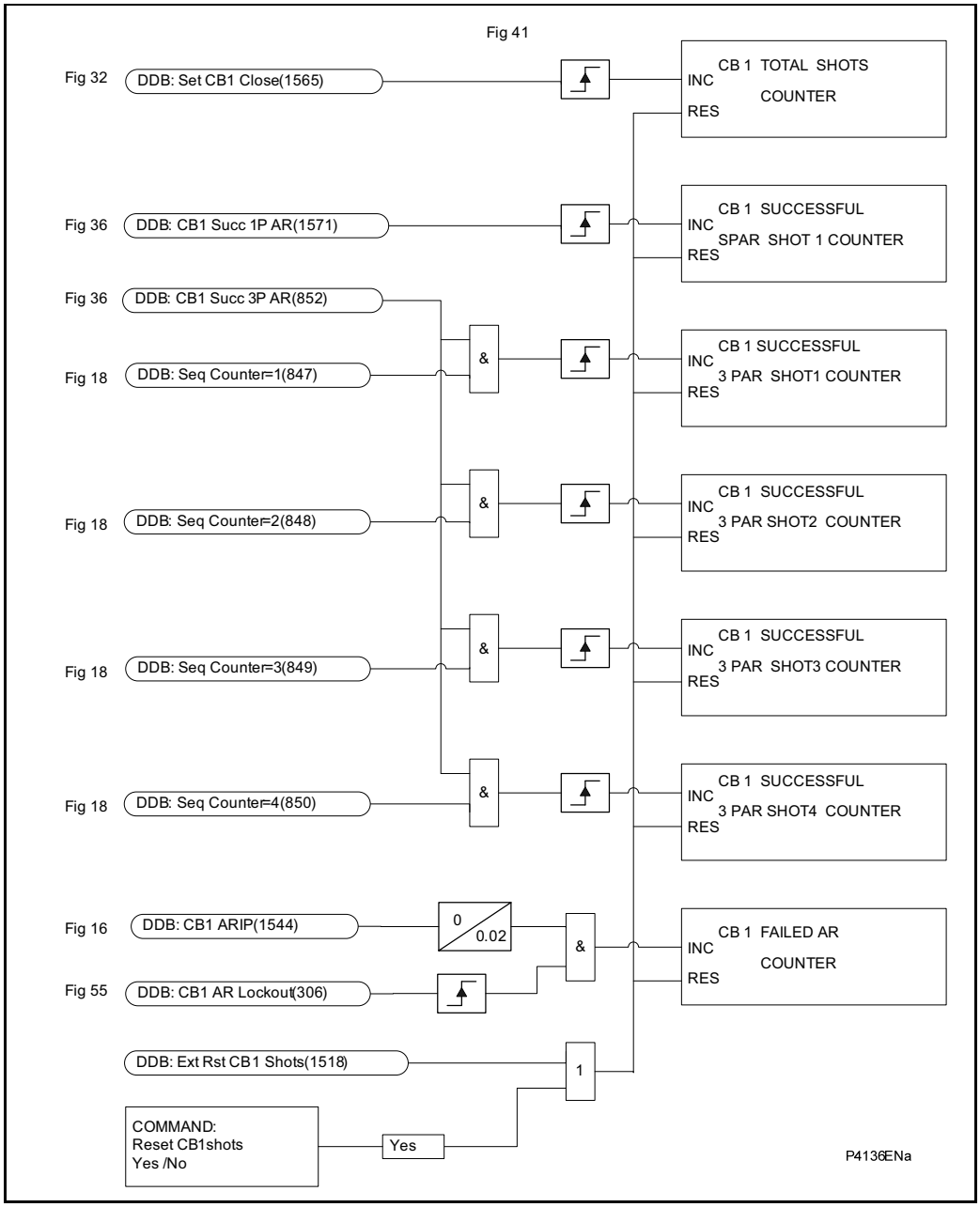

Figure 41 AR shots counters

OP

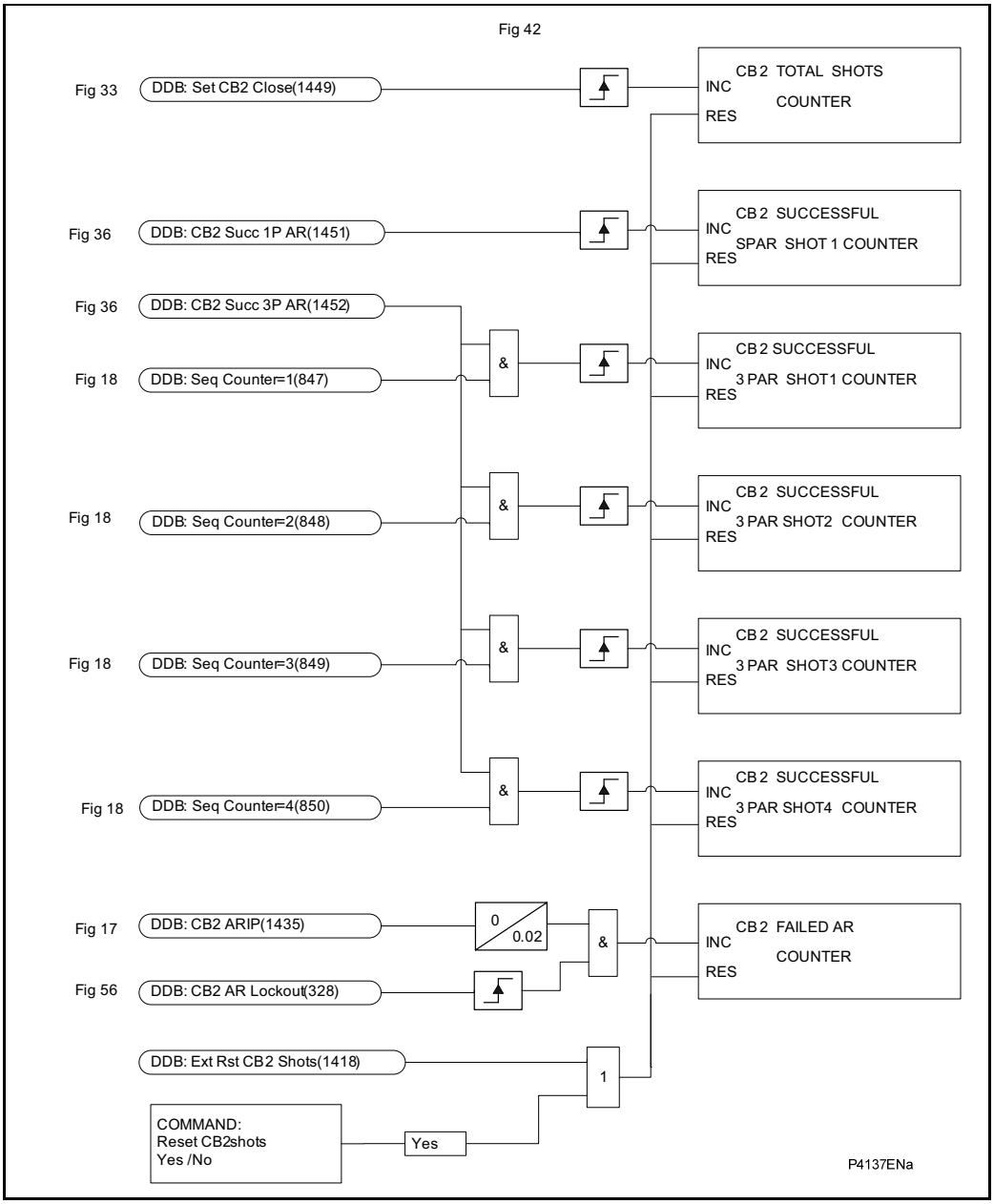

Figure 42 CB2 AR shots counters

OP

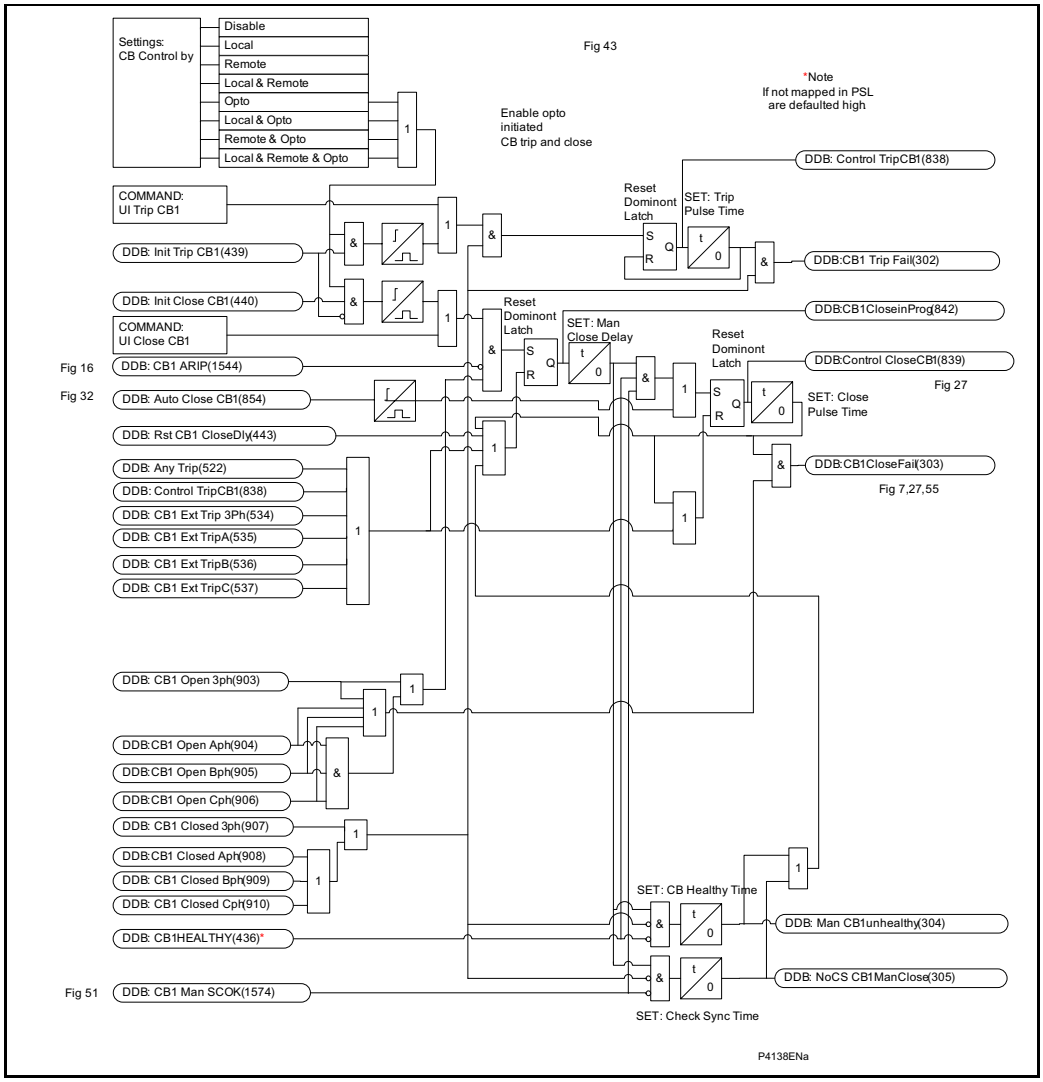

Figure 43 CB1 circuit breaker control

OP

OP

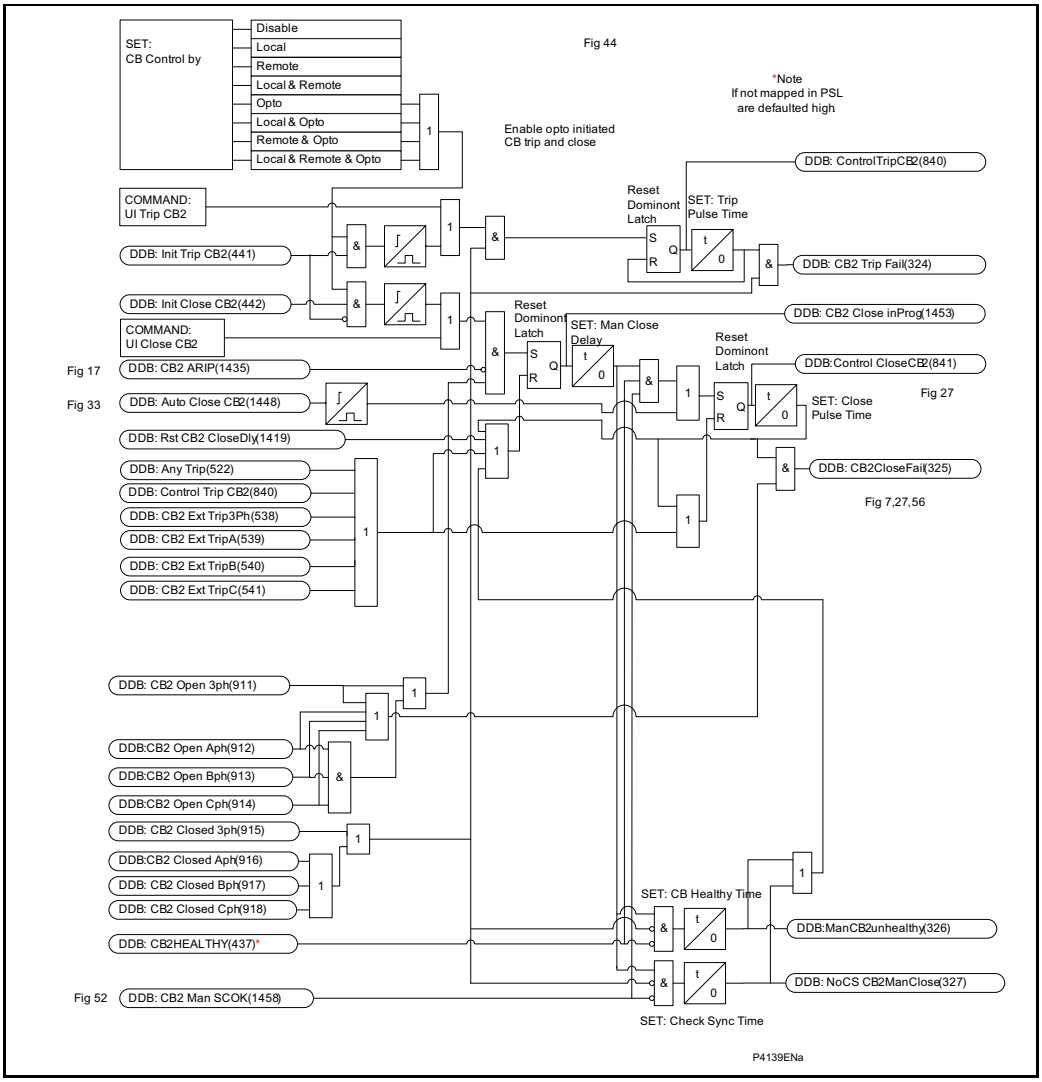

Figure 44 CB2 circuit breaker control

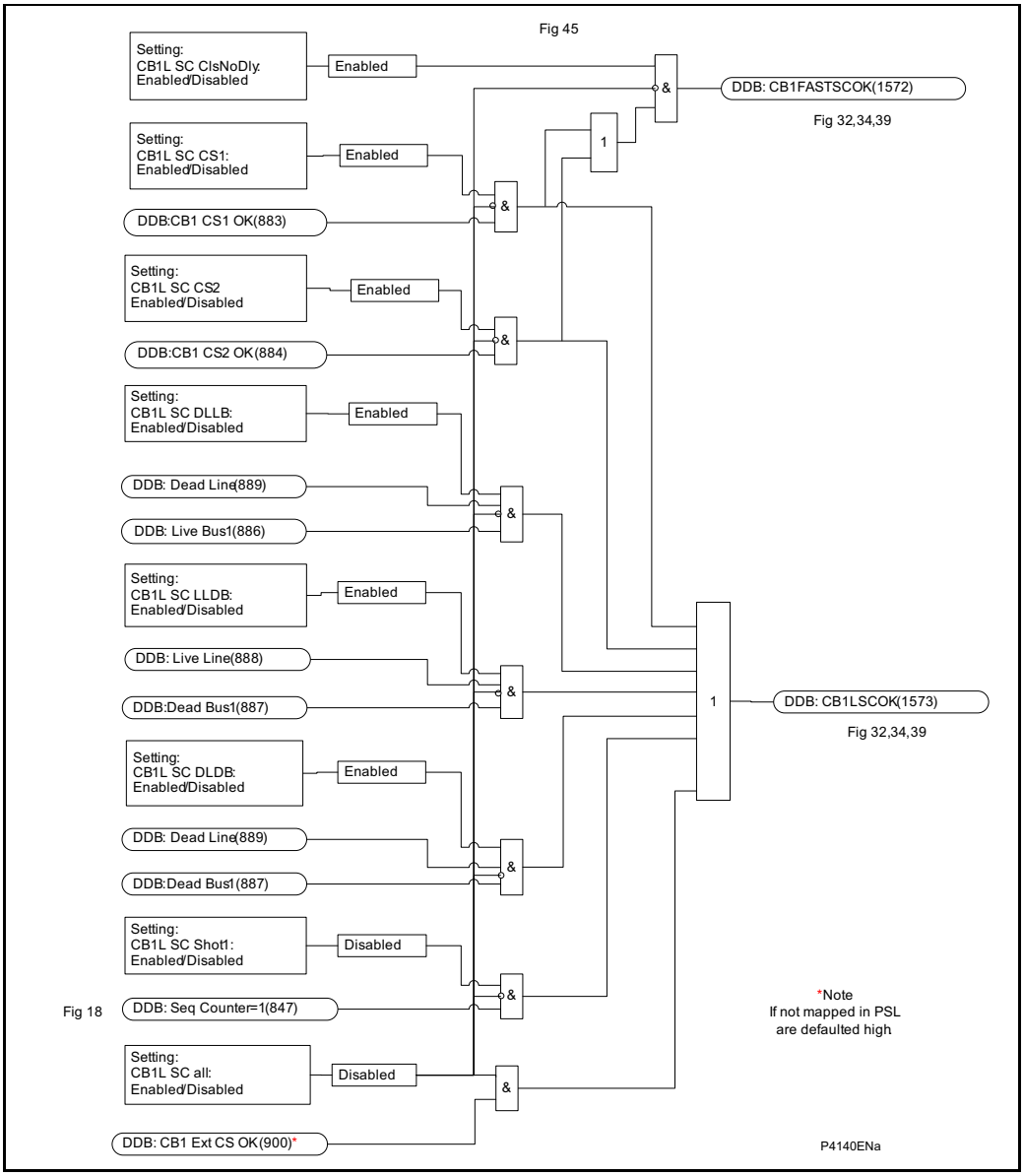

Figure 45 CB1 lead 3PAR system check

OP

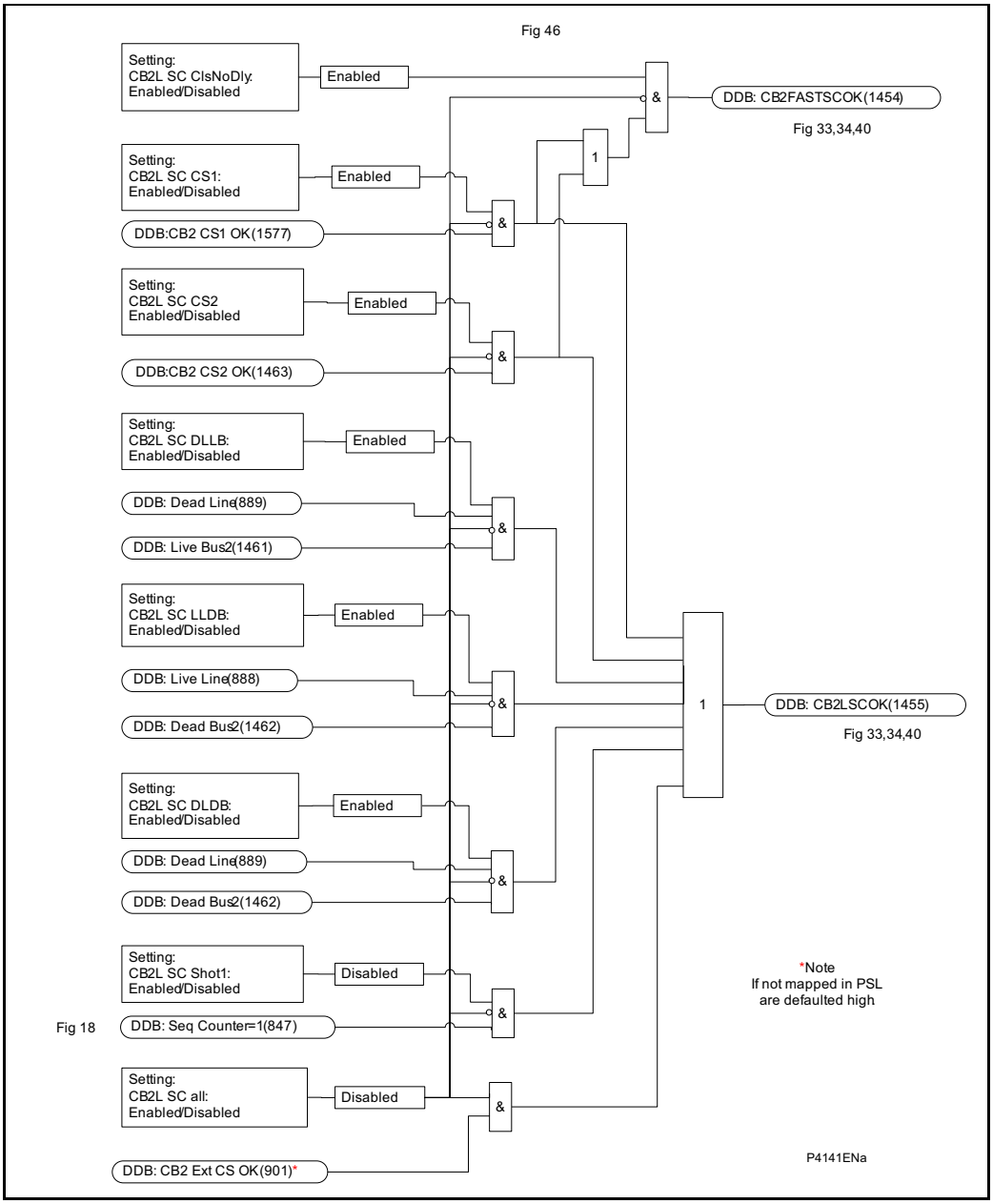

Figure 46 CB2 lead 3PAR system check

OP

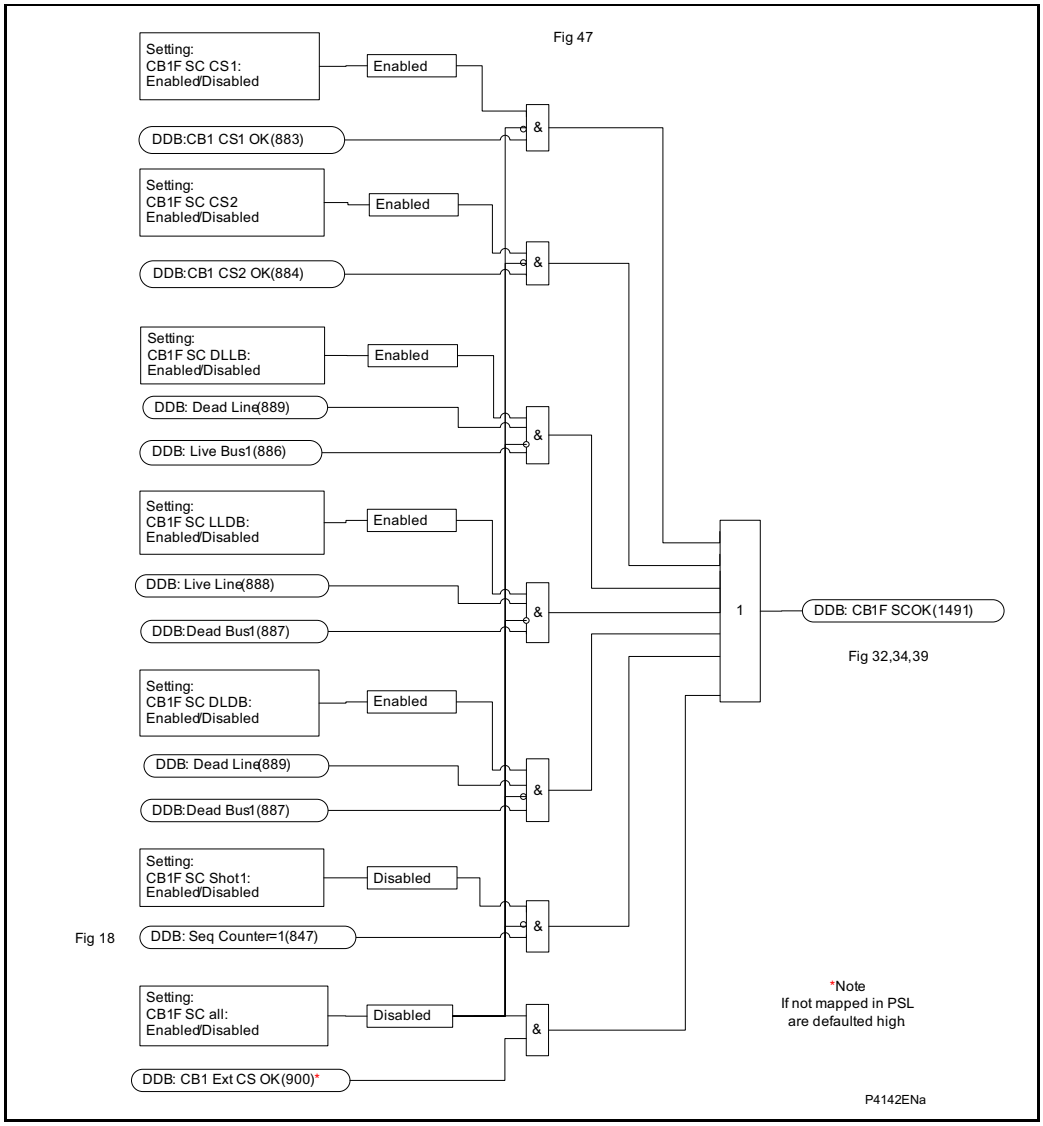

Figure 47 CB1 follow 3PAR system check

OP

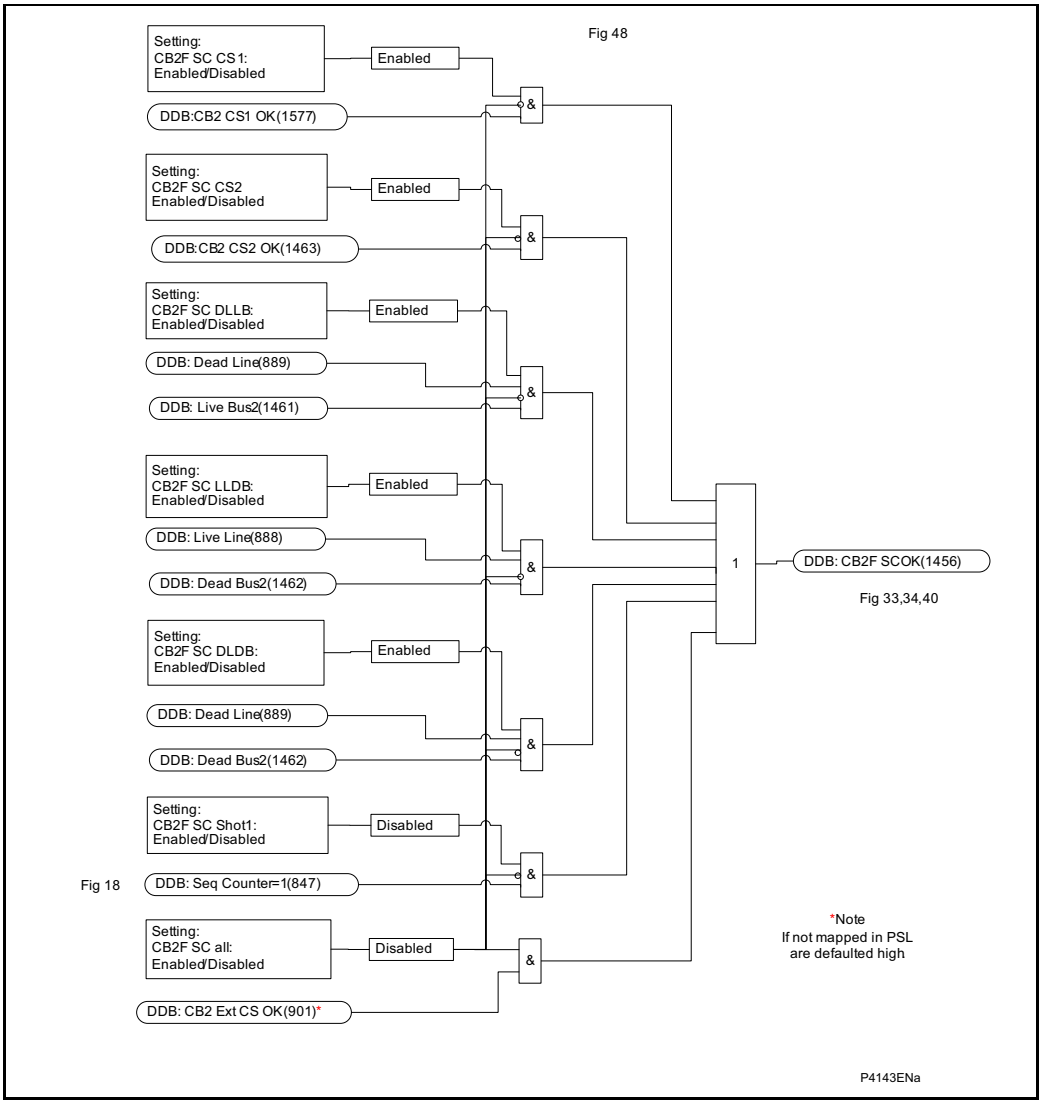

Figure 48 CB2 follow 3PAR system check

OP

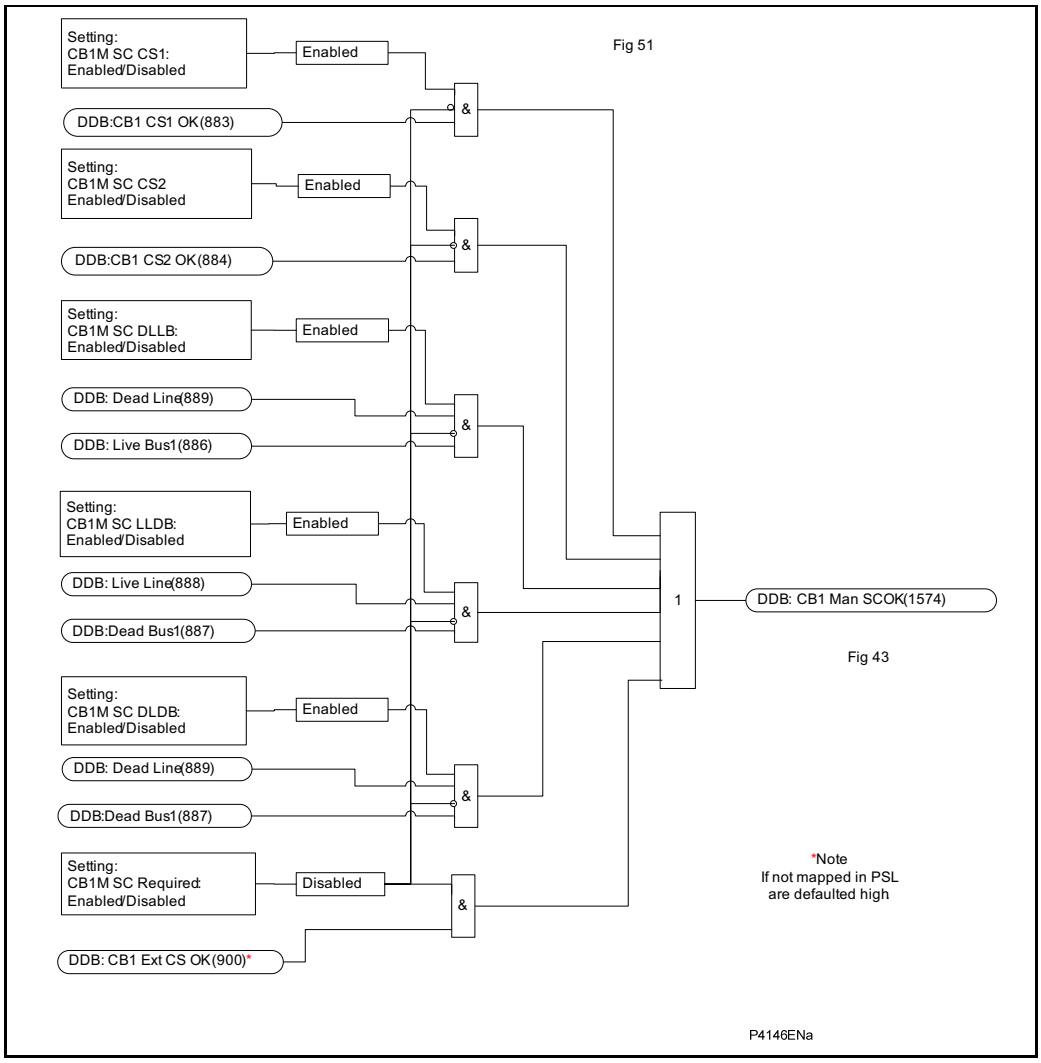

Figure 51 CB1 man. close system check

OP

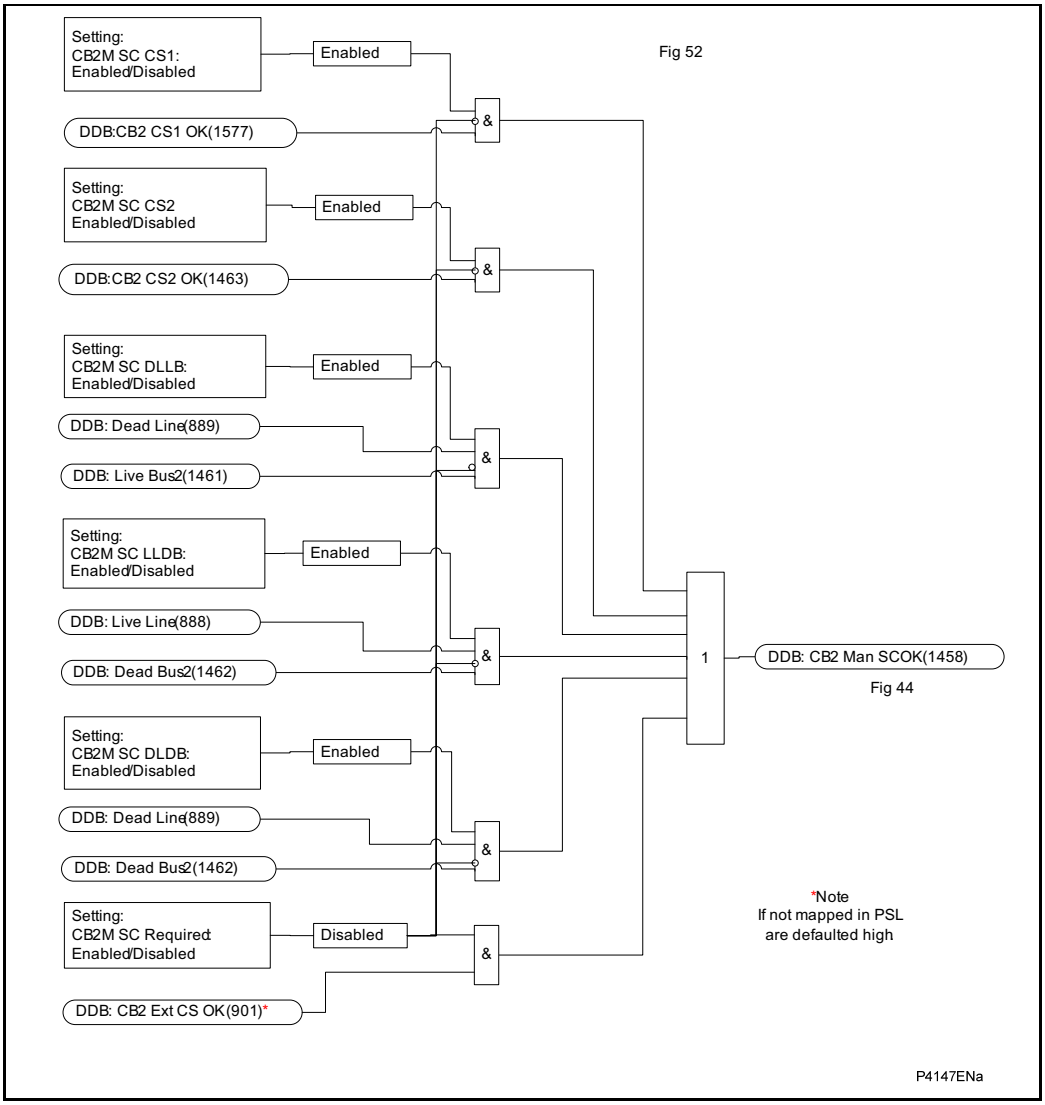

Figure 52 CB2 man. close system check

OP

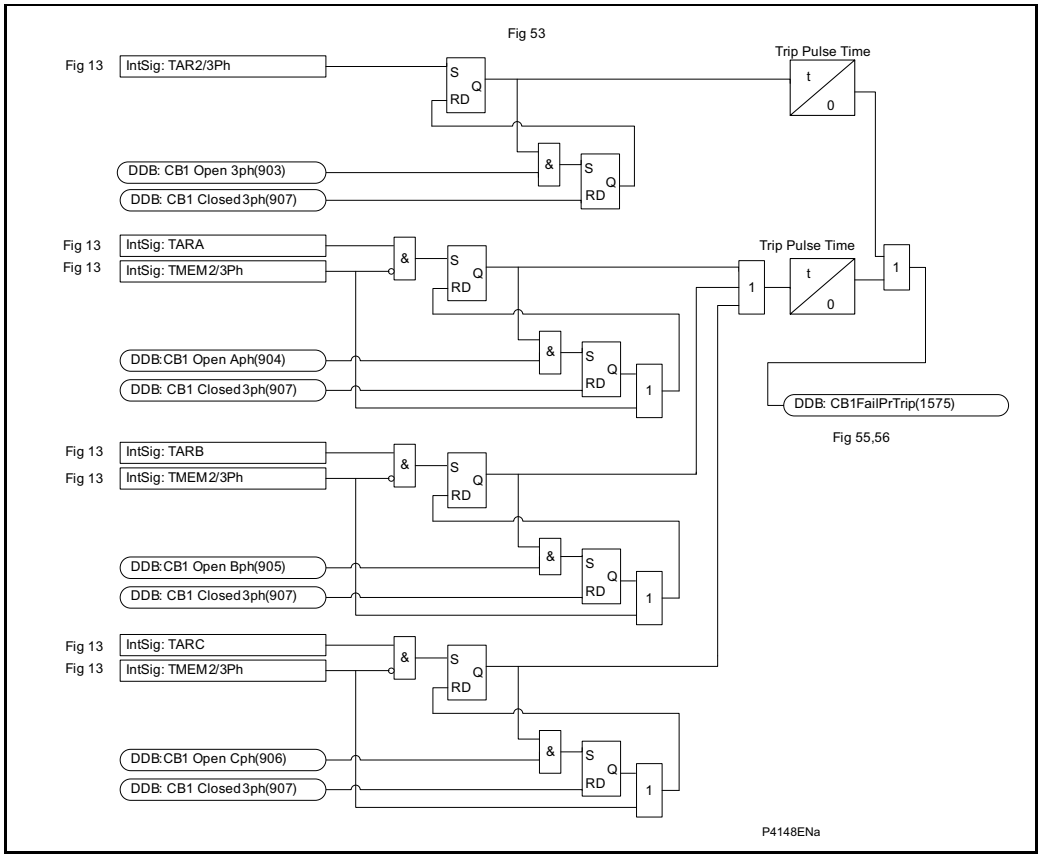

Figure 53 CB1 trip time monitor

OP

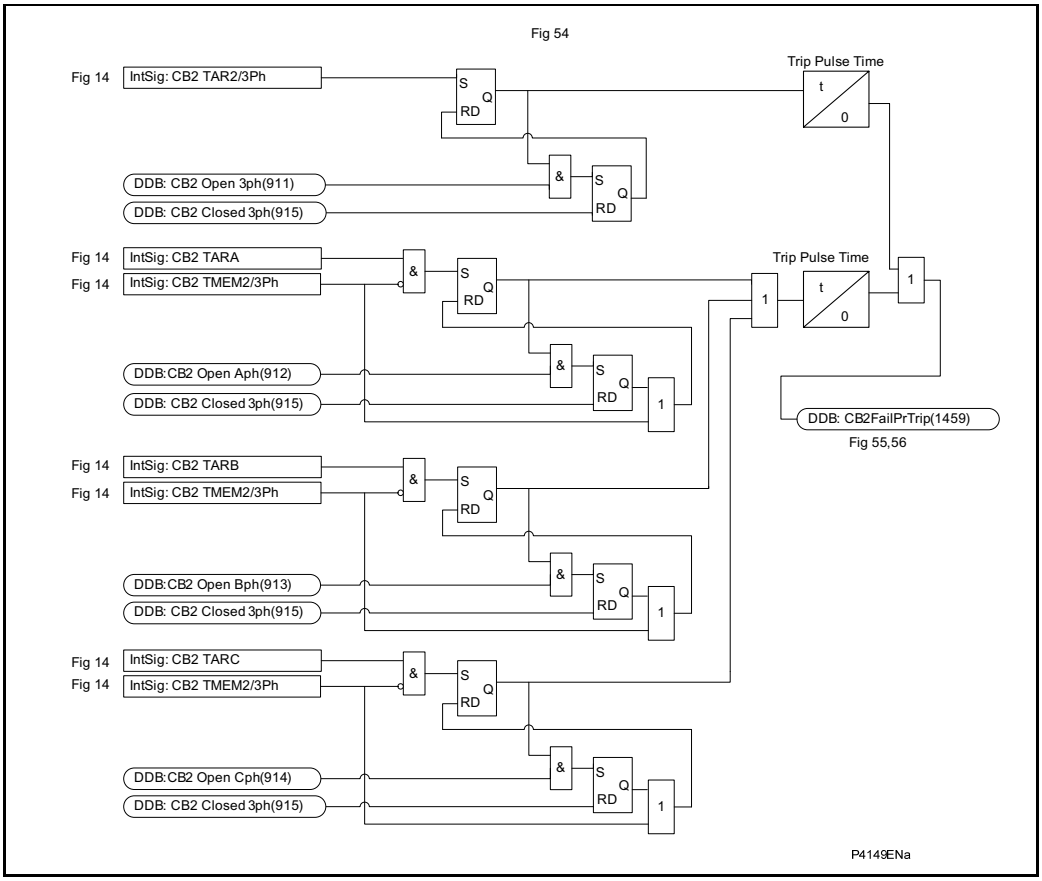

Figure 54 CB2 trip time monitor

OP

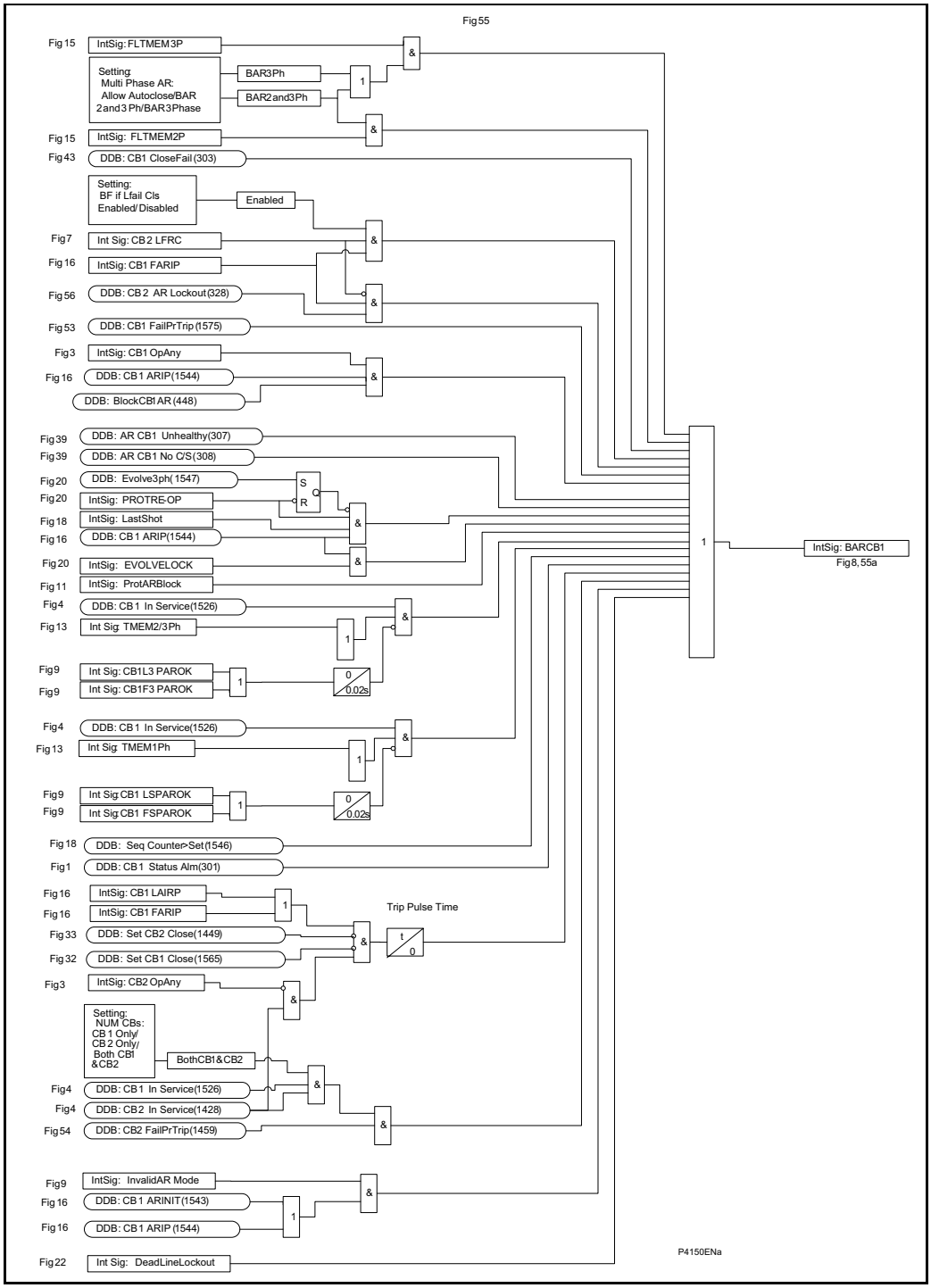

Figure 55 Auto-reclose lockout – CB1

OP

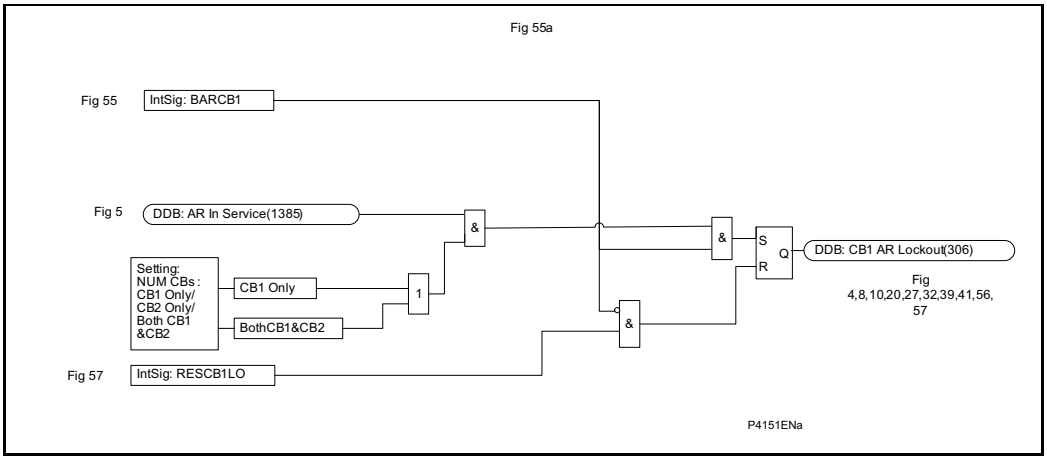

Auto-reclose lockout – CB1

OP

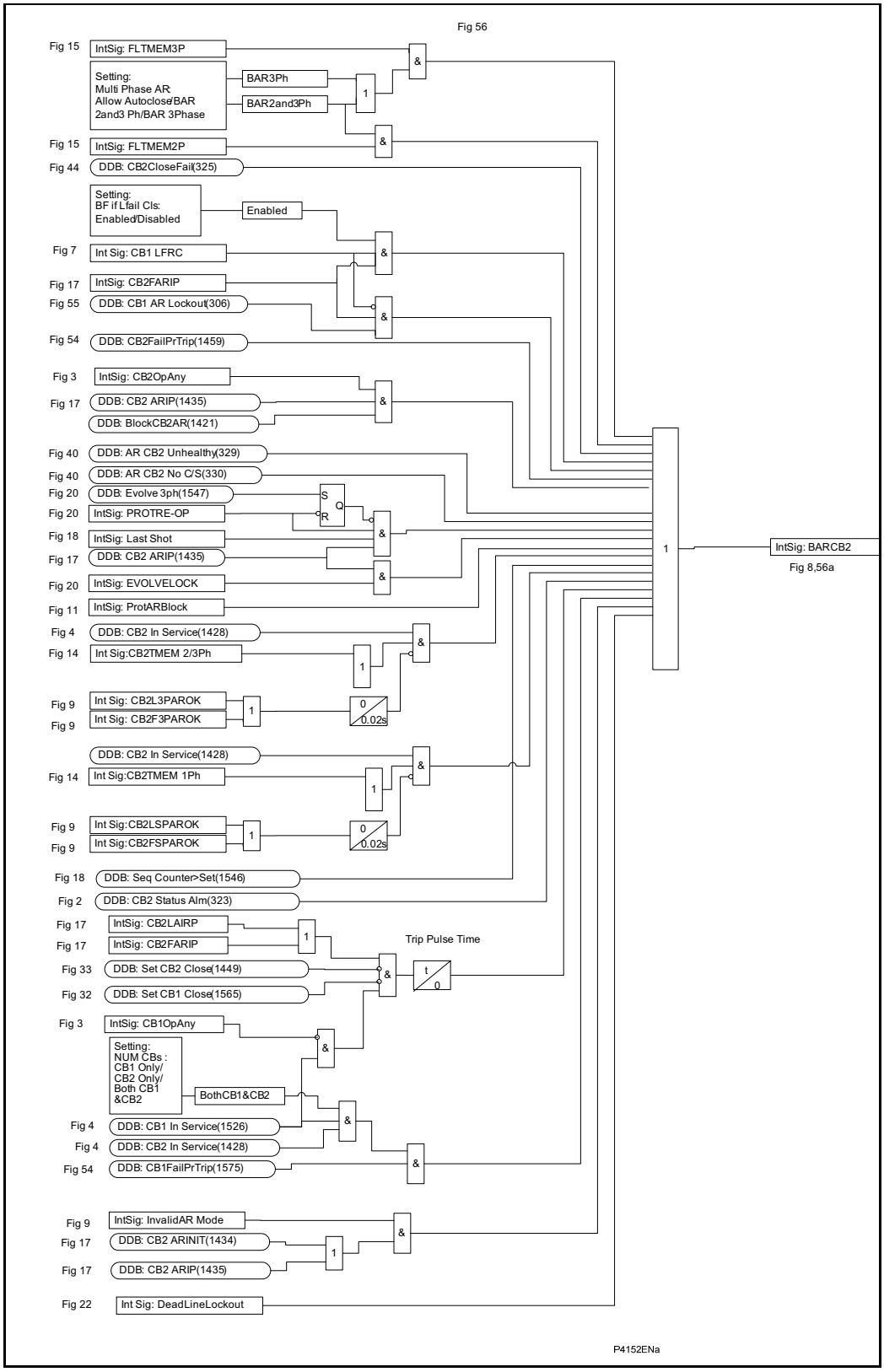

Figure 56 Auto-reclose lockout – CB2

OP

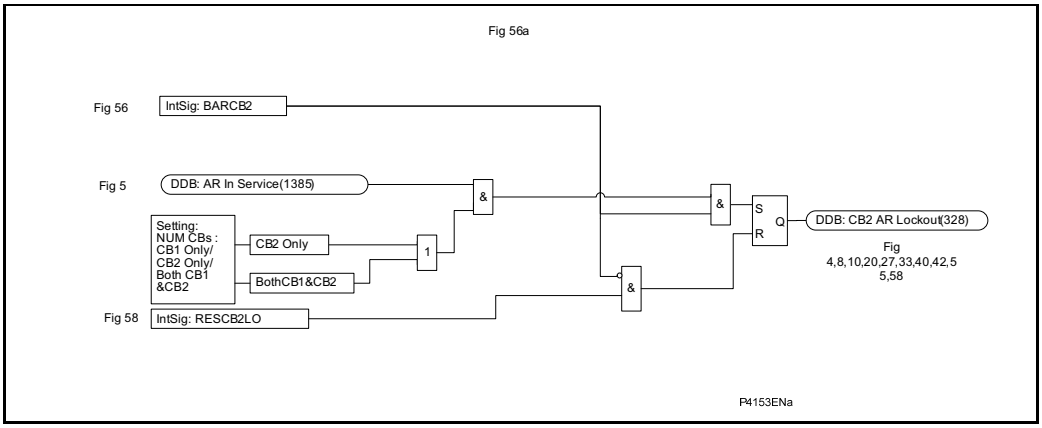

Auto-reclose lockout – CB2

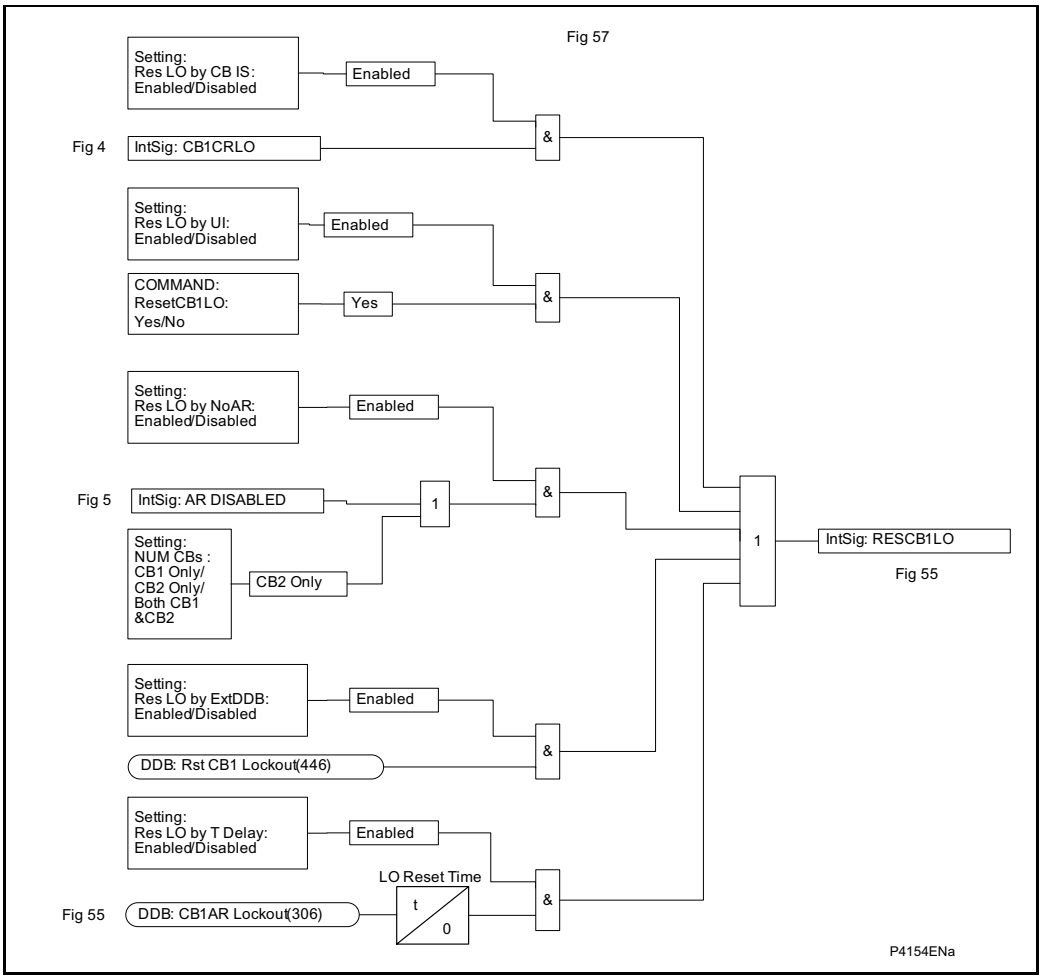

Figure 57 Reset CB1 lockout

OP

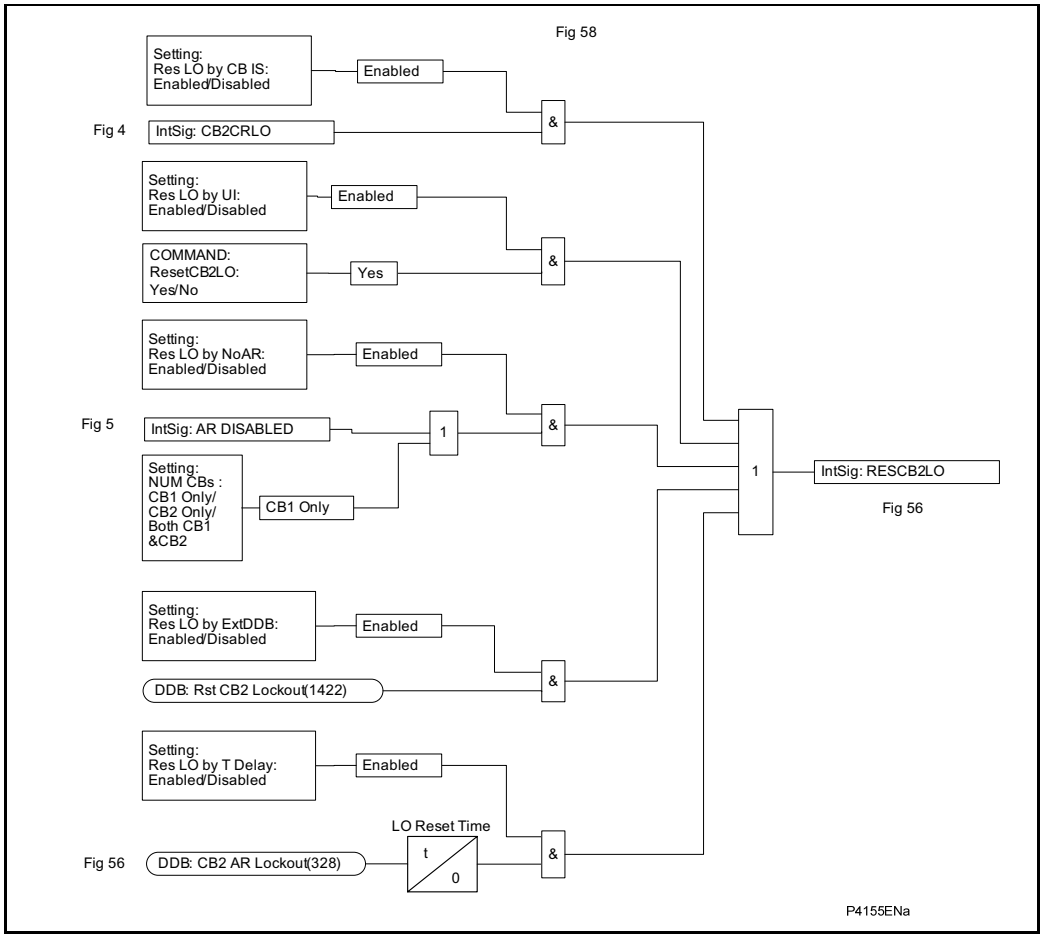

Figure 58 Reset CB2 lockout

OP

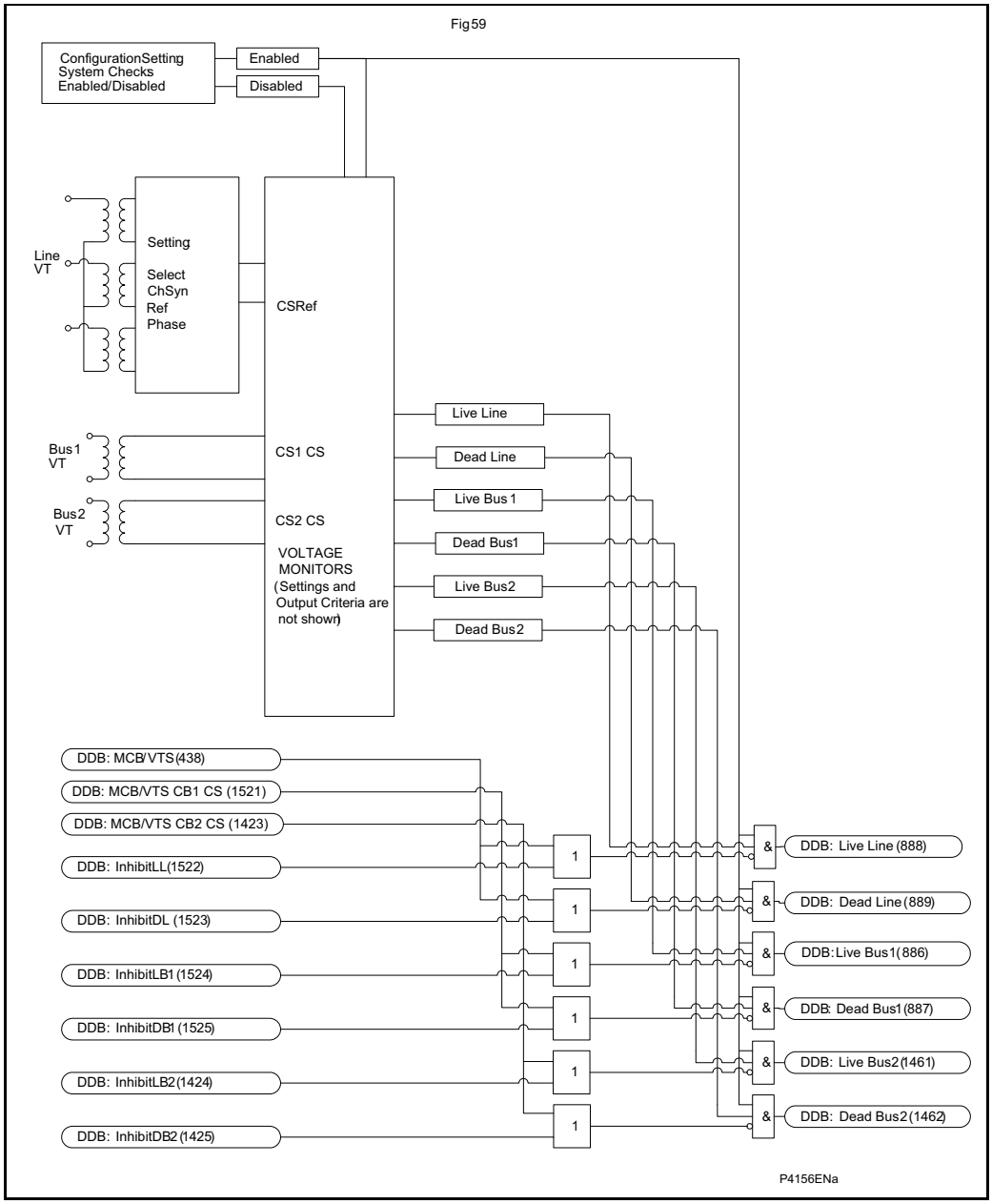

Figure 59 System checks – voltage monitor

OP

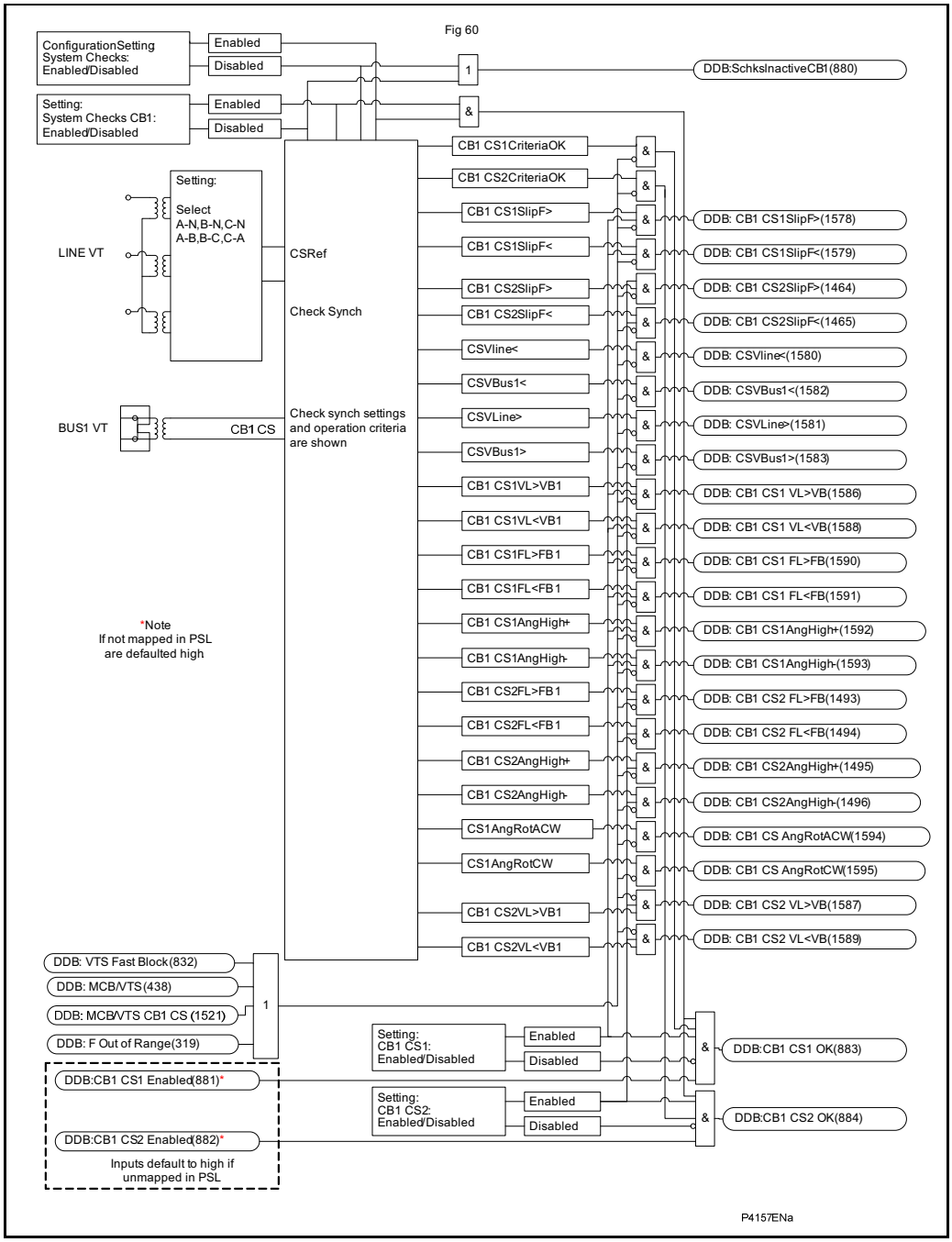

Figure 60 CB1 synch check signals

OP

OP

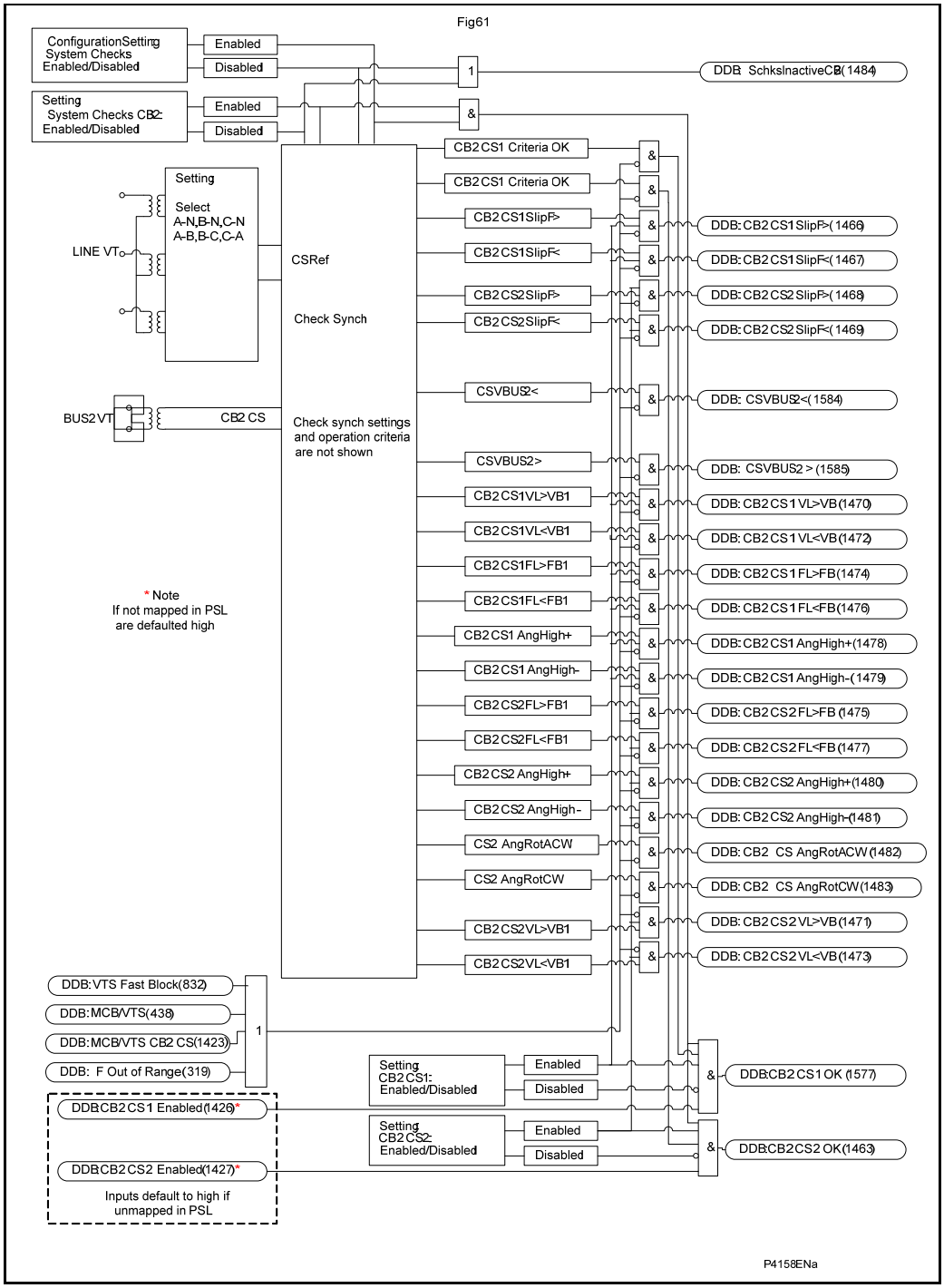

Figure 61 CB2 synch check signals

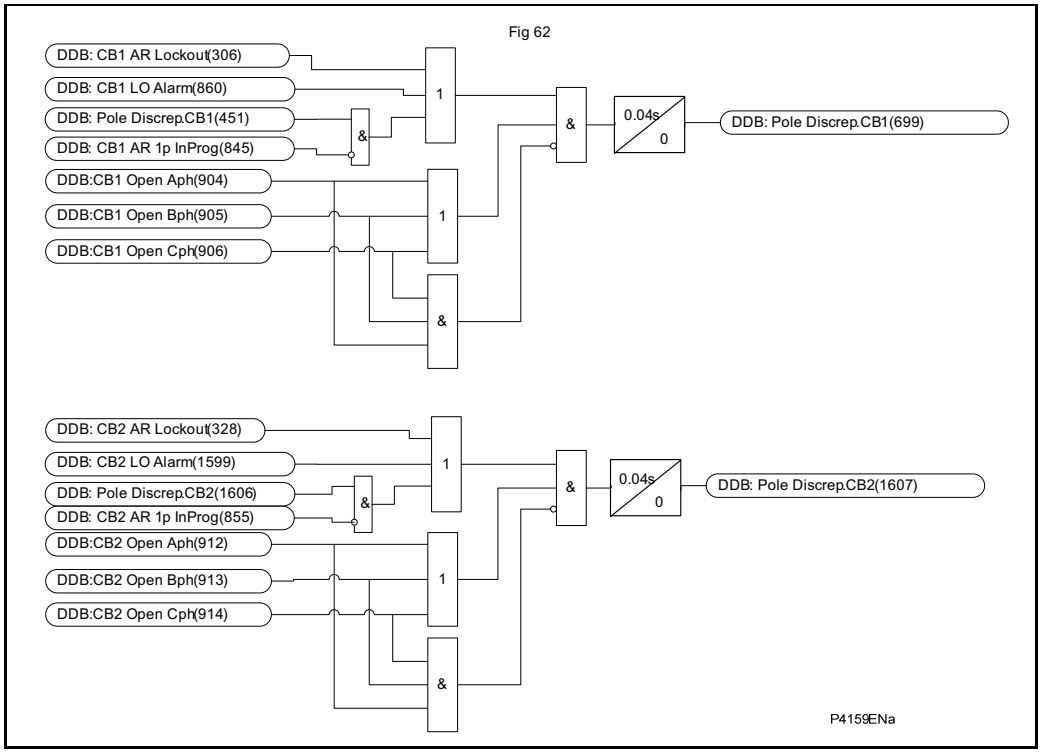

Figure 62 Pole discrepancy

OP

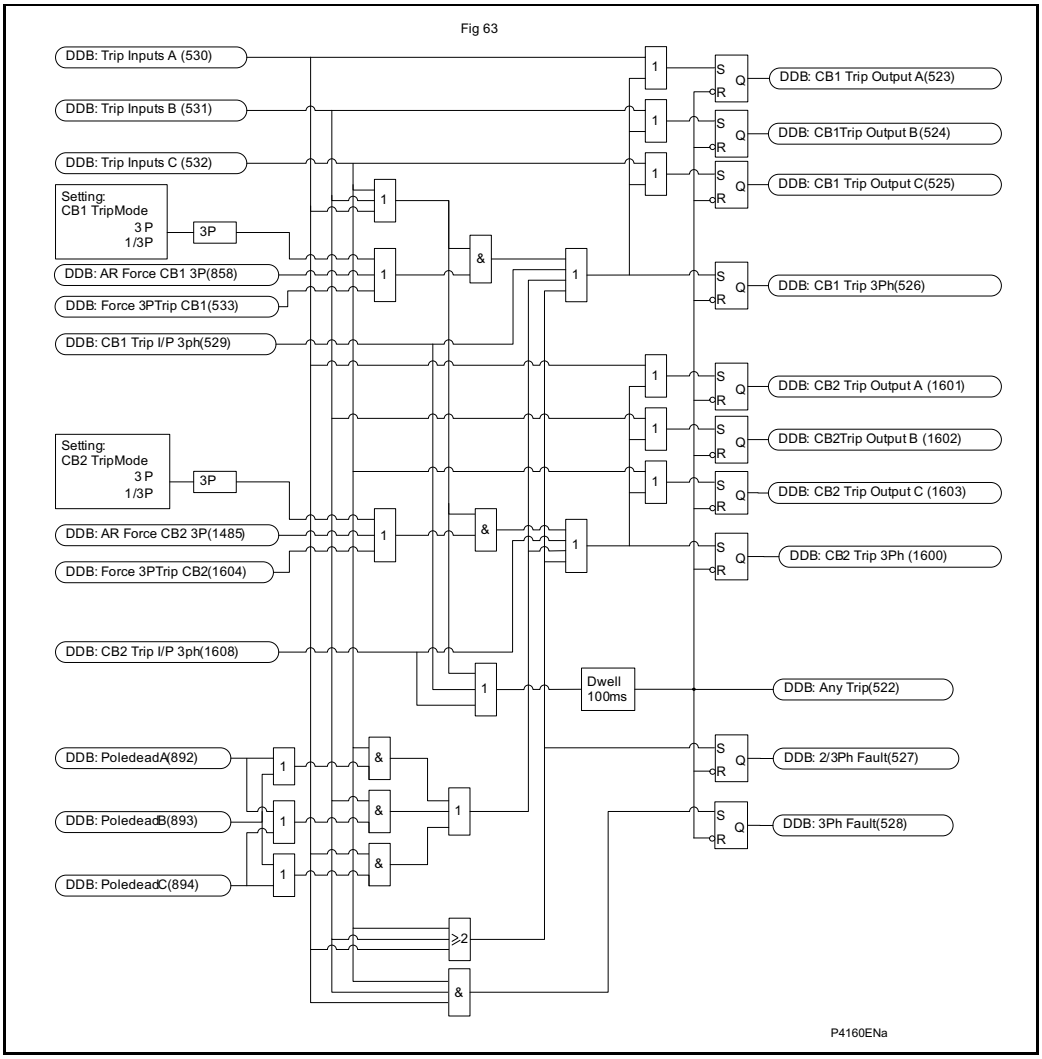

Figure 63 CB trip conversion

OP

7. P544/P546 CIRCUIT BREAKER CONTROL AND AUTO-RECLOSE LOGIC: INTERNAL SIGNAL DEFIN ITIONS

The breaker control functionality of the P544/P546 is described in the figures in the previous section. Within that description a number of signals that are internal to the logic of the circuit breaker control are featured. Unlike the DDB signals, these internal signals cannot be accessed using the programmable scheme logic. They are hard-coded into the application software. This section lists those signals and provides a brief description to aid understanding.

Note: This section lists only the hard-coded internal signals used in the circuit breaker control. The DDB signals featuring in the logic are described in the programmable logic chapter (P54x_EN_PL) of this manual.

Name	Description
3PDTCOMP	Int Sig: Three phase dead time complete
AR DISABLED	Int Sig: Overall autoreclosing disabled
BAR CB1	Int Sig from “Autoreclose Lockout – CB1”
BAR CB2	Int Sig from “Autoreclose Lockout – CB2”
CB1 3PDTCOMP	Int Sig: CB1 3PAR dead time complete
CB1 3PFTCOMP	Int Sig: CB1 3PAR follower time complete
CB1 3POK	Int Sig: CB1 OK for 3P AR (leader or follower)
CB1 ARSUCC	Int Sig: CB1 auto-reclose sucessful
CB1 CS1 AngHigh-	Int Sig + DDB: Line/Bus1 phase angle in range: -CB1 CS1 Angle to -180deg
CB1 CS1 AngHigh+	Int Sig + DDB: Line/Bus1 phase angle in range: +CB1 CS1 Angle to +180deg
CB1 CS1 FL<FB	Int Sig + DDB: Bus1 F > (Line F + “CB1 CS1 SlipFreqf”)
CB1 CS1 FL>FB	Int Sig + DDB: Line F > (Bus1 F + “CB1 CS1 SlipFreqf”)
CB1 CS1 OK	Int Sig + DDB: CB1 CS1 is enabled and Line and Bus 1 voltages meet CB1 CS1 settings
CB1 CS1 SlipF<	Int Sig + DDB: Line-Bus 1 slip freq < CB1 CS1 SlipFreq setting
CB1 CS1 SlipF>	Int Sig + DDB: Line-Bus 1 slip freq > CB1 CS1 SlipFreq setting
CB1 CS1 VL<VB	Int Sig + DDB: Bus1 V > (Line V + “CB1 CS1 VDiff”)
CB1 CS1 VL>VB	Int Sig + DDB: Line V > (Bus1 V + “CB1 CS1 VDiff”)
CB1 CS2AngHigh-	Int Sig + DDB: Line/Bus1 phase angle in range: -CB1 CS2 Angle to -180deg

OP

Name	Description
CB1 CS2AngHigh+	Int Sig + DDB: Line/Bus1 phase angle in range: +CB1 CS2 Angle to +180deg
CB1 CS2FL<FB	Int Sig + DDB: Bus1 F > (Line F + “CB1 CS2 SlipFreqf”)
CB1 CS2FL>FB	Int Sig + DDB: Line F > (Bus1 F + “CB1 CS2 SlipFreqf”)
CB1 CS2OK	Int Sig + DDB: CB1 CS2 is enabled and Line and Bus 1 voltages meet CB1 CS2 settings
CB1 CS2SlipF<	Int Sig + DDB: Line-Bus 1 slip freq < CB1 CS2 SlipFreq setting
CB1 CS2SlipF>	Int Sig + DDB: Line-Bus 1 slip freq > CB1 CS2 SlipFreq setting
CB1 CS2VL<VB	Int Sig + DDB: Bus1 V > (Line V + “CB1 CS2 VDiff”)
CB1 CS2VL>VB	Int Sig + DDB: Line V > (Bus1 V + “CB1 CS2 VDiff”)
CB1 FARIP	Int Sig : CB1 ARIP as follower
CB1 LARIP	Int Sig : CB1 ARIP as leader
CB1 Op1P	Int Sig: CB1 open single phase
CB1 Op2/3P	Int Sig: CB1 open on 2 or 3 phases
CB1 OpAny	Int Sig: CB1 open on 1, 2 or 3 phases
CB1 SPOK	Int Sig: CB1 OK for SP AR (leader or follower)
CB1 SysCh Off	Int Sig + DDB: CB1 CS1 & CB1 CS2checks disabled
CB1CRLO	Int Sig: CB1 in service – reset CB1 lockout
CB1F3PAR	Int Sig from “Three Phase AR Cycle Selection”
CB1F3PAROK	Int Sig: CB1 OK to 3Ph AR as follower
CB1FSPAR	Int Sig: CB1 SPAR in progress as follower
CB1FSPAROK	Int Sig: CB1 OK to SP AR as follower
CB1L3PAR	Int Sig from “Three Phase AR Cycle Selection”
CB1L3PAR	Int Sig from “Single Phase AR Cycle Selection”
CB1L3PAROK	Int Sig: CB1 OK to 3Ph AR as leader
CB1LFRC	Int Sig: CB1 failed to reclose as leader
CB1LFRC	Int Sig from “Leader/Follower Logic – 1”
CB1LSPAR	Int Sig from “Single Phase AR Cycle Selection”
CB1LSPAROK	Int Sig: CB1 OK to SP AR as leader
CB1SPDTCOMP	Int Sig: CB1 SP dead time complete
CB1SPFTCOMP	Int Sig: CB1 SP follower time complete

Name	Description
CB2 3PDTCOMP	Int Sig: CB2 3PAR dead time complete
CB2 3PFTCOMP	Int Sig: CB2 3PAR follower time complete
CB2 3POK	Int Sig: CB2 OK for 3P AR (leader or follower)
CB2 ARSUCC	Int Sig: CB2 auto-reclose sucessful
CB2 CS1 AngHigh-	Int Sig + DDB: Line/Bus2 phase angle in range: -CB2 CS1 Angle to -180deg
CB2 CS1 AngHigh+	Int Sig + DDB: Line/Bus2 phase angle in range: +CB2 CS1 Angle to +180deg
CB2 CS1 FL<FB	Int Sig + DDB: Bus2 F > (Line F + “CB2 CS1 SlipFreqf”)
CB2 CS1 FL>FB	Int Sig + DDB: Line F > (Bus2 F + “CB2 CS1 SlipFreqf”)
CB2 CS1 OK	Int Sig + DDB: CB2 CS1 is enabled and Line and Bus 2 voltages meet CB2 CS1 settings
CB2 CS1 SlipF<	Int Sig + DDB: Line-Bus 2 slip freq < CB2 CS1 SlipFreq setting
CB2 CS1 SlipF>	Int Sig + DDB: Line-Bus 2 slip freq > CB2 CS1 SlipFreq setting
CB2 CS1 VL<VB	Int Sig + DDB: Bus2 V > (Line V + “CB2 CS1 VDiff”)
CB2 CS1 VL>VB	Int Sig + DDB: Line V > (Bus2 V + “CB2 CS1 VDiff”)
CB2 CS2AngHigh-	Int Sig + DDB: Line/Bus2 phase angle in range: -CB2 CS2 Angle to -180deg
CB2 CS2AngHigh+	Int Sig + DDB: Line/Bus2 phase angle in range: +CB2 CS2 Angle to +180deg
CB2 CS2FL<FB	Int Sig + DDB: Bus2 F > (Line F + “CB2 CS2 SlipFreqf”)
CB2 CS2FL>FB	Int Sig + DDB: Line F > (Bus2 F + “CB2 CS2 SlipFreqf”)
CB2 CS2OK	Int Sig + DDB: CB2 CS2 is enabled and Line and Bus 2 voltages meet CB2 CS2 settings
CB2 CS2SlipF<	Int Sig + DDB: Line-Bus 2 slip freq < CB2 CS2 SlipFreq setting
CB2 CS2SlipF>	Int Sig + DDB: Line-Bus 2 slip freq > CB2 CS2 SlipFreq setting
CB2 CS2VL<VB	Int Sig + DDB: Bus2 V > (Line V + “CB2 CS2 VDiff”)
CB2 CS2VL>VB	Int Sig + DDB: Line V > (Bus2 V + “CB2 CS2 VDiff”)
CB2 FARIP	Int Sig: CB2 ARIP as follower

OP

Name	Description
CB2 LARIP	Int Sig: CB2 ARIP as leader
CB2 Op1P	Int Sig: CB2 open single phase
CB2 Op2/3P	Int Sig: CB2 open on 2 or 3 phases
CB2 OpAny	Int Sig: CB2 open on 1, 2 or 3 phases
CB2 SPOK	Int Sig: CB2 OK for SP AR (leader or follower)
CB2 SysCh Off	Int Sig + DDB: CB2 CS1 & CB2 CS2checks disabled
CB2 TAR 2/3Ph	Int Sig: 2Ph or 3Ph trip & AR initiation CB2
CB2 TARA	Int Sig: A Ph trip & AR initiation CB2
CB2 TARB	Int Sig: B Ph trip & AR initiation CB2
CB2 TARC	Int Sig: C Ph trip & AR initiation CB2
CB2 TMEM 1Ph	Int Sig: CB1 1Ph trip +AR AR initiation memory CB2
CB2 TMEM 2/3Ph	Int Sig: CB1 2Ph trip +AR AR initiation memory CB2
CB2 TMEM 3Ph	Int Sig: CB1 3Ph trip +AR AR initiation memory CB2
CB2CRLO	Int Sig: CB2 in service – reset CB2 lockout
CB2F3PAR	Int Sig from “Three Phase AR Cycle Selection”
CB2F3PAROK	Int Sig: CB2 OK to 3Ph AR as follower
CB2FSPAR	Int Sig: CB2 SPAR in progress as follower
CB2FSPAROK	Int Sig: CB2 OK to SP AR as follower
CB2L3PAR	Int Sig from “Three Phase AR Cycle Selection”
CB2L3PAROK	Int Sig: CB2 OK to 3Ph AR as leader
CB2LFRC	Int Sig: CB2 failed to reclose as leader
CB2LFRC	Int Sig from “Leader/Follower Logic – 1”
CB2LSPAR	Int Sig from “Single Phase AR Cycle Selection”
CB2LSPAROK	Int Sig: CB2 OK to SP AR as leader
CB2SPDTCOMP	Int Sig: CB2 SP dead time complete
CB2SPFTCOMP	Int Sig: CB2 SP follower time complete
CBARCancel	Int Sig: Stop and reset CB1 and CB2 AR In progress
CS VBus1<	Int Sig + DDB: Bus1 Volts < CS UV setting
CS VBus1>	Int Sig + DDB: Bus1 Volts > CS OV setting
CS VBus2<	Int Sig + DDB: Bus2 Volts < CS UV setting
CS VBus2>	Int Sig + DDB: Bus2 Volts > CS OV setting
CS VLine<	Int Sig + DDB: Line Volts < CS UV setting
CS VLine>	Int Sig + DDB: Line Volts > CS OV setting

Name	Description
CS1 Ang Rot ACW	Int Sig + DDB: Line freq > (Bus1 freq + 0.001Hz) (CS1 Angle Rotating Anticlockwise)
CS1 Ang Rot CW	Int Sig + DDB: Bus1 freq > (Line freq + 0.001Hz) (CS1 Angle Rotating Clockwise)
CS2 Ang Rot ACW	Int Sig + DDB: Line freq > (Bus2 freq + 0.001Hz) (CS2 Angle Rotating Anticlockwise)
CS2 Ang Rot CW	Int Sig + DDB: Bus2 freq > (Line freq + 0.001Hz) (CS2 Angle Rotating Clockwise)
Dead Bus 1	Int Sig + DDB: CS1 V magnitude < Dead Bus 1 setting
Dead Bus 2	Int Sig + DDB: CS2 V magnitude < Dead Bus 2 setting
Dead Line	Int Sig + DDB: Line V magnitude < Dead Line setting
DeadLineLockout	Int Sig: When setting “3PDT Start When LD” is set to Enabled and the line does not go dead for a time set by “Dead Line Time” then this signal will force the auto-reclose sequence to lockout.
ENABLE CB13PDT	Int Sig: Enable dead time for CB1 3PAR
ENABLE CB1SPDT	Int Sig: Enable dead time for CB1 SPAR
ENABLE CB23PDT	Int Sig: Enable dead time for CB2 3PAR
ENABLE CB2SPDT	Int Sig: Enable dead time for CB2 SPAR
EVOLVE LOCK	Int Sig: Lockout for 2nd trip after Discrim Tim
F Out of Range	Int Sig from frequency tracking logic
FLTMEM 2P	Int Sig: 2 Ph fault memory
FLTMEM 3P	Int Sig: 3 Ph fault memory
Foll CB1	Int Sig from “Leader & Follower Logic – 2”
Foll CB2	Int Sig from “Leader & Follower Logic – 2”
Foll3PAROK	Int Sig from “Leader & Follower AR Modes Enable”
FollSPAROK	Int Sig from “Leader & Follower AR Modes Enable”
INIT AR	Int Sig: Host protection required to initiate AR
Invalid AR Mode	Int Sig: An invalid state is being indicated by the logic that determines AR mode by opto.
Last Shot	Int Sig: the last shot
Live Bus 1	Int Sig + DDB: CS1 V magnitude >= Live Bus 1 setting

Name	Description
Live Bus 2	Int Sig + DDB: CS2 V magnitude >= Live Bus 2 setting
Live Line	Int Sig + DDB: Line V magnitude >= Live Line setting
OK Time SP	Int Sig from “Single Phase AR Lead CB Dead Time”
PrefLCB1	Int Sig: CB1 is the preferred leader
PrefLCB2	Int Sig: CB2 is the preferred leader
Prot AR Block*	Int Sig: Host protection required to block AR
Prot Re-op	Int Sig from “Protection Re-operation + Evolving Fault”
RESCB1ARSUCC	Int Sig from “Reset CB1 Successful AR Indication
RESCB1LO	Int Sig from “Reset CB1 Lockout”
RESCB2ARSUCC	Int Sig from “Reset CB2 Successful AR Indication
RESCB2LO	Int Sig from “Reset CB2 Lockout”
Reset L-F	Int Sig: From “Protection Re-operation + Evolving fault”
RESPRMEM	Int Sig: Reset “trip & AR” memory
SC Increment	Int Sig: Increment the sequence counter
SCCountoveqShots	Int Sig: Sequence counter has exceeded setting
SET CB1CL	Int Sig from “CB1 Auto Close”
SET CB2CL	Int Sig from “CB2 Auto Close”
SET LCB1	Int Sig: CB1 selected leader
SET LCB1	Int Sig from “Leader/Follower Logic – 1”
SET LCB2	Int Sig: CB2 selected leader
SET LCB2	Int Sig from “Leader/Follower Logic – 1”
SETCB13PCL	Int Sig: CB1 three phase close given
SETCB1SPCL	Int Sig: CB1 single phase close given
SETCB23PCL	Int Sig: CB2 three phase close given
SETCB2SPCL	Int Sig: CB2 single phase close given
SPDTCOMP	Int Sig: Single phase dead time complete
TAR 2/3Ph	Int Sig: 2Ph or 3Ph trip & AR initiation
TARA	Int Sig: A Ph trip & AR initiation
TARANY	Int Sig from “CB1 1 Pole / 3 Pole Trip + AR Initiation”
TARANY	Int Sig: Any trip & AR initiation
TARB	Int Sig: B Ph trip & AR initiation
TARC	Int Sig: C Ph trip & AR initiation

Name	Description
TMEM 1Ph	Int Sig: CB1 1Ph trip +AR AR initiation memory
TMEM 2/3Ph	Int Sig: CB1 2Ph trip +AR AR initiation memory
TMEM 3Ph	Int Sig: CB1 3Ph trip +AR AR initiation memory
TMEM ANY	Int Sig: Any Ph trip & AR initiation memory

OP

AP

APPLICATION NOTES

Date:	**16th March 2009**
Hardware suffix:	**K**
Software versions:	**45 (P543/4/5/6 without Distance)** **55 (P543/4/5/6 with Distance)**
Connection diagrams:	**10P54302 (SH 1 to 2)** **10P54303 (SH 1 to 2)** **10P54400** **10P54404 (SH 1 to 2)** **10P54405 (SH 1 to 2)** **10P54502 (SH 1 to 2)** **10P54503 (SH 1 to 2)** **10P54600** **10P54604 (SH 1 to 2)** **10P54605 (SH 1 to 2)** **10P54606 (SH 1 to 2)**

AP

CONTENTS

(AP) 6-

AP

AP

FIGURES

AP

1. INTRODUCTION

1.1 Protection of overhead line, cable, and hybrid circuits

Overhead lines, typically ranging from 10 kV distribution lines to 800 kV transmission lines, are probably the most fault susceptible items of plant in a modern power system. It is therefore essential that the protection associated with them provides secure and reliable operation.

For distribution systems, continuity of supply is of paramount importance. The majority of faults on overhead lines are transient or semi-permanent in nature. Multi-shot auto-reclose cycles are therefore commonly used in conjunction with instantaneous tripping elements to increase system availability. For permanent faults it is essential that only the faulted section of plant is isolated. As such, high speed, discriminative fault clearance is often a fundamental requirement of any protection scheme on a distribution network.

The requirements for a transmission network must also take into account system stability. Where systems are not highly interconnected the use of single phase tripping and high speed auto-reclosure is often required. This in turn dictates the need for very high speed protection to reduce overall fault clearance times.

Many line configurations exist which need to be addressed. Transmission applications may typically consist of 2 or 3 terminal applications, possibly fed from breaker and a half or mesh arrangements. Lower voltage applications may again be 2 or 3 terminal configurations with the added complications of in zone transformers or small teed load transformers.

Charging current may also adversely affect protection. This is a problem particularly with cables and long transmission lines. Both the initial inrush and steady state charging current must not cause relay maloperation and preferably should not compromise protection performance.

Physical distance must be taken into account. Some EHV transmission lines can be up to several hundred kilometers in length. If high speed, discriminative protection is to be applied, it will be necessary to transfer information between line ends. This not only puts the onus on the security of signaling equipment but also on the protection in the event of loss of this signal.

Back-up protection is also an important feature of any protection scheme. In the event of equipment failure, such as signaling equipment or switchgear, for example, it is necessary to provide alternative forms of fault clearance. It is desirable to provide back-up protection which can operate with minimum time delay and yet discriminate with both the main protection and protection elsewhere on the system.

Transmission systems are essential to route power from the point of generation to the region of demand. The means of transport is generally via overhead lines, which must have maximum in-service availability. The exposed nature of overhead lines make them fault-prone, and protection devices must trip to initiate isolation of any faulted circuit. In addition to fast fault clearance to prevent plant damage, the requirements for a transmission network must also take into account system stability. Where systems are not highly interconnected the use of single phase tripping and high speed auto-reclosure is often required. This in turn dictates the need for very high speed protection to reduce overall fault clearance times.

The MiCOM P54x provides fast, highly selective protection, to trip for genuine line faults. The current differential principle easily detects intercircuit, evolving and cross country faults amongst others as the relay works on a per phase basis. It is also immune to voltage measurement problems such as CVT transients and power swings on the system and the most important benefit of all; differential principle offers the most selective line protection.

A combination with a full scheme distance protection and aided directional earth fault (DEF) makes the relay a complete and versatile solution for line protection. Differential and distance protection can be set to operate to work separately or simultaneously. Distance can also be set to work upon failure of the relay protection communications. These options allow the user to set different protection schemes such as Differential as main 1 and Distance as main 2 or vice versa, Differential as main 1 and Distance as backup, etc.

Distance protection on MiCOM P54x offers advanced load blinding and disturbance detection techniques such as power swing blocking to ensure stability when no tripping is required. Selectable mho and quadrilateral (polygon) characteristics allow versatile deployment as main protection for all effectively-earthed transmission and distribution circuits, whether lines, cables or hybrid (a mix of part cable, part overhead line).

Back-up protection is also an important feature of any protection scheme. In the event of equipment failure, such as signaling equipment or switchgear, for example, it is necessary to provide alternative forms of fault clearance. It is desirable to provide back-up protection which can operate with minimum time delay and yet discriminate with both the main protection and protection elsewhere on the system.

2. APPLICATION OF INDIVIDUAL PROTECTION FUNCTIONS

The following sections detail the individual protection functions in addition to where and how they may be applied. Worked examples are provided, to show how the settings are applied to the relay.

2.1 Differential protection

2.1.1 Setting of the phase differential characteristic

The characteristic is determined by four protection settings. All of them are user adjustable. This flexibility in settings allows the relay characteristic to be tailored to suit particular sensitivity and CT requirements. To simplify the protection engineer's task, we strongly recommend three of the settings be fixed to:

Is2 = 2.0 pu

k1 = 30% Provides stability for small CT mismatches, whilst ensuring good sensitivity to resistive faults under heavy load conditions

k2 = 150% (2 terminal applications) or 100% (3 terminal applications). Provides stability under heavy through fault current conditions

These settings will give a relay characteristic suitable for most applications leaving only Is1 setting to be decided by the user.

Is1 This is the basic differential current setting which determines the minimum pick-up level of the relay. The value of this setting should be in excess of any mismatch between line ends, if any, and should also account for line charging current, where necessary.

AP

If voltage inputs are connected to the relay, there is a feature to extract the charging current from the measured current before the differential quantity is calculated. In this case, it is necessary to enter the line positive sequence susceptance value. If capacitive charging current is enable, Is1 may be set below the value of line charging current if required, however it is suggested that Is1 is chosen only sufficiently below the charging current to offer the required fault resistance coverage as described here after.

The table below shows some typical steady state charging currents for various lines and cables.

Voltage (kV)	Core formation and spacing	Conductor size in mm^2	Charging current A/km
11 kV Cable	Three-core	120	1.2
33 kV Cable	Three-core	120	1.8
33 kV Cable	Close-trefoil	300	2.5
66 kV Cable	Flat, 127 mm	630	10
132 kV Overhead Line		175	0.22
132 kV Overhead Line		400	0.44
132 kV Cable	Three-core	500	10
132 kV Cable	Flat, 520 mm	600	20
275 kV Overhead Line		2 x 175	0.58
275 kV Overhead Line		2 x 400	0.58
275 kV Cable	Flat, 205 mm	1150	19
275 kV Cable	Flat, 260 mm	2000	24
400 kV Overhead Line		2 x 400	0.85
400 kV Overhead Line		4 x 400	0.98

Voltage (kV)	Core formation and spacing	Conductor size in mm^2	Charging current A/km
400 kV Cable	Flat, 145 mm	2000	28
400 kV Cable	Tref., 585 mm	3000	33

Table 1. Typical cable/line charging currents (UK, 50 Hz)

If capacitive charging current is disable, the setting of Is1 must be set above 2.5 times the steady state charging current. Where charging current is low or negligible, the recommended factory default setting of 0.2 In should be applied.

The tripping criteria can be formulated as:

1. for |Ibias| < Is2,

   |Idiff| > k1.| Ibias| + Is1

2. for |Ibias| > Is2,

   |Idiff| > k2.| Ibias| - (k2 - k1). Is2 + Is1

2.1.2 Relay sensitivity under heavy load conditions

The sensitivity of the relay is governed by its settings and also the magnitude of load current in the system. For a three-ended system, with relays X, Y and Z, the following applies:

AP

$$|I_{diff}| = |(I_X + I_Y + I_Z)|$$

$$|I_{bias}| = 0.5\ (|I_X| + |I_Y| + |I_Z|)$$

Assume a load current of IL flowing from end X to Y and Z. Assume also a high resistance fault of current IF being singly fed from end X. For worst case analysis, we can assume also IF to be in phase with IL:-

$$I_X = I_L + I_F$$

$$I_Y = -yI_L \text{ where } 0<y<1$$

$$I_Z = -(1-y)\ I_L$$

$$|I_{diff}| = |I_F|$$

$$|I_{bias}| = |I_L| + 0.5\ |I_F|$$

Relay sensitivity when |Ibias| < Is2:

For |Ibias| < Is2, the relay would operate if |Idiff| > k1 |Ibias| + Is1

or $|I_F| > k1\ (|I_L| + 0.5\ |I_F|) + Is1$

or $(1 - 0.5\ k1)\ |I_F| > (k1\ |I_L| + Is1)$

or $|I_F| > (k1\ |I_L| + Is1) / (1 - 0.5\ k1)$

For Is1 = 0.2 pu, k1 = 30% and Is2 =2.0 pu, then

1. for |IL| = 1.0 pu, the relay would operate if |IF| > 0.59 pu

2. for |IL| = 1.59 pu, the relay would operate if |IF| > 0.80 pu

If |IF| = 0.80 pu and |I| = 1.59 pu, then |Ibias| = 1.99 pu which reaches the limit of the low percentage bias curve.

Relay sensitivity when |Ibias| > Is2:

For |Ibias| > Is2, the relay would operate if

|Idiff| > k2 |Ibias| - (k2 - k1) Is2 + Is1

or |IF| > k2 (|IL| + 0.5 |IF|) - (k2 - k1) Is2 + Is1

or (1 - 0.5 k2) |IF| > (k2 |IL| - (k2 - k1) Is2 + Is1)

or |IF| > (k2 |IL| - (k2 - k1) Is2 + Is1) / (1 - 0.5 k2)

For Is1 = 0.2 pu, k1 = 30%, Is2 = 2.0 pu and k2 = 100%, then,

1. for |IL| = 2.0 pu, the relay would operate if |IF| > 1.6 pu

2. for |IL| = 2.5 pu, the relay would operate if |IF| > 2.6 pu

Fault resistance coverage:

Assuming the fault resistance, RF, is much higher than the line impedance and source impedance, then for a 33 kV system and 400/1 CT:-

|IF| = (Vph-n /RF) * (1/CT ratio) pu

= (33000 /$\sqrt{3}$)/RF)/400 pu

= 47.63/RF pu

Based on the above analysis, the relay will detect a fault current in excess of 0.59 pu with a load current of 1 pu flowing. The fault resistance would have to be less than 47.63/0.59 = 81 Ω in this case.

With a short time overload current of 2.0 pu, the relay will be able to detect a fault resistance of 47.63/1.6 = 30 Ω or lower.

AP

2.1.3 CT ratio correction (all models)

Ideally, the compensated current values should be arranged to be as close as possible to relay rated current to provide optimum relay sensitivity.

If there is not mismatch between the CTs, the CT correction factor should be set to 1:1.

2.1.4 Transformers in zone applications (P543 & P545 models)

In applying the well established principles of differential protection to transformers, a variety of considerations have to be taken into account. These include compensation for any phase shift across the transformer, possible unbalance of signals from current transformers either side of windings, and the effects of the variety of earthing and winding arrangements. In addition to these factors, which can be compensated for by correct application of the relay, the effects of normal system conditions on relay operation must also be considered. The differential element must restrain for system conditions which could result in maloperation of the relay, such as high levels of magnetizing current during inrush conditions.

In traditional transformer feeder differential schemes, the requirements for phase and ratio correction were met by correct selection of line current transformers. In the P543 and P545, software interposing CTs (ICTs) are provided which can give the required compensation. The advantage of having replica interposing CTs is that it gives the P54x relays the flexibility to cater for line CTs connected in either star or delta, as well as being able to compensate for a variety of system earthing arrangements. The P543 and P545 relays also include a magnetizing inrush restraint facility.

Note: The P544 and P546 relays do not include any of the above features, except CT ratio mismatch compensation, and as such would not be suitable for the protection of in-zone transformer feeders.

On P543 or P545 relays where capacitive charging current compensation is available, there is a setting to select if capacitive charging current compensation is used or if interposing CTs are used.

2.1.4.1 CT ratio correction

In many cases the HV and LV current transformer primary ratings will not exactly match the transformer winding rated currents. The CT correction factor must be set to ensure that the signals to the differential algorithm are correct to guarantee current balance of the differential element under load and through fault conditions. To minimize unbalance due to tap changer operation, current inputs to the differential element should be matched for the mid-tap position. If there is not mismatch between the CTs, the CT correction factor should be set to 1:1.

The compensated current values should be arranged to be as close as possible to relay rated current to provide optimum relay sensitivity

When a Star/Delta software interposing CT is chosen, no additional account has to be taken for the $\sqrt{3}$ factor which would be introduced by the delta winding. This is accounted for by the relay.

2.1.4.2 Phase correction and zero sequence current filtering

Selection of the phase correction settings will be dependant on the phase shift required across the transformer and on zero sequence filtering elements with CT correction factors, the phase correction is applied to each relay. Providing replica interposing CTs in software has the advantage of being able to cater for line CTs connected in either star as well as being able to cater for zero sequence current filtering

To aid selection of the correct setting on the relay menu, some examples of selection of phase compensation factors are shown in the following table:

AP

Transformer connection	Transformer phase shift	Vectorial compensation (relay setting)	
		HV	LV
Dy1	- 30o	Yy0 (0 deg)	Yd11 (+30 deg)
Yd1	- 30o	Yd1 (-30 deg)	Yy0 (0 deg)
Dy5	- 150o	Yy0 (0 deg)	Yd7 (+150 deg)
Yd5	- 150o	Yd5 (-150 deg)	Yy0 (0 deg)
Dy7	+ 150o	Yy0 (0 deg)	Yd5 (-150 deg)
Yd7	+ 150o	Yd7 (+150 deg)	Yy0 (0 deg)
Dy11	+ 30o	Yy0 (0 deg)	Yd1 (-30 deg)
Yd11	+ 30o	Yd11 (+30 deg)	Yy0 (0 deg)
YNyn	0o	Ydy0 (0 deg)	Ydy0 (0 deg)

As shown in the table, a delta winding is introduced with the Y side software interposing CT. This provides the required zero sequence trap, as would have been the case if the vector correction factor had been provided using an external interposing current transformer.

Whenever an in zone earthing connection is provided, a zero sequence trap should always be provided. For instance if a YNyn power transformer is in the protected zone, there will be some difference between HV and LV zero sequence magnetizing current of the transformer. This is normally small, but to avoid any problems with any application the above rule for zero sequence traps should be applied with earthed windings.

2.1.4.3 High set differential setting

When inrush restrain is enabled, a high set differential protection becomes active. This is provided to ensure rapid clearance for heavy internal faults with saturated CTs. Because high set is not restrained by magnetizing inrush, hence the setting must be set such that it will not operate for the largest inrush currents expected. It is difficult to accurately predict the maximum anticipated level of inrush current. Typical waveforms peak values are of the order of 8-10x rated current. A worst case estimation of inrush could me made by dividing the transformer full load current by the per unit leakage reactance quoted by the transformer manufacturer.

2.1.5 Mesh corner and 1½ breaker switched substations

Where a line is fed from a mesh corner or 1½ breaker switched substation, as shown in Figure 1, then two options are available for CT connections to the relay. The first is by paralleling the two sets of line CTs into a common input, 'A'. The second is by using two separate inputs for each set of line CTs, 'B'. The P544 and P546 relays are designed with an additional set of input CTs specifically for this purpose.

In the case of a through fault as shown, the relay connected to circuit 'A' should see no current and as such, will remain stable. Under this condition, it should be noted that no bias is produced in the relay. To ensure relay stability, the two sets of line CTs should be as near as identical in all characteristics, and equally loaded, such that the relaying connection is at the equipotential point of the secondary leads.

In the case of circuit 'B' no differential current should result. A large bias current will however exist, providing a high degree of stability in the event of a through fault. This bias will also ensure stability where CTs are not closely matched. Therefore, circuit 'B' is the preferred connection for such applications and so the P544 and P546 relay models would normally be specified.

AP

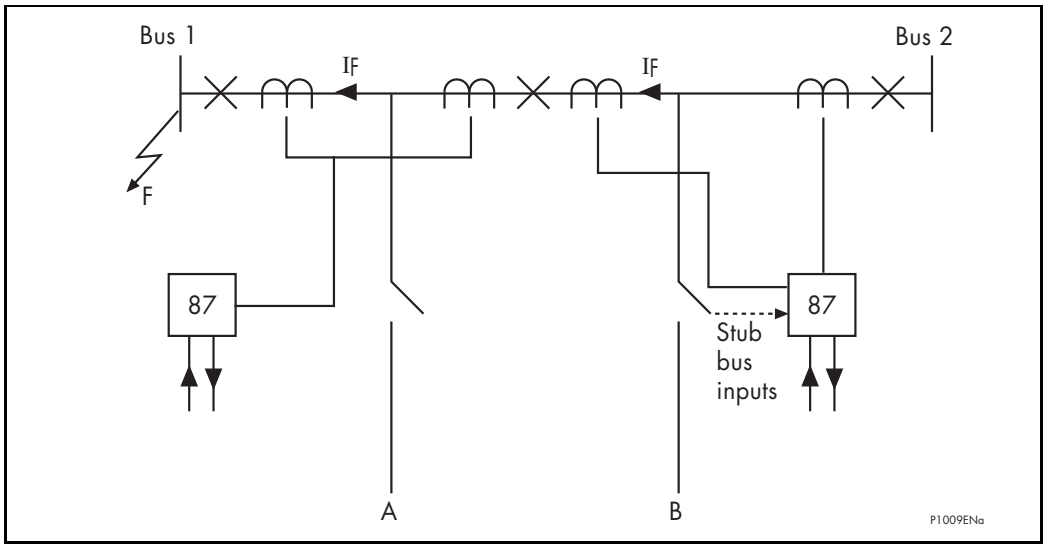

Figure 1 Breaker and a half switched substation

2.1.6 Small tapped loads (tee feeds)

Where transformer loads are tapped off the protected line it is not always necessary to install CTs at this location. Provided that the tee-off load is light, differential protection can be configured for the main line alone. The settings 'Phase Char', 'Phase Time Delay' and 'TMS' or 'Time Dial' in table 3 allow the differential element to time grade with IDMT overcurrent relays or fuses protecting the tap. This keeps stability of the differential protection for external faults on the tee circuit.

2.2 Optional distance protection

The MiCOM P54x has, by ordering option, a comprehensive integrated distance protection package. This comprises :-

- Phase fault distance protection
- Earth/ground fault distance protection
- Power sing detection, alarm, and blocking
- Out-of-step detection and tripping
- Switch on to fault (SOTF) and trip on reclose (TOR)
- Directional Schemes
- Aided schemes

These are described in the following sections and are marked as being applicable to the distance option only. If the distance option is not specified, these will not be applicable, and additional protection will be in the form of overcurrent etc., as described from section 2.6.

2.3 Distance protection and aided DEF (Distance option only)

2.3.1 Simple and advanced setting mode (Distance option only)

AP

To the benefit of user, the MiCOM P54x offers two setting modes for distance protection: "*Simple*" and "*Advanced*". In the majority of cases, "Simple" setting is recommended, and allows the user merely to enter the line parameters such as length, impedances and residual compensation. Then, instead of entering distance zone impedance reaches in ohms, zone settings are entered in terms of **percentage of the protected line**. This makes the relay particularly suited to use along with any installed LFZP Optimho relays, as the reduced number of settings mimics the Autocalc facility within Opticom software.

The "*Advanced*" setting mode is recommended for the networks where the protected and adjacent lines are of dissimilar construction, requiring independent zone characteristic angles and residual compensation. In this setting mode all individual distance ohmic reach and residual compensation settings and operating current thresholds per each zone are accessible. This makes the relay adaptable to any specific application.

2.3.2 Line parameters settings (Distance option only)

It is essential (especially when using the "simple" setting mode) that the data relating to 100% of the protected line is entered here. Take care to input the Line Impedance that correctly corresponds to either Primary or Secondary, whichever has been chosen as the basis for Settings Values in the Configuration column.

2.3.3 Residual compensation for earth/ground faults (Distance option only)

For earth faults, residual current (derived as the vector sum of phase current inputs (Ia + Ib + Ic) is assumed to flow in the residual path of the earth loop circuit. Therefore, the earth loop reach of any zone must generally be extended by a multiplication factor of (1 + kZN) compared to the positive sequence reach for the corresponding phase fault element.

Caution: The kZN Angle is different than previous LFZP, SHNB, and LFZR relays: When importing settings from these older products, subtract. angle $\angle Z_1$.

2.3.4 Mutual compensation for parallel lines (Distance option only)

Typically a mutual cut off factor of 1.5 is chosen to give a good margin of safety between the requirements of correct mutual compensation for faults inside the protected line and eliminating misoperations for faults on the adjacent line.

2.3.5 Selection of distance operating characteristic (Distance option only)

In general, the following characteristics are recommended:

- Short line applications: Mho phase fault and quadrilateral earth fault zones.
- Open delta (vee-connected) VT applications: Mho phase fault, with earth fault distance **disabled**, and directional earth fault only used for earth fault protection.
- Series compensated lines: Recommend **always** to use mho characteristics for both phase and earth faults.

2.3.5.1 Phase characteristic (Distance option only)

This phase characteristic selection is common to all zones, allowing mho or quadrilateral selection. Generally, the characteristic chosen will match the utility practice. If applied for line protection similarly to LFZP Optimho, LFZR, SHNB Micromho or SHPM Quadramho models in the Schneider Electric range, a mho selection is recommended. For cable applications, or to set similarly to the MiCOM P441/442/444 models, a quadrilateral selection is recommended.

Figure 2 shows the basic settings needed to configure a forward-looking mho zone, assuming that the load blinder is enabled. Figure 3 shows the basic settings needed to configure a forward-looking quadrilateral zone (blinder not shown).

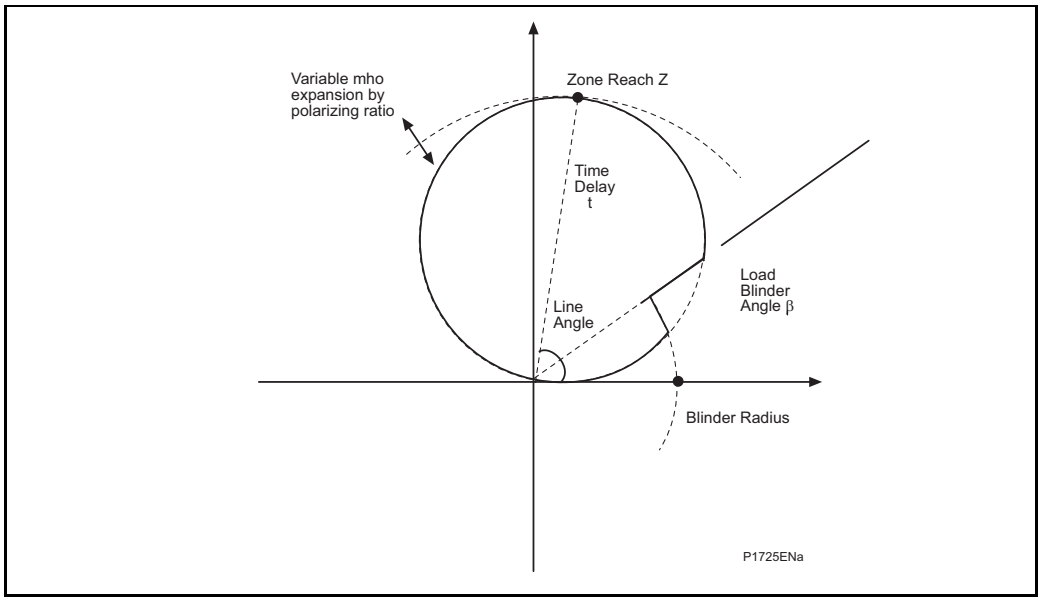

Figure 2 Settings required to apply a Mho zone (Distance option only)

AP

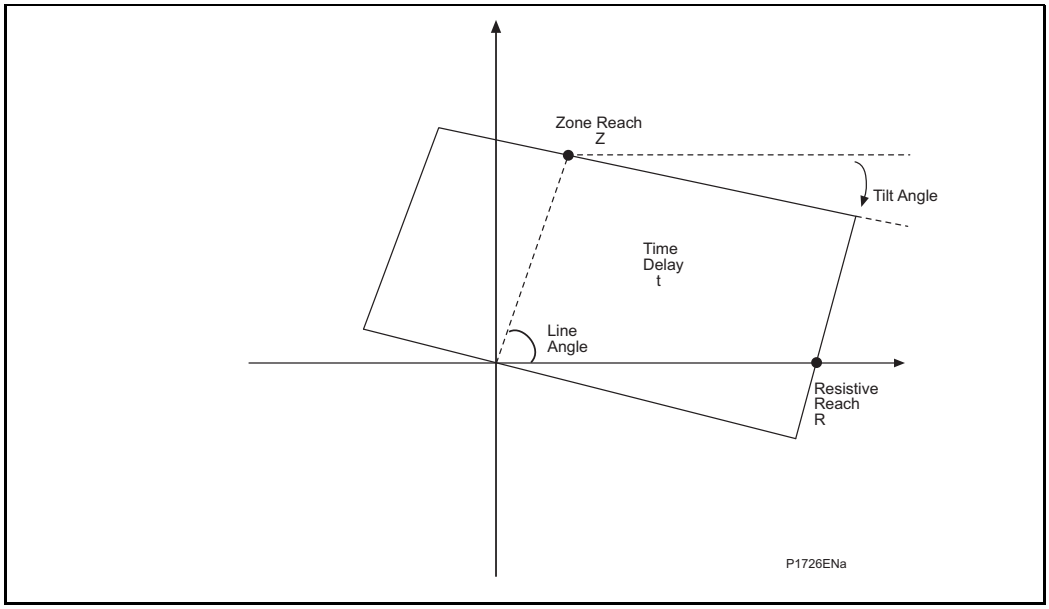

Figure 3 Settings required to apply a quadrilateral zone (Distance option only)

2.3.5.2 Ground characteristic (Distance option only)

AP

In general, the same setting philosophy would be followed for ground distance protection as is used for the phase elements. This selection is common to all zones, allowing mho or quadrilateral selection and generally, the characteristic chosen will match the utility practice. If applied for long and medium length line protection similarly to LFZP Optimho, LFZR, SHNB Micromho or SHPM Quadramho models in the Schneider Electric range, a mho selection is recommended. For cable applications, or to set similarly to the MiCOM P441/442/444 models, a quadrilateral selection is recommended.

Quadrilateral ground characteristics are also recommended for all lines shorter than 10 miles (16 km). This is to ensure that the resistive fault arc coverage is not dependent on mho circle dynamic expansion, but will be a known set value.

2.3.6 Zone reaches - recommended settings (Distance option only)

The Zone 1 elements of a distance relay should be set to cover as much of the protected line as possible, allowing instantaneous tripping for as many faults as possible. In most applications the zone 1 reach (Z1) should not be able to respond to faults beyond the protected line. For an underreaching application the zone 1 reach must therefore be set to account for any possible overreaching errors. These errors come from the relay, the VTs and CTs and inaccurate line impedance data. It is therefore recommended that the reach of the zone 1 distance elements is restricted to 80% of the protected line impedance (positive phase sequence line impedance), with zone 2 elements set to cover the final 20% of the line.

The Zone 2 elements should be set to cover the 20% of the line not covered by zone 1. Allowing for underreaching errors, the zone 2 reach (Z2) should be set in excess of 120% of the protected line impedance for all fault conditions. Where aided tripping schemes are used; fast operation of the zone 2 elements is required. It is therefore beneficial to set zone 2 to reach as far as possible, such that faults on the protected line are well within reach. A constraining requirement is that, where possible, zone 2 does not reach beyond the zone 1 reach of adjacent line protection. For this reason the zone 2 reach should be set to cover ≤50% of the shortest adjacent line impedance, if possible.

The Zone 3 elements would usually be used to provide overall back-up protection for adjacent circuits. The zone 3 reach (Z3) is therefore set to approximately 120% of the combined impedance of the protected line plus the longest adjacent line. A higher apparent impedance of the adjacent line may need to be allowed where fault current can be fed from multiple sources or flow via parallel paths.

Zone 3 may also be programmed with a slight reverse ("rev") offset, in which case its reach in the reverse direction is set as a percentage of the protected line impedance too. This would typically provide back-up protection for the local busbar, where the offset reach is set to 20% for short lines (<30 km) or 10% for longer lines.

Zone P is a reversible directional zone. The setting chosen for Zone P, if used at all, will depend upon its application. Typical applications include its use as an additional time delayed zone or as a reverse back-up protection zone for busbars and transformers. Use of zone P as an additional forward zone of protection may be required by some users to line up with any existing practice of using more than three forward zones of distance protection.

The Zone 4 elements may also provide back-up protection for the local busbar. Where zone 4 is used to provide reverse directional decisions for Blocking or Permissive Overreach schemes, zone 4 must reach further behind the relay than zone 2 for the remote end relay. In such cases the reverse reach should be as below (depends on characteristic used):

Mho: Z4 $\geq$ ((Remote zone 2 reach) x 120%)

Quadrilateral: Z4 $\geq$ ((Remote zone 2 reach) x 120%) minus the protected line impedance

Note: In the case of the mho, the line impedance is not subtracted. This ensures that whatever the amount of dynamic expansion of the circle, the reverse looking zone will always detect all solid and resistive faults capable of detection by zone 2 at the remote line end.

2.3.7 Quadrilateral phase resistive reaches (Distance option only)

Two setting modes are possible for resistive reach coverage:

AP

Common - In this mode, all zones share one common fault resistive reach setting

Proportional - With this mode, the aspect ratio of (zone reach): (resistive reach) is the same for all zones. The "Fault Resistance" defines a reference fault at the remote end of the line, and depending on the zone reach percentage setting, the resistive reach will be at that same percentage of the Fault Resistance set. For example, if the zone 1 reach is 80% of the protected line, its resistive reach will be 80% of the reference "Fault Resistance".

Proportional setting is used to mimic Germanic protection practice, and to avoid zones being excessively broad (large resistive reach width compared to zone reach length). In general, for easiest injection testing, the aspect ratio of any zone is best within the 1 : 15 range:

$$1/15\text{th} \leq Z \text{ reach} / R \text{ reach setting} \leq 15$$

The resistive reach settings (RPh and RG) should be selected according to the utility practice. If no such guidance exists, a starting point for Zone 1 is:

Cables - Choose Resistive Reach = 3 x Zone 1 reach

Overhead lines - Choose Resistive Reach according to the following formula…

Resistive reach = [2.3 - 0.0045 x Line length (km)] x Zone 1 reach

Lines longer than 400 km - Choose: 0.5 x Zone 1 reach

2.3.8 Quadrilateral ground resistive reaches and tilting (Distance option only)

Note: Because the fault current for a ground fault may be limited by tower footing resistance, high soil resistivity, and weak infeeding; any arcing resistance is often higher than for a corresponding phase fault at the same location. It maybe necessary to set the RG ground resistive settings to be higher than the RPh phase setting (i.e. boosted higher than the rule of thumb in the last subsection). A setting of RG three times that of RPh is not uncommon.

The P54x allows two different methods of tilting the top reactance line:

- Automatic adjustment of the top reactance line angle
- Fix setting of the top line that will over-ride dynamic tilting

Both methods are detailed in the Operation chapter.

Dynamic tilting:

Medium/ Long lines:

In the case of medium and long line applications where Quad distance ground characteristic is used, the recommended setting is 'Dynamic tilt' enabled at starting tilt angle of -3° (as per default settings). The -3° is set to compensate for possible CT/VT and line data errors.

For high resistive faults during power exporting, the under-reaching zone 1 is only allowed to tilt down by the angle difference between the faulted phase and negative sequence current ∠(Iph-I2) starting from the –3° set angle. This ensures stability of zone 1 for high resistance faults beyond the zone 1 reach even during heavy load conditions (high load angle between two voltage sources) and sufficient sensitivity for high resistance internal faults. The tilt angle for all other zones (that are by nature over-reaching zones) will remain at -3 deg.

In the case of power importing, zone 1 will remain at –3° whilst all other zones will be allowed to tilt up by the ∠(Iph-I2) angle difference, starting from –3°. This will increase the zone 2 and zone 4 resistive reaches and secure correct operation in POR and blocking type schemes.

Short lines:

For very short lines, typically below 10 Miles (16 km), the ratio of resistive to reactance reach setting (R/X) could easily exceed 10. For such applications the geometrical shape of the Quad characteristic could be such that the top reactance line is close or even crosses the resistive axis as presented in Figure 4

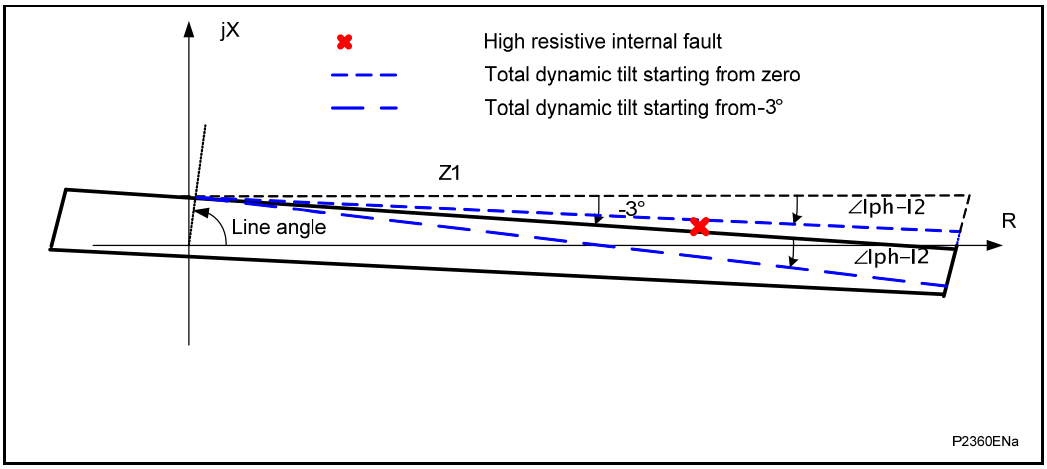

Figure 4 Example of high resistive zone 1 fault that falls outside zone 1 characteristic when the starting tilt angle of -3° is set (over-tilting effect). (Distance option only)

AP

In the case of high resistance external faults on a short line, particularly under heavy power exporting conditions, zone 1 will remain stable due to dynamic downwards tilting of the top line as explained earlier but the detection of high resistance internal faults especially towards the end of the line needs consideration. In such applications a user has a choice to either detect high resistance faults using highly sensitive Aided DEF or Delta Directional schemes or to clear the fault with distance ground protection. If distance is to operate, it is necessary to eliminate over-tilting for internal faults by reducing the initial -3° tilting angle to zero so that the overall top line tilt will equal to $\angle$(Iph-I2) angle only.

As per Figure 4, the internal resistive fault will then fall in the zone 1 operating characteristic. However, it should be noted that for short lines the load angle is relatively low when compared to long transmission lines for the same transfer capacity and therefore the top line dynamic tilting may be moderate. Therefore it may be necessary to reduce the zone one reach to guarantee zone 1 stability. This is particularly recommended if distance is operating in an aided scheme. To summarize, for very short lines with large R/X setting ratios, it is recommended to set the initial tilt angle to zero and zone 1 reach to 70-75% of the line impedance.

Note: The above discussion assumes homogenous networks where the angle of the negative sequence current derived at relaying point is very close to the total fault current angle. If the network is non-homogenous, there will be a difference in angle that will cause inaccurate dynamic tilting, hence in such networks either quad with fixed tilt angle or even Mho characteristic should be considered in order to avoid zone 1 over-reach.

Fixed tilt angle:

AP

As an alternative to Dynamic tilting, a user can set a fixed tilt angle. This is applicable to applications where the power flow direction is unidirectional.

Exporting end:

To secure stability, the tilt angle of zone 1 at exporting end has to be set negative and above the maximum angle difference between sources feeding the resistive faults. This data should be known from load flow study, but if unavailable, the minimum recommended setting would be the angle difference between voltage and current measured at local end during the heaviest load condition coupled with reduced zone 1 reach of 70-75% of the line impedance.

Note: Figure 4 shows that at sharp fixed tilt angle, the effective resistive coverage would be significantly reduced, and therefore for the short lines the dynamic tilting (with variable tilt angle depending on fault resistance and location) is preferred. For all other over-reaching zones set tilting angle to zero.

Importing end:

Set zone 1 tilt angle to zero and for all other zones the typical setting should be positive and between +(5-10)°.

Note: The setting accuracy for over-reaching zones is not crucial because it will not pose a risk for relay's maloperation, the purpose is only to boost zone 2 and zone 4 reach and improve distance aided schemes.

2.3.9 Phase fault zone settings (Distance option only)

Each zone has two additional settings that are not accessible in the Simple set mode. These settings are:

- A tilt angle on the top line of any quadrilateral set for phase faults;
- A minimum current sensitivity setting.

By factory defaults, the Top Line of quadrilateral characteristics is not fixed as a horizontal reactance line. To account for phase angle tolerances in the line CT, VT and relay itself, the line is tilted downwards, at a "droop" of –3°. This tilt down helps to prevent zone 1 overreach.

The fixed ***Tilt*** setting on the phase elements may also be used to compensate for overreach effects when prefault heavy load export was flowing. In such cases, fault arc resistance will be phase shifted on the impedance polar plot, tilting down towards the resistive axis (i.e. not appearing to be fully resistive in nature). For long lines with heavy power flow, the Zone 1 top line might be tilted downwards within the range –5 to –15°, mimicking the phase shift of the resistance.

Note: A minus angle is used to set a downwards tilt gradient, and a positive angle to tilt upwards.

Note: mho characteristics have an inherent tendency to avoid unwanted overreaching, making them very desirable for long line protection, and one of the reasons for their inclusion within the MiCOM P54x relay.

AP

The current ***Sensitivity*** setting for each zone is used to set the minimum current that must be flowing in each of the faulted phases before a trip can occur. It is recommended to leave these settings at their default. The exception is where the relay is made more insensitive to match the lesser sensitivity of older relays existing on the power system, or to grade with the pickup setting of any ground overcurrent protection for tee-off circuits.

2.3.10 Distance directional principle and setup (Distance option only)

2.3.11 Delta directional - selection of RCA (Distance option only)

Distance zones are directionalized by the delta decision. For delta directional decisions, the RCA settings must be based on the average source + line impedance angle for a fault anywhere internal or external to the line. Typically, the **Delta Char Angle** is set to 60°, as it is not essential for this setting to be precise. When a fault occurs, the delta current will never be close to the characteristic boundary, so an approximate setting is good enough.

The 60° angle is associated with mainly inductive sources and will work perfectly well for most applications. However, in series compensated line applications where the capacitor is physically located behind the line VT the Delta directional characteristic angle needs adjusting. In such applications the capacitor is included in the equivalent source impedance and the overall source impedance as seen by the relay will become predominantly capacitive if the inductance of the source (normally strong source) is less than the capacitor value. In this case, the calculated operating angle during an internal fault may not fall within the default 60° delta directional line operating boundary and that could potentially lead to an incorrect (reverse) directional decision. A zero degree shift will be most suitable for such a fault, but the constraining factor is the case of external faults for which the source is always inductive regardless of the degree of compensation and for which the 60° shift is most appropriate. To ensure correct, reliable and fast operation for both fault locations in case of predominantly capacitive source, a **Delta Char Angle** setting of 30° is strongly recommended.

2.3.12 Distance setup - filtering, load blinding and polarizing (Distance option only)

2.3.12.1 Digital filtering (Distance option only)

In most applications, it is recommended that *Standard* filtering is used. This will ensure that the relay offers fast, sub-cycle tripping. In certain rare cases, such as where lines are immediately adjacent to High Voltage DC (HVDC) transmission, the current and voltage inputs may be severely distorted under fault conditions. The resulting non-fundamental harmonics could affect the reach point accuracy of the relay. To prevent the relay being affected, a '*Special*' set of filters are available.

Note: When using the long line filter the instantaneous operating time is increased by about a quarter of a power frequency cycle.

2.3.12.2 CVTs with passive suppression of ferroresonance (Distance option only)

Set a **Passive** CVT filter for any type 2 CVT (those with an anti-resonance design). An SIR cutoff setting needs to be applied, above which the relay operation is deliberately slowed by a quarter of a cycle. A typical setting is SIR = 30, below which the relay will trip sub-cycle, and if the infeed is weak the CVT filter adapts to slow the relay and prevent transient overreach.

2.3.12.3 CVTs with active suppression of ferroresonance (Distance option only)

Set an **Active** CVT filter for any type 1 CVT.

2.3.13 Load blinding (load avoidance) (Distance option only)

AP

For security, it is highly recommended that the blinder is Enabled, especially for lines above 150 km (90 miles), to prevent non harmonic low frequency transients causing load encroachment problems, and for any networks where power swings might be experienced.

The impedance radius must be set lower than the worst-case loading, and this is often taken as 120% overloading in one line, multiplied by two to account for increased loading during outages or fault clearance in an adjacent parallel circuit. Then an additional allowance for measuring tolerances results in a recommended setting typically 1/3rd (or even 1/4th in some countries such as UK) of the rated full load current:

$Z \leq$ (Rated phase voltage Vn)/(I_{FLC} x 3)

When the load is at the worst-case power factor, it should remain below the beta setting. So, if we assume a typical worst-case 0.85 power factor, then:

$\beta \geq \cos^{-1}(0.85)$ plus 15° margin $\geq$ 47°

– And, to ensure that line faults are detected, $\beta \leq$ (Line Angle -15°).

In practice, an angle half way between the worst-case leading load angle, and the protected line impedance angle, is often used.

The MiCOM P54x has a facility to allow the load blinder to be bypassed any time the measured voltage for the phase in question falls below an undervoltage V< setting. Under such circumstances, the low voltage could not be explained by normal voltage excursion tolerances on-load. A fault is definitely present on the phase in question, and it is acceptable to override the blinder action and allow the distance zones to trip according to the entire zone shape. The benefit is that the resistive coverage for faults near to the relay location can be higher.

The undervoltage setting must be lower than the lowest phase-neutral voltage under heavy load flow and depressed system voltage conditions. The typical maximum V< setting is 70% Vn.

2.3.13.1 Recommended polarizing settings (Distance option only)

Cable applications - In line with LFZP123 or LFZR applications for cable feeders, use only minimum 20% (0.2) memory, which results in minimum mho expansion. This keeps the protected line section well within the expanded mho, thereby ensuring better accuracies and faster operating times for close-up faults.

Series compensated lines - Use a mho with maximum memory polarizing (setting = 5). The large memory content will ensure correct operation even with the negative reactance effects of the compensation capacitors seen either within Zs, or within the line impedance.

Short lines - For lines shorter than 10 miles (16 km), or with an SIR higher than 15, use maximum memory polarizing (setting = 5). This ensures sufficient characteristic expansion to cover fault arc resistance.

General line applications - Use any setting between 0.2 and 1.

2.3.14 Distance elements basic scheme setting (Distance option only)

The Zone 1 time delay (tZ1) is generally set to zero, giving instantaneous operation.

AP

The Zone 2 time delay (tZ2) is set to co-ordinate with zone 1 fault clearance time for adjacent lines. The total fault clearance time will consist of the downstream zone 1 operating time plus the associated breaker operating time. Allowance must also be made for the zone 2 elements to reset following clearance of an adjacent line fault and also for a safety margin. A typical minimum zone 2 time delay is of the order of 200 ms.

The Zone 3 time delay (tZ3) is typically set with the same considerations made for the zone 2 time delay, except that the delay needs to co-ordinate with the downstream zone 2 fault clearance. A typical minimum zone 3 operating time would be in the region of 400 ms.

The Zone 4 time delay (tZ4) needs to co-ordinate with any protection for adjacent lines in the relay's reverse direction.

Note (1): The MiCOM P54x allows separate time delays to be applied to both phase and ground fault zones, for example where ground fault delays are set longer to time grade with external ground/earth overcurrent protection.

Note (2): Any zone ("#") which may reach through a power transformer reactance, and measure secondary side faults within that impedance zone should have a small time delay applied. This is to avoid tripping on the inrush current when energizing the transformer. As a general rule, if: Z# Reach $_{setting}$ > 50% X_T transformer reactance, set: tZ# ≥ 100 ms. Alternatively, the 2nd harmonic detector that is available in the Programmable Scheme Logic may be used to block zones that may be at risk of tripping on inrush current. Settings for the inrush detector are found in the SUPERVISION menu column.

Figure 5 shows the typical application of the Basic scheme.

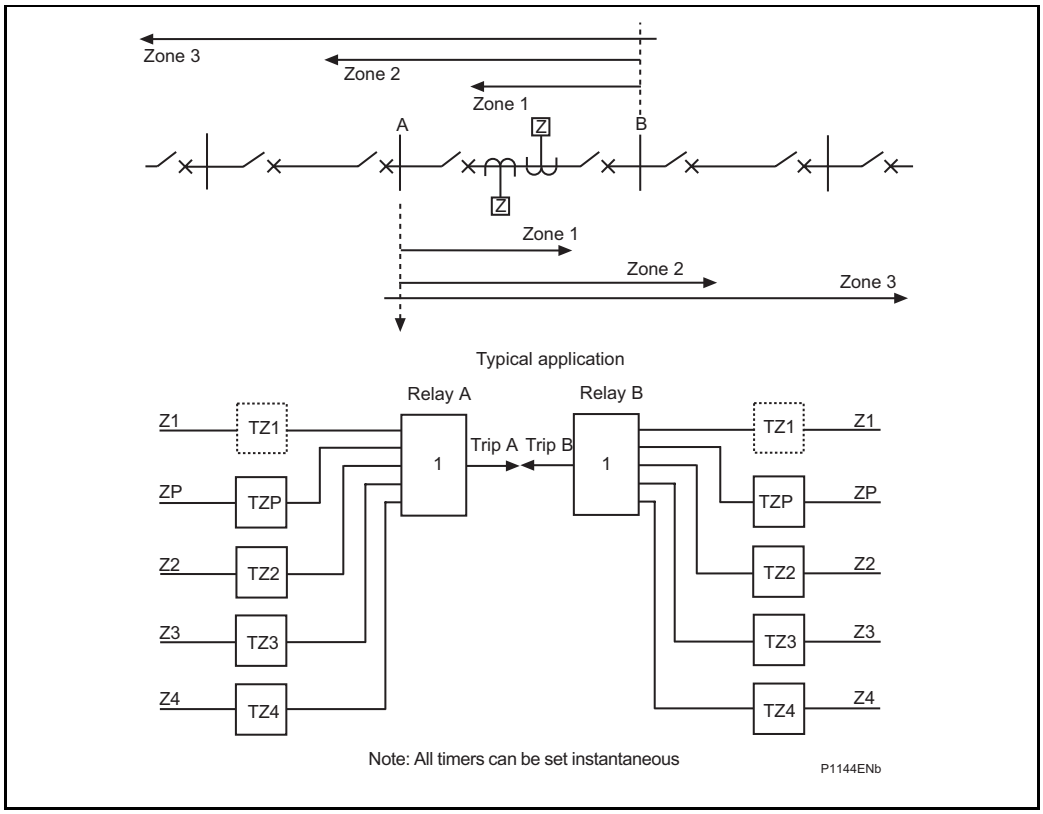

Figure 5 Basic time stepped distance scheme (Distance option only)

AP

2.3.15 Power swing alarming and blocking (Distance option only)

The PSB technique employed in the MiCOM P54x has the significant advantage that it is adaptive and requires no user-set thresholds in order to detect swings faster than 0.5 Hz. The PSB relies on the delta techniques internal to the relay, which automatically detect swings. During the power oscillations slower than 0.5 Hz the continuous ΔI phase current integral to the detection technique for swing conditions may fall below the sensitive threshold of ΔI=0.05 In therefore may not operate. These slow swings will usually occur following sudden load changes or single pole tripping on the weaker systems where the displacement of initial power transfer is not severe. The slow swings of up to 1 Hz are by its nature recoverable swings but the swing impedance may stay longer inside the distance characteristics until the oscillations are damped by the power system. Therefore, to guarantee system stability during very slow swings it is recommended to set a blinder to complement the automatic, setting free detection algorithm. Zone 5 is used as a blinder for slow swing detection as well as for the Out of Step (OST) protection described in the next section. Zone 5 settings are therefore visible even if OST protection is disabled. The slow swing condition will be declared if positive sequence impedance is detected inside zone 5 for more than a cycle without phase selection operation. The slow swing detection operates in parallel to automatic swing detection mechanism.

No system calculation is needed for zone 5 setting, it is only important to set zone 5 smaller than the minimum possible load impedance with a security margin:

In case the OST is enabled the R5, R5', Z5 and Z5' settings will be adequate for very slow swing detection. If, however, the OST protection is disabled, set:

R5=R5'=0.85 x Z<

Z5=Z5'=2 x Zline

where Z< is load blinder radius determined in the 2.3.13 Section.

The user decides which zones are required to be blocked.

Two timers are available:

The *PSB Reset Delay* is used to maintain the PSB status when ΔI naturally is low during the swing cycle (near the current maxima and minima in the swing envelope). A typical setting of 0.2 s is used to seal-in the detection until ΔI has chance to appear again.

The *PSB Unblock Dly* is used to time the duration for which the swing is present. The intention is to allow the distinction between a stable and an unstable swing. If after the timeout period the swing has still not stabilized, the block for selected zones can be released ("unblocking"), giving the opportunity to split the system. If no unblocking is required at the location of this relay, set to maximum (10 s).

PSB can be disabled on distribution systems, where power swings would not normally be experienced.

2.3.16 Out of step protection (Distance option only)

AP

P54x provides an integrated Out of Step protection, therefore avoiding a need for a separate stand alone Out of Step relays. Unlike the power swing detection, the Out of Step protection requires settings and is completely independent from the setting free Power swing detection.

This section provides a discussion and a guidance of how to set the Out of Step protection.

Settings based on system studies must be applied when 'Predictive OST' operation mode is selected as the high setting accuracy is needed to avoid premature system splitting in the case of severe power oscillations that do not lead to pole slip conditions. For the 'OST' setting the same method may be used but an exhaustive stability study may not be required as it will be shown later that the total system impedance ZT and system split points are adequate to set the relay for this scenario.

The MiCOM P54x Out of Step protection can operate as a stand alone protection, i.e. Distance protection may be completely disabled under Configuration column.

2.3.17 Critical stability angle (Distance option only)

What is the angle between two ends when a power system oscillation could be declared as a pole slip?

Consider the power angle curves as in Figure 6.

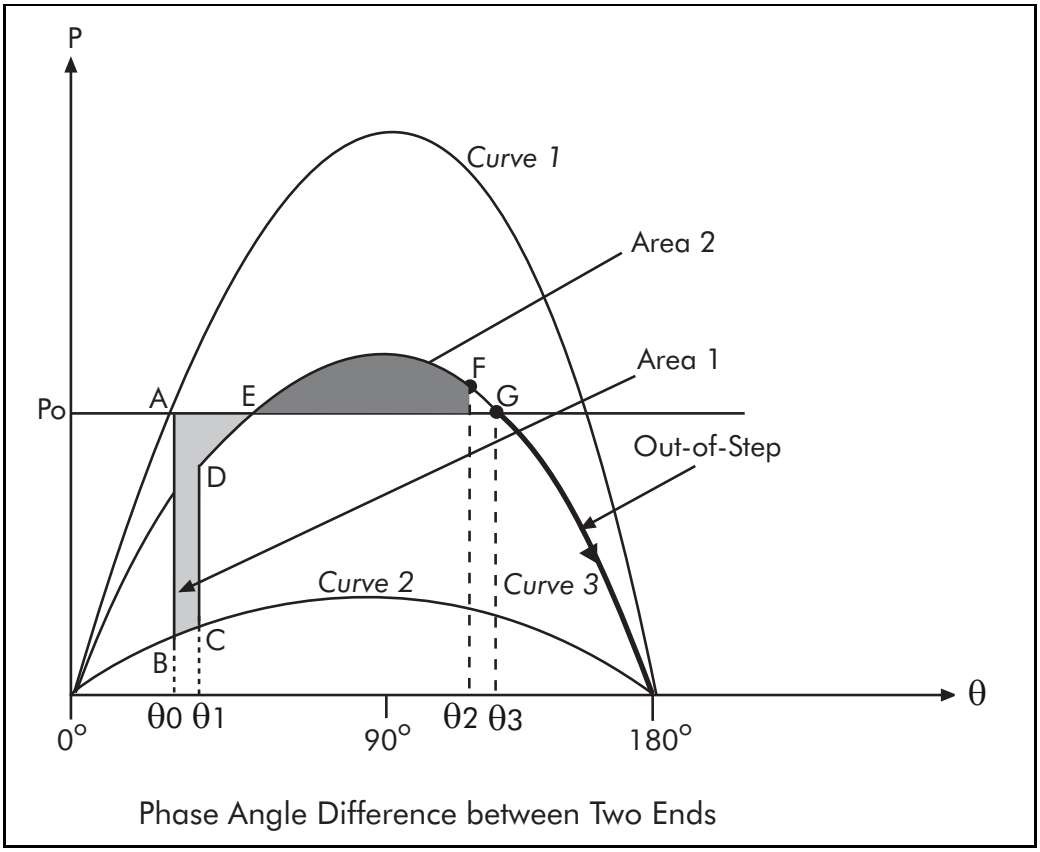

Figure 6 Power transfer in relation to angle difference θ between 2 ends

The figure above represents power angle curves, with no AR being performed, as follows:

Curve 1 - Pre-fault system operation via parallel lines where transmitted power is Po

Curve 2 - Transmitted power significantly reduced during two-phase to ground fault

Curve 3 - New power curve when the parallel line is tripped (fault cleared)

It can be seen that at a fault instance, the operating point A moves to B, with a lower transfer level. There is therefore a surplus of power ΔP=AB at the sending end and the corresponding deficit at the receiving end. The sending end machines start to speed up, and the receiving end machines to slow down, so phase angle θ increases, and the operating point moves along curve 2 until the fault is cleared, when the phase angle is θ1. The operating point now moves to point D on curve 3 which represents one line in service. There is still a power surplus at the sending end, and deficit at the receiving end, so the machines continue to drift apart and the operating point moves along curve 3. If, at some point between E and G (point F) the machines are rotating at the same speed, the phase angle will stop increasing. According to the Equal Area Criterion, this occurs when area 2 is equal to area 1. The sending end will now start to slow down and receiving end to speed up. Therefore, the phase angle starts to decrease and the operating point moves back towards E. As the operating point passes E, the net sending end deficit again becomes a surplus and the receiving end surplus becomes a deficit, so the sending end machines begin to speed up and the receiving end machines begin to slow down. With no losses, the system operating point would continue to oscillate around point E on curve 3, but in practice the oscillation is dumped, and the system eventually settles at operating point E.

To resume, if area 1<area 2, the system will stay in synchronism. This swing is usually called a recoverable power swing. If, on contrary, the system passes point G with a further increase in angle difference between sending and receiving ends, the system drifts out of synchronism and becomes unstable. This will happen if the initial power transfer Po was set too high in Figure 6, so that the area 1 is greater than area 2. This power swing is not recoverable and is usually called **out of step** or **out of synchronism** or **pole slip** condition. After this, only system separation and re-synchronizing of the machines can restore normal system operation.

In Figure 6, the point G is shown at approximately 120° deg, but it is not true in all cases. If, for example the pre-fault transmitted power (Po) was too high and if the fault clearance was slow, the area 1 will be greater so for the system to recover the angle θ would be close to 90 deg. On contrarily, if the pre-fault transmitted power Po was low and fault clearance fast, the area 1 will be small, so that based on area comparison, the angle θ could go closer to 180 deg and the system will still remain stable.

The actual angle difference at which system will become unstable could only be determined by a particular system studies, but for the purpose of settings recommendation where 'OST' setting is selected, the typical angle beyond which system will not recover is assumed to be 120 deg.

2.3.17.1 Setting option recommendation (Distance option only)

The relay provides 4 different setting options:

1. Disabled
2. Predictive OST
3. OST
4. Predictive OST or OST

AP

Set **Option 1** on all lines except the line where tripping due to unrecoverable power oscillations is required or for the system where power oscillations are not severe - mainly in well interconnected systems operating with 3 phase tripping.

Setting **Option 2** (and 4) is the best setting option from the system point of view, perhaps not being widely used in the past. Some utilities prefer an early system split to minimize the angle shift between ends and maximize the chances for the remaining two halves to stabilize as quickly as possible. Special care must be taken when this method is applied to ensure that the actual circuit breaker opening does not occur when the internal voltages at two ends are in anti phase. This is due to the fact that most breakers are not designed to interrupt at double nominal voltage and any attempt to break at that point would lead to flash over and possible circuit breaker damage. The fact is that setting Option 2 (and 4) will be mainly applied do detect and trip fast power oscillations. When this is coupled with a typical 2 cycle circuit breaker operating time, the two voltages angles may rapidly move in opposite directions at the time of opening the circuit breaker. Therefore, if this setting option is chosen, the above facts must be taken into account so that the actual CB opening must occur well before the angle difference between two ends approaches 180 degrees. On that basis, accurate settings have to be determined based on exhaustive system studies.

Setting **Option 3** is the most commonly used approach. Once the Out of Step conditions are detected, the OST command will split the system at pre-determined points. The slight disadvantages of this method in comparison to Option 2 (and 4) is that the power oscillation will escalate further, thus causing more difficulties for the split parts to remain stable but the advantage is that the timing of the circuit breaker operation ('tripping angle') is easily controlled and the decision to split the system will be correct even if errors were made in the system data and setting parameters. This extra security is achieved by measuring and confirming the change of polarity of the resistive part of positive sequence impedance on zone 5 exit (reset).

Setting **Option 4** provides 2 stages of Out of Step detection and tripping. If the power system oscillation is very fast, the combination of ΔR and Delta t setting (as discussed below) must be set in such a way that 'Predictive OST' operates. If however the oscillation is slower, the condition for the 'Predictive OST' will not be met and the 'OST' will operate later upon Z5 reset, providing that the change in polarity of the resistive component was detected. This is to distinguish between a slower non-recoverable oscillation and recoverable swings.

2.3.17.2 Blinder limits determination (Distance option only)

Consider the Out of Step characteristic versus angle θ between two ends.

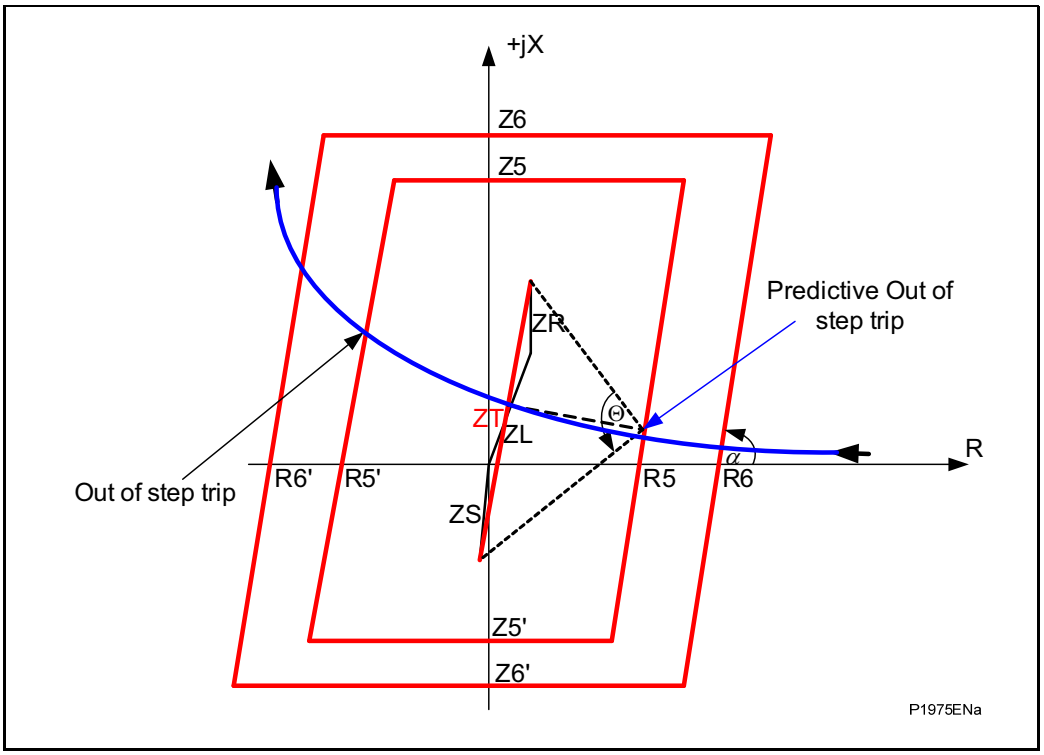

Figure 7 Setting determination for the positive sequence resistive component R5 (Distance option only)

Firstly, determine the minimum inner resistive reach R5.

Figure 7 shows:

$$R5\min = \frac{\frac{ZT}{2}}{\tan \Theta/2},$$

Where ZT is a total system positive sequence impedance that equals to ZS + ZL + ZS, where ZS and ZR are equivalent positive sequence impedances at the sending and receiving ends and ZL positive sequence line impedance. 'θ' is an angle difference between the internal voltages at sending and receiving ends beyond which no system recovery is possible.

The next step is to determine the maximum (limit value) for the outer resistive reach R6. It must be insured that Point A in Figure 8 does not overlap with the load area for the worst assumed power factor of 0.85 and the lowest possible ZT angle α.

AP

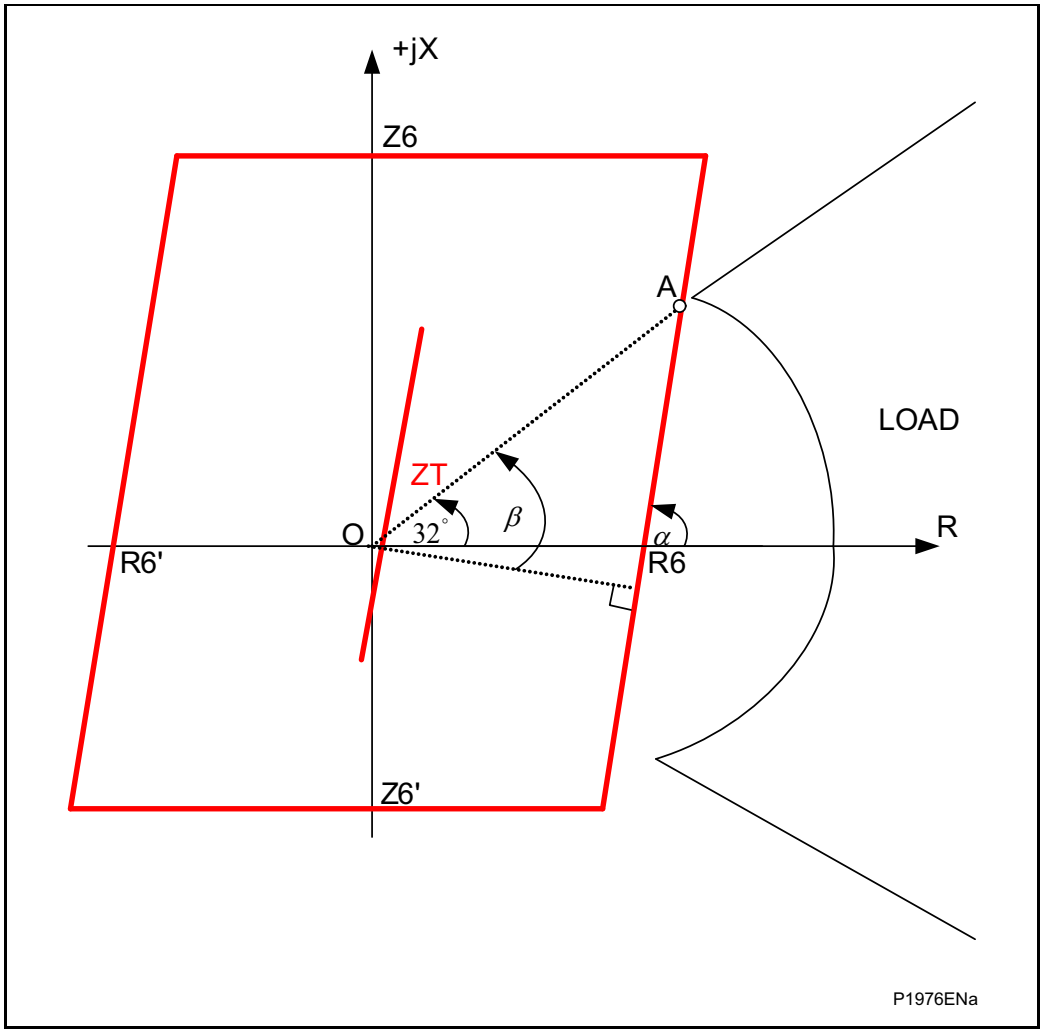

Figure 8 $R6_{MAX}$ determination (Distance option only)

β = 32 + 90 – α

Z load min = OA

R6MAX < Zload min x cos β

Where:

- Zload min is the minimum load impedance radius calculated above which already has built in sufficient margin
- 32 deg is the load angle that corresponds to the lower power factor of 0.85
- 'α' is the load blinder angle that matches ZT angle

The setting of negative resistance R5' should equal the R5 to accommodate the 'load import' condition. Starting from the limit values $R5_{MIN}$ and $R6_{MAX}$ the actual R5 and R6 (including the corresponding R5' and R6') reaches will be set in conjunction with the 'Delta t' setting below.

Note: $R6_{MAX}$ reach must be greater than the maximum resistive reach of any distance zone to ensure correct initiation of the 25 ms and 'Delta t' timers. However, the $R5_{MIN}$ reach could be set below the distance maximum resistive reach (inside the distance characteristic) if an extensive resistive coverage is required, meaning that Out of Step protection does not pose a restriction to the quad applications.

AP

Setting of reactance lines Z5 and Z6 will depend on how far from the relay location the power oscillations are to be detected. Normally, there is only one point where the system is to be initially split and that point will be determined by system studies. For that reason, the Out of Step protection must be enabled at that location and disabled on all others. To detect the Out of step conditions, the Z5'-Z5 and Z6'-Z6 setting must be set to comfortably encompass the total system impedance ZT, as shown in Figure 7. Typical setting could be:

Z5 = Z5' = 1/2 x 2 ZT = ZT

The Z6 and Z6' setting is not of great importance and could be set to Z6 = Z6' = 1.1 x Z5

2.3.17.3 Delta t, R5 and R6 setting determination (Distance option only)

The $R5_{MIN}$ and $R6_{MAX}$ settings determined above are only limit values, the actual R5 and R6 need to be determine in relation to the 'Delta t' timer.

Predictive OST setting:

For the 'Predictive OST' setting it is important to:

- Set R6 (and R6') equal to $R6_{MAX}$
- Set R5 as close as practical to $R6_{MAX}$

The aim of pushing the R5 setting to the right is to detect the fast oscillation as soon as possible to gain sufficient time to operate the breaker before the two source voltages are in opposite direction. The only restriction would be the limitation of the 'Delta t' minimum time delay of 30 ms and the speed of oscillation. Set 'Delta t' so that the following condition is satisfied:

'Delta t' does not expire after positive sequence impedance has passed the R6-R5 region

For this setting, knowledge of the accurate rate of change of swing impedance when crossing the R6-R5 region is essential and therefore must be based on system studies.

Assumption that the rate of change of the positive sequence impedance during crossing the R6-R5 region is average rate of change for the whole swing cycle is wrong and could easily lead to incorrect 'Predictive OST' operation.

Note: For the fault, the R6-R5 region will be passed faster than 25 ms, therefore even very fast oscillations of 7 Hz will not be mistaken with the fault condition and 'Predictive OST' will not operate.

OST setting:

For the 'OST' setting option the precise setting of blinders and 'Delta t' is not necessary. This is based on the fact that:

The wider the ΔR region and the shorter the Δt setting, any oscillation will be successfully detected. The only condition is that the fault impedance must pass through the ΔR region faster than Δt setting.

Therefore, for the 'OST' setting assume that θ = 120° and set:

- R5 = R5' = $R5_{MIN}$ = ZT/3.46
- R6 = R6' = $R6_{MAX}$
- Delta t = 30 ms

The point is that 'Delta t' always expires, therefore the above setting will secure the detection of a wide range of oscillations, starting from very slow oscillations caused by recoverable swings up to the fastest oscillation of 7 Hz. It should be noted that any fault impedance will pass the R6-R5 region faster than the minimum settable 'Delta t' time of 30 ms.

Predictive OST or OST setting:

As per 'Predictive OST' above.

2.3.17.4 Tost (trip delay) setting (Distance option only)

Tost must be set zero for setting Option 2 and 4 above.

For setting Option 3, Tost should normally be set to zero. It is only the case if a user wants to operate breaker at the angle closer to 360 degrees (when voltages are in phase) when time delay could be applied.

2.3.17.5 Blinder angle setting (Distance option only)

Set blinders angle 'α' same as total system impedance ZT angle.

2.3.17.6 Out of step operation on series compensated lines (Distance option only)

The maximum phase currents during out of step condition rarely exceed 2xIn RMS, which corresponds to the minimum swing impedance passing through zone 1. Since the Metal-Oxide Varistors (MOV) bypass level is normally set between 2-3In, they will not operate during the power oscillations and therefore in majority of applications will not make any impact on Out of Step operation.

Consider a worst case scenario when the power oscillations are triggered upon fault clearance on the parallel line. In that case approximately twice the load current will start flowing through the remaining circuit, increase further and eventually exceed the MOV threshold. Since the R6-R5 region is usually set far from zone 1 the chances that the positive sequence impedance's trajectory may traverse in and out of the set ΔR region due to MOV's operation, are remote. If MOV's do operate within the ΔR region (see Figure 9), a timer, that has been initiated, may reset and be re-initiated or the impedance may remain within ΔR region for a slightly longer duration. This is due to the fact that resistive and capacitive components will be added to the measured impedance during MOV operation as per Figure 9. This effect may have an impact on the 'Delta t' measurement if 'Predictive OST' setting is used. If the recommendation to set $R5_{MIN}$ as close as practically possible to the $R6_{MAX}$ is followed, the chances that the swing currents will exceed MOV threshold within the ΔR region is very remote. If a study shows that the MOV's could operate within the ΔR region, it is recommended to set 'Predictive OST and OST' operating mode to cover all eventualities.

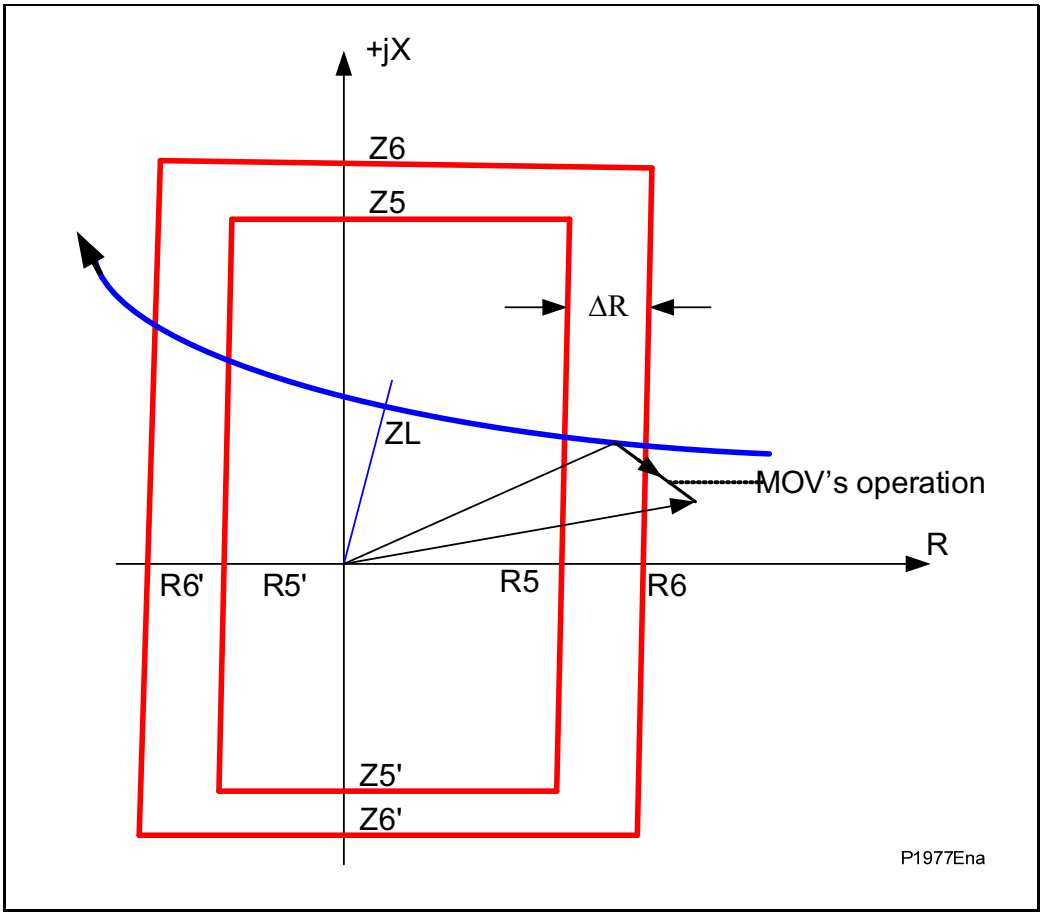

Figure 9 Example of timer reset due to MOV's operation

Note: If 'OST' setting is chosen, the timer when triggered, will eventually expire as the power oscillations progress, therefore MOV operation will not have any impact on Out of Step operation.

2.3.18 Switch on to fault (SOTF) and trip on reclose (TOR) (Distance option only)

2.3.19 Switch onto fault mode (Distance option only)

To ensure fast isolation of faults (for example a closed three phase earth/grounding switch) upon energization, it is recommended this feature is enabled with appropriate zones and/or 'Current No Volt' (CNV) level detectors, depend on utility practices.

When busbar VTs are used, 'Pole Dead' signal will not be produced and a user has to connect circuit breaker auxiliary contacts for correct operation. This is not necessary if the SOTF is activated by an external pulse.

<u>SOTF delay</u> - The time chosen should be longer than the slowest delayed-auto-reclose dead time, but shorter than the time in which the system operator might re-energize a circuit once it had opened/tripped. 110 seconds is recommended as a typical setting.

<u>SOTF pulse</u> - Typically this could be set to at 500 ms. This time is enough to establish completely the voltage memory of distance protection.

<u>TOC reset delay</u> - 500 ms is recommended as a typical setting (chosen to be in excess of the 16 cycles length of memory polarizing, allowing full memory charging before normal protection resumes).

AP

2.3.20 Trip on reclose mode (Distance option only)

To ensure fast isolation of all persistent faults following the circuit breaker reclosure. It is recommended this feature is enabled with appropriate zones selected and/or 'Current No Volt' (CNV) level detectors.

TOC Delay - the TOR is activated after 'TOC Delay' has expired. The setting must not exceed the minimum AR Dead Time setting to make sure that the TOR is active immediately upon reclose command.

TOC reset delay - 500 ms is recommended as a typical setting (as per SOTF).

2.3.21 Setup of DEF (Distance option only)

DEF zero sequence polarization

In practice, the typical zero sequence voltage on a healthy system can be as high as 1% (i.e.: 3% residual), and the VT error could be 1% per phase. A *VNpol Set* setting between 1% and 4%.Vn is typical, to avoid spurious detection on standing signals. The residual voltage measurement provided in the **Measurements** column of the menu may assist in determining the required threshold setting during commissioning, as this will indicate the level of standing residual voltage present. The Virtual Current Polarizing feature will create a VNpol which is always large, regardless of whether actual VN is present.

With DEF, the residual current under fault conditions lies at an angle lagging the polarizing voltage. Hence, negative characteristic angle settings are required for DEF applications. This is set in cell 'DEF Char Angle' in the relevant earth fault menu.

AP

The following angle settings are recommended for a residual voltage polarized relay:-

Distribution systems (solidly earthed) ⇒ -45°

Transmissions systems (solidly earthed) ⇒ -60°

2.3.22 DEF negative sequence polarization (Distance option only)

For negative sequence polarization, the RCA settings must be based on the angle of the upstream negative phase sequence source impedance. A typical setting is -60°.

2.3.23 General setting guidelines for DEF (directional ground overcurrent) (Distance option only)

DEF forward threshold - This setting determines the current sensitivity (trip sensitivity) of the DEF aided scheme. This setting must be set higher than any standing residual current unbalance. A typical setting will be between 10 and 20% In.

DEF reverse threshold - This setting determines the current sensitivity for the reverse ground fault. The setting must always be below the DEF forward threshold for correct operation of Blocking scheme and to provide stability for current reversal in parallel line applications. The recommended setting is 2/3 of DEF forward setting. Note that this setting has to be above the maximum steady state residual current unbalance.

2.3.24 Delta directional comparison principle and setup (Distance option only)

For delta directional decisions, the RCA settings must be based on the average source + line impedance angle for a fault anywhere internal or external to the line. Typically, the **Delta Char Angle** is set to 60°, as it is not essential for this setting to be precise. When a fault occurs, the delta current will never be close to the characteristic boundary, so an approximate setting is good enough.

2.3.25 Delta directional comparison - selection of ΔI and ΔV threshold (Distance option only)

For best performance, it is suggested that the delta I Fwd current threshold is set at 10 to 20% In. This will ensure detection of all fault types, provided that the fault current contribution to an earth fault at the remote end of the line will generate at least this amount of delta. Selection of the correct Delta V Forward setting is achieved with reference to the following table (SIR = Source to Line impedance ratio):

Lowest SIR ratio of the system	Recommended ΔV Fwd (as a % of Vn)
≥ 0.3	4%
≥ 0.5	6%
≥ 1	9%
≥ 2	13%
≥ 3	15%
≥ 5	17%
≥10	19%
25 – 60	21%

For the reverse fault detectors, these must be set more sensitively, as they are used to invoke the blocking and current reversal guard elements. It is suggested that all reverse detectors are set at 66 to 80% of the setting of the forward detector, typically:

- Delta V Rev = Delta V Fwd x 0.66
- Delta I Rev = Delta I Fwd x 0.66

This setting philosophy is in-accordance with the well-proven Schneider Electric LFDC relay.

Deltas by their nature are present only for 2 cycles on fault inception. If any distance elements are enabled, these will automatically allow the delta forward or reverse decisions to "seal-in", until such time as the fault is cleared from the system. Therefore, as a minimum, some distance zone(s) must be enabled as fault detectors. It does not matter what time delay is applied for the zone(s) – this can either be the typical distance delay for that Zone, or set to maximum (10 s) if no distance tripping is required. As a minimum, Zone 3 must be enabled, with a reverse reach such as to allow seal-in of Delta Rev, and a forward reach to allow seal-in of Delta Fwd. The reaches applicable would be:

- Zone 3 Forward - Set at least as long as a conventional Zone 2 (120-150% of the protected line)
- Zone 3 Reverse - Set at least as long as a conventional Zone 4, or supplement by assigning Zone 4 itself if a large reverse reach is not preferred for Zone 3.

A mho characteristic is generally advised in such starter applications, although quadrilaterals are acceptable. As the mho starter is likely to have a large radius, applying the Load Blinder is strongly advised.

2.4 Channel aided schemes (Distance option only)

The MiCOM P54x offers two sets of aided channel ("pilot") schemes, which may be operated in parallel.

Aided Scheme 1 - May be keyed by distance and/or DEF and/ or delta directional comparison

Aided Scheme 2 - May be keyed by distance and/or DEF and/ or delta directional comparison

When schemes share the same channel, the same generic scheme type will be applied - i.e. ALL Permissive Overreach, or ALL Blocking.

2.4.1 Distance scheme PUR - permissive underreach transfer trip (Distance option only)

This scheme is similar to that used in the LFZP Optimho, SHNB Micromho, LFZR, and MiCOM P44x (note 1) distance relays. (Note 1: matches PUP Z2 mode in P441/442/444). It allows an instantaneous Z2 trip on receipt of the signal from the remote end protection.

Send logic: Zone 1

Permissive trip logic: Zone 2 plus Channel Received

The "Dist dly" trip time setting should be set to Zero, for fast fault clearance.

2.4.2 Distance scheme POR - permissive overreach transfer trip (Distance option only)

AP

This scheme is similar to that used in the LFZP Optimho, SHNB Micromho, LFZR, and MiCOM P44x (note 2) distance relays. (Note 2: matches POP Z2 mode in P441/442/444, and POR2 scheme in LFZP/LFZR). Note that the POR scheme also uses the reverse looking zone 4 of the relay as a reverse fault detector. This is used in the current reversal logic and in the optional weak infeed echo feature.

Send logic: Zone 2

Permissive trip logic: Zone 2 plus Channel Received

The "Dist dly" trip time setting should be set to Zero, for fast fault clearance.

2.4.3 Permissive overreach trip reinforcement (Distance option only)

The send logic in the POR scheme is done in such a way that for any trip command at the local end, the relay sends a channel signal to the remote end(s) in order to maximize the chances for the fault to be isolated at all ends.

Note: The send signal is generated by the 'Any trip' command and is sent on both channels, Ch1 and Ch2, if more than one channel is in use. This feature is termed **permissive trip reinforcement**, and is a deliberate attempt to ensure that synchronous tripping occurs at all line ends.

2.4.4 Permissive overreach scheme weak infeed features (Distance option only)

Where weak infeed tripping is employed, a typical voltage setting is 70% of rated phase-neutral voltage. Weak infeed tripping is time delayed according to the **WI Trip Delay** value, usually set at 60 ms.

2.4.5 Distance scheme BLOCKING (Distance option only)

To allow time for a blocking signal to arrive, a short time delay on aided tripping, “Dist dly”, **must** be used, as follows:

Recommended Dly setting = Max. Signaling channel operating time + 1 power frequency cycle.

This scheme is similar to that used in the LFZP Optimho, SHNB Micromho, LFZR, and MiCOM P44x (note 3) distance relays. (Note 3: matches BOP Z2 mode in P441/442/444).

Send logic: Reverse Zone 4

Trip logic: Zone 2, plus Channel NOT Received, delayed by Tp

Note: Two variants of a Blocking scheme are provided, Blocking 1 and Blocking 2. Both schemes operate identically, except that the reversal guard timer location in the logic changes. Blocking 2 may sometimes allow faster unblocking when a fault evolves from external to internal, and hence a faster trip.

2.4.6 Permissive overreach schemes current reversal guard (Distance option only)

The recommended setting is:

tREVERSAL GUARD = Maximum signaling channel reset time + 35 ms.

2.4.7 Blocking scheme current reversal guard (Distance option only)

AP

The recommended setting is:

- Where Duplex signaling channels are used:

  tREVERSAL GUARD = Maximum signaling channel operating time + 20 ms.

- Where Simplex signaling channels are used:

  tREVERSAL GUARD = Maximum signaling channel operating time - minimum signaling channel reset time + 20 ms.

2.4.8 Aided DEF ground fault scheme - permissive overreach (Distance option only)

This POR scheme is similar to that used in all other Schneider Electric relays.

Send logic: IN> Forward pickup

Permissive trip logic: IN> Forward plus Channel Received

Note: The Time Delay for a permissive scheme aided trip would normally be set to zero.

2.4.9 Aided DEF ground fault scheme - blocking (Distance option only)

This scheme is similar to that used in all other Schneider Electric relays.

Send logic: DEF Reverse

Trip logic: IN> Forward, plus Channel NOT Received, with a small set delay

To allow time for a blocking signal to arrive, a short time delay on aided tripping **must** be used. The recommended Time Delay setting = max. Signaling channel operating time + 20 ms.

2.4.10 Delta scheme POR - permissive overreach transfer trip (Distance option only)

This scheme is similar to that used in the LFDC relay.

Send logic: Δ Fault Forward

Permissive trip logic: Δ Fault Forward plus Channel Received.

The Delta Delay trip time setting should be set to zero, for fast fault clearance.

2.4.11 Delta blocking scheme (Distance option only)

This scheme is similar to that used in the LFDC relay.

Send logic: Δ Fault Reverse

Trip logic: Δ Fault Forward, plus Channel NOT Received, delayed by Tp.

Recommended Dly setting = Max. signaling channel operating time + 6 ms.

2.4.12 Delta schemes current reversal guard timer (Distance option only)

Similarly to the distance protection schemes, current reversals during fault clearance on an adjacent parallel line need to be treated with care. In order to prevent misoperation (mal-tripping) of the protection on the unfaulted line, a current reversal guard timer must be set. The recommended setting for both POR and BLOCKING schemes is:

tREVERSAL GUARD = Maximum signaling channel reset time + 35 ms

2.5 Loss of load accelerated tripping (LoL) (Distance option only)

For circuits with load tapped off the protected line, care must be taken in setting the loss of load feature to ensure that the I< level detector setting is above the tapped load current. When selected, the loss of load feature operates in conjunction with the main distance scheme that is selected. In this way it provides high speed clearance for end zone faults when the Basic scheme is selected or, with permissive signal aided tripping schemes, it provides high speed back-up clearance for end zone faults if the channel fails.

2.6 Phase fault overcurrent protection

Settings for the time delayed overcurrent element should be selected to ensure discrimination with surrounding protection. Setting examples for phase fault overcurrent protection can be found in the Network Protection and Automation Guide (NPAG), a comprehensive reference textbook available from Schneider Electric.

Caution: The IEEE C.37.112 standard for IDMT curves permits some freedom to manufacturers at which time dial (TD) value the reference curve applies. Rather than pick a mid-range value, for the MiCOM P54x the reference curve norm applies at a time dial of 1. The time dial is merely a multiplier on the reference curve, in order to achieve the desired tripping time. Take care when grading with other suppliers' relays which may take TD = 5, or TD = 7 as a mid-range value to define the IDMT curve. The equivalent MiCOM P54x setting to match those relays is achieved by dividing the imported setting by 5 or 7.

2.6.1 Directional overcurrent characteristic angle settings

The relay uses a 90° connection angle for the directional overcurrent elements. The relay characteristic angles in this case are nominally set to:

- +30° Plain feeders, zero sequence source behind relay
- +45° Transformer feeder, zero sequence source in front of relay

Whilst it is possible to set the RCA to exactly match the system fault angle, it is recommended that the above figures are followed, as these settings have been shown to provide satisfactory performance and stability under a wide range of system conditions.

2.7 Thermal overload protection

Thermal overload protection can be used to prevent electrical plant from operating at temperatures in excess of the designed maximum withstand. Prolonged overloading causes excessive heating, which may result in premature ageing of the insulation, or in extreme cases, insulation failure.

2.7.1 Single time constant characteristic

The current setting is calculated as:

Thermal Trip = Permissible continuous loading of the plant item/CT ratio.

Typical time constant values are given in the following table. The relay setting, 'Time Constant 1', is in minutes.

	Time constant τ (minutes)	**Limits**
Air-core reactors	40	
Capacitor banks	10	
Overhead lines	10	Cross section ≥ 100 mm2 Cu or 150 mm2 Al
Cables	60 - 90	Typical, at 66 kV and above
Busbars	60	

An alarm can be raised on reaching a thermal state corresponding to a percentage of the trip threshold. A typical setting might be 'Thermal Alarm' = 70% of thermal capacity.

2.7.2 Dual time constant characteristic

The current setting is calculated as:

Thermal Trip = Permissible continuous loading of the transformer / CT ratio.

Typical time constants:

	τ1 (minutes)	**τ2 (minutes)**	**Limits**
Oil-filled transformer	5	120	Rating 400 - 1600 kVA

An alarm can be raised on reaching a thermal state corresponding to a percentage of the trip threshold. A typical setting might be 'Thermal Alarm' = 70% of thermal capacity.

Note: The thermal time constants given in the above tables are typical only. Reference should always be made to the plant manufacturer for accurate information.

2.8 Earth fault (ground overcurrent) and sensitive earth fault (SEF) protection

Caution: The IEEE C.37.112 standard for IDMT curves permits some freedom to manufacturers at which time dial (TD) value the reference curve applies. Rather than pick a mid-range value, for the MiCOM P54x the reference curve norm applies at a time dial of 1. The time dial is merely a multiplier on the reference curve, in order to achieve the desired tripping time. Take care when grading with other suppliers' relays which may take TD = 5, or TD = 7 as a mid-range value to define the IDMT curve. The equivalent MiCOM P54x setting to match those relays is achieved by dividing the imported setting by 5 or 7.

2.8.1 Directional earth fault protection

2.8.1.1 Residual voltage polarization

It is possible that small levels of residual voltage will be present under normal system conditions due to system imbalances, VT inaccuracies, relay tolerances etc. Hence, the relay includes a user settable threshold (IN>VNPol Set) which must be exceeded in order for the DEF function to be operational. In practice, the typical zero sequence voltage on a healthy system can be as high as 1% (i.e.: 3% residual), and the VT error could be 1% per phase. A setting between 1% and 4% is typical. The residual voltage measurement provided in the **Measurements** column of the menu may assist in determining the required threshold setting during commissioning, as this will indicate the level of standing residual voltage present.

2.8.2 General setting guidelines for directional earth fault (ground overcurrent) protection

When setting the relay characteristic angle (RCA) for the directional earth fault element, a positive angle setting was specified. This was due to the fact that the quadrature polarizing voltage lagged the nominal phase current by 90°; i.e. the position of the current under fault conditions was leading he polarizing voltage and hence a positive RCA was required. With directional earth fault DEF, the residual current under fault conditions lies at an angle lagging the polarizing voltage. Hence, negative RCA settings are required for DEF applications. This is set in cell 'I>N' in the relevant earth fault menu.

The following angle settings are recommended for a residual voltage polarized relay:-

- Distribution systems (solidly earthed) -45°
- Transmissions systems (solidly earthed) -60°

For negative sequence polarization, the RCA settings must be based on the angle of the upstream negative phase sequence source impedance.

2.8.3 Sensitive earth fault protection element (SEF)

SEF would normally be fed from a core balance current transformer (CBCT) mounted around the three phases of the feeder cable. However, care must be taken in the positioning of the CT with respect to the earthing of the cable sheath. See Figure 10 below.

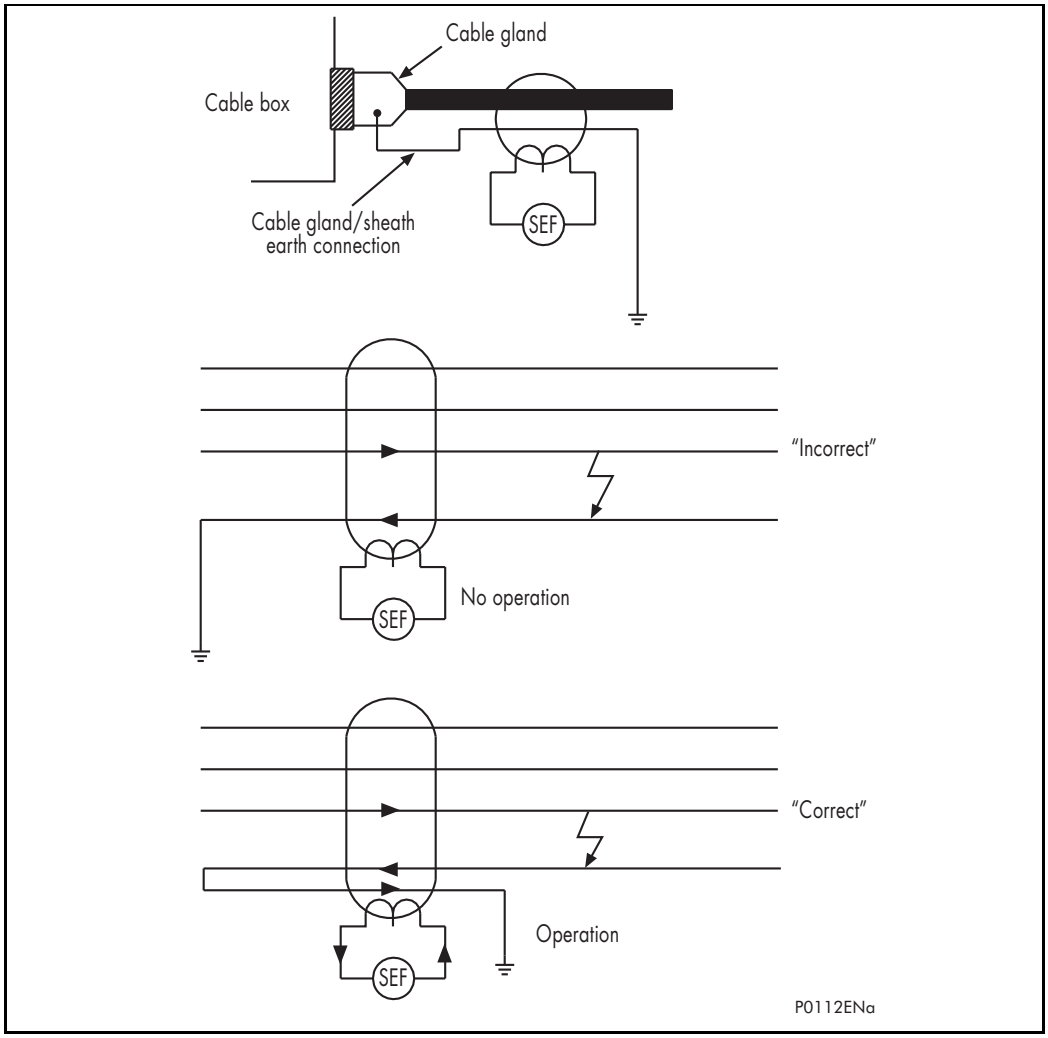

Figure 10 Positioning of core balance current transformers

As can be seen from the diagram, if the cable sheath is terminated at the cable gland and earthed directly at that point, a cable fault (from phase to sheath) will not result in any unbalance current in the core balance CT. Hence, prior to earthing, the connection must be brought back through the CBCT and earthed on the feeder side. This then ensures correct relay operation during earth fault conditions.

2.9 Negative sequence overcurrent protection (NPS)

The following section describes how negative phase sequence overcurrent protection may be applied in conjunction with standard overcurrent and earth fault protection in order to alleviate some less common application difficulties:

- Negative phase sequence overcurrent elements give greater sensitivity to resistive phase-to-phase faults, where phase overcurrent elements may not operate.
- In certain applications, residual current may not be detected by an earth fault relay due to the system configuration. For example, an earth fault relay applied on the delta side of a Dy (delta-wye) transformer is unable to detect earth faults on the star (wye) side. However, negative sequence current will be present on both sides of the transformer for any fault condition, irrespective of the transformer configuration. Therefore, a negative phase sequence overcurrent element may be employed to provide time-delayed back-up protection for any uncleared asymmetrical faults downstream.
- It may be required to simply alarm for the presence of negative phase sequence currents on the system. Operators may then investigate the cause of the unbalance.

2.9.1 Negative phase sequence current threshold, 'I2> current set'

The current pick-up threshold must be set higher than the negative phase sequence current due to the maximum normal load unbalance on the system. This can be set practically at the commissioning stage, making use of the relay measurement function to display the standing negative phase sequence current, and setting at least 20% above this figure.

Where the negative phase sequence element is required to operate for specific uncleared asymmetric faults, a precise threshold setting would have to be based upon an individual fault analysis for that particular system due to the complexities involved. However, to ensure operation of the protection, the current pick-up setting must be set approximately 20% below the lowest calculated negative phase sequence fault current contribution to a specific remote fault condition.

2.9.2 Time delay for the NPS overcurrent element, 'I2> time delay'

As stated above, correct setting of the time delay for this function is vital. It should also be noted that this element is applied primarily to provide back-up protection to other protective devices or to provide an alarm. Hence, in practice, it would be associated with a long time delay.

It must be ensured that the time delay is set greater than the operating time of any other protective device (at minimum fault level) on the system which may respond to unbalanced faults.

2.9.3 Directionalizing the negative phase sequence overcurrent element

Where negative phase sequence current may flow in either direction through a relay location, such as parallel lines, directional control of the element should be employed. Directionality is achieved by comparison of the angle between the negative phase sequence voltage and the negative phase sequence current and the element may be selected to operate in either the forward or reverse direction. A suitable relay characteristic angle setting (I2> Char Angle) is chosen to provide optimum performance. This setting should be set equal to the phase angle of the negative sequence current with respect to the inverted negative sequence voltage (– V2), in order to be at the center of the directional characteristic.

The angle that occurs between V2 and I2 under fault conditions is directly dependent upon the negative sequence source impedance of the system. However, typical settings for the element are as follows;

- For a transmission system the RCA should be set equal to -60°
- For a distribution system the RCA should be set equal to -45°

For the negative phase sequence directional elements to operate, the relay must detect a polarizing voltage above a minimum threshold, **I2> V2pol Set**. This must be set in excess of any steady state negative phase sequence voltage. This may be determined during the commissioning stage by viewing the negative phase sequence measurements in the relay.

2.10 Undervoltage protection

In the majority of applications, undervoltage protection is not required to operate during system earth (ground) fault conditions. If this is the case, the element should be selected in the menu to operate from a phase to phase voltage measurement, as this quantity is less affected by single phase voltage depressions due to earth faults. The measuring mode (ph-N or ph-ph) and operating mode (single phase or 3 phase) for both stages are independently settable.

The voltage threshold setting for the undervoltage protection should be set at some value below the voltage excursions which may be expected under normal system operating conditions. This threshold is dependent upon the system in question but typical healthy system voltage excursions may be in the order of -10% of nominal value.

Similar comments apply with regard to a time setting for this element, i.e. the required time delay is dependent upon the time for which the system is able to withstand a depressed voltage.

2.11 Overvoltage protection

The inclusion of the two stages and their respective operating characteristics allows for a number of possible applications;

- Use of the IDMT characteristic gives the option of a longer time delay if the overvoltage condition is only slight but results in a fast trip for a severe overvoltage. As the voltage settings for both of the stages are independent, the second stage could then be set lower than the first to provide a time delayed alarm stage if required.
- Alternatively, if preferred, both stages could be set to definite time and configured to provide the required alarm and trip stages.
- If only one stage of overvoltage protection is required, or if the element is required to provide an alarm only, the remaining stage may be disabled within the relay menu.

This type of protection must be co-ordinated with any other overvoltage relays at other locations on the system. This should be carried out in a similar manner to that used for grading current operated devices. The measuring mode (ph-N or ph-ph) and operating mode (single phase or 3 phase) for both stages are independently settable.

2.12 Compensated overvoltage protection

Temporary overvoltages in the order of seconds (even minutes) which may originate from switching or load rejection.may damage primary plant equipment. In particular, this type of overvoltage protection is applied to protect long transmission lines against Ferranti effect overvoltages where the transmission line is energized from one end only. The following graph shows the ferranti overvoltages calculated for a 345 kV and 765 kV transmission line for different line lengths based on the formulas as in chapter (*P54x/EN/OP*)

AP

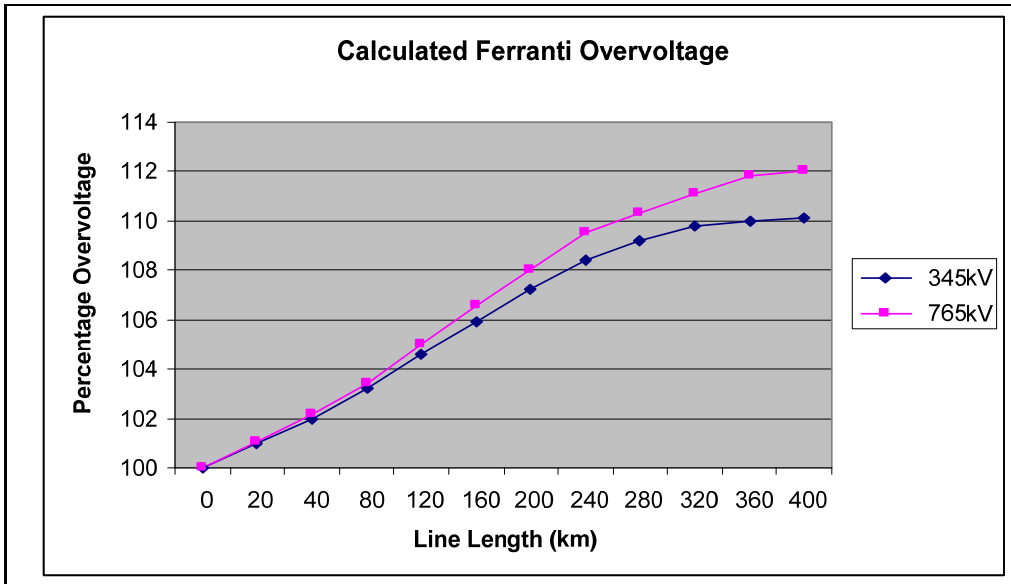

P4094ENa

Figure 11 Calculated ferranti voltage rise on 345 kV and 765 kV lines

The two stage compensated overvoltage element can be applied as alarming or trip elements. Both stages' time delays should be set not to pick-up for transient overvoltages in the system with a typical time delays of 1-2 seconds upwards being adequate for most applications. In the example above for a 345 kV transmission line of 400 km line length, the alarm threshold (stage 1) can be set to 105% and the trip threshold set to 110% for example.

AP

2.13 Residual overvoltage (neutral displacement) protection

On a healthy three phase power system, the addition of each of the three phase to earth voltages is nominally zero, as it is the vector addition of three balanced vectors at 120° to one another. However, when an earth (ground) fault occurs on the primary system this balance is upset and a 'residual' voltage is produced.

Note: This condition causes a rise in the neutral voltage with respect to earth which is commonly referred to as **neutral voltage displacement** or NVD.

Figure 12 and Figure 13 show the residual voltages that are produced during earth fault conditions occurring on a solid and impedance earthed power system respectively.

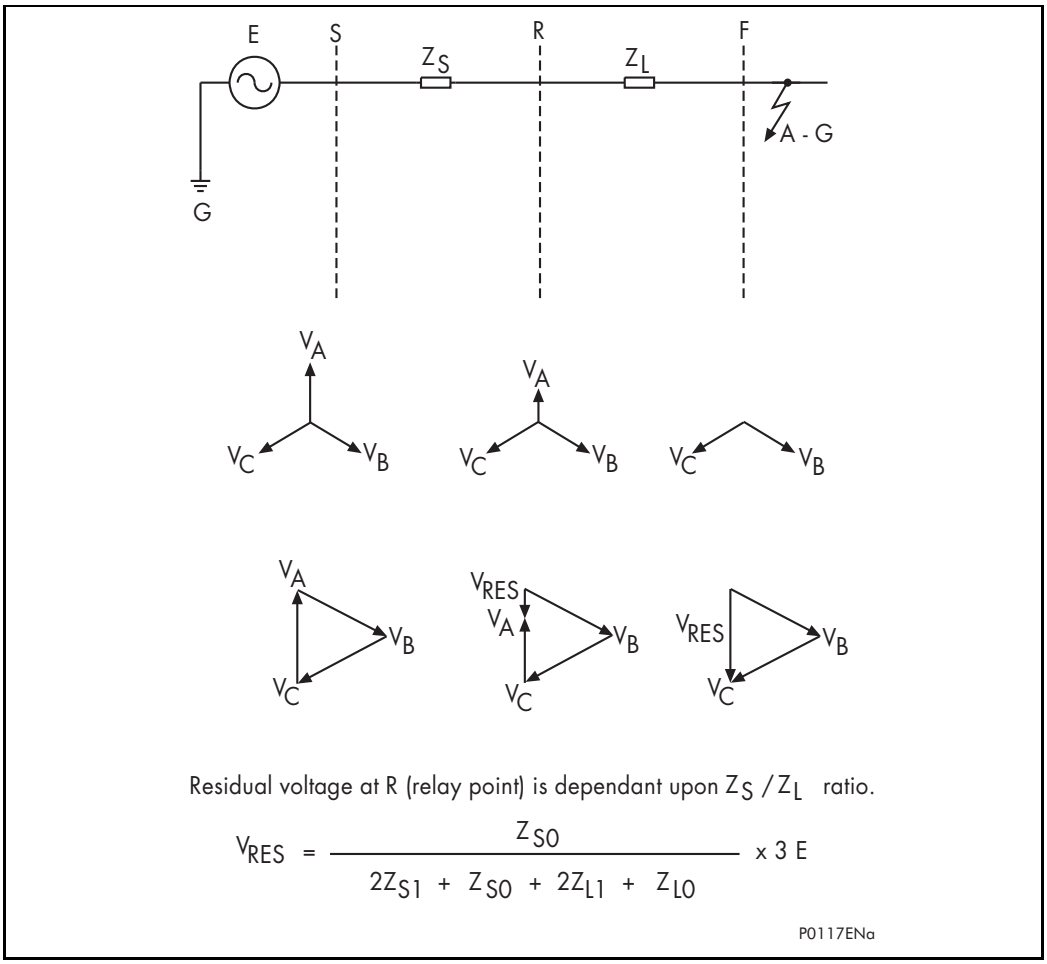

Figure 12 Residual voltage, solidly earthed system

As shown in Figure 12 the residual voltage measured by a relay for an earth fault on a solidly earthed system is solely dependent upon the ratio of source impedance behind the relay to line impedance in front of the relay, up to the point of fault. For a remote fault, the Zs/Zl ratio will be small, resulting in a correspondingly small residual voltage. As such, depending upon the relay setting, such a relay would only operate for faults up to a certain distance along the system. The value of residual voltage generated for an earth fault condition is given by the general formula shown.

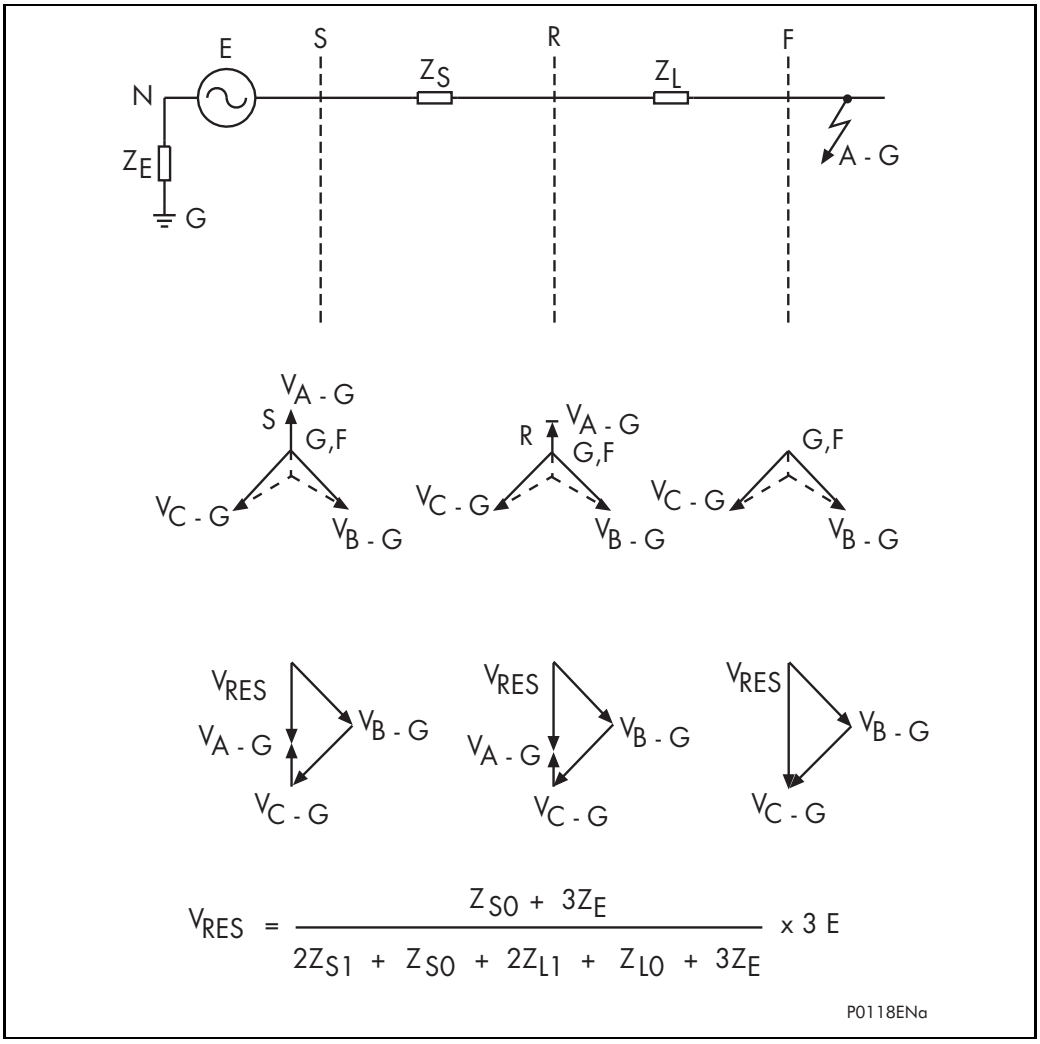

Figure 13 Residual voltage, resistance earthed system

Figure 13 shows that a resistance earthed system will always generate a relatively large degree of residual voltage, as the zero sequence source impedance now includes the earthing impedance. It follows then, that the residual voltage generated by an earth fault on an insulated system will be the highest possible value (3 x phase-neutral voltage), as the zero sequence source impedance is infinite.

The detection of a residual overvoltage condition is an alternative means of earth fault detection, which does not require any measurement of zero sequence current. This may be particularly advantageous at a tee terminal where the infeed is from a delta winding of a transformer (and the delta acts as a zero sequence current trap).

Note: Where residual overvoltage protection is applied, such a voltage will be generated for a fault occurring anywhere on that section of the system and hence the NVD protection must co-ordinate with other earth/ground fault protection.

AP

2.13.1 Setting guidelines

The voltage setting applied to the elements is dependent upon the magnitude of residual voltage that is expected to occur during the earth fault condition. This in turn is dependent upon the method of system earthing employed and may be calculated by using the formulae previously given in Figure 12 and Figure 13. It must also be ensured that the relay is set above any standing level of residual voltage that is present on the system.

Note: IDMT characteristics are selectable on the first stage of NVD in order that elements located at various points on the system may be time graded with one another.

2.14 Circuit breaker fail protection (CBF)

2.14.1 Breaker fail timer settings

Typical timer settings to use are as follows:

CB fail reset mechanism	tBF time delay	Typical delay for 2 ½ cycle circuit breaker
Initiating element reset	CB interrupting time + element reset time (max.) + error in tBF timer + safety margin	50 + 45 + 10 + 50 = 155 ms
CB open	CB auxiliary contacts opening/closing time (max.) + error in tBF timer + safety margin	50 + 10 + 50 = 110 ms
Undercurrent elements	CB interrupting time + undercurrent element (max.) + safety margin	50 + 25 + 50 = 125 ms

Note: All CB Fail resetting involves the operation of the undercurrent elements. Where element reset or CB open resetting is used the undercurrent time setting should still be used if this proves to be the worst case.

The examples above consider direct tripping of a 2½ cycle circuit breaker.

Note: Where auxiliary tripping relays are used, an additional 10-15 ms must be added to allow for trip relay operation.

2.14.2 Breaker fail undercurrent settings

The phase undercurrent settings (I<) must be set less than load current, to ensure that I< operation indicates that the circuit breaker pole is open. A typical setting for overhead line or cable circuits is 20% In, reduced to 10% or 5% where the infeed has a high SIR ratio (e.g. at a spur terminal with embedded generation infeed).

The sensitive earth fault protection (SEF) undercurrent element must be set less than the respective trip setting, typically as follows:

ISEF< = (ISEF> trip) / 2

2.15 Broken conductor detection

The majority of faults on a power system occur between one phase and ground or two phases and ground. These are known as shunt faults and arise from lightning discharges and other overvoltages which initiate flashovers. Alternatively, they may arise from other causes such as birds on overhead lines or mechanical damage to cables etc. Such faults result in an appreciable increase in current and hence in the majority of applications are easily detectable.

Another type of unbalanced fault that can occur on the system is the series or open circuit fault. These can arise from broken conductors, maloperation of single phase switchgear, or single-phasing of fuses. Series faults will not cause an increase in phase current on the system and hence are not readily detectable by standard protection. However, they will produce an unbalance and a resultant level of negative phase sequence current, which can be detected.

It is possible to apply a negative phase sequence overcurrent relay to detect the above condition. However, on a lightly loaded line, the negative sequence current resulting from a series fault condition may be very close to, or less than, the full load steady state unbalance arising from CT errors, load unbalance etc. A negative sequence element therefore would not operate at low load levels.

2.15.1 Setting guidelines

For a broken conductor affecting a single point earthed power system, there will be little zero sequence current flow and the ratio of I2/I1 that flows in the protected circuit will approach 100%. In the case of a multiple earthed power system (assuming equal impedance's in each sequence network), the ratio I2/I1 will be 50%.

AP

In practice, the levels of standing negative phase sequence current present on the system govern this minimum setting. This can be determined from a system study, or by making use of the relay measurement facilities at the commissioning stage. If the latter method is adopted, it is important to take the measurements during maximum system load conditions, to ensure that all single-phase loads are accounted for.

Note: A minimum value of 8% negative phase sequence current is required for successful relay operation.

Since sensitive settings have been employed, it can be expected that the element will operate for any unbalance condition occurring on the system (for example, during a single pole auto-reclose cycle). Hence, a long time delay is necessary to ensure co-ordination with other protective devices. A 60 second time delay setting may be typical.

The example following information was recorded by the relay during commissioning;

$I_{full\ load}$ = 500 A

I_2 = 50 A

therefore the quiescent I2/I1 ratio is given by;

I_2/I_1 = 50/500 = 0.1

To allow for tolerances and load variations a setting of 20% of this value may be typical: Therefore set I2/I1 = 0.2

In a double circuit (parallel line) application, using a 40% setting will ensure that the broken conductor protection will operate only for the circuit that is affected. Setting 0.4 results in no pick-up for the parallel healthy circuit.

Set I2/I1 Time Delay = 60 s to allow adequate time for short circuit fault clearance by time delayed protections.

2.16 Communication between relays

2.16.1 Optical budgets

When applying any of the P54x range of current differential relays it is important to select the appropriate protection communications interface. This will depend on the fiber used and distance between devices. The following table shows the optical budgets of the available communications interfaces.

From April 2008	**850 nm Multi mode**	**1300 nm Multi mode**	**1300 nm Single mode**	**1550 nm Single mode**
Min. transmit output level (average power)	-19.8 dBm	-6 dBm	-6 dBm	-6 dBm
Receiver sensitivity (average power)	-25.4 dBm	-49 dBm	-49 dBm	-49 dBm
Optical budget	5.6 dB	43.0 dB	43.0 dB	43.0 dB
Less safety margin (3 dB)	2.6 dB	40.0 dB	40.0 dB	40.0 dB
Typical cable loss	2.6 dB/km	0.8 dB/km	0.4 dB/km	0.3 dB/km
Max. transmission distance	1 km	50.0 km	100.0 km	130 km

Note: From April 2008, the optical budgets and hence also the maximum transmission distances of the 1300 nm multi-mode, 1300 nm single-mode and 1550 nm single-mode fiber interfaces have been increased, to the values shown in the table above.

AP

The new interface cards are identified by “43dB” marked in the centre of the backplate, visible from the rear of the relay. These new fiber interfaces are fully backward-compatible with the original equivalent interface. However, in order to achieve the increased distance, both/all ends of the P54x scheme would need to use the new interface.

Pre-April 2008 relays will have the original optical budgets and maximum transmission distances, as shown below.

Pre-April 2008	**850 nm Multi mode**	**1300 nm Multi mode**	**1300 nm Single mode**	**1550 nm Single mode**
Min. transmit output level (average power)	-19.8 dBm	-10 dBm	-10 dBm	-10 dBm
Receiver sensitivity (average power)	-25.4 dBm	-37 dBm	-37 dBm	-37 dBm
Optical budget	5.6 dB	27.0 dB	27.0 dB	27.0 dB
Less safety margin (3dB)	2.6 dB	24.0 dB	24.0 dB	24.0 dB
Typical cable loss	2.6 dB/km	0.8 dB/km	0.4 dB/km	0.3 dB/km
Max. transmission distance	1 km	30.0 km	60.0 km	80 km

The total optical budget is given by transmitter output level minus the receiver sensitivity and will indicate the total allowable losses that can be tolerated between devices. A safety margin of 3 dB is also included in the above table. This allows for degradation of the fiber as a result of ageing and any losses in cable joints. The remainder of the losses will come from the fiber itself. The figures given are typical only and should only be used as a guide.

In general, the 1300 nm and 1550 nm interfaces will be used for direct connections between relays. The 850 nm would be used where multiplexing equipment is employed.

2.16.2 Clock source setting

The Clock Source should be set to “Internal” at all system ends, where they are connected by direct optical fiber, as the P54x at each end has to supply the clock.

The Clock Source should be set to **External** at all system ends, where the ends are connected by multiplexer equipment which is receiving a master clock signal from the multiplexer network. It is important that there is a single master clock source on the multiplexer network and that the multiplexer equipment at each end is synchronized to this clock.

Note: This setting is not applicable if IEEE C37.94 mode selected.

2.16.3 Data rate

The data rate for signaling between the two or three ends may be set to either 64 kbit/sec or 56 kbit/sec as appropriate.

If there is a direct fiber connection between the ends, the data rate would usually be set to 64 kbit/sec, as this gives a slightly faster trip time.

If there is a multiplexer network between the ends, then this will determine the data rate to be used by the P54x system. The electrical interface to the multiplexer (G.703 co-directional, V.35, or X.21) will be provided on either a 64 kbit/sec or 56 kbit/sec channel, and the P54x at each end must be set to match this data rate.

Generally, North American multiplexer networks are based on 56 kbit/sec (and multiples thereof) channels, whereas multiplexer networks in the rest of the world are based on 64 kbit/sec (and multiples thereof) channels.

This setting is not applicable if IEEE C37.94 mode selected.

AP

2.17 InterMiCOM^{64} (“Fiber InterMiCOM”)

The protection signaling channels of the P54x primarily intended to provide the capability for implementing current differential protection are also capable of supporting InterMiCOM^{64} teleprotection. If the P54x is configured to provide differential protection, then the InterMiCOM^{64} commands (IMx command) are transmitted together with the current differential signals. If the differential protection of the P54x is not being employed, then the communications messages are restructured to provide InterMiCOM^{64} signaling of the type supported by the MiCO*Mho* P446, P443 and P445 relays. In either case, the fundamental operation of the InterMiCOM^{64} commands is the same.

2.17.1 IMx command type

Due to the fast data rate, there is not so much difference in real performance between the three generic modes of teleprotection (Direct Intertrip, Permissive and Blocking), so only two are implemented for InterMiCOM^{64}. Direct Intertripping is available, with the second mode a combined mode for Permissive/Blocking (the latter is named as ‘*Permissive*’ in the menu). To increase the security for Intertripping (Direct transfer tripping), the InterMiCOM^{64} Direct command is issued only when 2 valid consecutive messages are received. The recommended setting is:

- For Blocking schemes set ‘Permissive’
- For Permissive scheme set ‘Permissive’
- For Transfer (inter)tripping set ‘Direct’

The setting files provide independent setting for each of the first 8 commands. Due to the fast data rate, there will be minimal speed difference between the two mode options. Both will give a typical operating time (PSL trigger at the send relay, to PSL state change at the receive relay) as shown below:

Channel mode setting	Application	Typical delay (ms)	Maximum (ms)	Comments
Permissive	Direct Fiber	3 to 7	9	Assuming no repeaters (no source of digital “noise”)
	Multiplexed Link	5 to 8 + MUX	12 + MUX	For channel bit error rate up to 1 x 10^{-3}
Direct Intertrip	Direct Fiber	4 to 8	10	Assuming no repeaters (no source of digital “noise”)
	Multiplexed link	6 to 8 + MUX	13 + MUX	For channel bit error rate up to 1 x 10^{-3}

These figures are for InterMiCOM^{64} used as a standalone feature. For use with differential message, add 2 ms for permissive mode and 4 ms for direct intertrip at 64 Kb/sec.

When using InterMiCOM^{64} to implement Aided Scheme 1 or Aided Scheme 2, it is suggested to assume a conservative worst-case channel delay of **15 ms** (pickup and reset delay), for the purposes of blocking and reversal guard calculations. The delay of the multiplexer should be added if applicable, taking into account longer standby path re-routings which might be experienced in the event of self-healing in a SONET/SDH telecomms network.

When using InterMiCOM^{64} as a standalone feature in 3-terminal applications, where fallback to “chain” topology is possible in the event of failure of one communications leg in the triangle, longer times may be experienced. In fallback mode, retransmission of the messages occurs so the path length is doubled. Overall command times to the final end can be doubled.

2.17.2 IMx fallback mode

When the ‘Default’ setting is selected, the following ‘IMx Default Value’ settings are recommended: For Intertripping schemes set **0**, for Blocking schemes set **1**. In Permissive applications, the user may prefer to latch the last healthy received state for a period of time.

3. WORKED PROTECTION EXAMPLE AND OTHER PROTECTION TIPS

3.1 Differential protection setting examples

3.1.1 Differential element

All four settings are user adjustable. This flexibility in settings allows the relay characteristic to be tailored to suit particular sensitivity and CT requirements. To simplify the protection engineer's task, we strongly recommend three of the settings be fixed to:

Is2 = 2.0 pu

k1 = 30%

k2 = 150% (2 terminal applications) or 100% (3 terminal applications)

These settings will give a relay characteristic suitable for most applications. It leaves only the Is1 setting to be decided by the user. The value of this setting should be in excess of any mismatch between line ends, if any, and should also account for line charging current, where necessary.

By considering the circuit shown in Figure 14, the settings for the phase current differential element can be established.

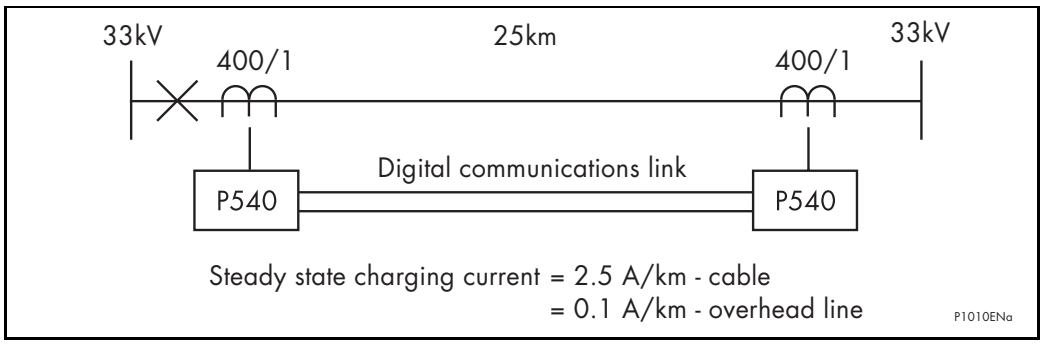

Figure 14 Typical plain feeder circuit

The following settings should be set as follows:

Is2 = 2.0 pu

k1 = 30%

k2 = 150% (for a two terminal application)

This leaves the setting of Is1 to be established.

In the case that voltage inputs are not in place, no facility to account for line charging current is available. The setting of Is1 must therefore be set above 2.5 times the steady state charging current value. In this example, assume a cable is used and there are not VT inputs connected to the relay:

Is1 > 2.5 x Ich

Is1 > 2.5 x (25km x 2.5 A/km)

Is1 > 156.25 A

The line CTs are rated at 400 amps primary. The setting of Is1 must therefore exceed 156.25/400 = 0.391 pu.

Therefore select:

Is1 = 0.4 pu

AP

If VT is connected, a facility exists to overcome the effects of the line charging current. It will be necessary in this case to enter the line positive sequence susceptance value. This can be calculated from the line charging current as follows (assuming a VT ratio of 33 kV / 110 V):

Ich = 25 x 2.5 A = 62.5 A

Susceptance B = ωC = Ich/V

B = 62.5 A/(33/√3) kV primary

B = 3.28 x 10-3 S primary

Therefore set:

B = 3.28 mS primary (= 2.46 mS secondary)

Is1 may now be set below the value of line charging current if required, however it is suggested that Is1 is chosen only sufficiently below the charging current to offer the required fault resistance coverage as described in section 2.1.2 Where charging current is low or negligible, the recommended factory default setting of 0.2 In should be applied.

3.1.2 Transformer feeder examples

Ratio correction example:

P543 and P545 relays are suitable for the protection of transformer feeders. An example is shown in Figure 15.

AP

20MVA Transformer, Dyn1, 33/11 kV

HV CT ratio - 400/1

LV CT ratio - 1500/1

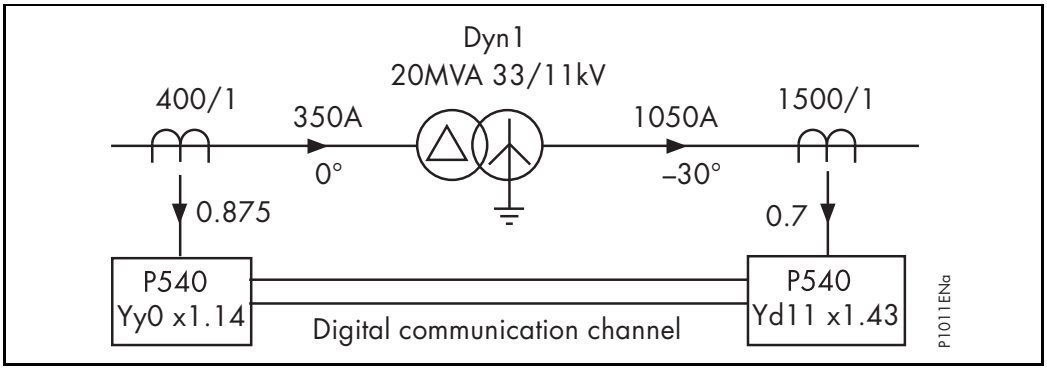

Figure 15 Typical transformer feeder circuit

It is necessary to calculate the required ratio correction factor to apply to the relays' at each line end.

33 kV full load current= 20 MVA/(33 kV.√3) = 350 A

Secondary current = 350 x 1/400 = 0.875A

11 kV full load current= 20 MVA/(11 kV.√3) = 1050 A

Secondary current = 1050 x 1/1500 = 0.7A

Each of these secondary currents should be corrected to relay rated current; in this case 1A.

HV ratio correction factor 1/0.875 = 1.14 [Setting applied to relay]

LV ratio correction factor 1/0.7 = 1.43 [Setting applied to relay]

When a Star/Delta software interposing CT is chosen, no additional account has to be taken for the $\sqrt{3}$ factor which would be introduced by the delta winding. This is accounted for by the relay.

Phase Correction Example:

Using the same transformer as shown in Figure 15 it is now necessary to correct for the phase shift between the HV and LV windings.

The transformer connection shows that the delta connected high voltage line current leads the low voltage line current by 30°. To ensure that this phase shift does not create a differential current, the phase shift must be corrected in the LV secondary circuit. The LV relay software interposing CT is effectively a winding replica of the main power transformer. It not only provides a +30° phase shift, but also performs the necessary function of filtering out any LV zero sequence current component.

Hence, the HV relay setting requires no phase shift or zero sequence current filtering (as HV winding is delta connected). The LV relay setting requires phase shifting by +30° and also requires zero sequence current filtering (as LV winding is star connected).

Set: HV = Yy0

LV = Yd11 (+30°)

It is important when considering the software ICT connection, to account for both the phase shift and zero sequence current filtering. For example, with the transformer in Figure 15, it would have been possible to provide phase compensation by applying Yd1 and Yy0 settings to the HV and LV relays respectively. Although this provides correct phase shift compensation, no zero sequence current filtering exists on the LV side and hence relay maloperation could occur for an external earth fault.

AP

3.1.3 Teed feeder example

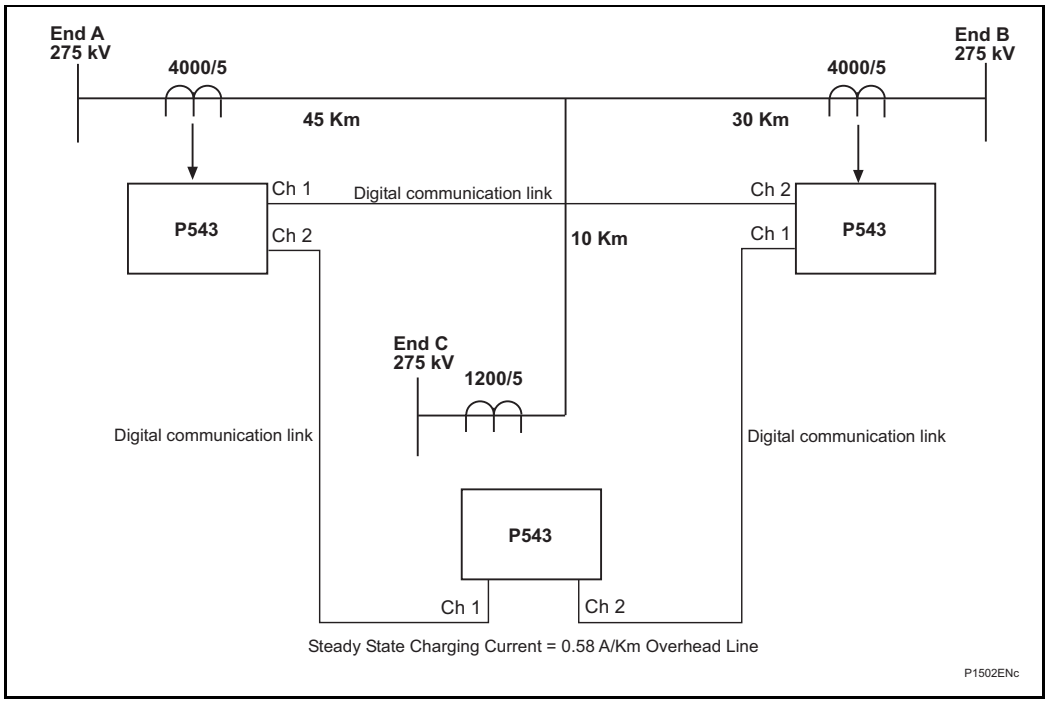

Figure 16 Typical teed feeder application

If there are not VT inputs connected, P54x relays have not facilities to account for charging line current, therefore the setting Is1 must be 2.5 times the steady state charging current.

If VT inputs are connected, there is a facility to overcome the effect of charging current. As mentioned before, it is necessary to enter the positive sequence susceptance value.

Considering the charging current on the circuit shown in Figure 16, the following calculation is done:

- Ich = 0.58 A (45 + 30 + 10) = 49.3 A
- Susceptance = ω C = Ich/V
- B = 49.3 A/(275/ √3) kV primary
- B = 0.31 x 10-3 S primary.

As the CT ratio on the three ends are different, it is necessary to apply a correction factor in order to ensure secondary currents balance for all conditions:

To calculate the correction factor (CF), the same primary current must be used even this current is not the expected load transfer for every branch. This will ensure secondary current balance for all conditions.

A good approximation to calculate the correction factor, would be to use the primary rated current of the smallest CT ratio as a base current. In this case we will use the primary rated CT current at End C, in order to correct the secondary currents to the relay rated current:

For End A 1200 A

Secondary current =1200x 5/4000 = 1.5 A

CF = 5/1.5 = 3.33

For End B 1200 A

AP

Secondary current =1200x 5/4000 = 1.5 A

CF = 5/1.5 = 3.33

For End C 1200 A prim = 5 A sec

Secondary current =1200x 5/1200 = 5 A

CF = 5/5 = 1

As mentioned on example 3.1.1, the following settings are recommended:

Is1 = 0.2 In

Is2 = 2 In

K1 = 30%

K2 = 100%

Therefore, settings in secondary values for each end are:

Is1 = 0.2In =1 A

Is2 = 2In =10 A

Note: Settings shown in primary values at ends A and B appear different compared with end C. This is not a problem as the currents at ends A and B will be multiplied by the Correction Factor, when the differential calculation is done. There would not be a requirement to alter settings by CF as the relay works in secondary values.

Susceptance settings:

For Ends A and B

With a VT ratio 275 kV/110 V and CT ratio 4000/5

RCT = 800

RVT = 2500

B = 310 μS

Secondary susceptance = 310 μS x RVT/ RCT = 968 μS

For End C

With a VT ratio 275 kV/110 V and CT ratio 1200/5

B = 310 μS

Secondary susceptance = 310 μS x RVT/ RCT = 3.22 mS sec.

3.1.4 Three winding transformer in zone with different rated CTs example

P543 and P545 relays are suitable for the protection of three winding transformers in zone. An example is shown in Figure 17.

100 MVA/100MVA/30MVA Transformer, Ynyn0d1, 400 kV/110 kV/30 kV

HV, 400 kV CT ratio - 600/1

MV, 110 kV CT ratio - 1200/1

LV, 30 kV CT ratio - 2000/5

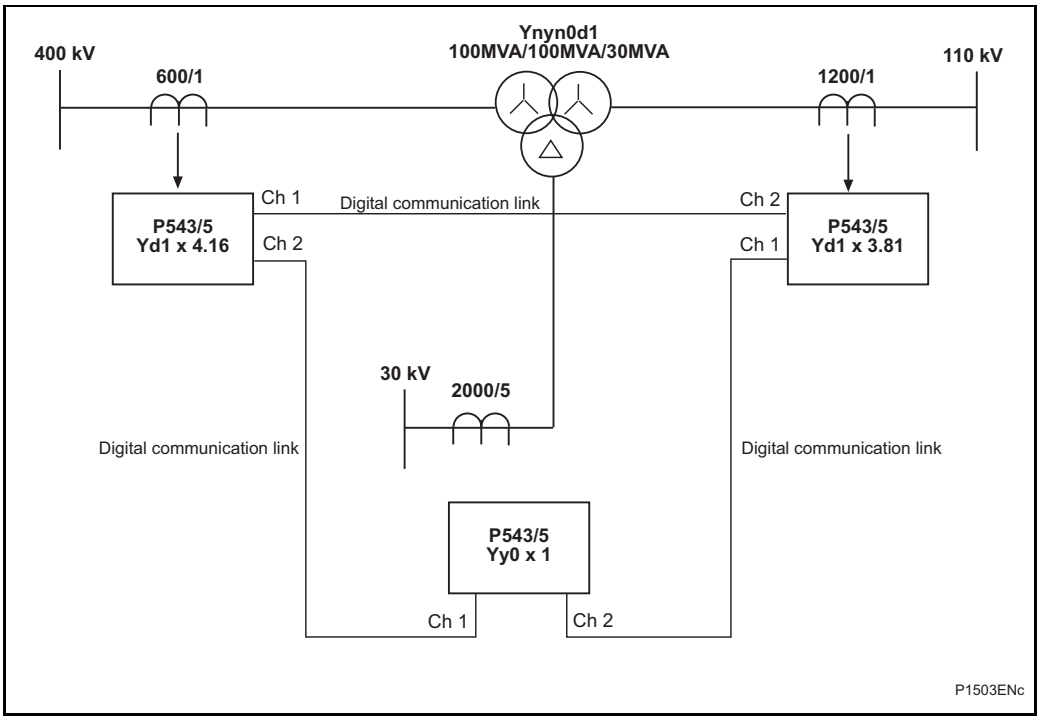

Figure 17 Three winding transformer in zone application

These three relays must be rated differently, i.e. 1A for HV and MV side and 5 A for 30 kV side. This does not present a problem for P54x relays as the digital signals representing the currents are in pu.

It is necessary to calculate the required ratio correction factor (CF) as well as the phase correction factor for each end. To choose the appropriate vector compensation, it is necessary to account for phase current and zero sequence current filtering as explained in example 3.1.2.

To calculate the correction factor range, it is necessary to use the same MVA base for the three sides of the transformer although the third winding actually has a lower rated MVA. This is to ensure secondary current balance for all conditions.

For HV side:	100 MVA/ (400 kV.√3)	=	144.34 A.
	Secondary current	=	144.34 x 1/600 = 0.24 A
For MV side:	100 MVA/ (110 kV.√3)	=	524.86 A.
	Secondary current	=	524.86 x 1/1200 = 0.44 A
For LV side:	100 MVA/ (30 kV.√3)	=	1924.5 A.
	Secondary current	=	1924.5x 5/2000 = 4.81 A

Each secondary current should be corrected to relay rated current, in this case 1A for HV and MV side and 5 A for 30 kV side

HV ratio correction factor = 1/0.24 = 4.16

MV ratio correction factor = 1/0.44 = 2.29

LV ratio correction factor = 5/4.81 = 1.04

AP

To choose the vector compensation connection, it should be noted that the Wye connected HV line is in phase with the MV line current and leads the LV line current by 30°. Therefore for LV side, the phase shift must be compensated.

To account for the zero sequence current filtering in the case of an external earth fault, it is necessary to connect the Wye connected power transformer windings to an interposing current transformer (internal relay ICT) to trap the zero sequence current (the secondary side being connected delta).

To account for both vector compensation and zero sequence current filtering, the following vectorial compensation setting is recommended:

- For HV side = Yd1 (-30 deg)
- For MV side = Yd1 (-30 deg)
- For LV side = Yy0 (0 deg)

Note: It is not necessary to include the √3 factor in the calculation as this is incorporated in the relay algorithm.

P543 and P545 relays are suitable for transformer applications, as such an inrush restrain is provided on these relay models. By enabling inrush restrain, an additional current differential high setting (Id High set) becomes enable.

When the inrush restrain feature is enabled, it is necessary that this function is enabled in the relay at each line end (3 ends).

For the differential calculation the same recommended settings for the previous examples are recommended:

- Is1 = 0.2 In
- Is2 = 2 In
- K1 = 30%
- K2 = 100%

Therefore, settings in secondary values are:

For relays rated to 1 A (HV and MV sides) Is1 = 200 mA and Is2 = 2 A

For relay rated to 5 A (LV side) Is1 = 1 A and Is2 = 10 A

For the current differential high setting (Id High set) the setting must be in excess of the anticipated inrush current after ratio correction. Assuming that maximum inrush is 12 times the nominal transformer current, it would be safe to set the relays at 15 times the nominal current, therefore the setting would be:

- Id high set : for HV side = 15 In = 15 A

  for MV side = 15 In = 15 A

  for LV side = 15 In = 75 A

3.2 Distance protection setting example

3.2.1 Objective

To protect the 100 km double circuit line between Green Valley and Blue River substations using a MiCOM P54x in distance POR Permissive Overreach mode and to set the relay at Green Valley substation, shown in Figure 18. It is assumed that mho characteristics will be used.

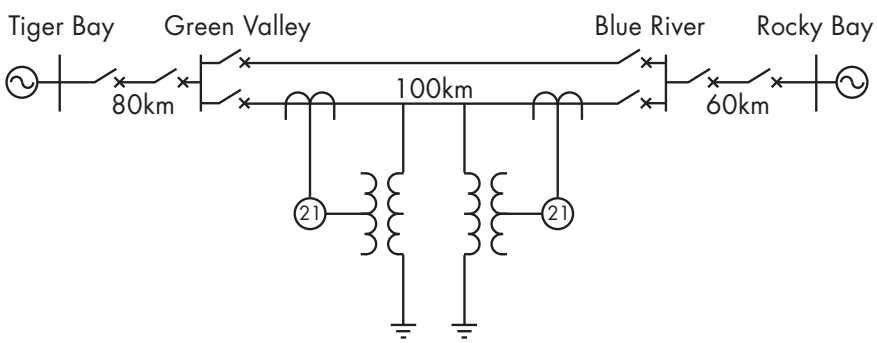

System data
Green Valley - Blue River transmission line
System voltage 230kv
System grounding solid
CT ratio 1200/5
VT ratio 230000/115
Line length 100km
Line impedance
Z1 = 0.089 + J0.476 OHM/km
Z2 = 0.426 + J1.576 OHM/km
Fault levelts
Green Valley substation busbars maximum 5000MVA, minimum 2000MVA
Blue River substation busbars maximum 3000MVA, minimum 1000MVA
Circuit continous rating = 400MVA
Worst-case power factor of load = 0.85

P1019ENb

Figure 18 System assumed for worked example

AP

3.2.2 System data

Line length: 100 km

Line impedances: Z_1 = 0.089 + j0.476 = 0.484 ∠79.4° Ω/km

Z_0 = 0.426 + j1.576 = 1.632 ∠74.8° Ω/km

Z_0/Z_1 = 3.372 ∠-4.6°

CT ratio: 1 200/5

VT ratio: 230 000/115

3.2.3 Relay settings

It is assumed that Zone 1 Extension is not used and that only three forward zones are required. Settings on the relay can be performed in primary or secondary quantities and impedances can be expressed as either polar or rectangular quantities (menu selectable). For the purposes of this example, secondary quantities are used.

3.2.4 Line impedance

Ratio of secondary to primary impedance $= \frac{1200 / 5}{230000 / 115} = 0.12$

Line impedance secondary = ratio CT/VT x line impedance primary.

Line Impedance = 100 x 0.484 ∠79.4° (primary) x 0.124

= 5.81 ∠79.4° Ω secondary.

Select Line Angle = 80° for convenience.

Therefore set Line Impedance and Line Angle: = 5.81 ∠80° Ω secondary.

AP

3.2.5 Residual compensation for ground fault elements

The residual compensation factor can be applied independently to certain zones if required. This feature is useful where line impedance characteristics change between sections or where hybrid circuits are used. In this example, the line impedance characteristics do not change and as such a common KZN factor can be applied to each zone. This is set as a ratio “kZN Res. Comp”, and an angle “kZN Angle”:

kZN Res. Comp, $|kZN|$ = (Z0 - Z1) / 3Z1 i.e.: As a ratio

kZN Angle, ∠kZN = ∠ (Z0 - Z1) / 3Z1 Set in degrees

ZL0 - ZL1 = (0.426 + j1.576) - (0.089 + j0.476)

= 0.337 + j1.1

= 1.15 ∠72.9°

kZN $= \frac{1.15\angle 72.9°}{3 \times 0.484\angle 79.4°} = 0.79\ \angle -6.5°$

Therefore, select:

kZN Res. Comp = 0.7

kZN Angle = - 6.5°

3.2.6 Zone 1 phase and ground reach settings

Required Zone 1 reach is to be 80% of the line impedance between Green Valley and Blue River substations.

Setting the Relay in the SIMPLE setting mode (recommended):

- Set Zone 1 Ph and Zone 1 Gnd reach = 80%

From this the relay will automatically calculate the required ohmic reaches, or they can be entered manually in the ADVANCED mode, as follows:

Required Zone 1 reach	=	0.8 x 100 x 0.484 ∠79.4° x 0.12
Z1	=	4.64 ∠79.4° Ω secondary
The Line Angle	=	80°
Therefore actual Zone 1 reach, Z1	=	4.64 ∠80° Ω secondary.

3.2.7 Zone 2 phase and ground reach settings

Required Zone 2 impedance	=	(Green Valley-Blue River) line impedance + 50% (Blue River-Rocky Bay) line impedance
Z2	=	(100+30) x 0.484 ∠79.4° x 0.12 = 7.56 ∠79.4° Ω secondary.
The Line Angle	=	80°
Actual Zone 2 reach setting	=	7.56 ∠80° Ω secondary

Alternatively, in SIMPLE setting mode, this reach can be set as a percentage of the protected line. Typically a figure of at least 120% is used.

3.2.8 Zone 3 phase and ground reach settings

Required Zone 3 forward reach	=	(Green Valley-Blue River + Blue River-Rocky Bay) x 1.2
	=	(100+60) x 1.2 x 0.484 ∠79.4° x 0.12
Z3	=	11.15 ∠79.4° ohms secondary
Actual Zone 3 forward reach setting	=	11.16 ∠80° ohms secondary

Alternatively, in SIMPLE setting mode, this reach can be set as a percentage of the protected line.

3.2.9 Zone 3 reverse reach

In the absence of other special requirements, Zone 3 can be given a small reverse reach setting, of Z3' = 10%. This is acceptable because the protected line length is > 30km.

Zone 4 Reverse Settings with POR and BLOCKING schemes

Where zone 4 is used to provide reverse directional decisions for Blocking or Permissive Overreach schemes, zone 4 must reach further behind the relay than zone 2 for the remote relay. This can be achieved by setting: Z4 ≥ ((Remote zone 2 reach) x 120%), where mho characteristics are used.

AP

Remote Zone 2 reach = (Blue River-Green Valley) line impedance + 50%n (Green Valley-Tiger Bay) line impedance

= (100+40) x 0.484 ∠79.4° x 0.12

= 8.13 ∠79.4° Ω secondary

Z4 ≥ ((8.13 ∠79.4°) x 120%) - (5.81 ∠79.4°)

= 3.95 ∠79.4°

Minimum zone 4 reverse reach setting = 3.96 ∠80° ohms secondary

3.2.10 Load avoidance

The maximum full load current of the line can be determined from the calculation:

I_{FLC} = [(Rated MVA_{FLC}) / (√3 x Line kV)]

In practice, relay settings must allow for a level of overloading, typically a maximum current of 120% IFLC prevailing on the system transmission lines. Also, for a double circuit line, during the auto-reclose dead time of fault clearance on the adjacent circuit, twice this level of current may flow on the healthy line for a short period of time. Therefore the circuit current loading could be 2.4 x IFLC.

With such a heavy load flow, the system voltage may be depressed, typically with phase voltages down to 90% of Vn nominal.

AP

Allowing for a tolerance in the measuring circuit inputs (line CT error, VT error, relay tolerance, and safety margin), this results in a load impedance which might be 3 times the expected “rating”.

To avoid the load, the blinder impedance needs to be set:

Z ≤ (Rated phase-ground voltage Vn) / (IFLC x 3)

= (115/√3) / (IFLC x 3)

Set the V< Blinder voltage threshold at the recommended 70% of Vn = 66.4 x 0.7 = 45 V.

3.2.11 Additional settings for quadrilateral applications

3.2.11.1 Phase fault resistive reaches (Rph)

In primary impedance terms, RPh reaches must be set to cover the maximum expected phase-to-phase fault resistance. Ideally, RPh must be set greater than the maximum fault arc resistance for a phase-phase fault, calculated as follows:

Ra = $(28710 \times L)/If^{1.4}$

Where:

If = Minimum expected phase-phase fault current (A);

L = Maximum phase conductor separation (m);

Ra = Arc resistance, calculated from the van Warrington formula (Ω).

Typical figures for Ra (primary Ω) are given in the table below, for different values of minimum expected phase fault current.

Conductor spacing (m)	Typical system voltage (kV)	If = 1 kA	If = 2 kA	If = 3 kA
4	110 - 132	7.2 Ω	2.8 Ω	1.6 Ω
8	220 - 275	14.5 Ω	5.5 Ω	3.1 Ω
11	380 - 400	19.9 Ω	7.6 Ω	4.3 Ω

Note: Dual-end infeed effects will make a fault resistance appear higher, because each relay cannot measure the current contribution from the remote line end. The apparent fault resistance increase factor could be 2 to 8 times the calculated resistance. Therefore it is recommended that the Zone resistive reaches are set to say, 4 times the primary arc resistance calculation.

In the example, the minimum phase fault level is 1000 MVA. This is equivalent to an effective short-circuit fault feeding impedance of:

Z = kV 2/MVA = 2302/1000 = 53 Ω (primary)

The lowest phase fault current level is equivalent to:

Ifault = (MVA x 1000)/(√3 x kV)

= (1000 x 1000)/(√3 x 230)

= 2.5 kA

And this fault current in the van Warrington formula would give an arc resistance of:

Ra = 4 Ω

As this impedance is relatively small compared to the value "Z" calculated above, there is no need to perform an iterative equation to work out the actual expected Ifault (which would in reality be lower due to the added Ra arc resistance in the fault loop). It will suffice to increase the calculated Ra by the recommended factor of four, and a little extra to account for the fault current being lower than that calculated. So, in this case use a minimum setting of 5 x Ra, which is 20 Ω primary.

AP

It is obvious that the setting could easily be set above 20 Ω on the primary system (perhaps following the rule of thumb formula in section 2.3.7). Typically, all zone resistive reaches would be set greater than this 20 Ω primary figure, and ideally less than the load impedance (see "load avoidance" section).

3.2.11.2 Ground fault resistive reaches (RGnd)

Fault resistance would comprise arc-resistance and tower footing resistance. A typical resistive reach coverage setting would be 40 Ω on the primary system.

For high resistance earth faults, the situation may arise where no distance elements could operate. In this case it will be necessary to provide supplementary earth fault protection, for example using the relay Channel Aided DEF protection. In such cases it is not essential to set large resistive reaches for ground distance, and then RGnd can be set according to the rule of thumb formula in section 2.3.8.

3.3 Teed feeder protection

The application of distance relays to three terminal lines is fairly common. However, several problems arise when applying distance protection to three terminal lines.

3.3.1 The apparent impedance seen by the distance elements

Figure 19 shows a typical three terminal line arrangement. For a fault at the busbars of terminal B the impedance seen by a relay at terminal A will be equal to:

Za = Zat + Zbt + [Zbt.(Ic/Ia)]

Relay A will underreach for faults beyond the tee-point with infeed from terminal C. When terminal C is a relatively strong source, the underreaching effect can be substantial. For a zone 2 element set to 120% of the protected line, this effect may result in non-operation of the element for internal faults. This not only effects time delayed zone 2 tripping but also channel-aided schemes. Where infeed is present, it will be necessary for Zone 2 elements at all line terminals to overreach both remote terminals with allowance for the effect of tee-point infeed. Zone 1 elements must be set to underreach the true impedance to the nearest terminal without infeed. Both these requirements can be met through use of the alternative setting groups.

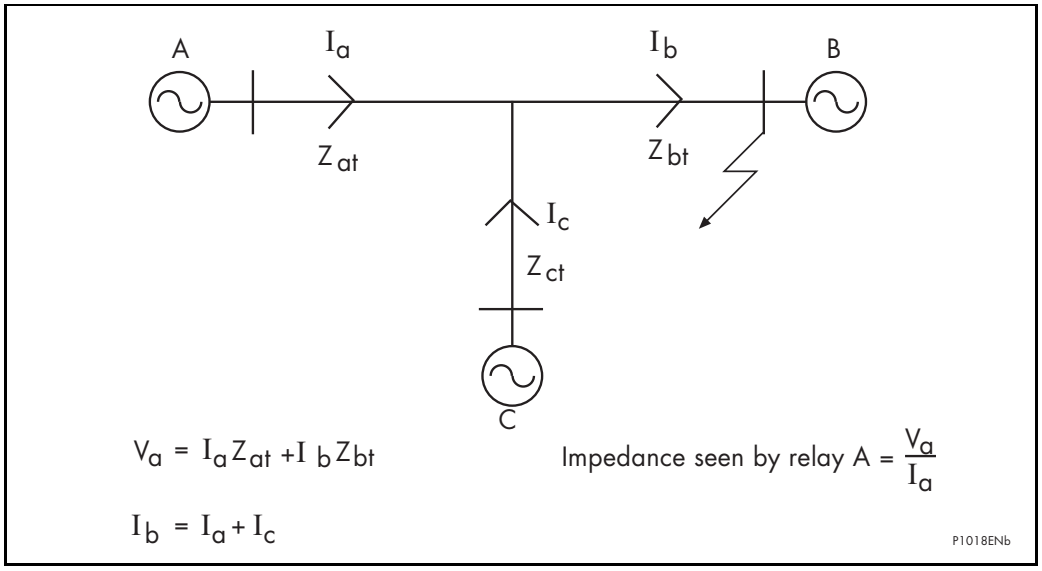

Figure 19 Teed feeder application - apparent impedances seen by RELAY

3.3.2 Permissive overreach schemes

To ensure operation for internal faults in a POR scheme, the relays at the three terminals should be able to see a fault at any point within the protected feeder. This may demand very large zone 2 reach settings to deal with the apparent impedances seen by the relays.

AP

A POR scheme requires the use of two signaling channels. A permissive trip can only be issued upon operation of zone 2 and receipt of a signal from both remote line ends. The requirement for an 'AND' function of received signals must be realized through use of contact logic external to the relay, or the internal Programmable Scheme Logic. Although a POR scheme can be applied to a three terminal line, the signaling requirements make its use unattractive.

3.3.3 Permissive underreach schemes

For a PUR scheme, the signaling channel is only keyed for internal faults. Permissive tripping is allowed for operation of zone 2 plus receipt of a signal from either remote line end. This makes the signaling channel requirements for a PUR scheme less demanding than for a POR scheme. A common power line carrier (PLC) signaling channel or a triangulated signaling arrangement can be used. This makes the use of a PUR scheme for a teed feeder a more attractive alternative than use of a POR scheme.

The channel is keyed from operation of zone 1 tripping elements. Provided at least one zone 1 element can see an internal fault then aided tripping will occur at the other terminals if the overreaching zone 2 setting requirement has been met. There are however two cases where this is not possible:

- Figure 20 (i) shows the case where a short tee is connected close to another terminal. In this case, zone 1 elements set to 80% of the shortest relative feeder length do not overlap. This leaves a section not covered by any zone 1 element. Any fault in this section would result in zone 2 time delayed tripping.
- Figure 20 (ii) shows an example where terminal 'C' has no infeed. Faults close to this terminal will not operate the relay at 'C' and hence the fault will be cleared by the zone 2 time-delayed elements of the relays at 'A' and 'B'.

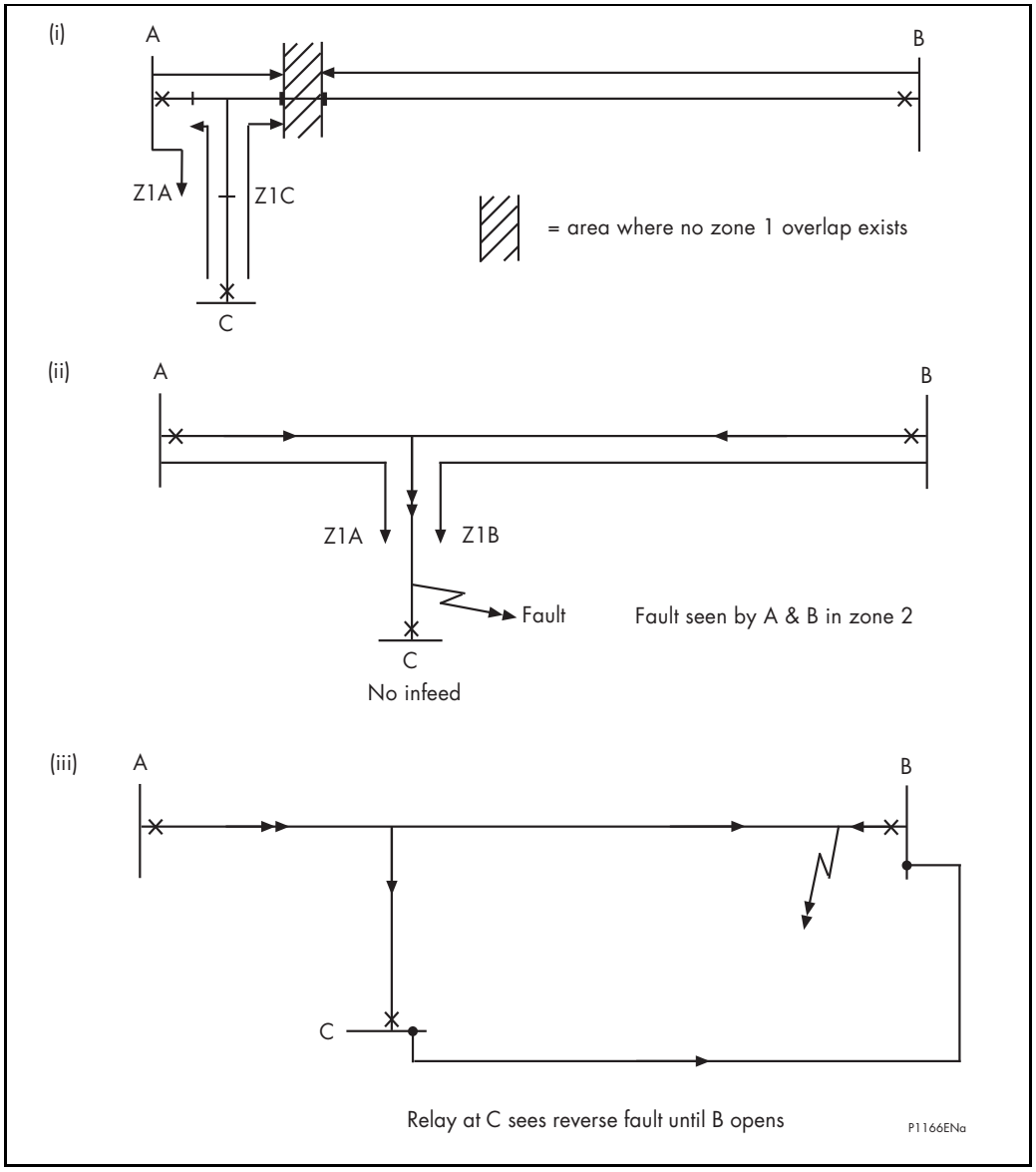

Figure 20 Teed feeder applications

Figure 20 (iii) illustrates a further difficulty for a PUR scheme. In this example current is outfed from terminal 'C' for an internal fault. The relay at 'C' will therefore see the fault as reverse and not operate until the breaker at 'B' has opened; i.e. sequential tripping will occur.

3.3.4 Blocking schemes

Blocking schemes are particularly suited to the protection of teed feeders, since high speed operation can be achieved where there is no current infeed from one or more terminals. The scheme also has the advantage that only a common simplex channel or a triangulated simplex channel is required.

The major disadvantage of blocking schemes is highlighted in Figure 20 (iii) where fault current is outfed from a terminal for an internal fault condition. Relay 'C' sees a reverse fault condition. This results in a blocking signal being sent to the two remote line ends, preventing tripping until the normal zone 2 time delay has expired.

3.4 VT connections

3.4.1 Open delta (vee connected) VT's

The MiCOM P54x relay can be used with vee connected VTs by connecting the VT secondary's to:

C19, C20 and C21 input terminals, with the C22 input left unconnected for P543 and P544

D19, D20 and D21 input terminals, with the D22 input left unconnected for P545 and P546

This type of VT arrangement cannot pass zero-sequence (residual) voltage to the relay, or provide any phase to neutral voltage quantities. Therefore any protection that is dependent upon phase to neutral voltage measurements should be disabled.

The ground directional comparison elements, ground distance elements, neutral voltage displacement (residual overvoltage) and CT supervision all use phase-to-neutral voltage signals for their operation and should be disabled. The DEF elements should be selected for negative sequence polarization to avoid the use of phase-to-neutral voltages. Under and over voltage protection can be set as phase-to-phase measuring elements, whereas all other protection elements should remain operational.

The accuracy of the single phase voltage measurements can be impaired when using vee connected VT's. The relay attempts to derive the phase to neutral voltages from the phase to phase voltage vectors. If the impedance of the voltage inputs were perfectly matched the phase to neutral voltage measurements would be correct, provided the phase to phase voltage vectors were balanced. However, in practice there are small differences in the impedance of the voltage inputs, which can cause small errors in the phase to neutral voltage measurements. This may give rise to an apparent residual voltage. This problem also extends to single phase power measurements that are also dependent upon their respective single phase voltages.

The phase to neutral voltage measurement accuracy can be improved by connecting 3, well matched, load resistors between the phase voltage inputs (C19, C20, C21 for P543 and P544 or D19, D20, D21 for P545 and P546) and neutral C22 for P543 and P544 or D22 for P545 and P546 thus creating a 'virtual' neutral point. The load resistor values must be chosen so that their power consumption is within the limits of the VT. It is recommended that 10 kΩ ±1% (6 W) resistors are used for the 110 V (Vn) rated relay, assuming the VT can supply this burden.

3.4.2 VT single point earthing

The MiCOM P54x will function correctly with conventional 3 phase VT's earthed at any one point on the VT secondary circuit. Typical earthing examples being neutral earthing, or B-phase (UK: "yellow phase" earthing).

3.5 Trip circuit supervision (TCS)

The trip circuit, in most protective schemes, extends beyond the relay enclosure and passes through components such as fuses, links, relay contacts, auxiliary switches and other terminal boards. This complex arrangement, coupled with the importance of the trip circuit, has led to dedicated schemes for its supervision.

Several trip circuit supervision scheme variants are offered. Although there are no dedicated settings for TCS, in the MiCOM P54x the following schemes can be produced using the programmable scheme logic (PSL). A user alarm is used in the PSL to issue an alarm message on the relay front display. If necessary, the user alarm can be re-named using the menu text editor to indicate that there is a fault with the trip circuit.

3.5.1 TCS scheme 1

3.5.1.1 Scheme description

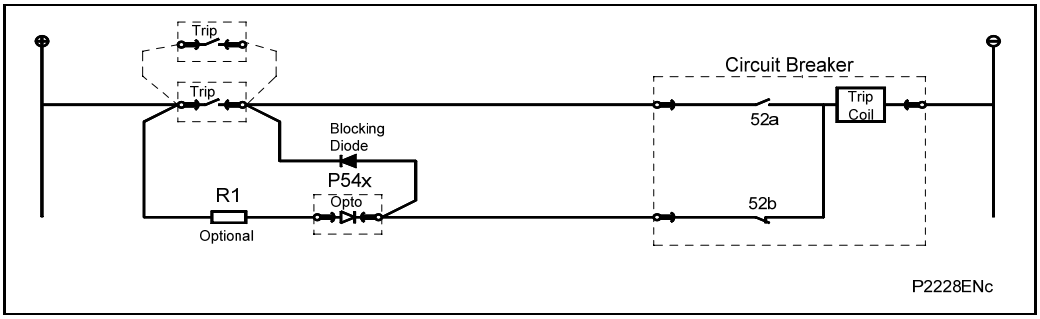

Figure 21 TCS scheme 1

This scheme provides supervision of the trip coil with the breaker open or closed, however, pre-closing supervision is not provided. This scheme is also incompatible with latched trip contacts, as a latched contact will short out the opto for greater than the recommended DDO timer setting of 400 ms. If breaker status monitoring is required a further 1 or 2 opto inputs must be used.

Note: A 52a CB auxiliary contact follows the CB position and a 52b contact is in the opposite state.

AP

When the breaker is closed, supervision current passes through the opto input, blocking diode and trip coil. When the breaker is open current still flows through the opto input and into the trip coil via the 52b auxiliary contact. Hence, no supervision of the trip path is provided whilst the breaker is open. Any fault in the trip path will only be detected on CB closing, after a 400 ms delay.

Resistor R1 is an optional resistor that can be fitted to prevent mal-operation of the circuit breaker if the opto input is inadvertently shorted, by limiting the current to <60 mA. The resistor should not be fitted for auxiliary voltage ranges of 30/34 volts or less, as satisfactory operation can no longer be guaranteed. The table below shows the appropriate resistor value and voltage setting (OPTO CONFIG menu) for this scheme.

This TCS scheme will function correctly even without resistor R1, since the opto input automatically limits the supervision current to less that 10 mA. However, if the opto is accidentally shorted the circuit breaker may trip.

Auxiliary voltage (Vx)	Resistor R1 (ohms)	Opto voltage setting with R1 fitted
48/54	1.2 k	24/27
110/250	2.5 k	48/54
220/250	5.0 k	110/125

Note: When R1 is not fitted the opto voltage setting must be set equal to supply voltage of the supervision circuit.

3.5.1.2 Scheme 1 PSL

Figure 21 shows the scheme logic diagram for the TCS scheme 1. Any of the available opto inputs can be used to indicate whether or not the trip circuit is healthy. The delay on drop off timer operates as soon as the opto is energized, but will take 400 ms to drop off / reset in the event of a trip circuit failure. The 400 ms delay prevents a false alarm due to voltage dips caused by faults in other circuits or during normal tripping operation when the opto input is shorted by a self-reset trip contact. When the timer is operated the NC (normally closed) output relay opens and the LED and user alarms are reset.

The 50 ms delay on pick-up timer prevents false LED and user alarm indications during the relay power up time, following an auxiliary supply interruption.

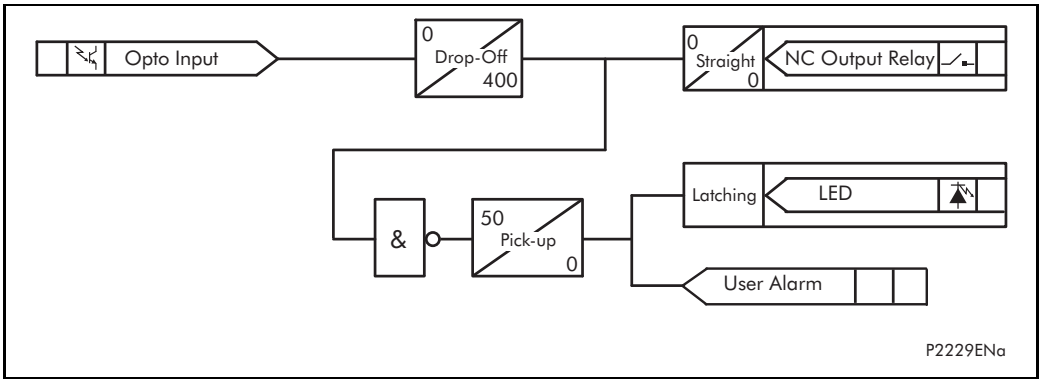

Figure 22 PSL for TCS schemes 1 and 3

3.5.2 TCS scheme 2

3.5.2.1 Scheme description

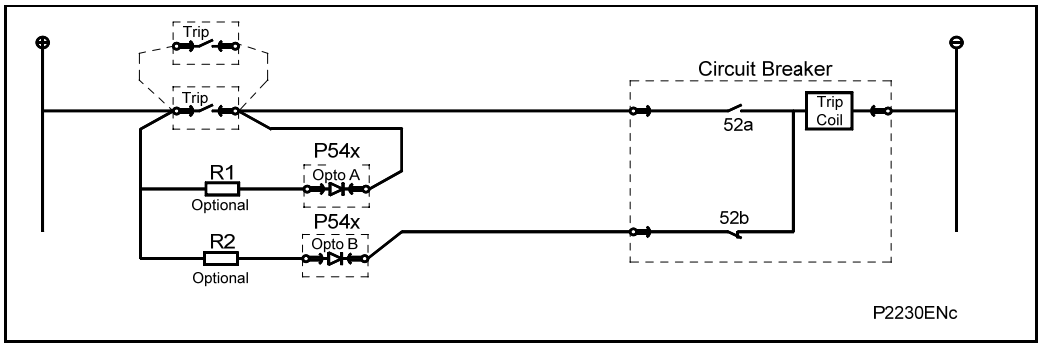

Figure 23 TCS scheme 2

Much like scheme 1, this scheme provides supervision of the trip coil with the breaker open or closed and also does not provide pre-closing supervision. However, using two opto inputs allows the relay to correctly monitor the circuit breaker status since they are connected in series with the CB auxiliary contacts. This is achieved by assigning Opto A to the 52a contact and Opto B to the 52b contact. Provided the **Circuit Breaker Status** is set to **52a and 52b** (CB CONTROL column) the relay will correctly monitor the status of the breaker. This scheme is also fully compatible with latched contacts as the supervision current will be maintained through the 52b contact when the trip contact is closed.

When the breaker is closed, supervision current passes through opto input A and the trip coil. When the breaker is open current flows through opto input B and the trip coil. As with scheme 1, no supervision of the trip path is provided whilst the breaker is open. Any fault in the trip path will only be detected on CB closing, after a 400 ms delay.

As with scheme 1, optional resistors R1 and R2 can be added to prevent tripping of the CB if either opto is shorted. The resistor values of R1 and R2 are equal and can be set the same as R1 in scheme 1.

AP

3.5.2.2 Scheme 2 PSL

The PSL for this scheme (Figure 23) is practically the same as that of scheme 1. The main difference being that both opto inputs must be off before a trip circuit fail alarm is given.

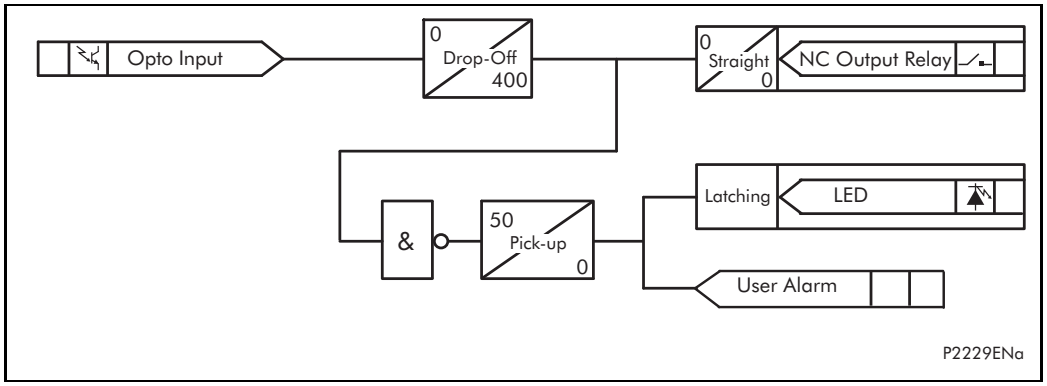

Figure 24 PSL for TCS scheme 2

3.5.3 TCS scheme 3

3.5.3.1 Scheme description

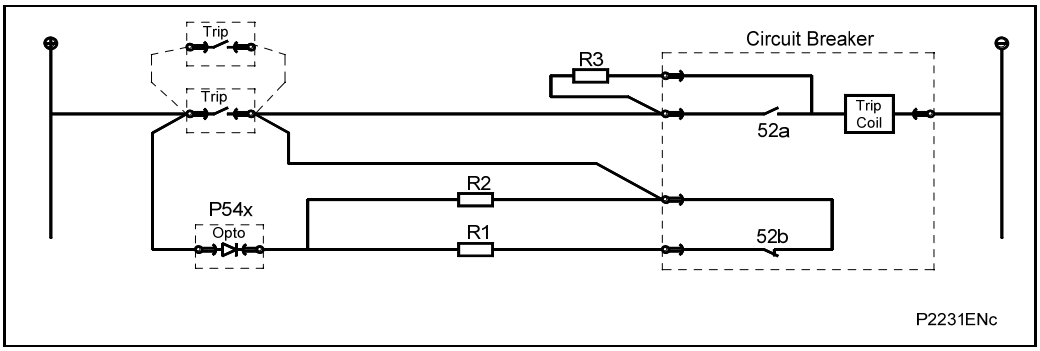

Figure 25 TCS scheme 3

Scheme 3 is designed to provide supervision of the trip coil with the breaker open or closed, but unlike schemes 1 and 2, it also provides pre-closing supervision. Since only one opto input is used, this scheme is not compatible with latched trip contacts. If circuit breaker status monitoring is required a further 1 or 2 opto inputs must be used.

When the breaker is closed, supervision current passes through the opto input, resistor R2 and the trip coil. When the breaker is open current flows through the opto input, resistors R1 and R2 (in parallel), resistor R3 and the trip coil. Unlike schemes 1 and 2, supervision current is maintained through the trip path with the breaker in either state, therefore giving full pre-closing supervision.

As with schemes 1 and 2, resistors R1 and R2 are used to prevent false tripping, if the opto-input is accidentally shorted. However, unlike the other two schemes, this scheme is dependent upon the position and value of these resistors. Removing them would result in incomplete trip circuit monitoring. The table below shows the resistor values and voltage settings required for satisfactory operation.

Auxiliary voltage (Vx)	Resistor R1 & R2 (ohms)	Resistor R3 (ohms)	Opto voltage setting
48/54	1.2 k	0.6 k	24/27
110/250	2.5 k	1.2 k	48/54
220/250	5.0 k	2.5 k	110/125

AP

Note: Scheme 3 is not compatible with auxiliary supply voltages of 30/34 volts and below.

3.5.3.2 Scheme 3 PSL

The PSL for scheme 3 is identical to that of scheme 1 (see Figure 21).

3.6 Intermicom^{64} application example

The protection signaling channels of the P54x primarily intended to provide the capability for implementing current differential protection are also capable of supporting InterMiCOM^{64} teleprotection. If the P54x is configured to provide differential protection, then the InterMiCOM^{64} commands (IMx command) are transmitted together with the current differential signals. If the differential protection of the P54x is not being employed, then the communications messages are restructured to provide InterMiCOM^{64} signaling of the type supported by the MiCO*Mho* P446, P443 and P445 relays. In either case, the fundamental operation of the InterMiCOM^{64} commands is the same, but the way in which communications failures are handled differs. In a differential scheme, failure or disturbance of communications could cause failure of the protection scheme and the alarming requirements are high. In a scheme where differential protection is not being employed, and InterMiCOM^{64} is being employed to transfer command status between the line ends, communications disturbances may be less critical and this is reflected in the InterMiCOM^{64} implementation of P446, P443 and P445.

An example of how to apply an InterMiCOM^{64} scheme is given below. This assumes that the P54x has been configured as a P443/5 (i.e. no differential protection) and takes account of different level of communication disturbance alarming provided in this configuration. It is also assumed that the optional distance protection is included. This example should be read in conjunction with the InterMiCOM^{64} section of the operation (OP) section of the MiCO*Mho* P446, P443 or P445 Technical Manual.

3.6.1 InterMiCOM^{64} mapping for three ended application – BLOCKING or PUR example

The following figure shows a suggested InterMiCOM^{64} mapping:

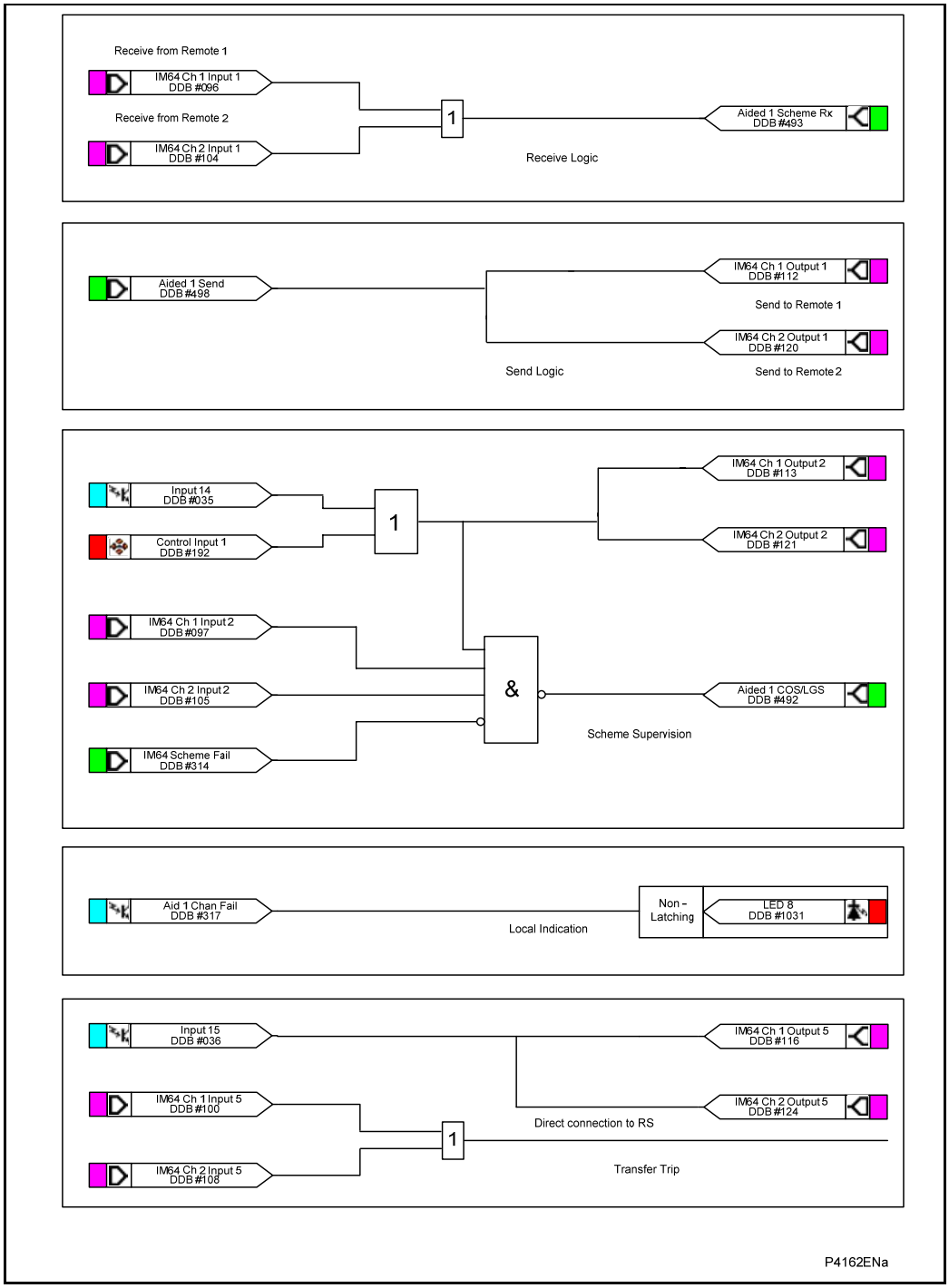

Figure 26 InterMiCOM^{64} mapping in a three ended application

AP

3.6.2 Intermicom^{64} application example general advice

MiCOM relays have standard, pre-configured aided scheme logic internal to each relay. Therefore, it is not necessary to draw the zone logic for Permissive Underreach, Permissive Overreach or Blocking schemes within the PSL. To gain the benefit of selecting a proven and tested scheme, the standard "Aided" scheme logic should be used.

When InterMiCOM^{64} is being used as the transmission medium for the aided channel signal(s), all that is required is to create one-to-one mapping between the Aided scheme logic, and the InterMiCOM^{64} (IM64) signals to be used. The PSL editor is used to perform the simple mapping required.

In order to configure the signal SEND logic:

- Route the required Aided send DDB signal to the IM64 Output to be used.

In order to configure the signal RECEIVE logic:

- Route the required IM64 Input signal to the Aided scheme Rx DDB input.

3.6.3 Three-ended applications

The example in the section 3.6.2 illustrates a three terminal application, in this case in a BLOCKING or PUR scheme mode. Note that this breaks with the rule of the one-to-one mapping as described in section 3.6.2. In three terminal schemes, the input to the Aided scheme is some kind of logic combination of the signals received from the two remote ends:

- BLOCKING schemes are recommended to take a logical OR of the incoming IM64 signals, before being mapped to Aided scheme Rx. This is to ensure that if the fault is declared as external at any line end, Zone 2 accelerated tripping at the local end is blocked.
- PERMISSIVE UNDERREACH schemes are recommended to take a logical OR of the incoming IM64 signals, before being mapped to Aided scheme Rx. Thus, if the fault is declared as internal at any remote line end, Zone 2 accelerated tripping at the local end is allowed. As Zone 1 is an underreaching element, it can only key the channel for an internal fault, so there is no need for AND logic.
- PERMISSIVE OVERREACH schemes are recommended to take a logical AND of the incoming IM64 signals, before being mapped to Aided scheme Rx. This is to ensure that the fault must be seen as forward from both remote ends before Zone 2 accelerated tripping at the local end is allowed. As Zone 2 keys the channel, confirmation of a forward decision at all three line ends must be confirmed before aided scheme tripping is permitted.

In all three terminal schemes, the send logic is a one-to-many mapping. The Aided send is mapped to the IM64 signals which transmit to both remote ends. The connection to Ch1 (channel 1), and Ch2 (channel 2) ensures communication to the two remote ends. In case of channel failure between any two relays, the 'Aided 1 COS/LGS' signal will become high in the relay that is not receiving and activate the FallBackMode. Therefore, to preserve the stability in 3-ended blocking scheme, the corresponding 'IM_X DefaultValue' in the setting file must be set high. It should be noted that in the PUR and POR schemes such a precaution is not necessary since the aided signal can not be sent via broken communications.

3.6.4 Intermicom^{64} application example scheme description

The scheme in Figure 26 is assumed as a case study. The top half of the page shows the mapping of the send and receive logic as already described. It can be seen that the first InterMiCOM bit (Input 1) is being used for the purposes of Aided scheme 1.

Note:

- Two Aided schemes are available, Aided 1 and Aided 2. This allows for example an independent Distance aided scheme, and a DEF aided scheme to be configured. Whether Aided 1 is used alone, or Aided 2 is used too will depend on the utility preference. Further detail is available in the MiCOM Technical Manual.
- The InterMiCOM^{64} bits are duplex in nature, in other words InterMiCOM^{64} bit 1 between the relay at line end A and B is completely independent from the same bit traveling from end B to A.
- For simplicity, it is recommended that Aided scheme 1 is mapped to IM64 bit 1.
- Likewise, where Aided scheme 2 is applied, it is more logical to assign IM64 bit 2, providing that it is not already used in the PSL for some other function.

3.6.5 Intermicom^{64} application example channel supervision

For teleprotection schemes, it is commonplace to configure alarming in the event of channel failure. The third dotted box on the case study provides full monitoring of the scheme in three ended applications. Here, IM64 bit 2 is permanently energized when the channel is healthy. The OR gate shows how an opto input (L4) and a Control Input might be used as prerequisites for healthy signaling:

AP

- The use of an opto input allows a check that correct DC battery voltages are present for local teleprotection purposes, or perhaps that a selector switch has not taken the scheme out of service.
- The use of a Control Input allows switching in or out of the teleprotection via menu commands on the relay concerned. This provides convenient in-out switching of the entire teleprotection scheme by visiting/addressing just one line end relay.

The exact logic condition to declare the local “signaling healthy” condition will be chosen such as to reflect the utility’s practices. In the example shown, this logical condition is then mapped to IM64 Output 2 (bit 2), for transmitting to the two remote line ends.

In order to declare that the signaling scheme is healthy, bit 2 (the assigned health-check bit) must be received from both remote ends. This can be combined with a general check on InterMiCOM^{64} messaging, DDB #314. The AND gate shows that signaling is only healthy if:

- The local DC battery voltage/control state is set to allow teleprotection operation,
- The remote end health-check bits are both received successfully,
- The scheme alarms have not detected messaging failures (IM64 Scheme Fail).

A logical **AND** combination is used, with the gate output inverted to feed into the aided scheme logic. This scheme failure output then feeds the standard **Channel out of Service** (COS) logic.

The fourth dotted box illustrates how the same scheme failure alarm (COS) can then be simply mapped to any LED indication, or output contact for alarming.

Note:

- If a simpler scheme is preferred, it is not necessary to assign a health-check bit. In such instances, the IM64 Scheme Fail alarm alone can be used to drive COS. However, if a test mode selection were to disable the aided scheme at one end, the other line ends would have no indication of the depleted operation.
- For this reason, the use of the health-check bit is recommended.

3.6.6 Intermicom^{64} application example transfer trip

The case study scheme shows a suggested Transfer Trip ("Intertrip") in the lower dotted box area. This is an optional addition (or alternative) with any aided scheme. The example shows an opto input (L5) which is being used to initiate the intertrip, mapped to send IM64 bit 5 to both remote ends. On receipt of the intertrip bit from any remote line end, the OR gate is used to map the received intertrip to whichever output relay trips the local breaker. In the diagram, relay 3 is shown as an example.

Again it can be seen that the PSL is the means by which the InterMiCOM^{64} signals are driven, and to where any received bits are routed too.

3.6.7 InterMiCOM^{64} application example - mapping for two ended application

The same scheme principle as shown in Figure 26 applies in a two-ended application. The scheme will be simplified, whereby Aided Send signals are mapped directly to IM64 bits, on a one-to-one mapping. The IM64 bit received from the remote end is also mapped directly to the Aided Scheme Rx signal, requiring no AND or OR logic combination.

3.6.8 Intermicom^{64} application example - dual redundant communications channels

In dual redundant operation, the user has the option to send end-end signals via two paths. The two paths (channels) are defined as Ch1 and Ch2. Several factors can be taken into account when using this mode:

- The assignment of IM64 bits is completely independent, per channel. For example if all 8 possible bits per channel are assigned to discrete functions, this allows a total of 16 end-end signals.
- The receive logic should employ AND ("both") or OR ("any") logic gate functions to combine the dual redundant signals, as appropriate to the desired operation.

AP

3.6.9 Intermicom^{64} application example - scheme co-ordination timers

Distance and DEF and delta directional aided schemes use scheme co-ordination timers to ensure correct operation. The function of these is documented in the OP sections of the Technical Manual. However, when using InterMiCOM^{64} as the teleprotection channel, the time delays applied can be different to those used for traditional channels. This is due, mainly, to the fact that the response time of opto inputs and output contacts is bypassed. An output contact will take typically 3 to 5 ms to close, and an opto input will take 1 to 2 ms to recognise a change of state. Therefore, using InterMiCOM^{64} will save around 5-6 ms for I/O response time.

The new time delays appropriate for Dist Dly and Current Reversal Guard timers are as listed in the following sections. Where direct fiber connections are used for InterMiCOM^{64}, ignore the + *MUX* addition. Where a multiplexed link is used, the + *MUX* figure should account for the multiplexer response time. If this is unknown, it can be obtained for the specific installation using the appropriate measurement in the MEASUREMENTS 4 menu column.

3.6.9.1 InterMiCOM^{64} application example - distance PUR permissive underreach

- Dist dly = zero

3.6.9.2 InterMiCOM^{64} application example - distance POR permissive overreach

- Dist dly = zero
- tREV. Guard = 40 ms + MUX

3.6.9.3 InterMiCOM^{64} application example - distance blocking

- Dist dly (50Hz) = 25 ms + MUX
- Dist dly (60Hz) = 22 ms + MUX
- tREV. Guard = 25 ms + MUX

3.6.9.4 InterMiCOM^{64} application example - directional earth Fault (DEF) POR permissive overreach

- DEF dly = zero
- tREV. Guard = 50 ms + MUX

3.6.9.5 InterMiCOM^{64} application example - directional earth fault (DEF) blocking

- DEF dly = 25 ms + MUX
- tREV. Guard = 35 ms + MUX

3.6.9.6 InterMiCOM^{64} application example - delta directional POR permissive overreach

- Delta dly = zero
- tREVERSAL GUARD = 40 ms + MUX

3.6.9.7 InterMiCOM^{64} application example - delta directional blocking

- Delta dly = 14 ms + MUX
- tREVERSAL GUARD = 25 ms + MUX

Note: When adding any multiplexer delays, the maximum response time of the multiplexed link should be assumed. This should include any addition for rerouting in self-healing networks.

3.6.10 Fallback mode for InterMiCOM^{64} bits

On temporary loss of the InterMiCOM^{64} channel, the user may select to latch the last healthy signal for a period of time, or to fallback to a chosen default value.

For Intertripping schemes, reverting to a default state of 0 is recommended;

For Blocking schemes set, reverting to a default state of 1 is recommended;

For Permissive applications, latching the last healthy received state is recommended.