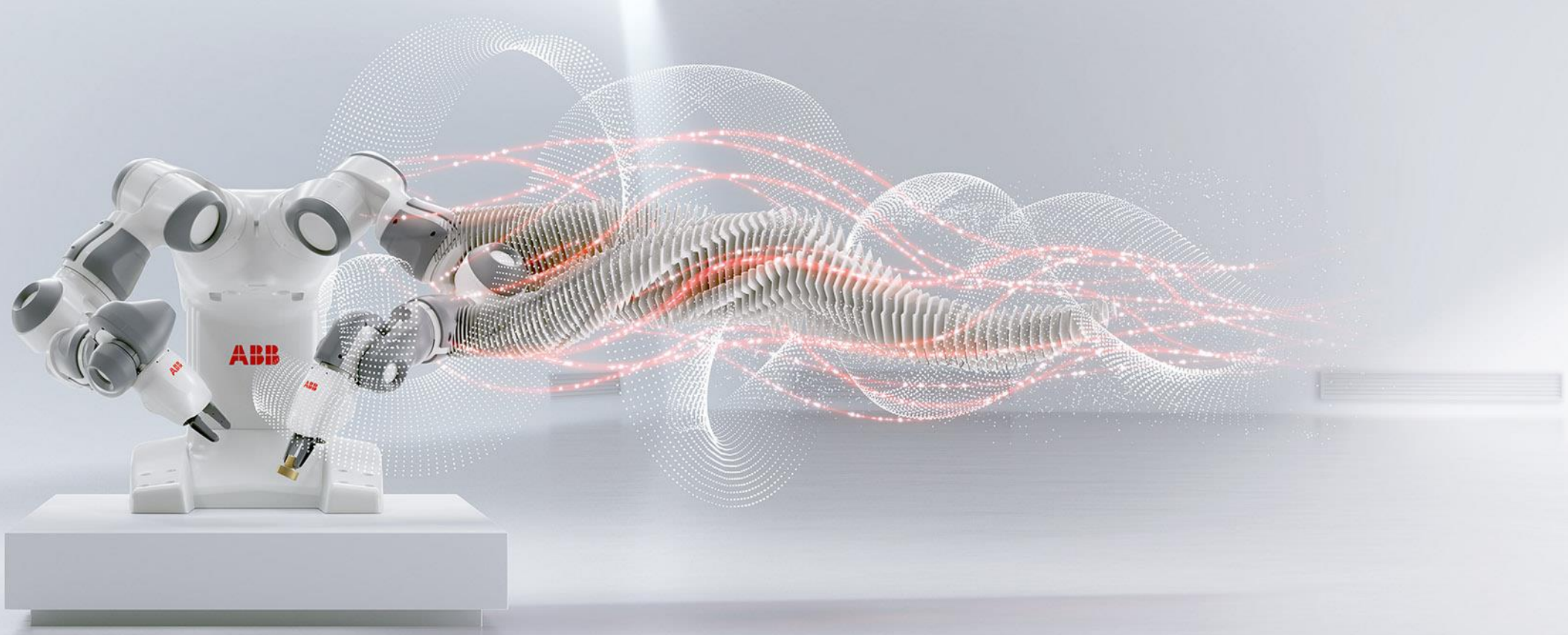

WSU HANDS ON RELAY SCHOOL 2019

Arc Flash Fault

Cause, Effect & Mitigation Strategies

Joe Xavier, Technical Manager – West Region

Arc Flash Fault - Agenda

What is an Arc Flash?

Why and when does Arc Flash occur?

Characteristics and effects of internal Arc Flash

Mitigation strategies

Arc Flash Fault

What is an Arc Flash?

- The result of a rapid release of energy due to an arcing fault between phases, neutral or a ground
- Air is the conductor

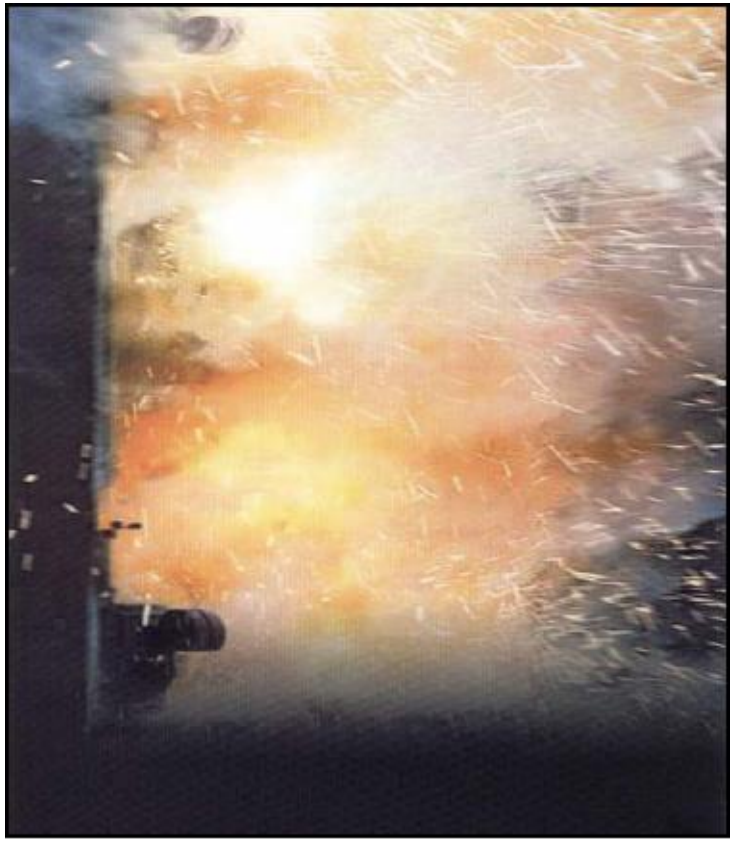

Arc Flash Fault

Staged Arc Flash Event

Arc Flash Fault

Impact of internal arc fault

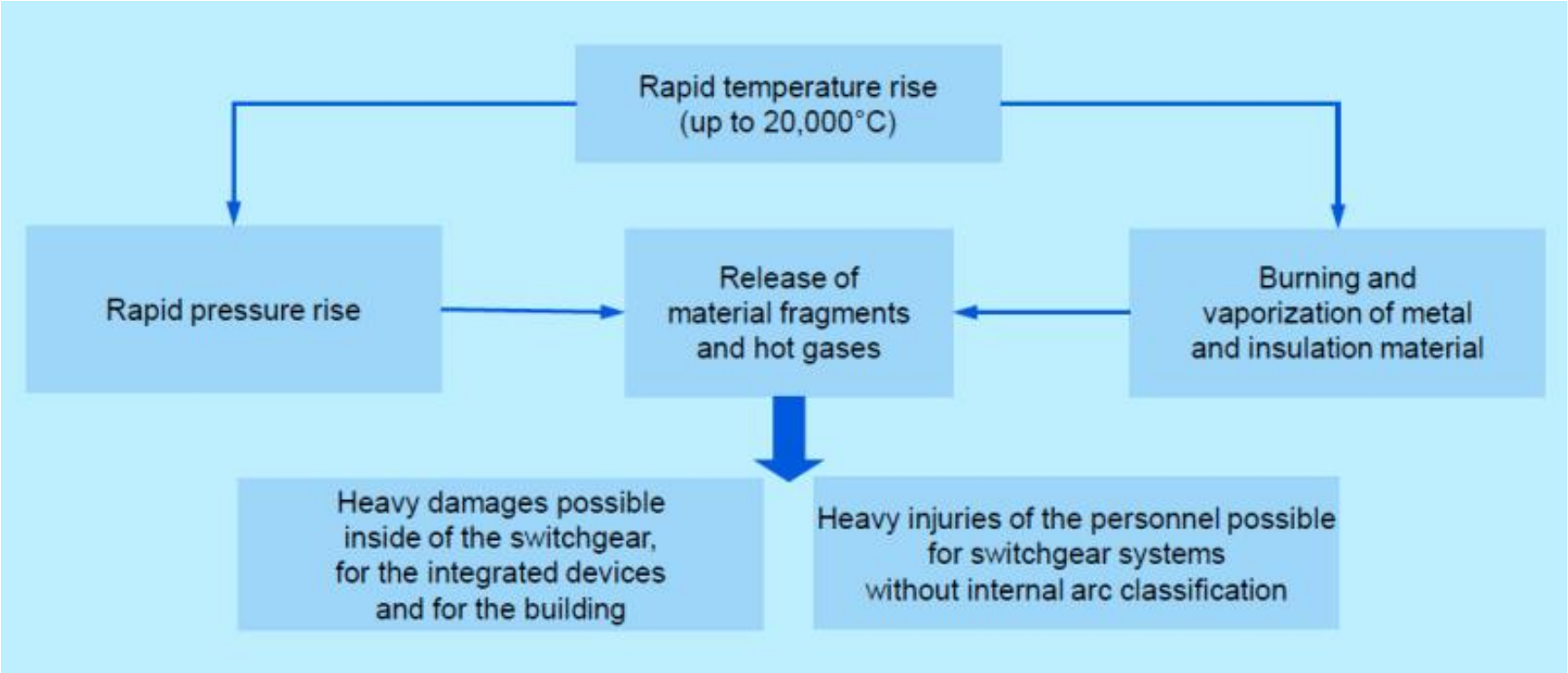

Arc Flash Fault

Impact of internal arc fault

- Electric arcs produce the highest temperatures on earth – up to 35,000 degrees Fahrenheit 4 times temp of the sun.
- The intense heat from arc causes the sudden expansion of air that results in a blast with very strong air pressure.
- All known materials are vaporized at this temperature, Copper expands 67,000 times; Water 1,670 times.

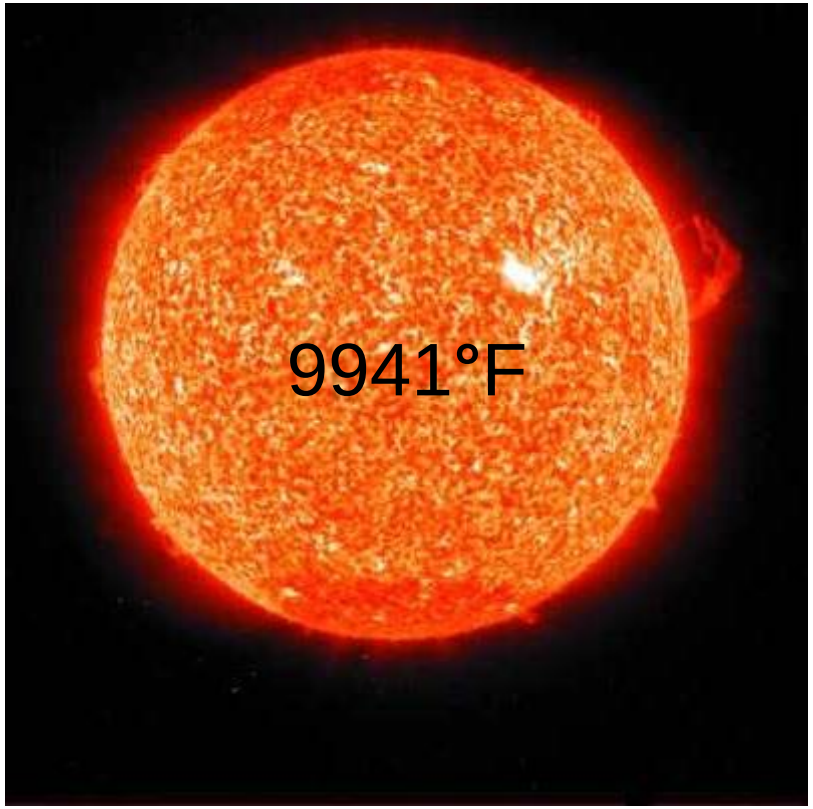

Arc Flash Fault

Impact of internal arc fault

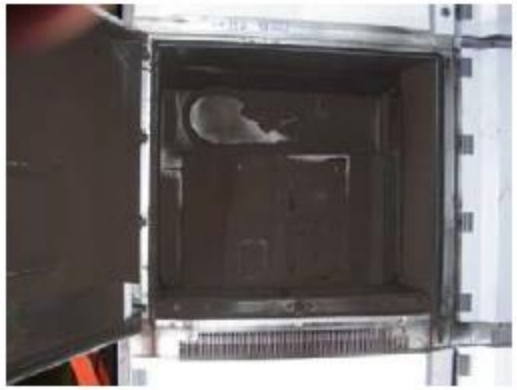

- Circuit-breaker compartment after internal arc impact

- Cable connection compartment after internal arc impact

- Contact terminal after internal arc impact

Arc Flash Fault

When is it likely to happen?

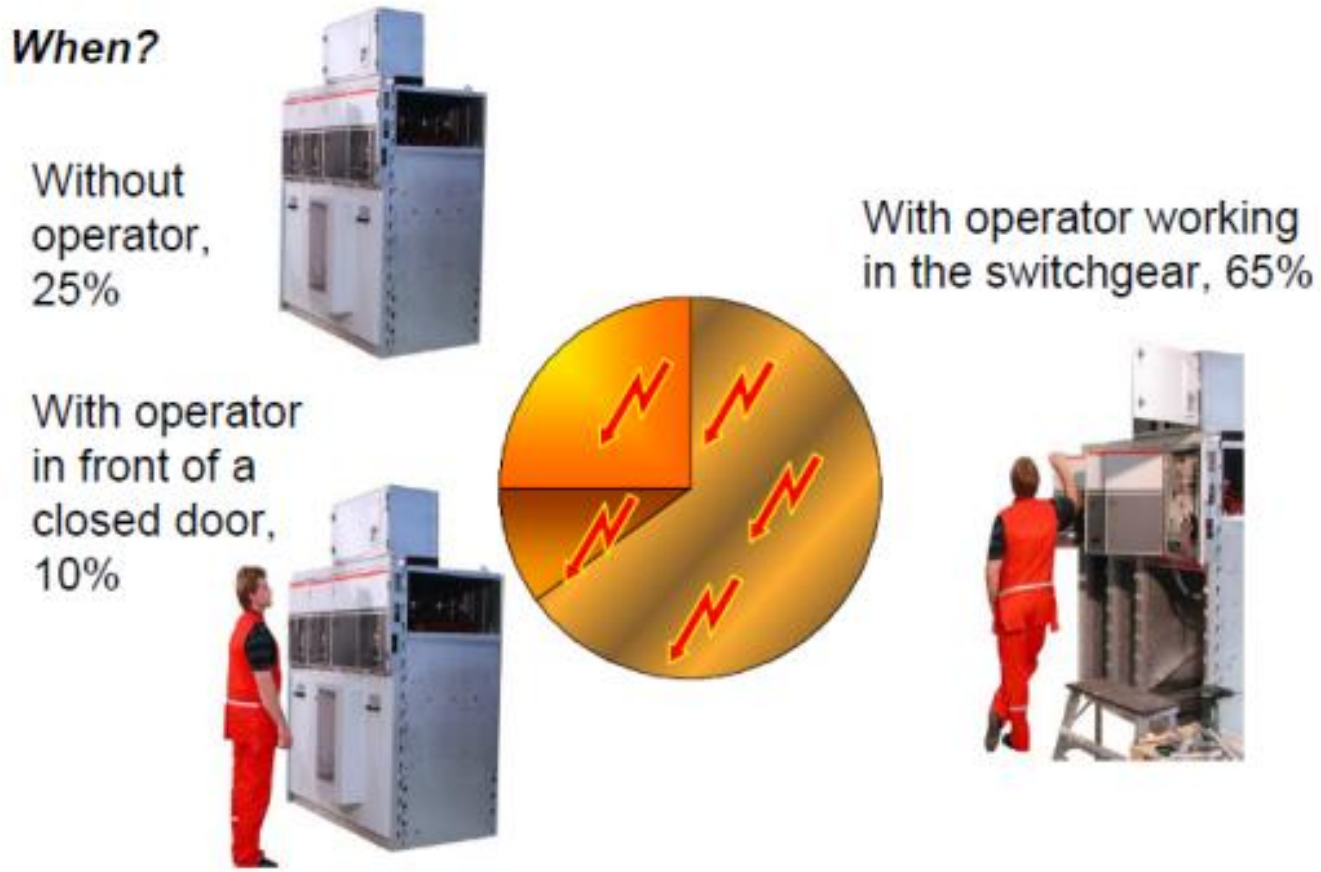

Arcing Incidents Happen

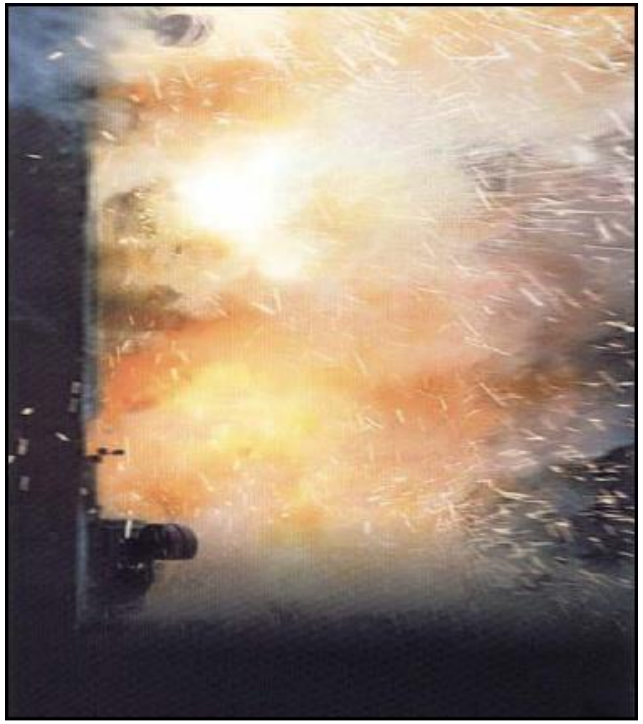

"One large utility has discovered an average of 1 arc-flash injury every 18 months for the past 54 years."

--IEEE Std 1584 – 2002, 10.3

Arcing Incidents Happen

Evolution of standards

1982 - Ralph Lee's Paper, *The Other Electrical Hazard: Electric Arc Blast Burns*

- Brought attention to arc flash hazards
- Until then, focus was on shock hazards. Arc flash concerns were for equipment.

1991 - OSHA acknowledges the hazard

1995 - First included in a standard (NFPA 70E)

(Ref: Ravel Ammerman, et al, Electrical Arcing Phenomena, *IEEE Industry Applications*, May/June 2009)

Arcing Incidents Happen

Since 2015…

Arc Flash analysis

Arc Flash deadlines

Arc Flash hazards

Arc Flash consultants

Arc Flash software

Arc Flash relays and relay schemes

Arc Flash PPE

Arc Flash standards and regulations

Characteristics and Effects of Arc Flash

Key Equations

Determination of Arcing Current

- For voltages below 1 kV

$$\lg I_a = K + 0.662 \lg I_{bf} + 0.0966V + 0.000526G + 0.5588V(\lg I_{bf}) - 0.00304G(\lg I_{bf})$$

- For voltages above 1 kV

$$\lg I_a = 0.00402 + 0.983 \lg I_{bf}$$

$Ia = 10^{\lg(Ia)}$

where…
lg = $\log_{10}$
Ia = arcing current (kA)
K = configuration constant
-0.153 for open configurations
-0.097 for box configurations
Ibf = available bolted three-phase fault current (RMS, kA)
V = system voltage
G = gap between conductors (mm)

Characteristics and Effects of Arc Flash

Key Equations

Determination of Normalized Incident Energy

$$\lg E_n = K_1 + K_2 + 1.081 \lg I_a + 0.0011G$$

$$E_n = 10^{\lg E_n}$$

where…

En = incident energy (cal/cm^2) normalized for time and distance

K1 = configuration constant

-0.792 for open configurations

-0.555 for box configurations

G = the gap between conductors (mm)

E = incident energy (cal/cm^2)

Cf = calculation factor

1.0 for voltages above 1kV

1.5 for voltages at or below 1kV

D = distance from the possible arc point to the person (mm)

x = equipment specific distance exponent factor

Ibf = available three-phase bolted fault current (RMS, kA)

V = system line-line voltage

Characteristics and Effects of Arc Flash

Key Equations

$$E = C_f E_n \left(\frac{t}{0.2} \right) \left(\frac{610^x}{D^x} \right)$$

where…

E_n is the incident energy (cal/cm2) normalized for a specific time and distance from the arc

E is the incident energy (cal/cm2)

C_f is a calculation factor

1.0 for voltages above 1 kV

1.5 for voltages at or below 1kV

t is the arcing time (seconds)

D is the distance from the possible arc point to the person (mm)

x is the equipment specific distance exponent

I_{bf} is the bolted fault current for three-phase faults

V is the system voltage

Arc Flash Mitigation

Most Common Mitigation Strategies

$$E = C_f E_n \left(\frac{t}{0.2}\right)\left(\frac{610^x}{D^x}\right)$$

- Reduce **t** (arcing time)
  - “Maintenance switch” (temporary setting group changes)
  - Communication assisted (GOOSE) protection schemes
  - Optical arc flash relays with sound pressure supervision
  - Optical arc flash relays with current supervision
- Increase **D** (working distance)
  - Extended racking tools
  - Remote racking
- Deflection of arc energy
  - Arc resistant switchgear
- Reduce **Ibf** (available bolted fault current)
  - Electronically triggered fault current limiter (ET-FCL)

Arc Flash Mitigation

Effect of Time – Reducing Arc Duration

Select Equipment Type
- (●) Switchgear
- ( ) Panelboard or MCC (<1000V)

Select Grounding Method
- ( ) Ungrounded or High Resistance Grounded System
- (●) Grounded Systems

Color	Hazard Category	Hazard Range cal/cm^2
	Above 4	Greater than 40
	4	25 to 40
	3	8 to 25
	2	4 to 8
	1	1.2 to 4
	0	Less than 1.2

Voltage (kV)	13.8

Incident Energy Comparisons

Bolted Fault Current (kA)	Arcing Current (kA)	*Incident Energy (cal/cm^2)*										Clearing Time (sec)
		0.10	0.20	0.30	0.40	0.50	0.60	0.70	0.80	0.90	1.00	
10.0	9.7	1.25	2.50	3.75	5.00	6.25	7.51	8.76	10.01	11.26	12.51	
20.0	19.2	2.61	5.23	7.84	10.45	13.06	15.68	18.29	20.90	23.51	26.13	
30.0	28.6	4.02	8.04	12.06	16.08	20.10	24.12	28.14	32.16	36.18	40.20	
40.0	37.9	5.46	10.91	16.37	21.83	27.29	32.74	38.20	43.66	49.12	54.57	
50.0	47.2	6.92	13.84	20.75	27.67	34.59	41.51	48.42	55.34	62.26	69.18	
60.0	56.5	8.40	16.79	25.19	33.59	41.98	50.38	58.78	67.17	75.57	83.97	
70.0	65.7	9.89	19.78	29.67	39.56	49.45	59.35	69.24	79.13	89.02	98.91	
80.0	74.9	11.40	22.80	34.20	45.60	56.99	68.39	79.79	91.19	102.59	113.99	
90.0	84.1	12.92	25.84	38.76	51.67	64.59	77.51	90.43	103.35	116.27	129.19	
100.0	93.3	14.45	28.90	43.35	57.80	72.25	86.69	101.14	115.59	130.04	144.49	

Reference: IEEE Std 1584 “IEEE Guide for Performing Arc-Flash Hazard Calculations”

Arc Flash Mitigation

Typical PPE Suit Requirements

1

2

3

4

Arc Flash Mitigation

Maintenance Switch – Temporary Setting Group

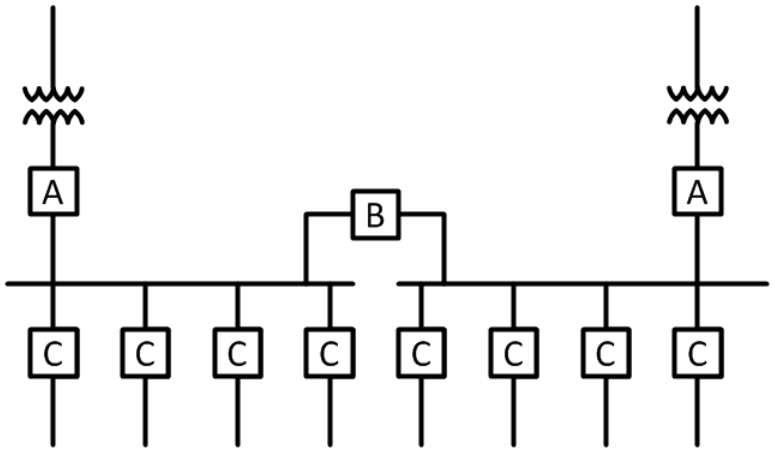

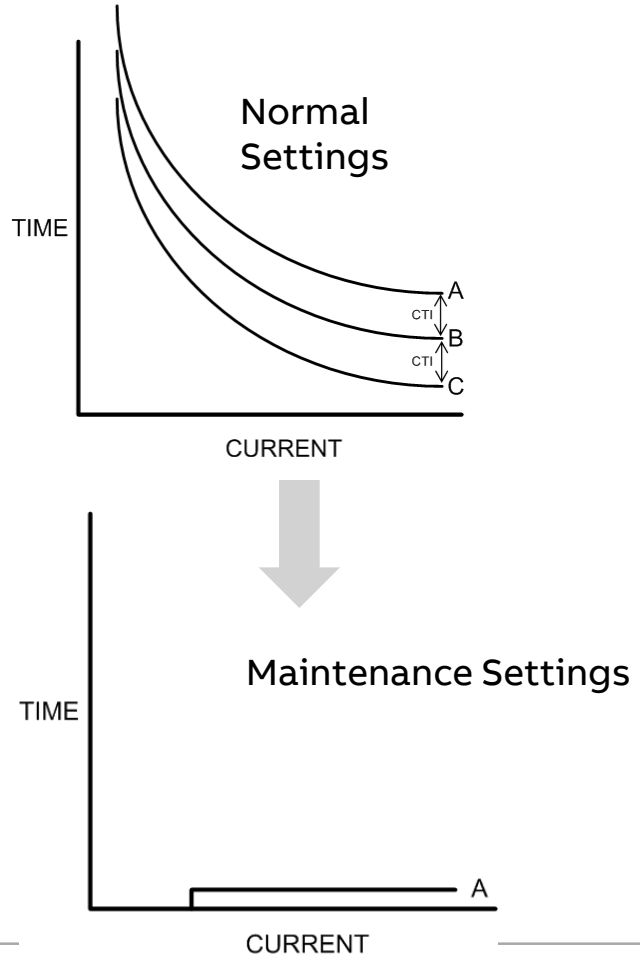

- Maintenance settings are intentionally very sensitive. Normal coordination of protection is abandoned. The entire bus will be cleared for a feeder fault. Relay time is about 25 ms.
- The primary danger is forgetting to return the relay settings to normal after the maintenance work is complete.

Arc Flash Mitigation

GOOSE Blocking Scheme (**G**eneric **O**bject **O**riented **S**ubstation **E**vent)

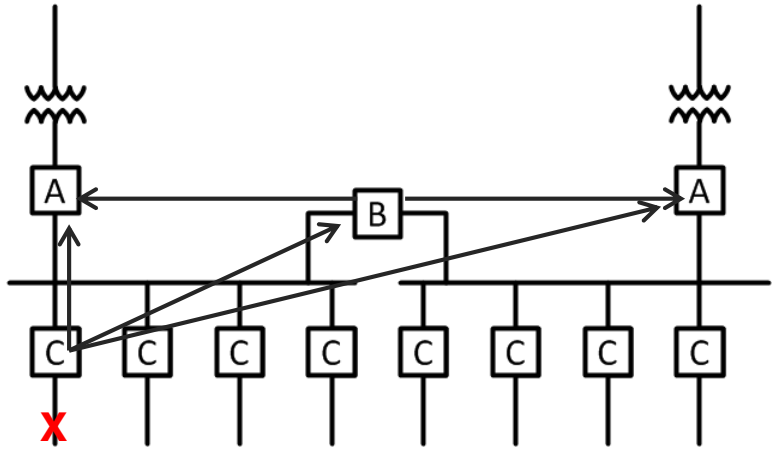

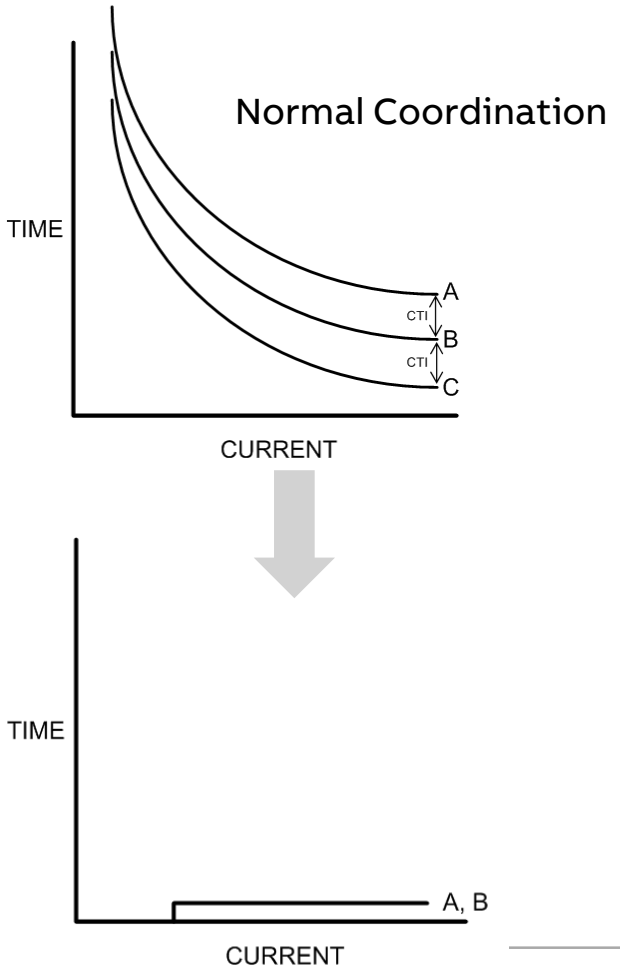

- Blocking signals are sent to all upstream relays that might see the fault.
- If a blocking signal is not received, the relay is allowed to trip.
- All faults between A and C relays can be properly detected in about 20 ms.
- Conventional time coordination can take several tenths of seconds…***a huge difference!***
- ***Several tenths of seconds improvement can reduce arc flash hazards by several categories.***

Arc Flash Mitigation

GOOSE Blocking Scheme (**G**eneric **O**bject **O**riented **S**ubstation **E**vent)

Select Equipment Type
- (●) Switchgear
- ( ) Panelboard or MCC (<1000V)

Select Grounding Method
- ( ) Ungrounded or High Resistance Grounded System
- (●) Grounded Systems

Color	Hazard Category	Hazard Range cal/cm^2
	Above 4	Greater than 40
	4	25 to 40
	3	8 to 25
	2	4 to 8
	1	1.2 to 4
	0	Less than 1.2

Voltage (kV)	13.8

Incident Energy Comparisons

Bolted Fault Current (kA)	Arcing Current (kA)	Incident Energy (cal/cm^2)										Clearing Time (sec)
		0.10	0.20	0.30	0.40	0.50	0.60	0.70	0.80	0.90	1.00	
10.0	9.7	1.25	2.50	3.75	5.00	6.25	7.51	8.76	10.01	11.26	12.51	
20.0	19.2	2.61	5.23	7.84	10.45	13.06	15.68	18.29	20.90	23.51	26.13	
30.0	28.6	4.02	8.04	12.06	16.08	20.10	24.12	28.14	32.16	36.18	40.20	
40.0	37.9	5.46	10.91	16.37	21.83	27.29	32.74	38.20	43.66	49.12	54.57	
50.0	47.2	6.92	13.84	20.75	27.67	34.59	41.51	48.42	55.34	62.26	69.18	
60.0	56.5	8.40	16.79	25.19	33.59	41.98	50.38	58.78	67.17	75.57	83.97	
70.0	65.7	9.89	19.78	29.67	39.56	49.45	59.35	69.24	79.13	89.02	98.91	
80.0	74.9	11.40	22.80	34.20	45.60	56.99	68.39	79.79	91.19	102.59	113.99	
90.0	84.1	12.92	25.84	38.76	51.67	64.59	77.51	90.43	103.35	116.27	129.19	
100.0	93.3	14.45	28.90	43.35	57.80	72.25	86.69	101.14	115.59	130.04	144.49	

Reference: IEEE Std 1584 “IEEE Guide for Performing Arc-Flash Hazard Calculations”

Arc Flash Mitigation

Optical Arc Flash Protection – Light and Sound

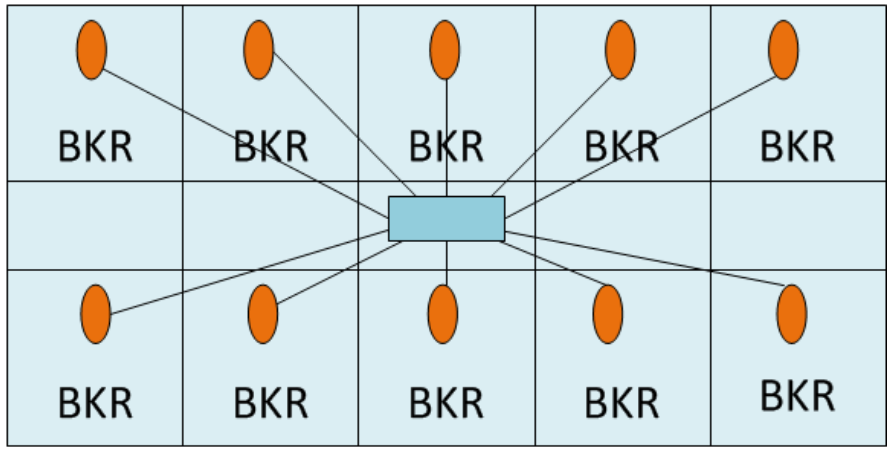

Light and sound pressure sensor with fiber connection to a common relay

- Relay sensing time is about 2-4 ms*
- Sensor placement is critical*
- Testing issues?

Reference: “A Novel Approach for Arc-Flash Detection and Mitigation: At the Speed of Light and Sound”, 2013 Texas A&M Relay Conference

Arc Flash Mitigation

Optical Arc Flash Protection – Light and Current

Continuous fiber light sensor

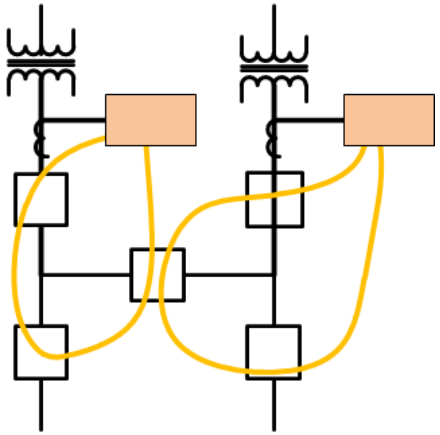

- Relay operating time <2.5 ms
- Can also operate in “light only” mode
- Generally less expensive to install
- Current and light tests are easily done

Arc Flash Mitigation

Effects of Distance – Moving Away from the Arc

Select Equipment Type
- (●) Switchgear
- ( ) Panelboard or MCC (<1000V)

Select Grounding Method
- ( ) Ungrounded or High Resistance Grounded System
- (●) Grounded Systems

Voltage (kV)	13.8

Color	Hazard Category	Hazard Range cal/cm^2
	Above 4	Greater than 40
	4	25 to 40
	3	8 to 25
	2	4 to 8
	1	1.2 to 4
	0	Less than 1.2

Bolted Fault Current (kA)	Arcing Current (kA)	0.40 (Total Clearing Time (sec))	Min. Distance Hazard Level 0 (feet)	Min. Distance Hazard Level 1 (feet)	Min. Distance Hazard Level 2 (feet)	Min. Distance Hazard Level 3 (feet)	Min. Distance Hazard Level 4 (feet)
10.0	9.7	*5.00*	12.95	3.76	NA	NA	NA
20.0	19.2	*10.45*	27.61	8.01	3.93	NA	NA
30.0	28.6	*16.08*	42.99	12.47	6.12	NA	NA
40.0	37.9	*21.83*	58.86	17.08	8.38	NA	NA
50.0	47.2	*27.67*	75.11	21.79	10.69	3.31	NA
60.0	56.5	*33.59*	91.65	26.59	13.04	4.04	NA
70.0	65.7	*39.56*	108.46	31.47	15.43	4.79	NA
80.0	74.9	*45.60*	125.49	36.41	17.86	5.54	3.42
90.0	84.1	*51.67*	142.71	41.41	20.31	6.30	3.88
100.0	93.3	*57.80*	160.11	46.46	22.79	7.06	4.36

cal/cm^2

Reference: IEEE Std 1584 "IEEE Guide for Performing Arc-Flash Hazard Calculations"

Arc Flash Mitigation

Increasing Distance – Extended Racking Tools

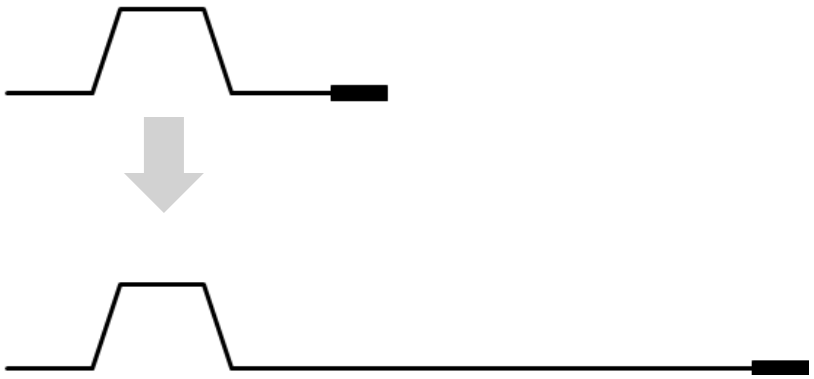

An extra 3 feet cuts the incident energy approximately in half

Arc Flash Mitigation

Increasing Distance – Remote Racking Device

Detachable remote controller

Detachable motor operator

Arc Flash Mitigation

Increasing Distance – Remote Operation of Breakers

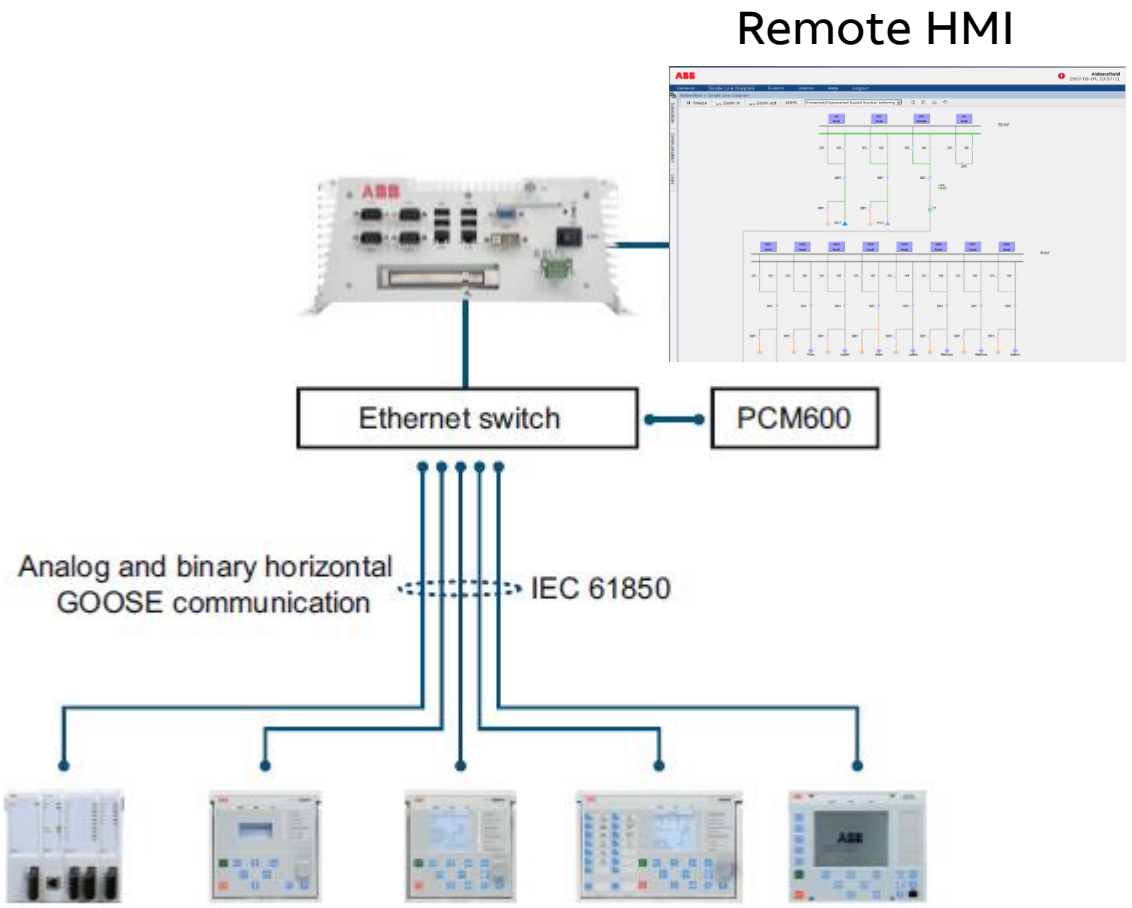

Arc Flash Mitigation

Energy Deflection – Arc Resistant Switchgear

1 - Hinges and flaps designed for controlled venting of over-pressure

2 - Roof-mounted flaps vent excess pressure away from workers

3 - Self-aligning tulip connectors

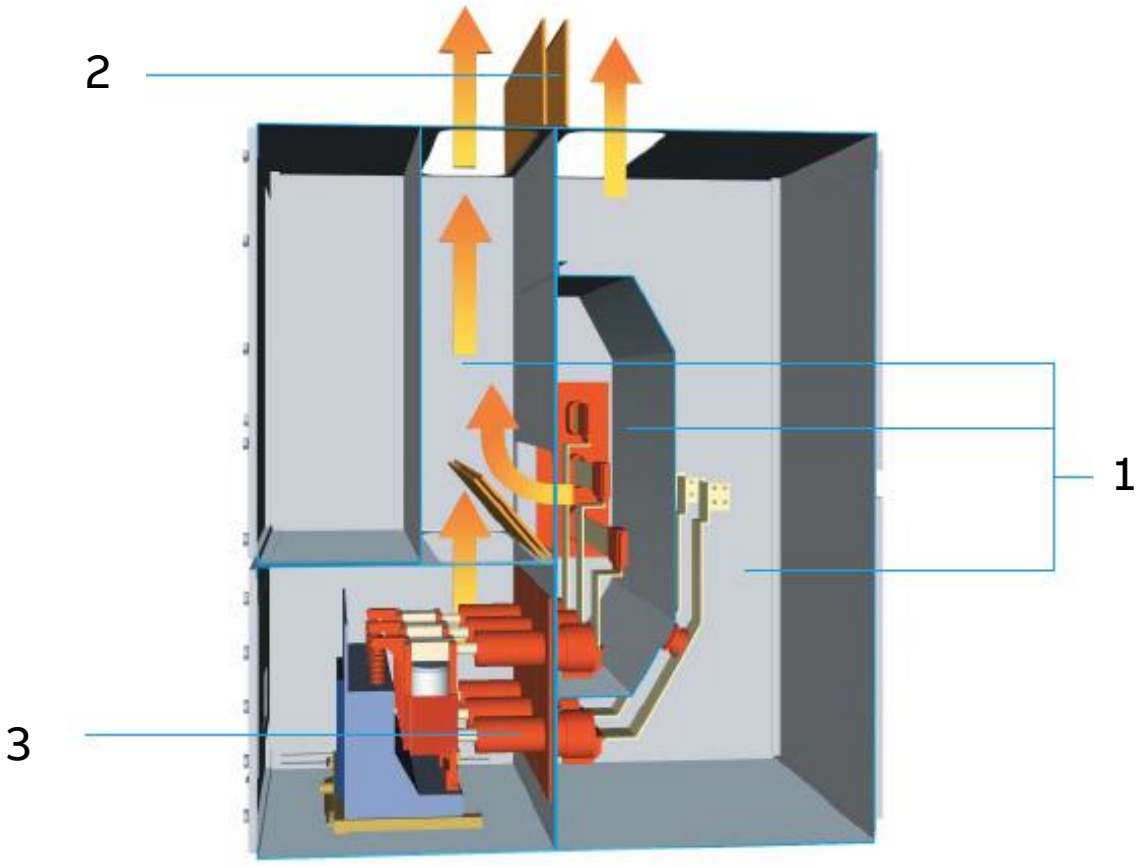

Arc Flash Mitigation

Energy Deflection – Arc Resistant Switchgear

1 - Instrument compartment

2 - Reinforced PT, CPT and breaker doors

3 - Double sidewall construction to resist burn-through

4 - Breaker door window

5 - Closed-door racking

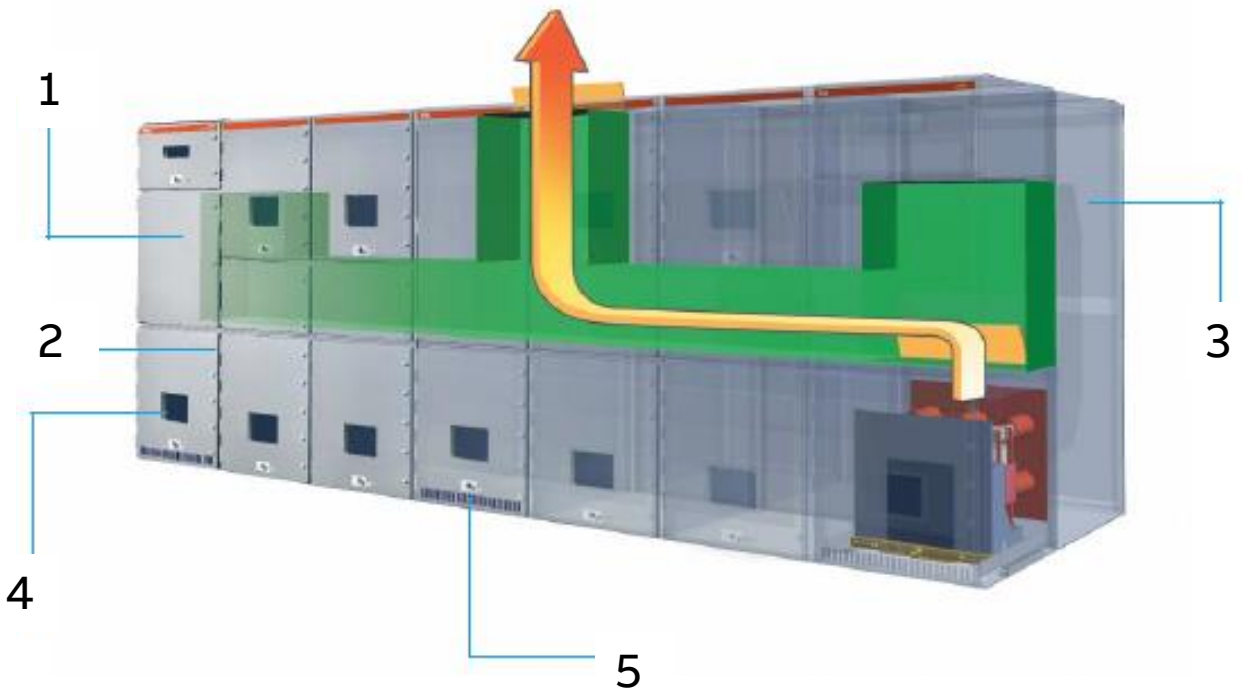

Arc Flash Mitigation

Energy Reduction – Electronically Triggered Fault Current Limter

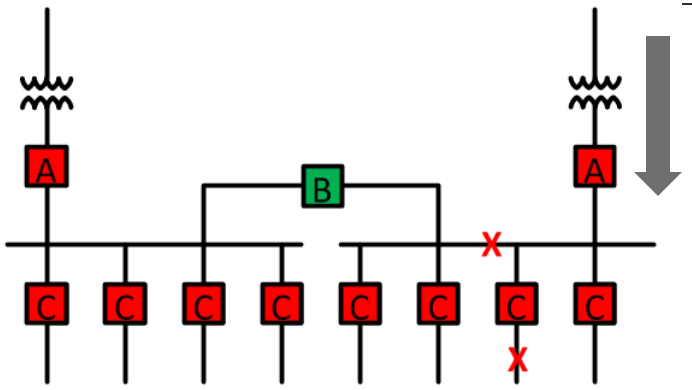

Low fault current but poor regulation

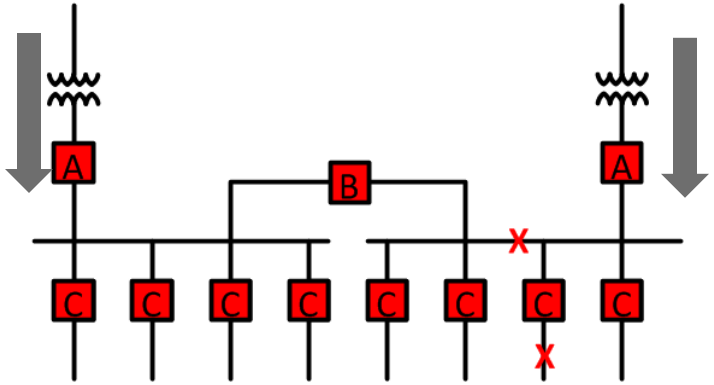

Good regulation but high fault current

Opens immediately, separating the two buses

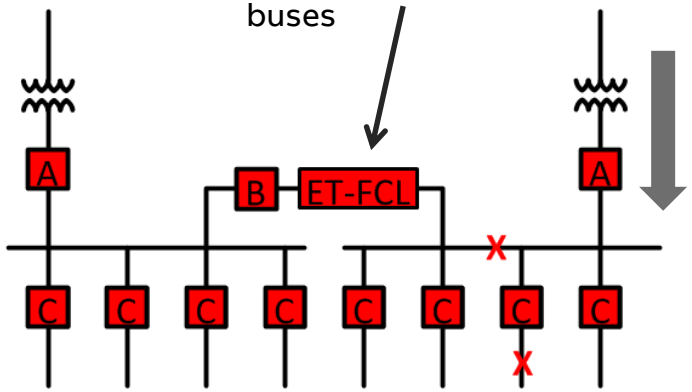

Low fault current and good regulation

Lower fault current means lower arc flash hazard levels

Arc Flash Mitigation

Energy Reduction – High Speed Grounding Switch (HSGS)

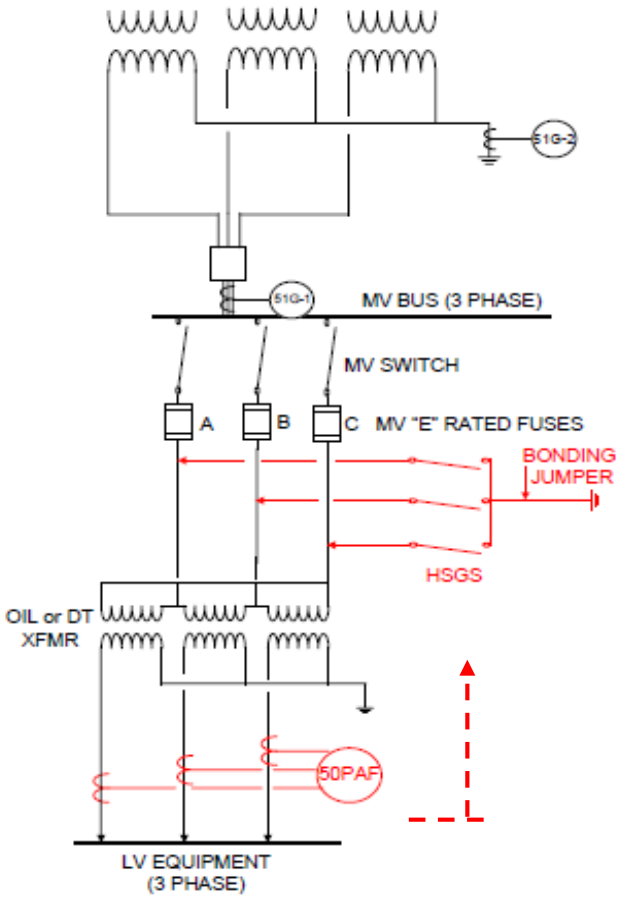

HSGS eliminates arc fault well before the first peak of the fault current which means lower arc flash hazard levels

Arc Flash Mitigation

Comparison of Mitigation Strategies

Method	Pros	Cons	Speed
Maintenance Switch	Simple	Overtrip likely	15-25 ms
	Very low cost	Requires manual activation/de-activation	
	Relatively fast		
GOOSE Blocking	Passive	Requires IEC61850 compliant relays	15-25 ms
	Low cost		
	Relatively fast		
	Can be expanded		
Optical w/ Sound	Passive	Sensor placement critical	2-4 ms
	Very fast	Sound testing?	
	Can be expanded	Sensitivity?	
Optical w/ Current	Passive	Requires care in installation	<2.5 ms
	Very fast		
	Easily tested		
	Can be expanded		
Extended racking tool	Simple	Only impacts racking in/out	NA
	Very low cost	Limited improvement	
Remote racking	Low cost	Only impacts racking in/out	NA
	Large improvement		
Fault Current Limiter	Ultra fast	Relatively high cost	<1 ms
	Fault currents cleared in < 0.5 cycle	Requires system study to establish settings	
	Moderate coordination improvement		

Arc Flash Protection

Summary

- The occurrence of an arc fault is the most serious fault within a switchgear system
- High incident energy levels can cause severe equipment damage, injury to operating personnel and could result in huge loss of revenue due to prolonged outages
- Conducting an Arc flash study determines the incident energy level in the gear and safe operating distance
- Implementing fast operating mitigation solution drastically reduces the risk associated with Arc Flash incidents for the equipment and operating personnel
- It is better to be safe than sorry!

Contact information

If you have further questions, please contact:

Joe Xavier
Technical Manager – West Region

ABB Inc.
Distribution Protection & Automation

Mobile: (972) 567 2378
email: joemoan.i.xavier@us.abb.com

ABB