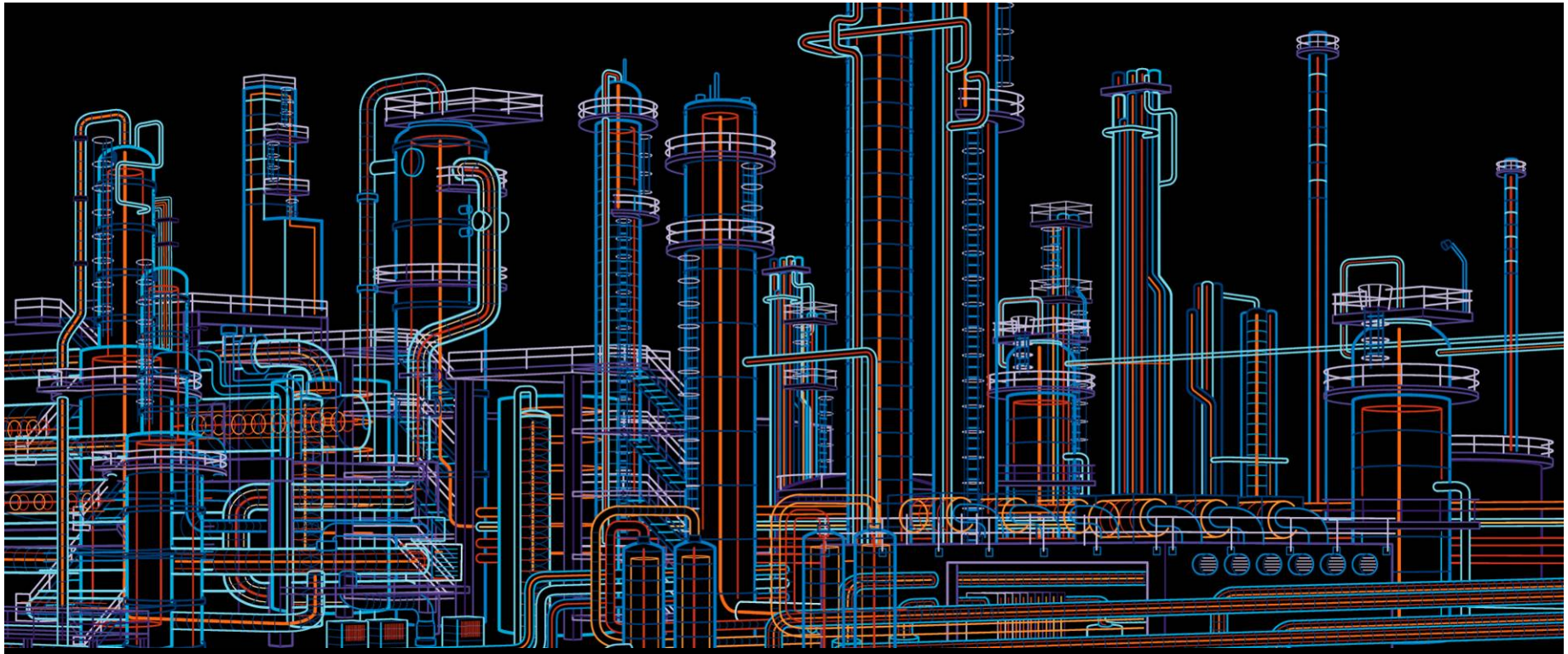

AF Presentation October 2016 Version, By Samy Faried, PE

Arc Flash Regulations and Mitigation Update

© ABB

Power and productivity
for a better world™

- Speaker name: Samy Faried, PE
- Speaker title: Regional Bus. Dev. Manager/ Field Application Engineer
- Company name: ABB
- Location: Ft. Myers, FL
- Telephone Number 239-560-1094

Agenda

I. Electrical Hazards

II. Regulation Changes

III. Highlights of OSHA's Final Rule

IV. ABB Approach for Performing the Arc Flash Study

V. Mitigating Risk Hazards

I. Electrical Hazards

© ABB

I. Electrical Hazards

- **Video:**
  Internal arc test
  50kA / 1s
- **Switchgear**
  <u>without</u> internal arc classification (exemplary)
  Circuit-breaker compartment

Types of Electrical Hazards

- **Electric shock**
  - Prohibitive space (eliminated)
  - Restricted space
  - Limited space

- **Arc flash (Category 1 to 4)**
  - Burns
  - Lethal at 10 feet

- **Arc blast**

© ABB Group

© ABB

Arc Flash – How Big Is the Problem

- Arc flash incidents occur five to ten times daily
- 6,000 Fatal electrical injuries between 1992 and 2013
- 80% of electrical accidents are caused by arc flash / arc blast
- 24,000 Non-fatal electrical Injuries between 1992 and 2013

© ABB
March 13, 2019 Slide 7

Best Way to Understand Arc Flash
How fast; how intense?

Arc Energy = Volts X Amps X Time

© ABB Group

© ABB

Final Rule Forecasted Annual Impact

- 20 lives saved
- 118 serious injuries prevented

Dr. David Michaels

US Dept. of Labor

OSHA

© ABB Group

© ABB

Codes and Standards

- OSHA 29CFR
  - 1910.269 - General Industry
  - 1926 Subpart V - Construction
- NFPA 70 National Electric Code
- NFPA 70E Standard for Electrical Safety in the Workplace
- NESC National Electric Safety Code
- IEEE Standard 1584 Guide for Performing Arc Flash Hazard Calculations

© ABB
March 13, 2019 Slide 10

Regulators' Conflicts

NFPA 70E 2015 "Standard for Electrical Safety in the Workplace"

The new standard includes the following:

1. Elimination of PPE for all well installed and well maintained equipment in closed door operations
2. New tables for arc-rated PPE
3. Table use is limited; calculations emphasized

© ABB
March 13, 2019

Regulation Sense

If the goal is safety of workers and equipment, regulations without the wisdom of experience can be hazardous.

© ABB
March 13, 2019 Slide 12

II. Regulation Changes

Regulation Changes (1 of 2)

A. The new law emphasizes the employer's responsibility.

Example: Rule 1910.269(q)(2)(vii)

Old Rule: Pulling lines and accessories shall be repaired or replaced when defective.

New Rule: The employer shall repair or replace defective pulling lines and accessories.

B. New law is applicable to all construction work.

C. "Utility" is "Host Employer"

D. "Contractor" is "Contract Employer"

E. "Hazard Analysis" is "Risk Assessment" (To be completed by April, 2015)

© ABB
March 13, 2019 Slide 14

Regulation Changes (2 of 2)

F. Use four approved calculation methods for incident energy.

G. Arc rated head and face protection is required for

≥ 9 Cal/cm^2 single-phase open air

≥ 5 Cal/cm^2 three-phase.

H. Foot protection is required.

© ABB

Example of Final Rule Changes

Exposure	Minimum Head and Face Protection		
	None*	Arc-Rated Faceshield with a Minimum Rating of 8 cal/cm²*	Arc-Rated Hood or Faceshield with Balaclava
Single-phase, open air	2 – 8 cal/cm²	9 – 12 cal/cm²	13 cal/cm² or higher†
Three-phase	2 – 4 cal/cm²	5 – 8 cal/cm²	9 cal/cm² or higher‡

*These ranges assume that employees are wearing hardhats meeting the specifications in §1910.135 or §1926.100(b)(2), as applicable.

†The arc rating must be a minimum of 4 cal/cm² less than the estimated incident energy. Note that §1910.269(l)(8)(v)(E) permits this type of head and face protection, with a minimum arc rating of 4 cal/cm² less than the estimated incident energy, at any incident energy level.

‡Note that §1910.269(l)(8)(v) permits this type of head and face protection at any incident energy level.

© ABB
March 13, 2019

III. Highlights of OSHA's Final Rule

Final Rule Became Law July 10, 2014

1. General training determined by risk (Required every 3 years, NFPA 70E - 2015)
2. Host employers and contractor employers
3. Fall protection (April, 2015)
4. Minimum approach distance and insulation (April, 2015)
5. Protection from flames and electric arc hazard (April, 2015) study:
   Employers MUST estimate incident energy based on specific calculation methods, and must provide protective equipment.
6. Deenergizing T&D lines and equipment
   Multiple crew coordinate under a single leader
7. Protective grounding for deenergized lines

Final Rule Became Law July 10, 2014
Four methods for calculating incident energies

1. NFPA 70E, Annex D 2012
2. “Predicting Incident Energy to Better Manage the Electric Arc Hazard on 600 V Power Distribution Systems” Doughty, T.E.. Neal & Floyd II
3. IEEE 1584-2002, 1584a-2004 & 1584b-2011
4. ARCPRO, commercial software (Kinectrics, Inc.)

© ABB
March 13, 2019 Slide 19

IV. ABB Approach For Performing Arc Flash Studies

1. Data, Existing Models, and Information Collection

- Existing models for generation, transmission, and distribution systems.
- One lines diagrams and layouts for substations.
- Existing and proposed load data.
- Equipment specifications and rating.
- Impedances of transformers, cables, etc.
- Protective system specifications and clearing time.

© ABB

2. Modeling and Analysis

- Identify utility and generation power sources and characteristics.
- Create the system model showing power sources, transmission and distribution interconnection.
- Calculate short circuit momentary and interrupting currents.
- Identify protective equipment and coordination study for the facilities.
- Provide all relay types, CT ratios, manufacturers, and settings.
- Define operating scenarios for tie breakers open/closed.
- Determine in cooperation with client any assumptions regarding missing information.
- Perform arc flash study hazard analysis.

3. Quantifying Hazard Levels & Client Practice

- Perform arc flash hazard analysis according to existing regulations including IEEE 1584.
- Retrieve short circuit calculations and clearing times of phase over current devices.
- Calculate incident energy and arc flash protection boundaries at all significant locations where work could be performed on energized parts.
- Specify safe working distances based on calculated arc flash boundary (incident energy less than 1.2 Cal/cm2.
- Discuss client practice and interview operation and maintenance personnel.
- Recommend personal protective equipment, training, safe practice, labels, and arc flash labels.

4. Deliverable Report and Recommendations

- Collected data and assumptions
- Coordination study and protective device settings
- Incident energy and arc flash boundaries
- Determine adequacy of existing breakers, relay and protective device settings and providing mitigating solutions recommendations.
- Providing required warning labels

© ABB

V. Mitigating Risk Hazards

© ABB

Single line diagram – Where to install AF mitigating devices

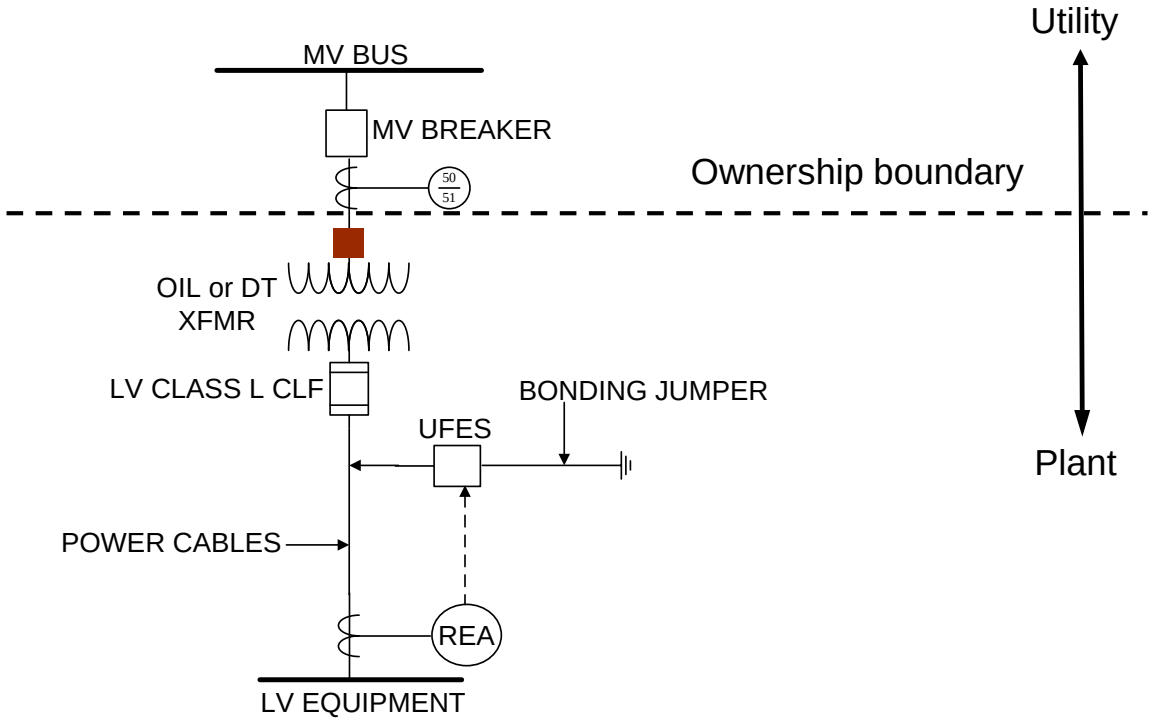

Arc Energy = Volts X Amps X Time

Four methods for controlling risks

1. Reduce fault current or reduce arc voltage
2. Reduce duration of the arc (clearing time)
3. Increase working distance
4. Minimize personnel exposure/presence

© ABB

1. Reducing Fault Current

Reducing fault current is difficult after system is in place, but there are some changes that can be made

- For a new design: Reduce transformer size and/or increase transformer impedance
- Deploy electronically actuated current limiters
- Install current-limiting fuses
- Install current-limiting reactors

© ABB
March 13, 2019 Slide 28

IEEE 1584 Guide Equations – Arcing Current

- For System Voltages below 1kV the following equation is solved:

$$\log_{10} I_a = K+0.622\log_{10}I_{bf}+0.0966V+0.000526G+0.5588V(\log_{10}I_{bf})-0.00304G(\log_{10}I_{bf})$$

- For System Voltages of 1kV and higher the following equation is solved:

$$\log_{10} I_a = 0.00402+0.983\log_{10}I_{bf}$$

- Where:
  - I_a = Arcing Current in kA
  - G = Conductor Gap in mm, (typical values provided in IEEE 1584 Guide)
  - K = -0.153 for open air arcs, -0.097 for arc in a box
  - V = System Voltage in kV
  - I_{bf} = bolted three-phase fault current kA, rms symmetrical

IEEE 1584 Guide Equations – Normalized Incident Energy

- So now that we have determined the Arcing Current, let's look at the Incident Energy Equation at working distance (normalized at 24 Inches) for an arc time of 0.2 seconds

$$\log_{10} E_n = K_1 + K_2 + 1.081 \log_{10} I_a + 0.0011G$$

- Where:

E_n = Incident Energy in J/cm^2 normalized for time and distance

C_f = Calculation factor = 1.0 for voltages above 1 kV, 1.5 at or below 1kV

K_1 = -0.153 for open air arcs, -0.097 for arc in a box

K_2 = 0 for ungrounded systems and -0.0113 for grounded systems

G = Conductor Gap in mm, (typical values provided in IEEE 1584 Guide)

IEEE 1584 Guide Equations – Incident Energy (continued)

- Conversion from normalized values gives the Equation:

$$E = 4.184 C_f E_n (t/0.2)(610^x/D^x)$$

- Where:

E = Incident Energy in J/cm^2

C_f = Calculation factor = 1.0 for voltages above 1 kV, 1.5 at or below 1kV

t = Arcing time in seconds

D = Distance from the arc to the person, working distance from IEEE 1584

x = Distance Exponent from IEEE 1584 factors for equipment

© ABB

IEEE 1584 Guide Equations – Arc Flash Boundary

- Calculate the Arc Flash Protection Boundary:

$$D_B = (4.184C_fE_n(t/0.2)(610^x/E_B))^{1/x}$$

- Where:

D_B = Arc Flash Protection Boundary

E_B = Incident Energy in J/cm^2 at the distance of the arc flash protection boundary, which is set at 5 J/cm^2 (1.2 Cal/cm^2) for bare skin (no hood) or at the rating of the proposed PPE

© ABB

Electronically Triggered Fault Current Limiters (ET-FCL)

- The ET-FCL is a fast operating interrupting device (intelligent switch) that limits the short circuit current to a level that breakers and buses can withstand, therefore protecting them from damage.
  - 0.6 ms peak current limiting time at first current rise
  - 1/27th of a cycle => Warp speed!
  - Comparison: MPR's instantaneous relay is 1.0 cycle; standard 3 cycle breaker => 4 cycles of fault current
  - Bow & arrow vs. rifle shot

ET-FCL, 15kV, 3000A on Roll-in Truck

© ABB

ET-FCL
Single pole cut-away

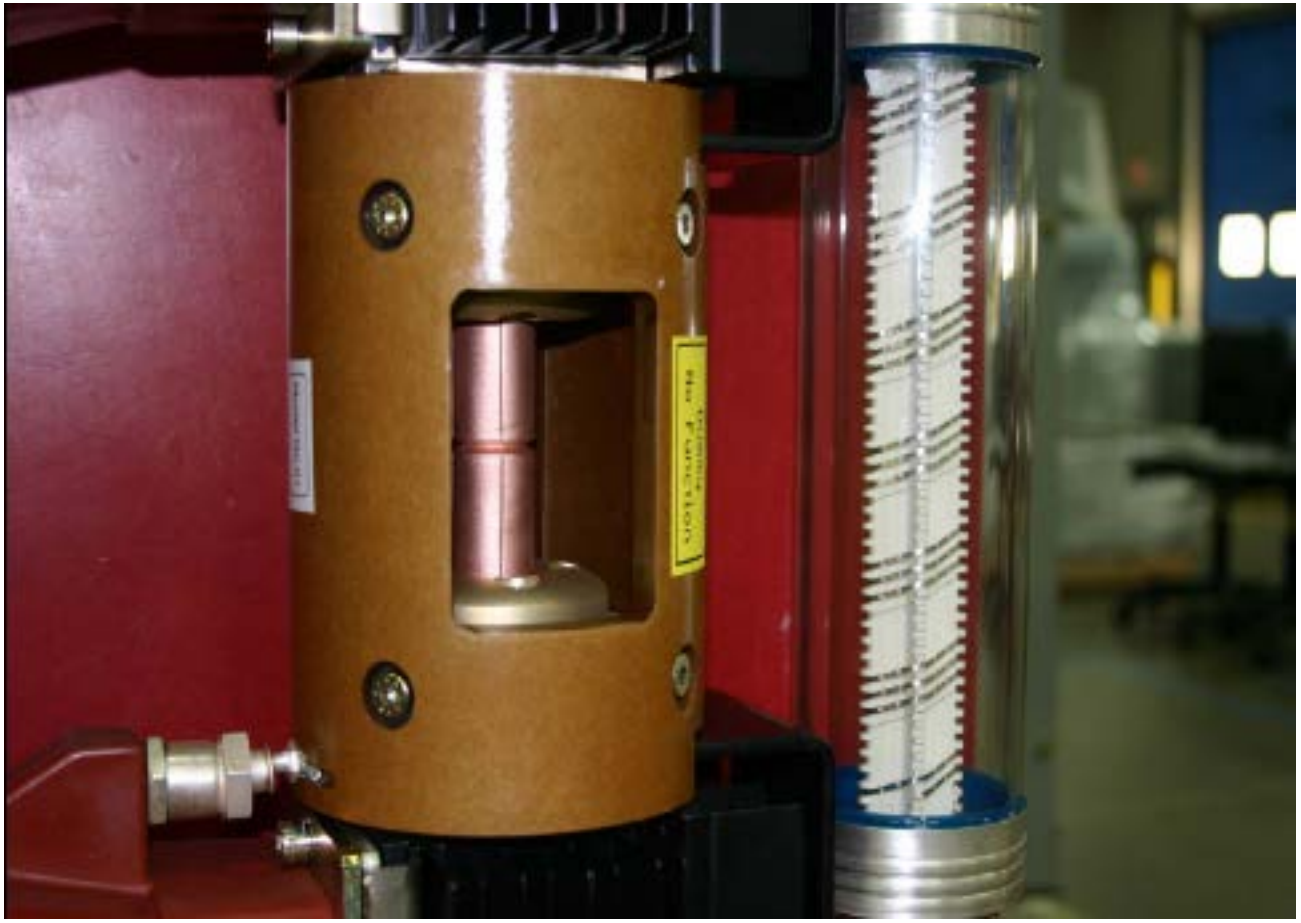

ET-FCL: single pole cut away
After bursting bridge

© ABB

ET-FCL – How It Works

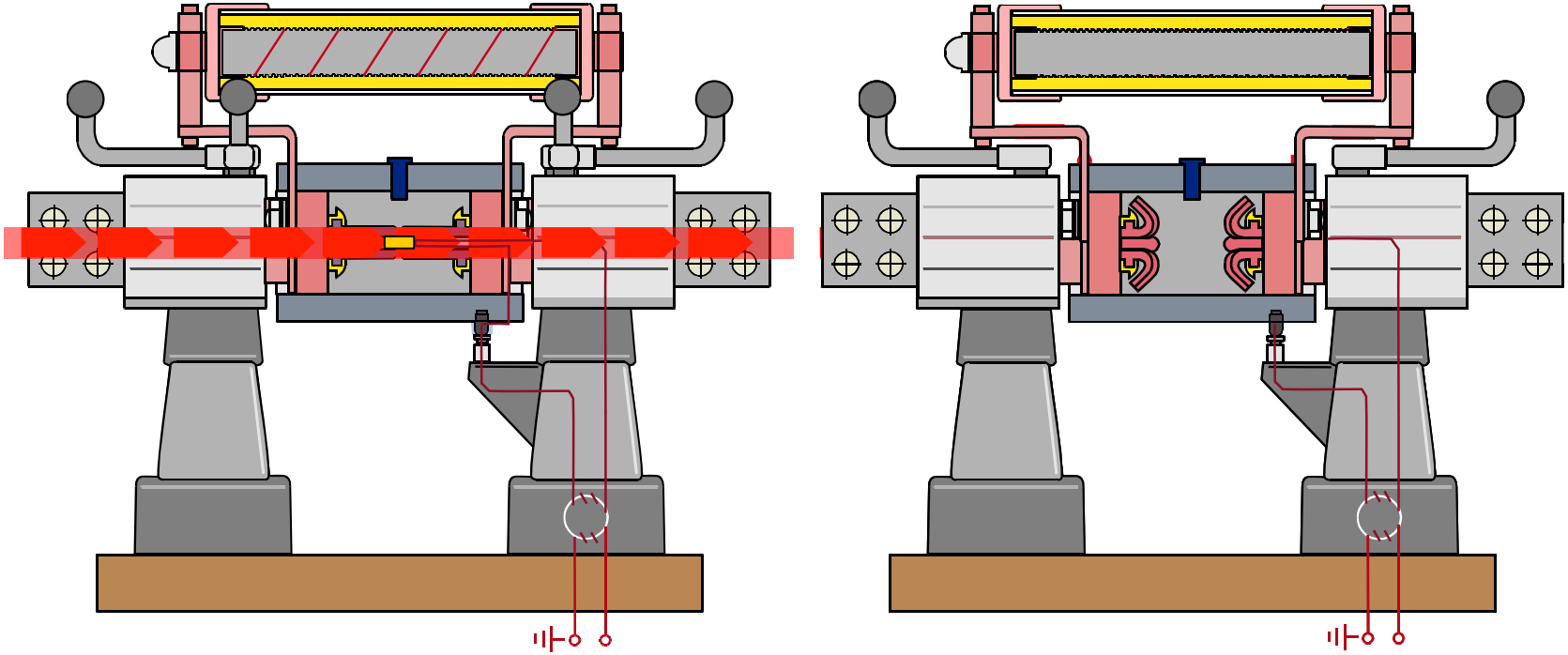

© ABB

Ratings

Rated Voltage	Rated Current* (FLA)	Switching Capability (RMS)
0.75 kV	. . . 5000 A	. . . 140 kA
12.00 kV	. . . 4000 A	. . . 210 kA
17.50 kV	. . . 4000 A	. . . 210 kA
24.00 kV	. . . 3000 A	. . . 140 kA
36.00 kV	. . . 2500 A	. . . 140 kA
40.50 kV	. . . 2500 A	. . . 140 kA

***For higher rated currents, I_S-limiters can be connected in parallel**

Short Circuit vs. Over Current

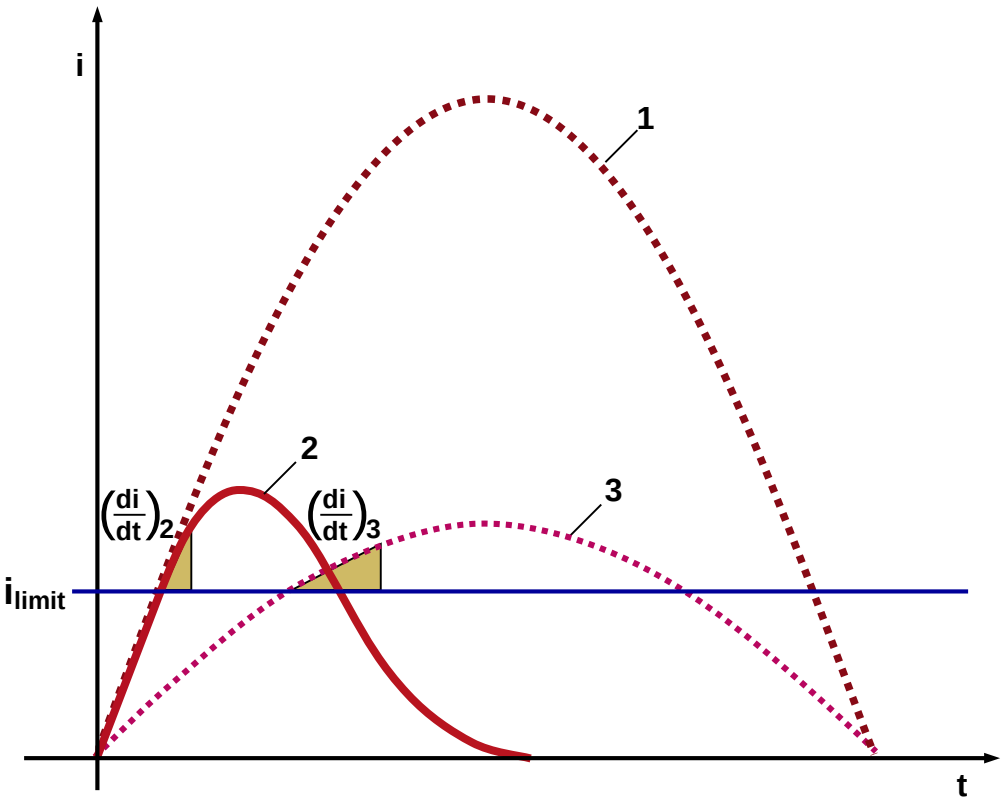

1. Short-circuit current without ET-FCL
2. Short-circuit current – ET-FCL tripped
3. Over current – ET-FCL NOT tripped

Trip Timing

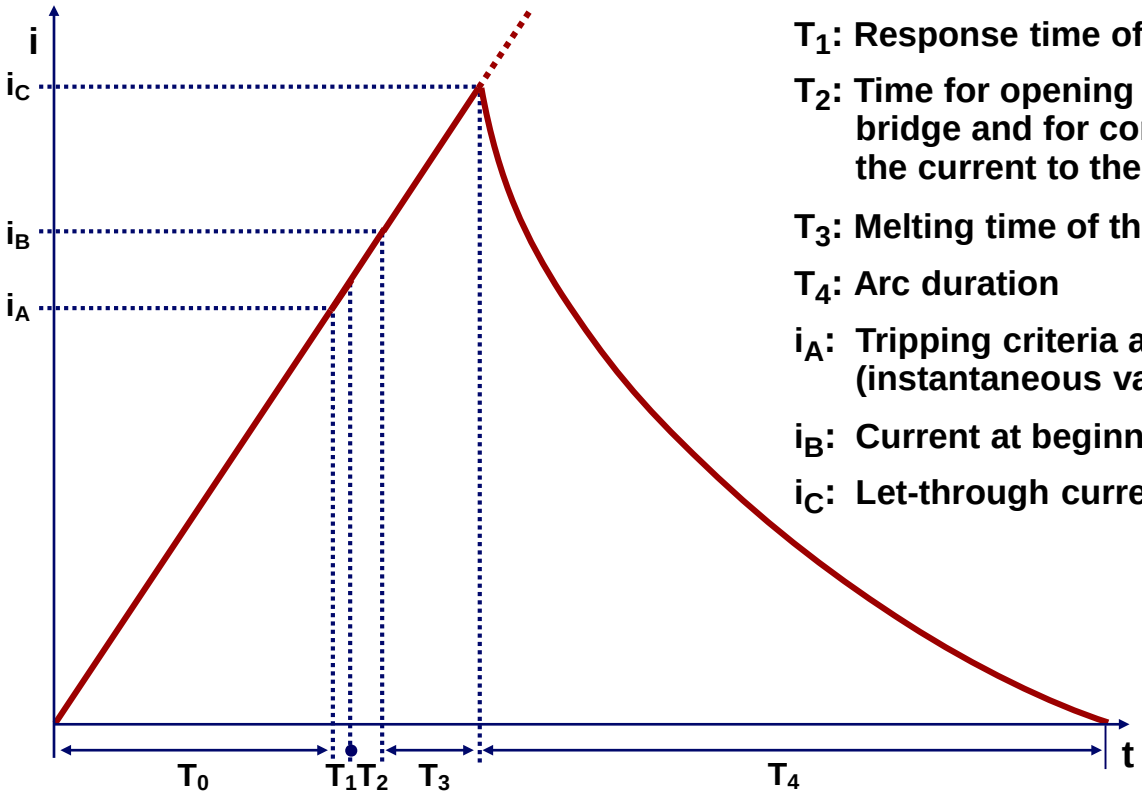

T_0: Reaching time for tripping criteria (instantaneous value and di/dt).

T_1: Response time of the electronic approx. 15 µs

T_2: Time for opening the bursting bridge and for commutating the current to the fuse element approx. 85 µs

T_3: Melting time of the fuse element approx. 500 µs

T_4: Arc duration

i_A: Tripping criteria are reached (instantaneous value and di/dt).

i_B: Current at beginning of fuse element's melting

i_C: Let-through current

Main-Tie-Main System Application

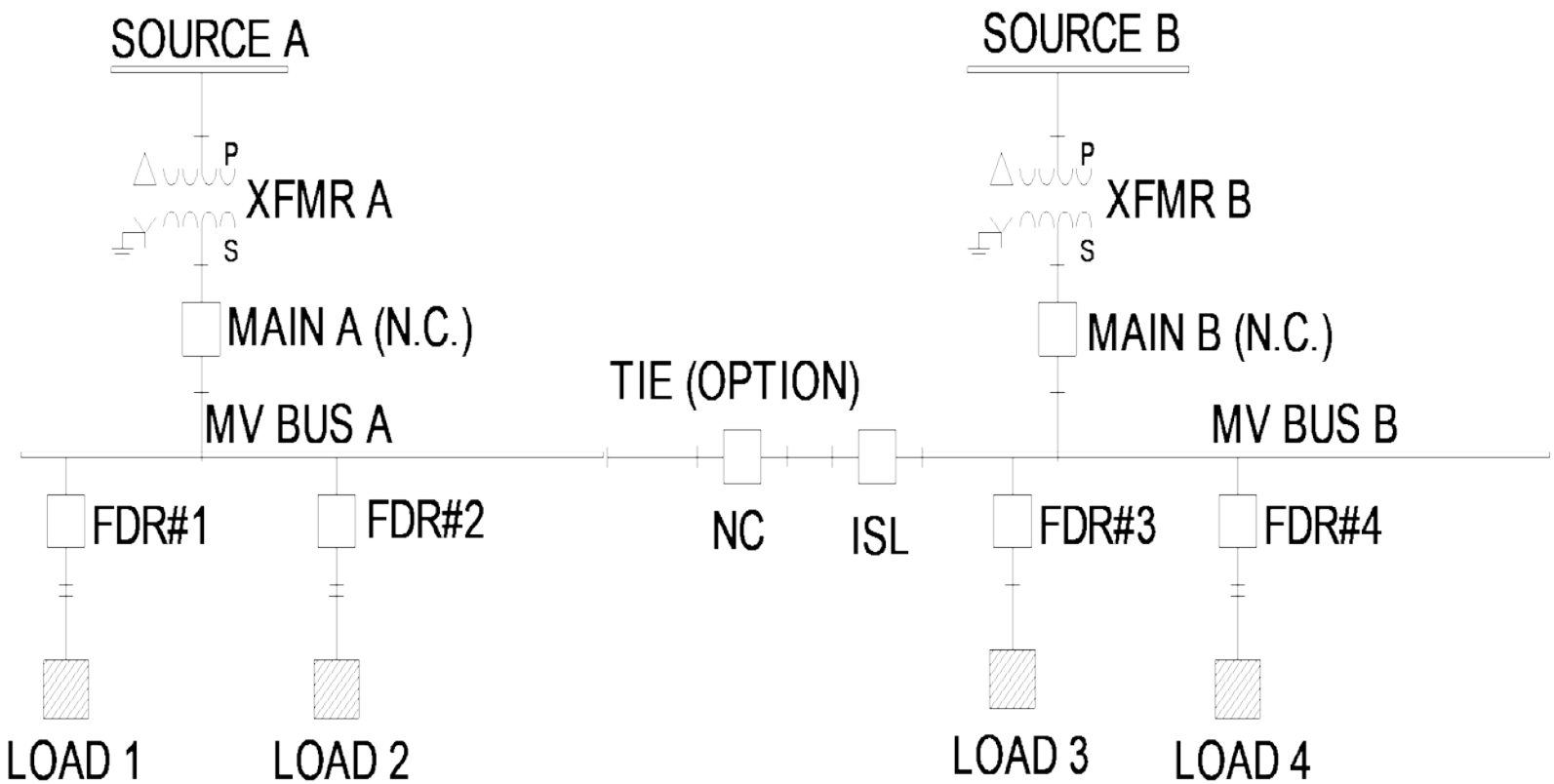

Notes: All mains and ties are operated normally closed
ET-FCL set to protect all feeder breakers
Three winding sources are also applicable

ET-FCL + MV Switchgear “System-Wide” Solutions

- Construction cost reduction tool (MV cable size reduction; lower cost switchgear; lower CT class applied; smaller switchgear footprint; possible smaller building)
- A voltage regulation device
- Protective relay coordination improvements
- Tighter protection systems via adjusting protective relay time dials
- Ease of large MV motor starting; questionable need for MV soft starters
- Harmonic mitigation
- Arc flash mitigation device
- Full, MVA rated, N-1, MV bounceless transfer system
- Inter-buss disturbance immunity
- Synchronous motor stability improvement
- *All solutions available in the same time frame; marginal tradeoffs between them*

Advantages of Current Limiters

- Construction cost reduction tool (MV cable size reduction; lower cost switchgear; lower CT class applied; smaller switchgear footprint; possible smaller building)
- Arc flash mitigation device
- A voltage regulation device; Full, MVA rated, N-1, MV bounceless transfer system; Interbuss disturbance immunity; Sync motor stability improvement
- Harmonic mitigation

Grounding Switches (UFES)
Application description

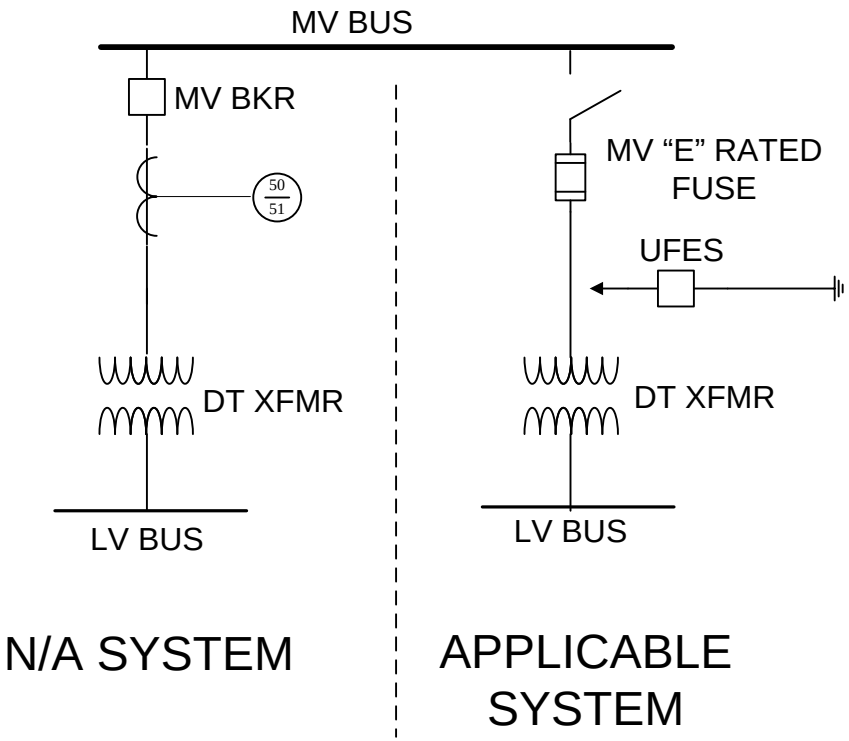

Application with a primary MV fused switch, a fast acting earthing switch can be applied at <u>any</u> location between the fuse's load side and the transformer's primary connection. Can operate as fast as 4 ms, therefore magnitude of the LV fault level **<u>can potentially be</u>** HRC-1

Ultra-Fast Earthing Switch type UFES
Example of an application UFES + REA

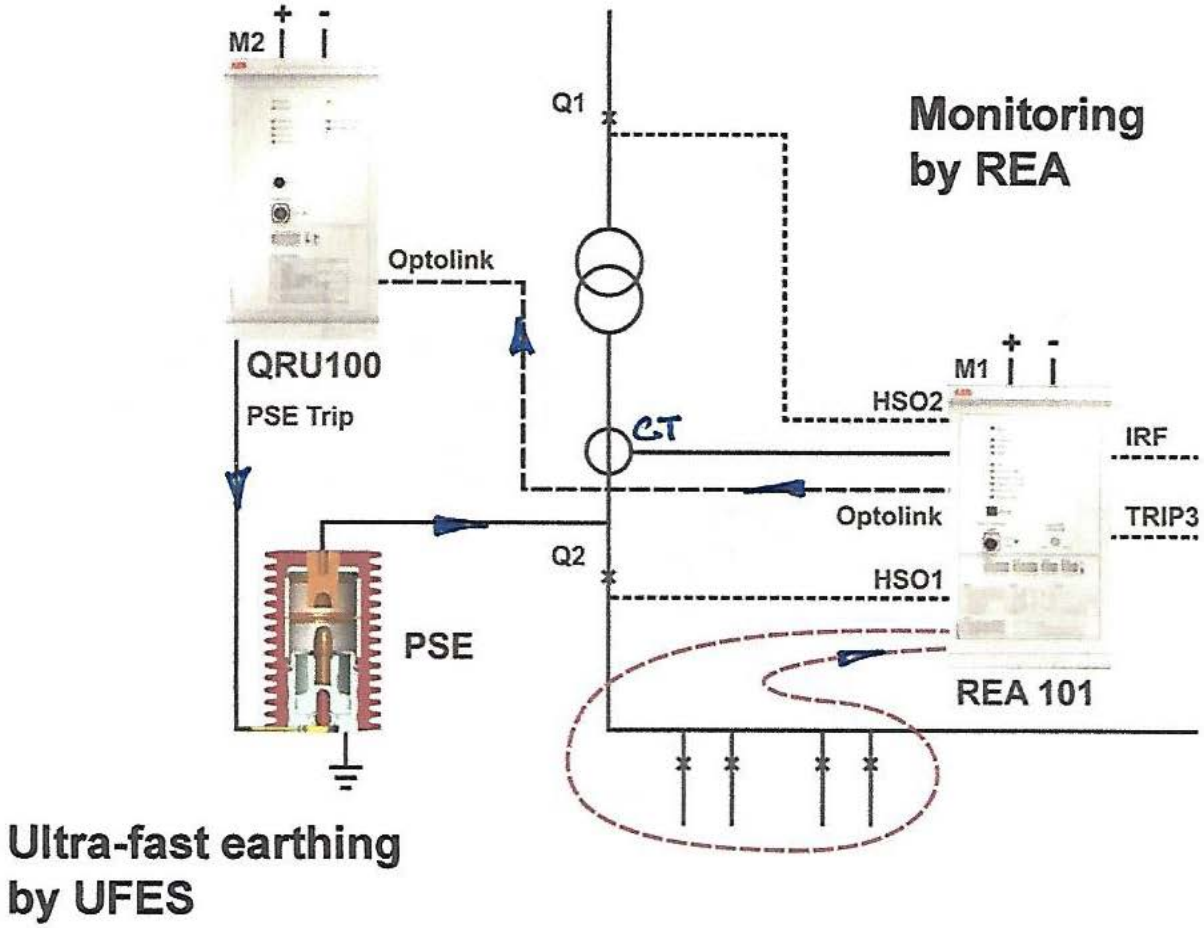

Power and productivity
for a better world™

Three line diagram - MV solution

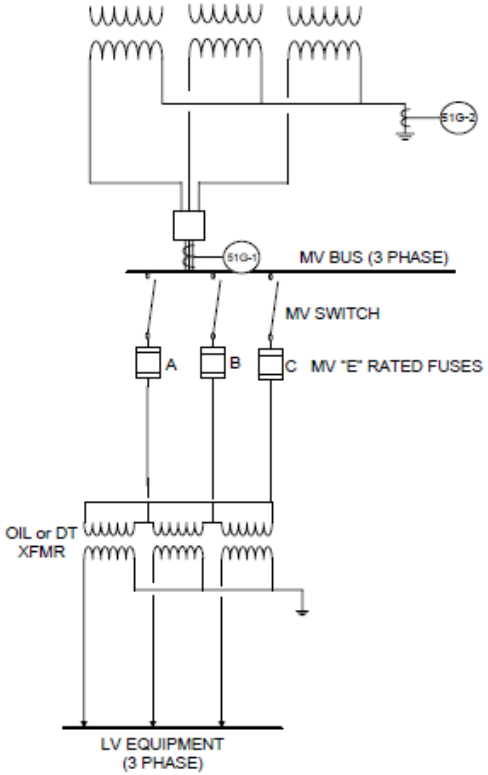

Three line diagram - MV solutior

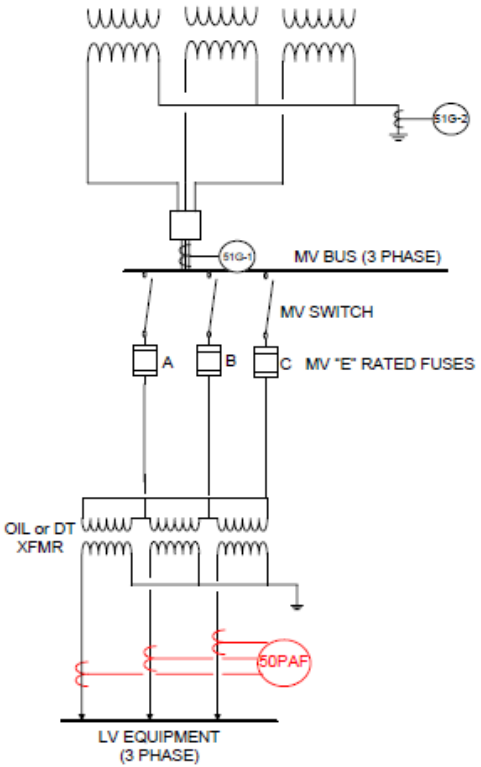

Three line diagram - MV solution

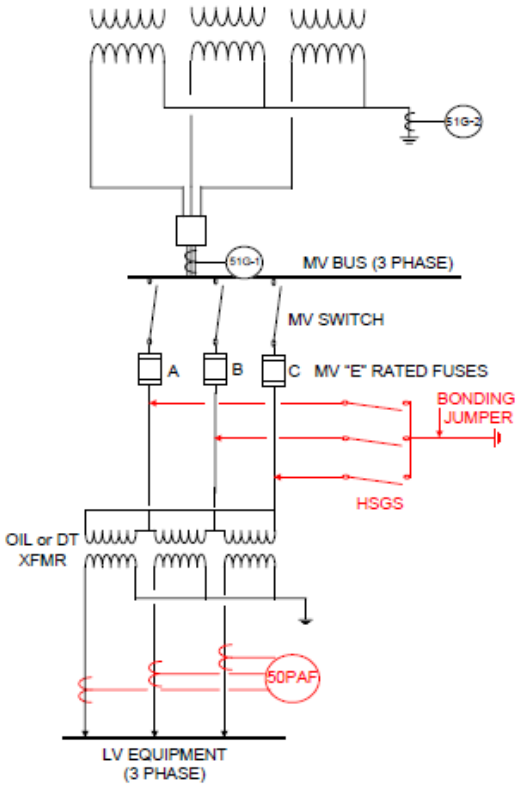

Three line diagram - MV solution

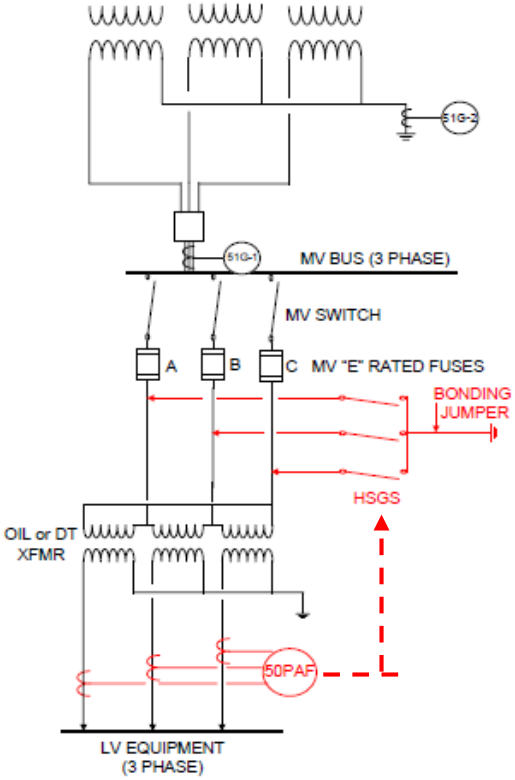

Light Detection Protection

- Light detection protection is based on both optical light and phase overcurrent or ground overcurrent.
- It uses fiber optics technology to sense the light flash and enable very short clearing times (AND/OR) technology.
- Since many arc faults start as a single phase fault, the neutral current should be measured. This results in clearing the fault in early stages.

© ABB

Arc Flash Detection Relay
Application example – feeder

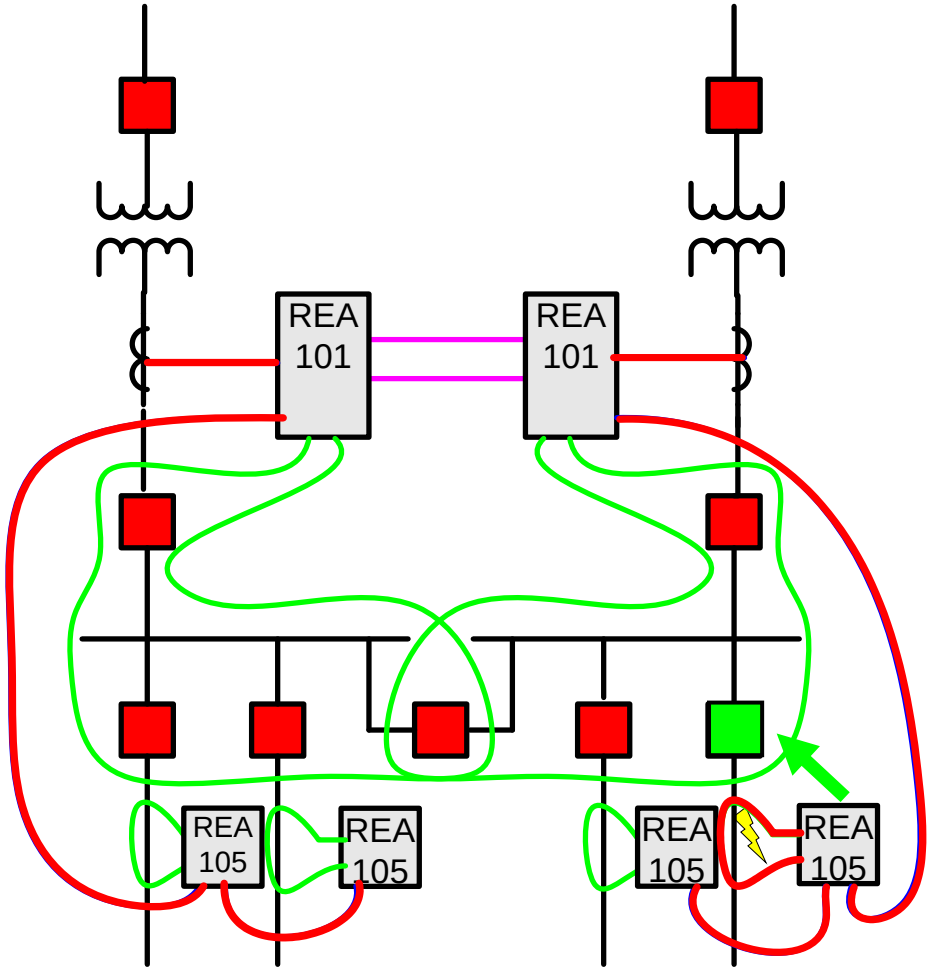

- Arc in a cable compartment
- Relay detects light
- Both relays detect overcurrent
- Both relays send the current information to all connected units
- Only the affected feeder breaker is opened

Effects of an Internal Arc Fault
New active protection using grounding switches

Fast Grounding Switch

- A device as small as a 24 kV insulator offers enhanced protection for your switchgear by minimization such effects
- The arc protection system channels the uncontrolled release of energy by the arc into a solid metal, 3-phase connection to earth potential
- The internal arc will be extinguished within an operation time of **< 4 ms** after detection of the fault

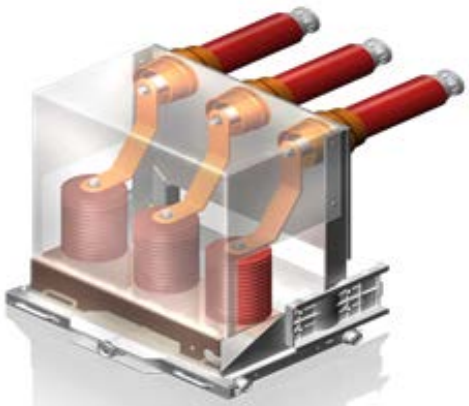

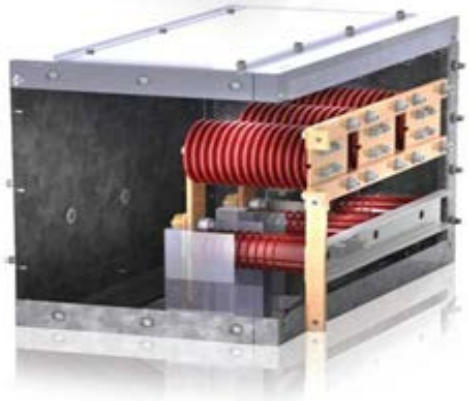

© ABB

Switching Principle

Service position

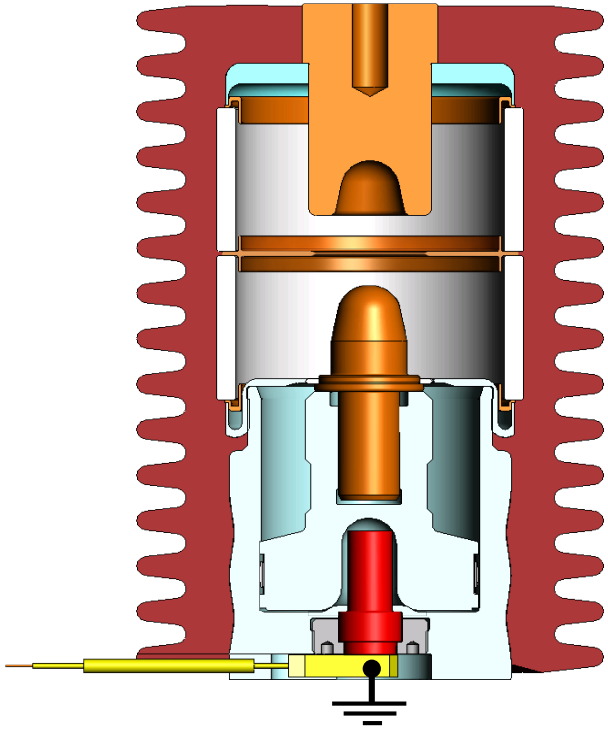

Vacuum-
interrupter

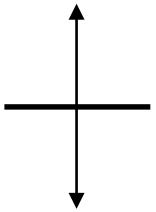

Drive

Moving
direction

Current flow
after tripping

Position after tripping

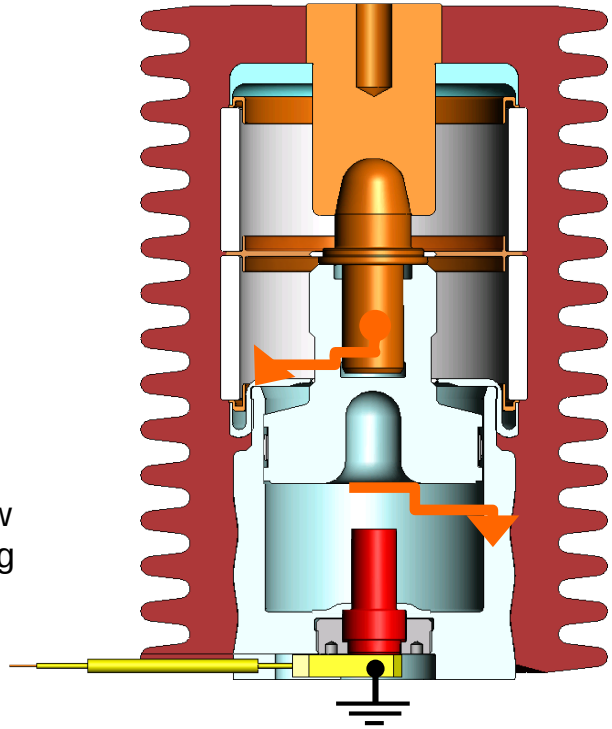

© ABB Group
March 13, 2019 | Slide 53
© ABB
March 13, 2019

A New Way to Approach Arc Fault Mitigation
Test of ABB's grounding system "UFES"

- LV circuit breaker compartment before and after initiation of a 60kA arc
- Arc eliminated by active UFES protection

Test 5 Details

Quantity	Test 9	Test 5	Comments
LV			
I_{bolted}	55.1kA	55.1kA	
I_{arc} (predicted)	22.2kA	22.2kA	Per 1584 SWG and solid ground
$I_{arc\ (avg.)}$	19.0kA*	8.7kA	* - Primary current X turns ratio
I_{peak} (kA)		21.6 kA	Test 9 had no secondary CT's
Arc Duration	458ms	3.89ms	Test 9 duration from analysis of MV current
Incident Energy (cal/cm^2)	27.2	0.4	Predicted at 24"
Incident Energy (cal/cm^2)	49.8	0.5	Measured at 24" No calorimeters on racking test (7)
W_{arc}		27.6 kWs	No LV instrumentation on test 9
P_{arc}		16.1 MW	
MV			
I_{bolted}	36kA	36kA	On MV system
I_{arc} (predicted)	0.86kA	0.86kA	For secondary arc fault
I_{avg}	0.73kA		During arc event I_{arc} less than 4ms in duration
t_{HSGS} (relay & HSGS)		3.7ms	From event initiation to HSGS closed
t_{fuse} (prearcing)		1.1ms	From HSGS closed (0V) until first fuse melts
t_{fuse} (arcing)		2.8ms	From first melt until last fuse clears.
I_{peak} (at fuse melt)		23.4 kA	Potential 104kA peak from source
Longest Undervoltage		2.4ms	Based on time of last fuse to melt.
Longest Overvoltage		1.5ms	On MV system
Peak Voltage		25.0kV	Highest Φ-N
W_{total} (MJ)	6500 kWs	61kWs	Total W measured by test lab

2. Reduce Duration of the Arc (Clearing Time)

- Maintenance switch (LV)
- Zone selective interlocking
- Bus differential
- Fast earthing switches 4 ms
- Light detection relay (REA) < 2.5 ms
- Current Limiters 0.6 ms

Incident Energy Key Equation

$$E = 4.184 C_f E_n \left(\frac{t}{0.2} \right) \left(\frac{610^x}{D^x} \right)$$

- E is the incident energy (cal/cm^2)
- C_f is a calculation factor
  - 1.0 for voltages above 1 kV
  - 1.5 for voltages at or below 1 kV
- E_n is the energy normalized for a specific time and distance (cal/cm^2) dependent on the available fault current & physical equipment
- t is time in (seconds) REDUCE
- x is a distance exponent (lookup from IEEE table)
- D is the distance from the possible arc point (mm) INCREASE

Options to Reduce Clearing Time

- Reconfigure protective relay schemes, settings, and types
- Instantaneous arc detection (long-fiber technology) ≤ 2.5 ms
- Fast grounding switch < 1.6 ms

© ABB
March 13, 2019

Effect of Reduced Arc Clearing Time

Select Equipment Type
- (●) Switchgear
- ( ) Panelboard or MCC (<1000V)

Select Grounding Method
- ( ) Ungrounded or High Resistance Grounded System
- (●) Grounded Systems

Color	Hazard Category	Hazard Range cal/cm^2
	Above 4	Greater than 40
	4	25 to 40
	3	8 to 25
	2	4 to 8
	1	1.2 to 4
	0	Less than 1.2

Voltage (kV)	13.8

Incident Energy Comparisons

Bolted Fault Current (kA)	Arcing Current (kA)	*Arc Flash Relay*	*Incident Energy (cal/cm^2)*										Clearing Time (sec)
		0.086	0.1	0.2	0.3	0.4	0.5	0.6	0.7	0.8	0.9	1.0	
10.0	9.7	1.08	1.25	2.50	3.75	5.00	6.25	7.51	8.76	10.01	11.26	12.51	
20.0	19.2	2.25	2.61	5.23	7.84	10.45	13.06	15.68	18.29	20.90	23.51	26.13	
30.0	28.6	3.46	4.02	8.04	12.06	16.08	20.10	24.12	28.14	32.16	36.18	40.20	
40.0	37.9	4.69	5.46	10.91	16.37	21.83	27.29	32.74	38.20	43.66	49.12	54.57	
50.0	47.2	5.95	6.92	13.84	20.75	27.67	34.59	41.51	48.42	55.34	62.26	69.18	
60.0	56.5	7.22	8.40	16.79	25.19	33.59	41.98	50.38	58.78	67.17	75.57	83.97	
70.0	65.7	8.51	9.89	19.78	29.67	39.56	49.45	59.35	69.24	79.13	89.02	98.91	
80.0	74.9	9.80	11.40	22.80	34.20	45.60	56.99	68.39	79.79	91.19	102.59	113.99	
90.0	84.1	11.11	12.92	25.84	38.76	51.67	64.59	77.51	90.43	103.35	116.27	129.19	
100.0	93.3	12.43	14.45	28.90	43.35	57.80	72.25	86.69	101.14	115.59	130.04	144.49	

© ABB
March 13, 2019

Arc Flash Mitigation – Maintenance Mode Switch

- Maintenance Mode Switch Performance
- Maintenance Mode “OFF”

Summary - Arc Flash Hazard Calculations

Faulted Bus				Fault Current			Trip Device						
			Gap	Bolted Fault (kA)		PD Arc		Trip	Open	FCT	Arc Flash Boundary	Incident Energy	Working Distance
ID	Nom. kV	Equip. Type	(mm)	Bus	PD	Fault (kA)	Source Trip Device ID	(cycle)	(cycle)	(cycle)	(ft)	(cal/cm²)	(inches)
LV-BUS	0.480	Switchgear	32	43.481	36.700	15.368	LV-BKR	73.17	0.00	73.17	24.9	49.1	24

- Maintenance Mode “ON”

Summary - Arc Flash Hazard Calculations

Faulted Bus				Fault Current			Trip Device						
			Gap	Bolted Fault (kA)		PD Arc		Trip	Open	FCT	Arc Flash Boundary	Incident Energy	Working Distance
ID	Nom. kV	Equip. Type	(mm)	Bus	PD	Fault (kA)	Source Trip Device ID	(cycle)	(cycle)	(cycle)	(ft)	(cal/cm²)	(inches)
LV-BUS	0.480	Switchgear	32	43.481	4.235	2.086	CB3	0.96	5.00	5.96	5.1	4.8	24

Arc Flash Mitigation – Arc Flash Detection

Arc Flash Detection Performance

- Arc Flash Calculation Results with AFD, Sensing Time = 0.25 cycles, 13.8kV Switchgear, Resistance-Grounded System, Gap = 153mm, Working Distance = 36”

Bus Bolted Fault, KA rms, sym	Arc Fault, KA rms, sym	Breaker Interrupting Time (Cycles)	Arc Flash Time (miliseconds)	Arc Flash Boundary, feet	Incident Energy, cal/cm^2
10	9.71	3	55	1.75	0.61
		5	88	2.83	1.4
20	19.81	3	55	3.75	1.3
		5	88	6.08	3
30	28.58	3	55	5.83	2
		5	88	9.42	4.6
40	37.92	3	55	7.92	3.9
		5	88	12.92	6.2
50	47.22	3	55	10.16	4.9
		5	88	16.5	7.9

3. Increase Work Distance

- Determine Minimum Approach Distance
- Remote racking device
- Remote control panels

© ABB

Remote Solutions

Other means of protection when arc-res switchgear is not available is to remotely operate the breakers via a remote relay cabinet or “SCADA” AND remotely “rack” the breakers with a device similar to the one shown below.

© ABB Group

© ABB

4. Minimize Personnel Exposure / Presence

75% of arc flash incidents happen in the presence of an operator

- Arc resistant switchgear deflects arc flash energy and explosion products
- Magnetically-actuated breakers: one moving part, less maintenance
- Warning labels required by code
- Proper PPE within minimum approach distances; Need risk assessment study and compliance with new law

© ABB
March 13, 2019 Slide 64

Metal-clad Switchgear – Arc Venting
Characteristics of arc resistant switchgear designs

- Robust construction to direct gases to exhaust chambers
- Vent flaps designed to open under pressure and safely expel gases
- Special ventilation
  - Under normal conditions, open to allow air to flow
  - Under arc fault conditions, slams shut to prevent exit of gases
- Double wall construction with 3/16” air gap is very effective in resisting burn through
- Closed door racking and operation of circuit breakers, PT’s, CPT fuses

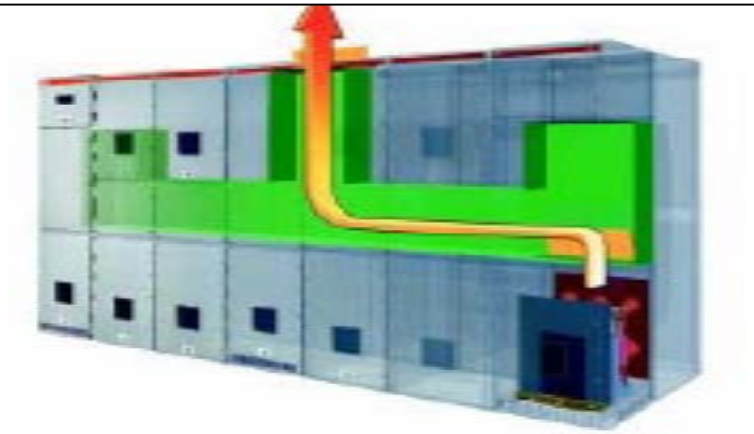

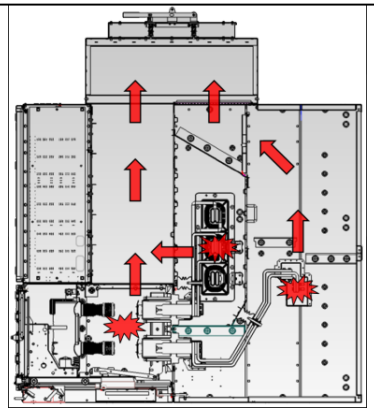

Arc-resistant Switchgear Design
Internal collection chamber

Plenum Design

- Sealed duct across top of switchgear, covering all vent flaps
- Sized and shaped to minimize turbulence and back-pressure
- Allows room for cable trays and conduit entry
- Channels gases safely out of building, through wall penetration and vent

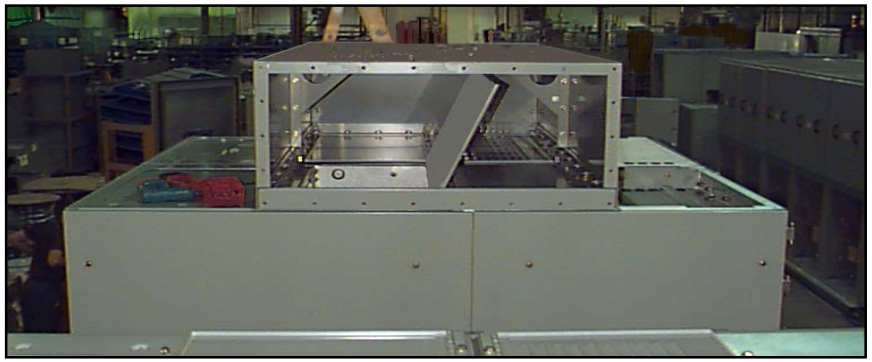

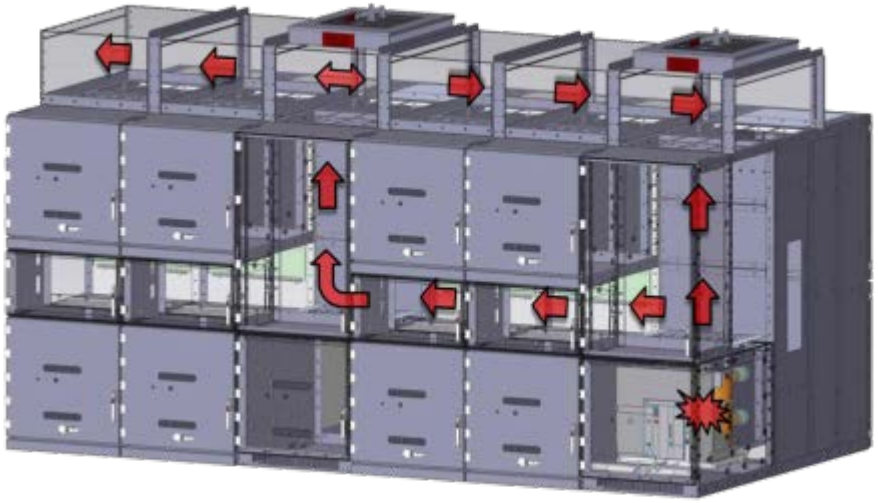

© ABB Group

© ABB

Increase the Working Distance and Post Labels

Increasing the working distance is more straightforward (than reducing fault current)

- De-energize equipment
- Use technology to work further from energized equipment
- Install warning labels (paint floor)
- Ensure appropriate PPE for the hazard level

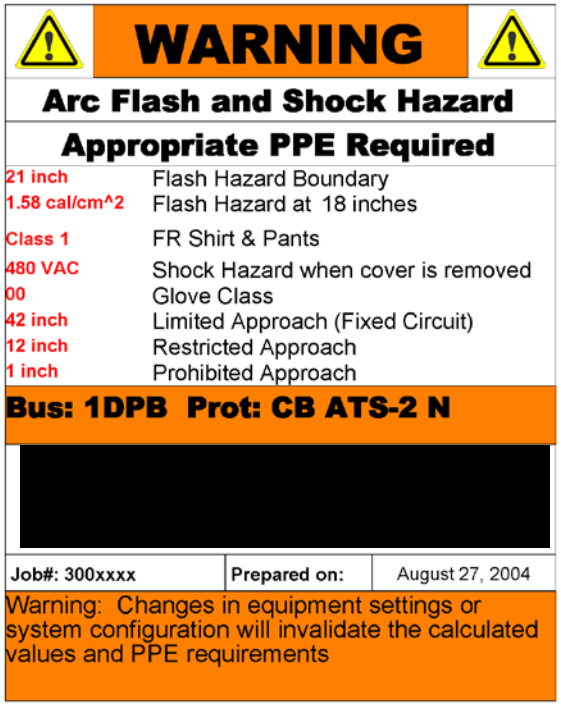

© ABB
March 13, 2019 Slide 68

Magnetically-actuated Breaker
Mechanism design

1. Upper contact terminal
2. Vacuum interrupter
3. Epoxy resin enclosure
4. Lower contact terminal
5. Flexible connector
6. Contact force spring
7. Insulated coupling rod
8. Lever shaft
9. Stroke adjuster
10. Sensors for switch position detection
11. Open/Close coil
12. Permanent magnets
13. Magnet armature
14. Open/Close coil
15. Emergency manual breaking mechanism
16. Mechanism enclosure with magnetic actuator

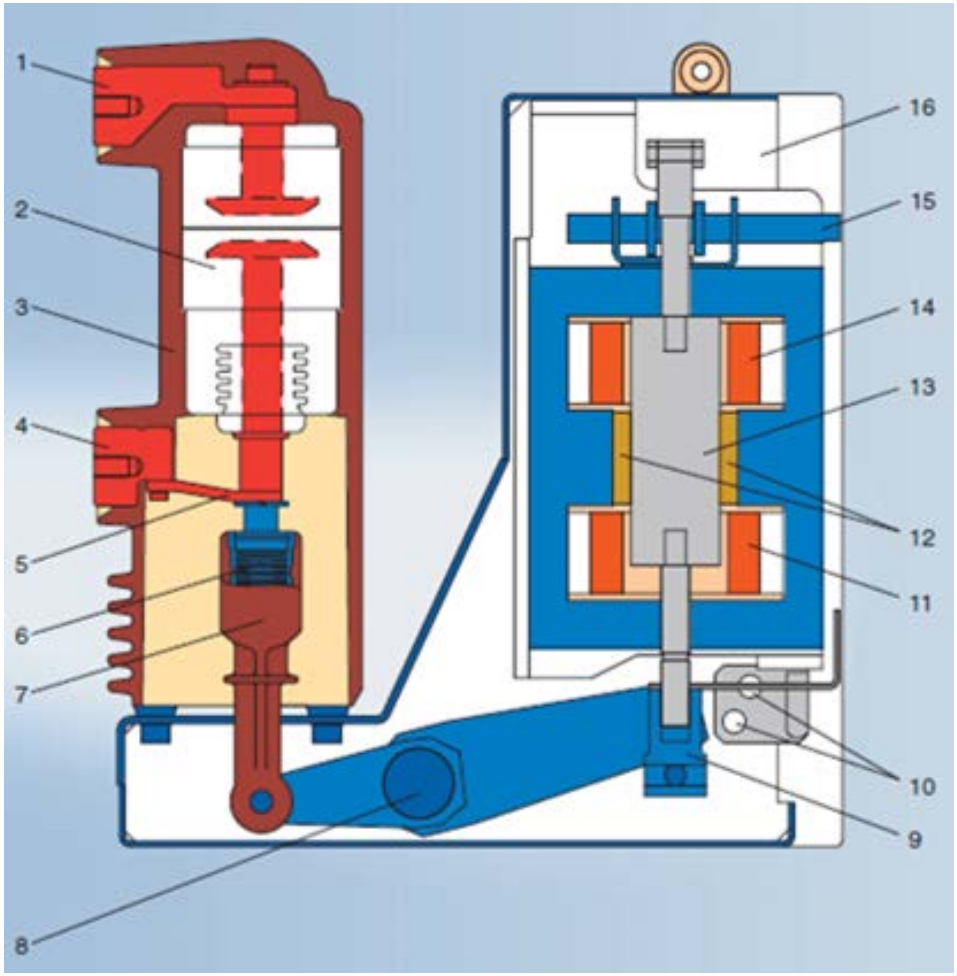

© ABB Group

© ABB

Magnetically-actuated Breaker
Reliability

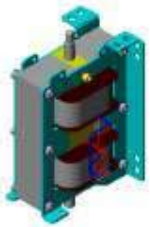

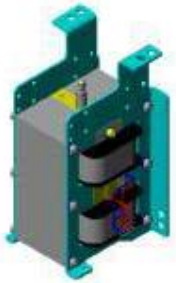

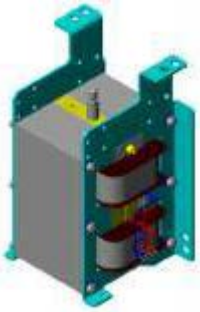

- No maintenance required on the magnetic actuator operating mechanism
  - Consists of only 1 moving part, no springs utilized
  - Replaces spring mechanism, motor, open coil, close coil
  - Capable of a high number of operations
- Coil protection eliminates frequent failure of traditional coils
  - Current is only held on the coils for 45 ms – eliminates burning of coils as in traditional spring charge mechanism
  - One coil used for closing and one coil for opening

© ABB

Summary
Rules & remedies

1. Several regulators and a new law
2. Reduce fault currents for a new design
3. Reduce fault currents for an existing design
4. Minimize arc duration
5. Increase work distance / remote control
6. Minimize personnel exposure and maintenance

How Can ABB Help?

1. Assistance and training to understand the new law
2. Perform risk assessment studies
3. Provide you most advanced technologies for arc flash mitigation to comply with the new law

Contact Information

If you have further questions, please contact me at:

PRESENTER	Samy Faried, PE
COMPANY	ABB
CONTACT PHONE	(239) 560-1094
CONTACT E-MAIL	samy.faried@us.abb.com

Power and productivity
for a better world™

ABB