Hands On Relay School 2017

RFL Electronics Inc.
www.rflelect.com

PLC
Teleprotection

Application of TPS

PLC

IEEE Std 643-2004

The PLC uses the Power lines to transmit and receive signals from station to station. These signal handed off from protective relays (21, 50BF) and can be either from hard-wire connections (inputs to outputs) or Ethernet LAN per the IEC 61850 standard. It is well suited for standard and non-standard pilot protection schemes such as:

- Permissive Transfer Trip
- Direct Transfer Trip
- Blocking and Unblocking

Where does PLC fit???

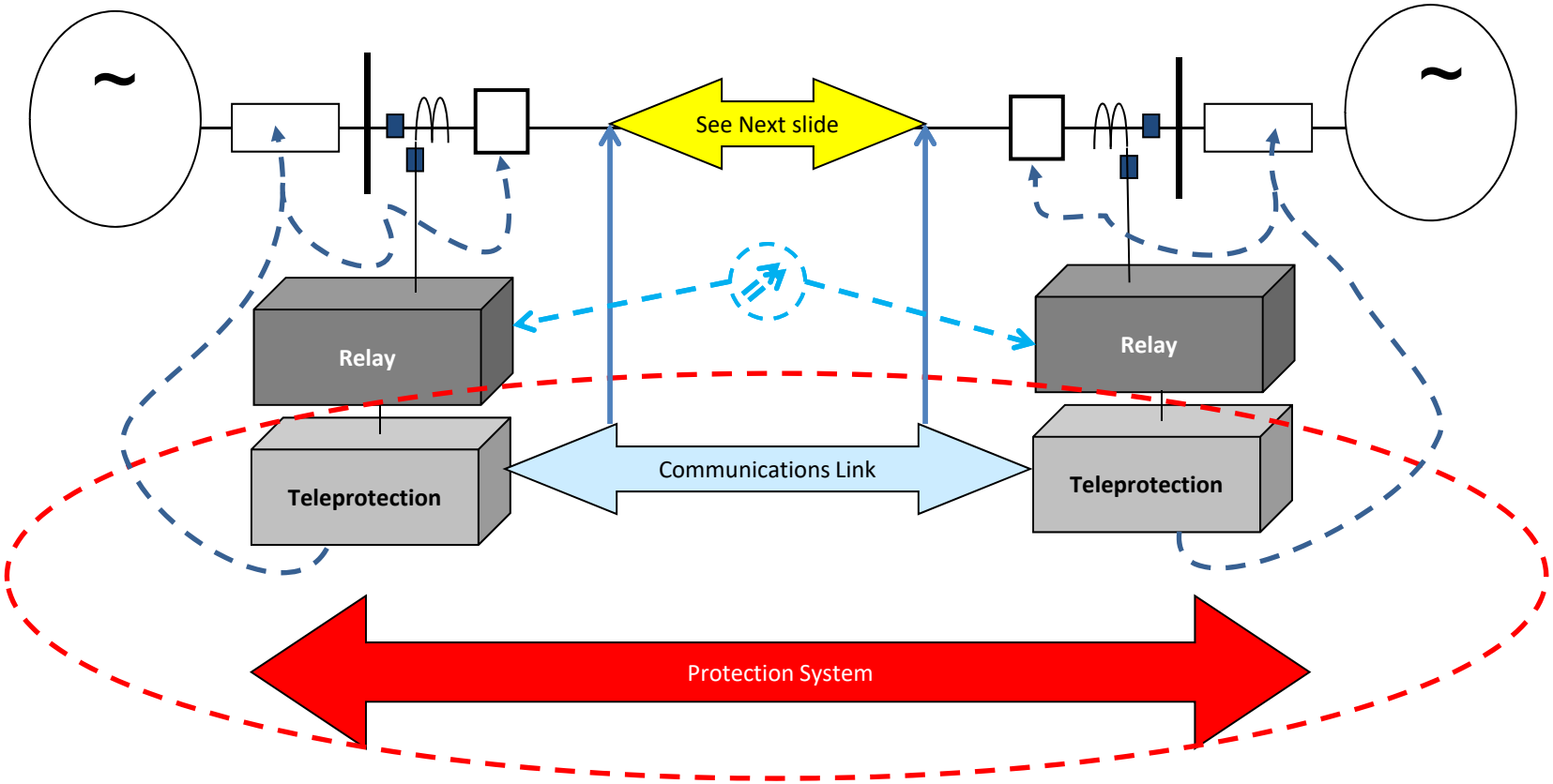

PLC Channel

PLC Channel consist of three distinct parts:

1. The Terminal Assemblies
   - Transmitter, Receivers, Protective Relays
2. The Coupling Equipment
   - Line Tuner, Coupling Capacitor, Line Traps
3. The Transmission Line
   - Provides a Path

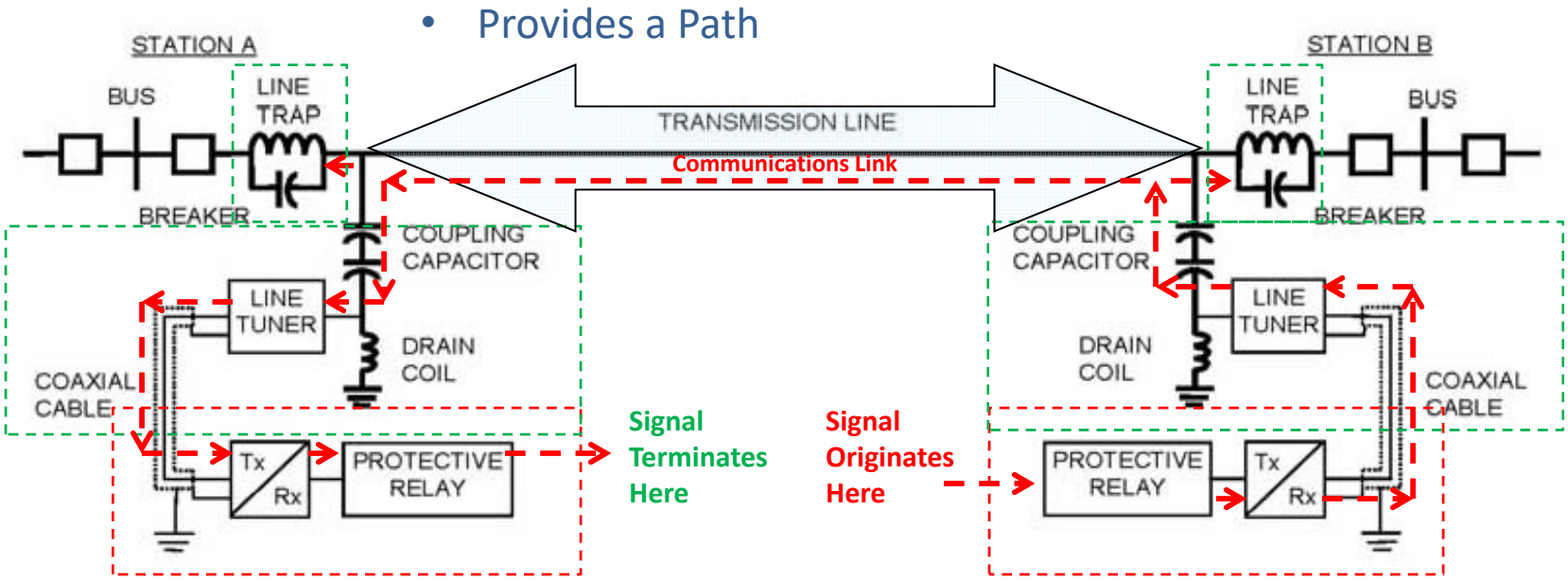

Figure 1—Diagram of a PLC channel

PLC System Puzzle

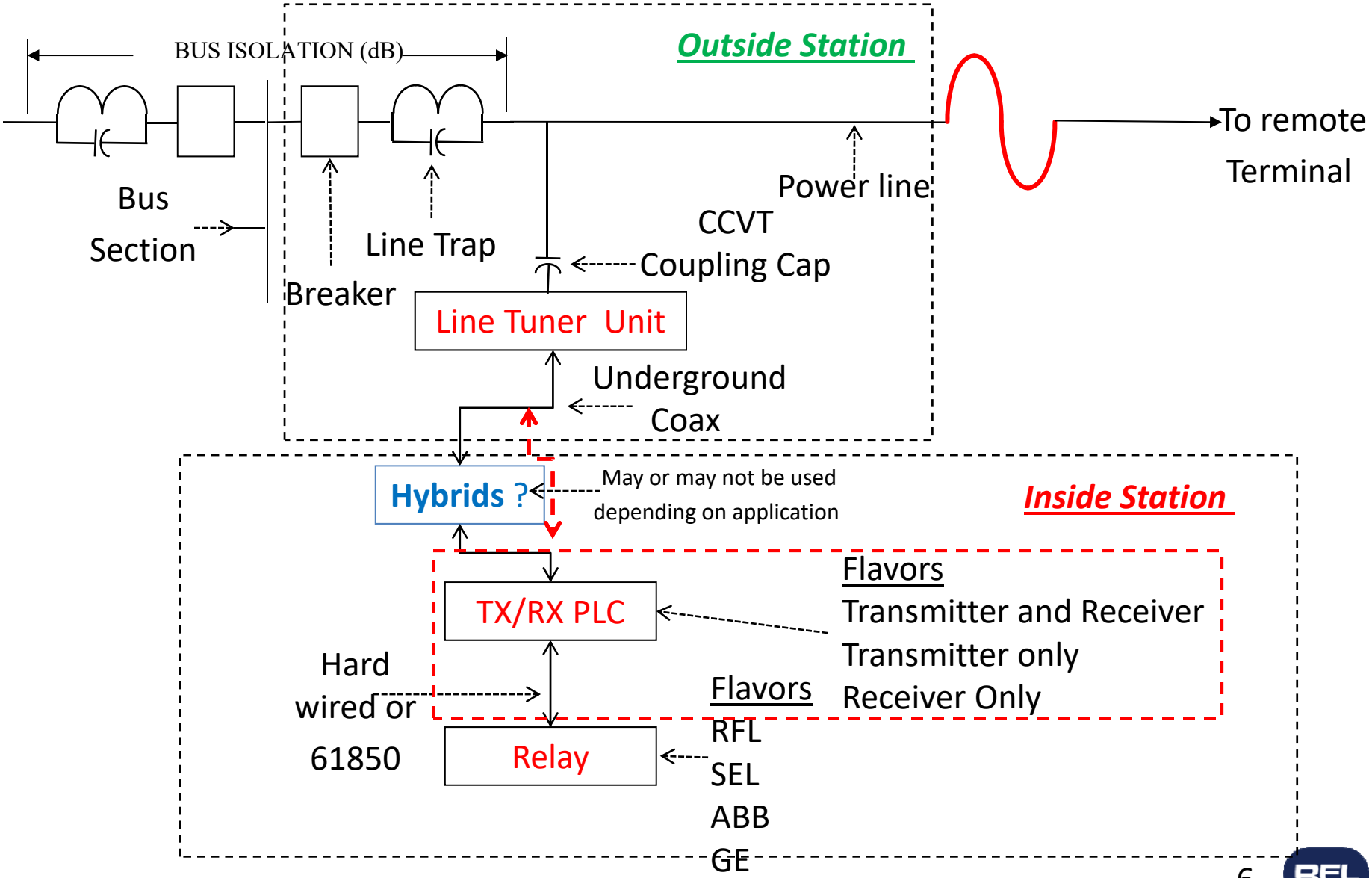

PLC

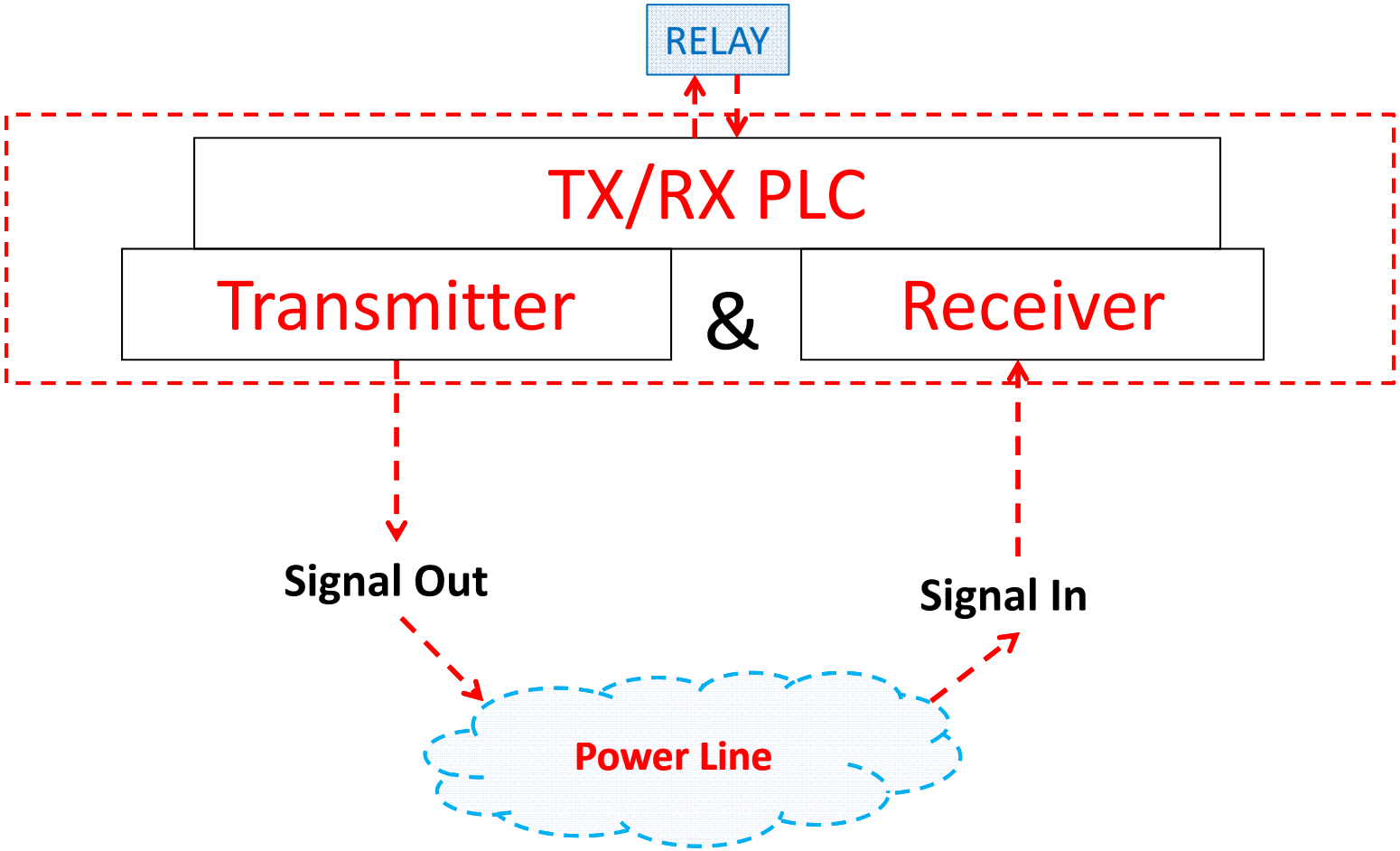

Focus on the equipment and not the Power Line

Think of the Power Line just like the internet, a means of getting information from one place to another and back.

TERMS & DEFINITIONS

hubbellpowersystems.com

TWO BASIC TYPES OF PLC CARRIER EQUIPMENT

* <u>SINGLE FUNCTION</u>

One specific action performed:

EX: Protective Relaying

OR Voice

OR Telemetering

* <u>MULTI FUNCTION</u>

Capable of handling several functions simultaneously:

EX: Protective Relaying

AND Voice, AND Telemetering, AND Tones, AND Data

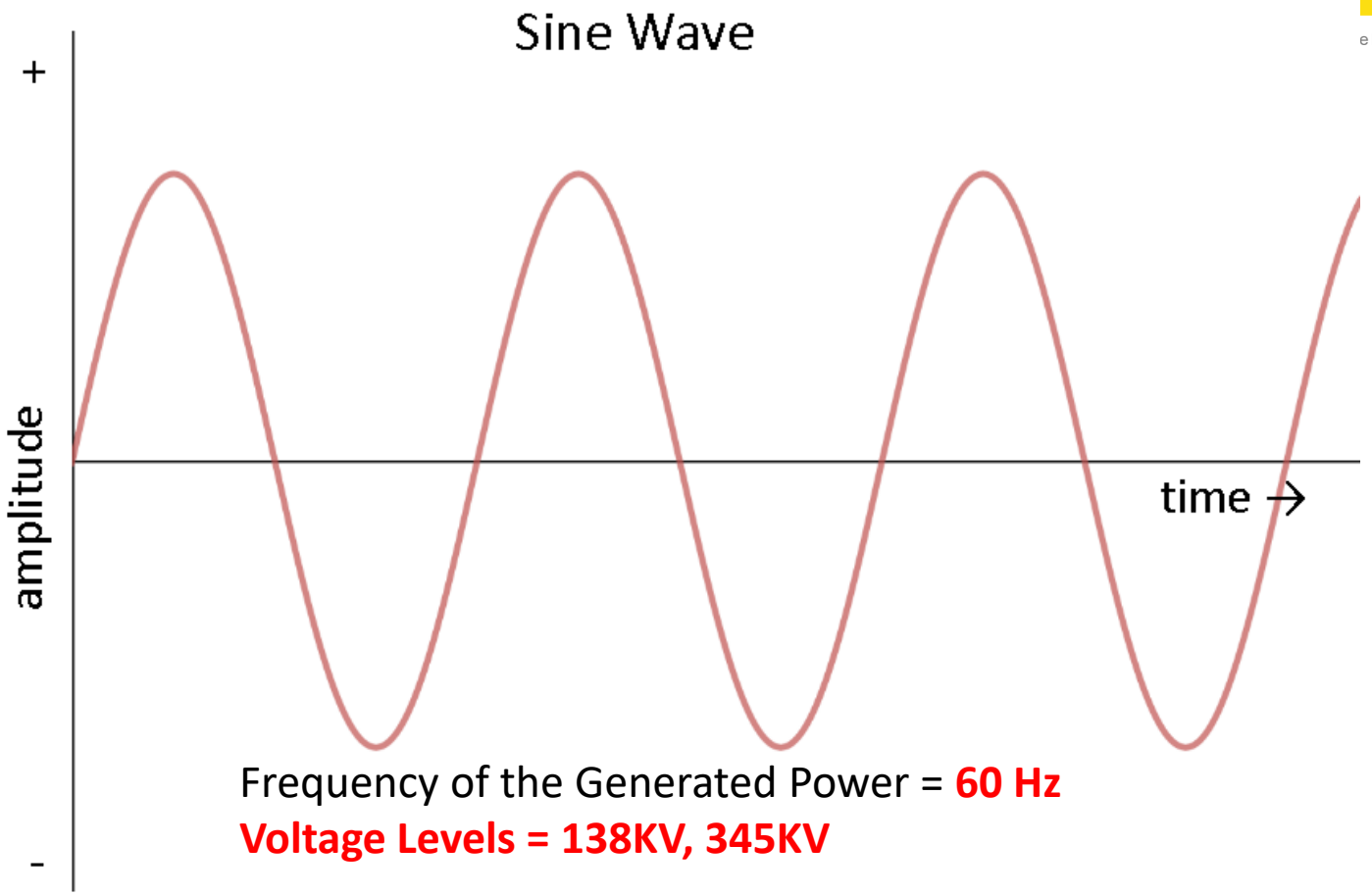

Frequency of the Generated Power = **60 Hz**

Voltage Levels = 138KV, 345KV

PLC Freq. range 30 to 300 KHz
Millivolts to Volts,
typically expressed in Watts i.e.
1Watt/10Watts/50Watts/100Watts

Using Frequencies to Communicate On/Off vs. FSK

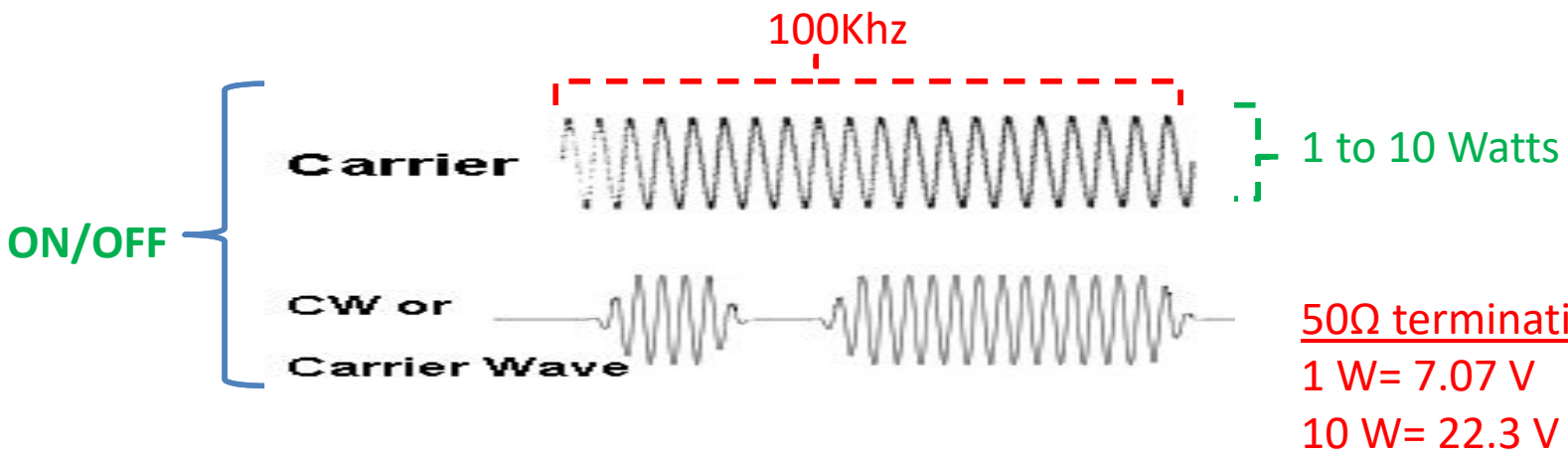

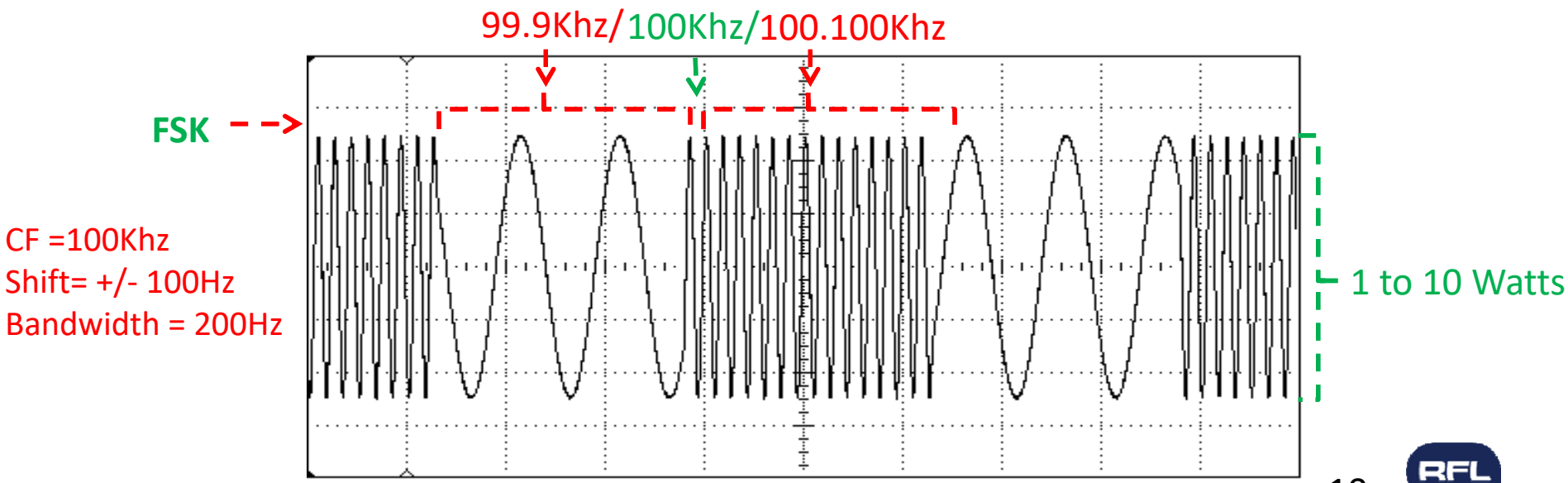

Power Line Carrier Technology

PLC Signal Types

- "AM" Keyed Carrier (On-Off)
  - Blocking/Unblocking
- "AM" Single Sideband Modulation
  - Data/Voice
- "FSK" Frequency Shift Keying
  - DTT/POTT
  - Blocking/Unblocking

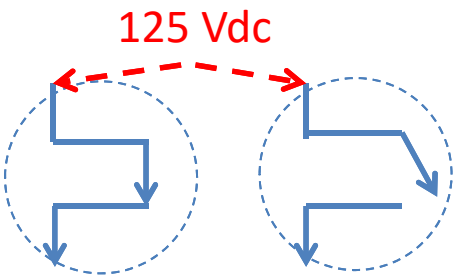

To Relay Contacts

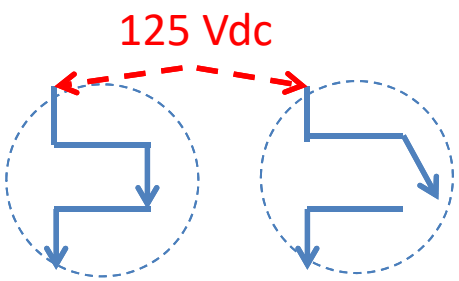

To Relay inputs or
Lock-Out/Breaker coils

TERMS AND DEFINITIONS

PLC KEYED CARRIER

''AM'' SPECIAL CASE

- CARRIER NORMALL OFF
- TRANSMIT INTELLIGENCE BY TURNING CARRIER ON

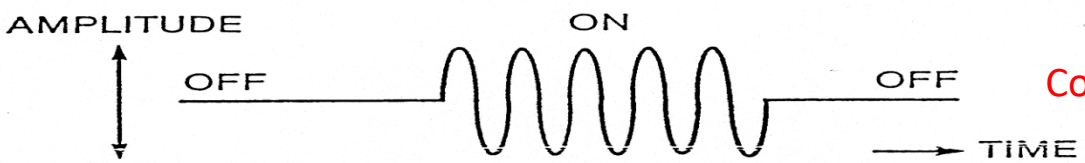

100Khz

Turning it On or Off is :

Commonly called **"Keying"**

- FUNCTIONAL USE FOR
  BLOCKING TYPE RELAYING SYSTEM
  ON/OFF SIGNALLING AND CHECKBACK
- EQUIPMENT EXAMPLES
  RFL 6785P and 9785 **Guard, Ametek UPLC**
- SPECTRUM USE: DEPENDS ON RECEIVER BANDWIDTH (SPEED)

TERMS AND DEFINITIONS

Energizing an input to shift the Frequency is :

Commonly called **"Keying"**

FREQUENCY SHIFT KEYING

- CARRIER ALWAYS ON
- CARRIER SHIFTS UP (HIGHER) AND DOWN (LOWER) } TO TRANSMIT INFORMATION

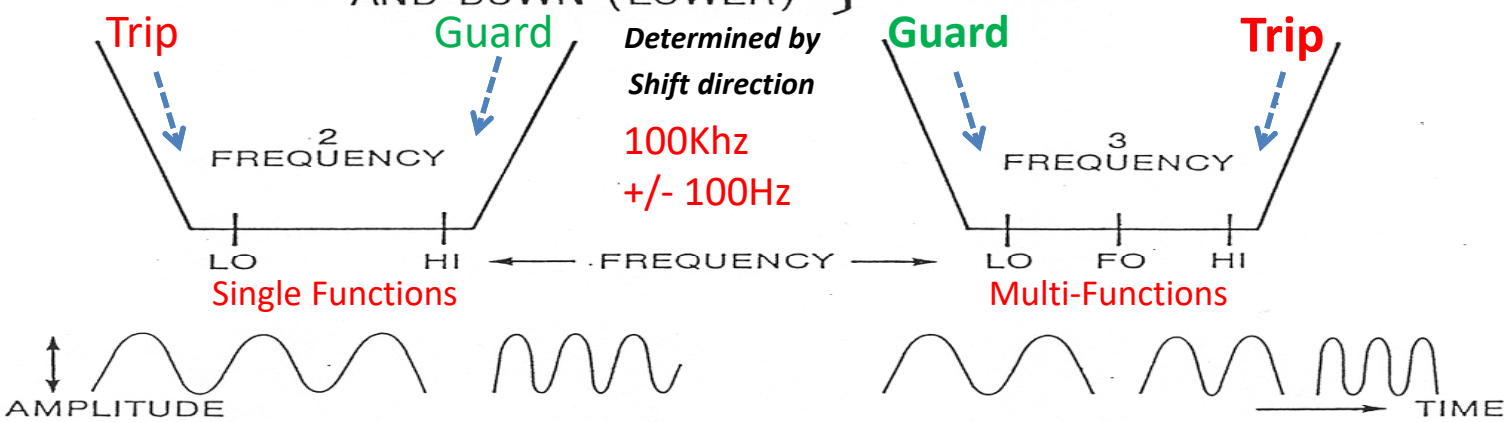

- FUNCTIONAL USE

2 FREQ	TRANSFER TRIP
	TELEMETERING & SCADA
3 FREQ	TRANSMIT KWHR READINGS
	LOAD CONTROL — RAISE-LOWER-HOLD
	DUAL PHASE COMPARISON

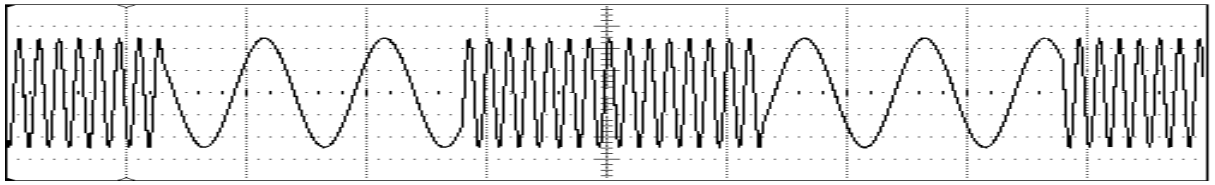

Channel Bandwidths and Spacing
Vs.
Channel Delay

Table 2-1. Minimum permissible channel spacings and delays times, RFL 9785 Programmable ON/OFF Powerline Carrier System

Nominal Bandwidth	Delay	Channel Spacing w/voice	Channel Spacing w/o Voice
500 Hz	5 ms	4 KHz	1 KHz
1000 Hz	3 ms	4 kHz	2 kHz
1500 Hz	1.5 ms	4 kHz	3 kHz

ON/OFF

FSK

Frequency Shift ±Hz	Nominal Bandwidth	Delay Time *	Unidirectional Channel Spacing	Bi-Directional Channel Spacing
100 Hz	200 Hz	12 ms	500 Hz	1000 Hz
250 Hz	500 Hz	7 ms	1250 Hz	2500 Hz
500 Hz	1000 Hz	5 ms	2500 Hz	5000 Hz

Table 3. Minimum permissible channel spacings and delay times.

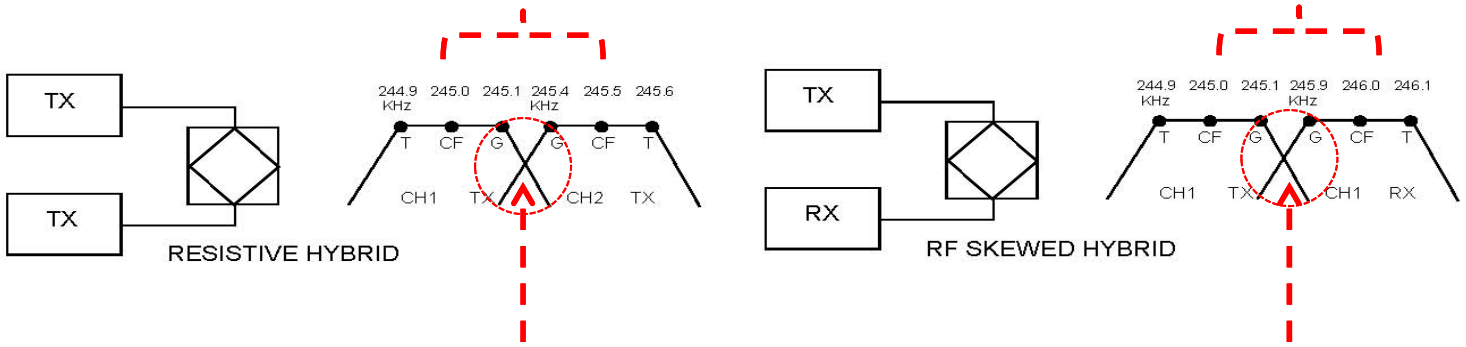

a. Unidirectional system
(500-Hz minimum spacing, 100 Hz shift)

b. Bidirectional system
(1000-Hz minimum spacing, 100 Hz shift)

PLC Terms

hubbellpowersystems.com

GUARD Freq	The Frequency sent from terminal to terminal all the time during the quiescent state of the power system.
TRIP Freq	The Frequency sent from terminal to terminal during the faulted state of the power system
Keying	A term use when wetting voltage is applied to the input designated as the 'Trip Key' this will cause the frequency to shift from Guard tone to Trip tone.
FSVM	The frequency selective level meter (SLM) is a meter designed to measure the signal level of individual frequencies from 5 Hz to 5 MHz . Typical levels are measured or recorded in dBms
Nominal Level	A signal level which sets the receive level so that it represents 0 dBm and defines the parameters of the dynamic range.
2-Wire	Single coax to LTU
4-wire	Multiple path for TX and RX via Hybrid

PLC Signal Levels

hubbellpowersystems.com

Voltage/Watts

- Typical On/Off = 10W/40dBm/22.3V @50Ω
  - Reserve keying = 1W/30dBm/7.07V @50Ω
    - Check-Back = 1W/10W

- Typical FSK =
  - 1W/30dBm/7.07V @50Ω **Guard**
  - 10W/40dBm/22.3V @50Ω **Trip**

On/Off

Signals Levels

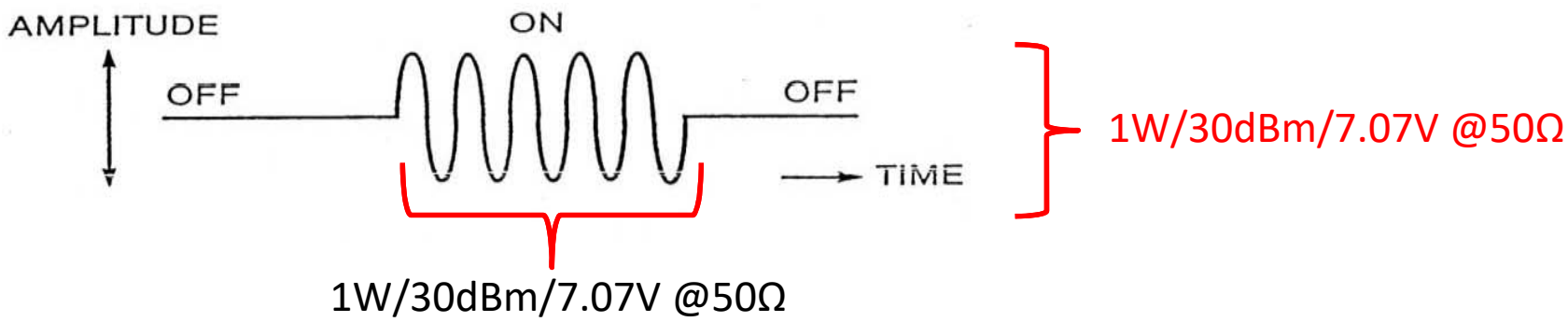

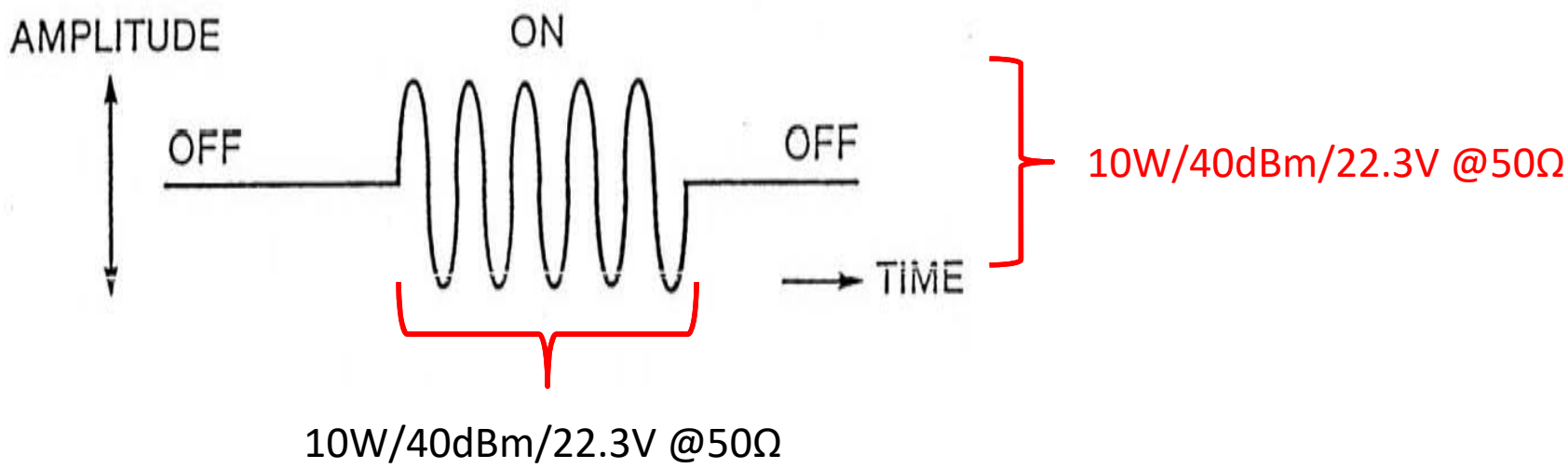

Guard and Trip Frequencies

Frequencies 30 To 300KHz

Guard & Trip

Shift Down Channel

Voltage Amplitude Or **Level** Typically measured In dBm

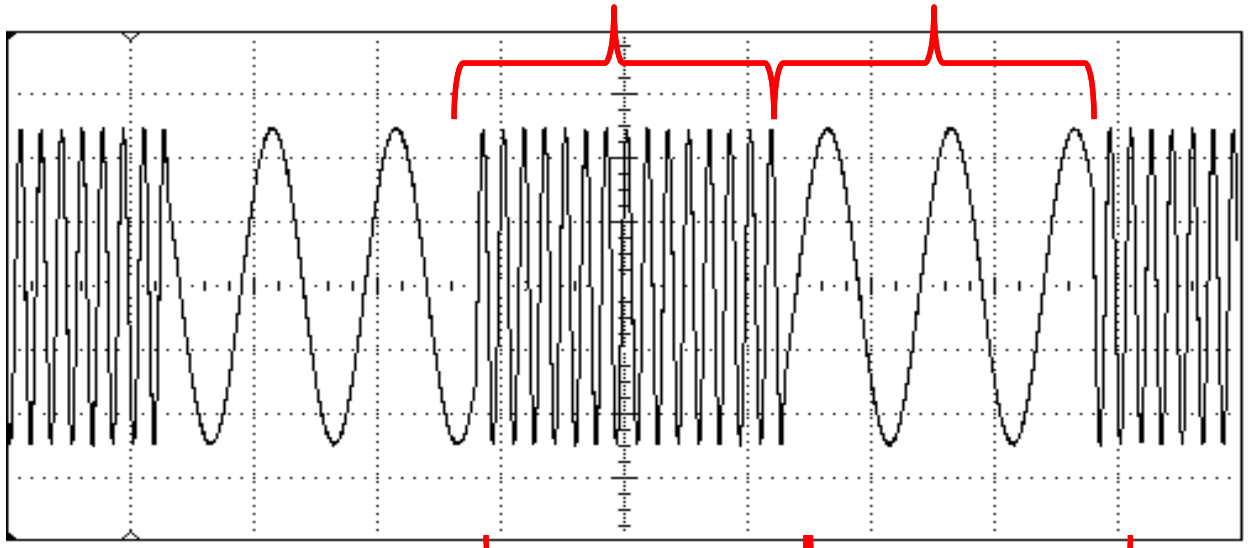

100Khz +/- 100Hz

Un-Keyed to Keyed Vice-versa

Guard and Trip levels

hubbellpowersystems.com

Channel is defined as:

F0=100Khz
BW=200Hz
SH = +/- 100Hz
Power =1W/10W

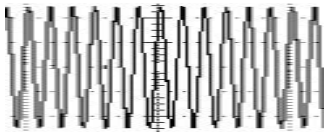

Un-Keyed Guard 100.100Khz

1W/30dBm/7.07V @50Ω

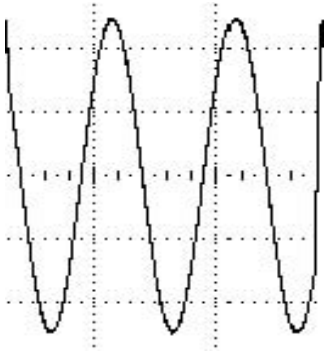

Keyed Trip 99.9Khz

10W/40dBm/22.3V @50Ω

RX DET
Operating Range & Dynamic Range
Nominal Level

Maximum receiver sensitivity 25 Vrms

Rx AGC Setpoint setting – Sets headroom in analog portion of recevier. Set to 30 dB. → + 30dB

Nominal Trip Level (Boost) → +10 dB

Nominal Guard Level → 0 dB

Signal Dropout Alarm (FSK only) Sets alarm point → -10 dB

Min Rx Level Setting On/Off = -15dB / FSK = -11dB → -11 dB

For On/Off, determines the minimum level of signal detection
For FSK, determines max inst. drop from Nominal to Trip

FSK Trip Rx Threshold (FSK Only) Absolute minimum level required to trip. Recommended setting 25 dB (Range 0 dB to 100 dB) → - 25dB

Minimum receiver sensitivity 5 mVrms

Dynamic Range

Receiver Operating Range

Signal to Noise Alarm (FSK Only) Issues an alarm, and disables tripping for noise levels exceeding the ratio setting. Recommend setting 10dB. (0dB to 100dB range).

Power Line Carrier Technology

Terms and Definitions

dB

*Logarithmic ratio of powers

*Express 'gain' or 'loss' without reference to absolute quantities.

dBm

. . .A unit of POWER

Have been used to mean the same thing

"Field Slang"

ORIGIN: Originally used as a standard for telephone circuits, 1 mw is the reference standard

DEFINED AS:

0 dBm = .001 WATT = 1mW

dBm . . .A unit of POWER

ORIGIN: Originally used as a standard for telephone circuits,

1 mw is the reference standard

DEFINED AS: $dBm = 10 \text{ Log}_{10} \frac{\text{Power}}{1 \text{ mw}}$

0 dBm = .001 WATT = 1mW

$\frac{10 \text{ Watts}}{1 \text{ mw}}$ = 10,000 Log of 10,000 = 4 X 10 = 40 dBm

1 Watt = 30 dBm

10 Watts = 40 dBm

Test Equipment
FSVM

Frequency Selective Volt Meter

- Signal Crafters Model 110
- PowerCom Model PCA 4125

PCA 4125

hubbellpowersystems.com

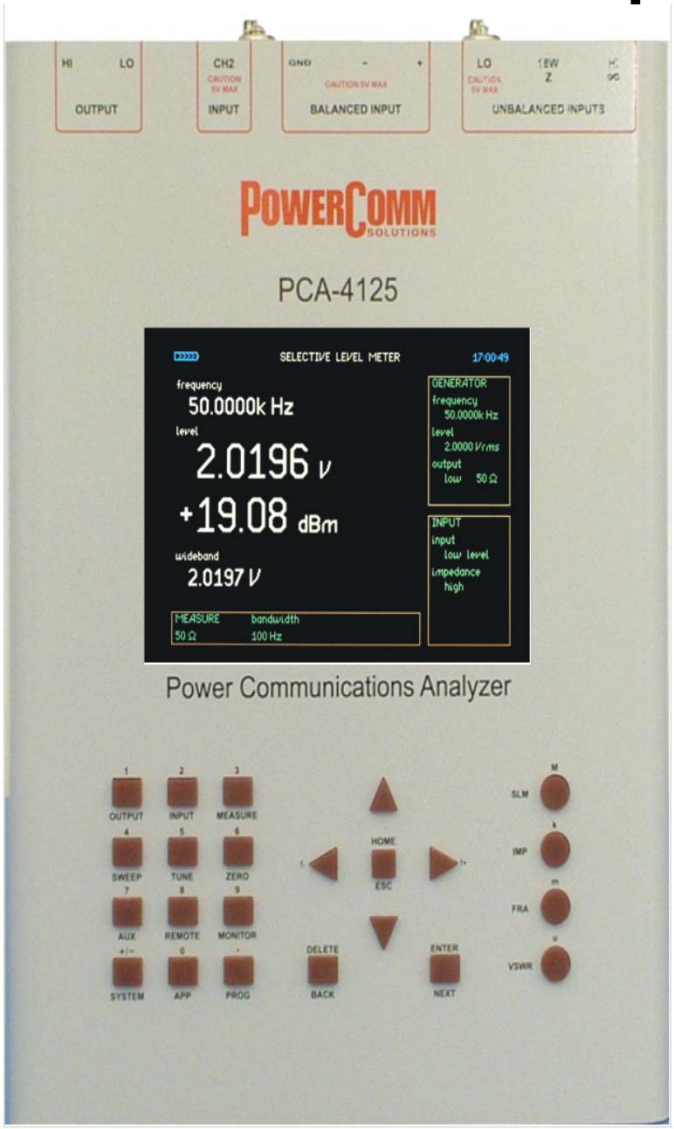

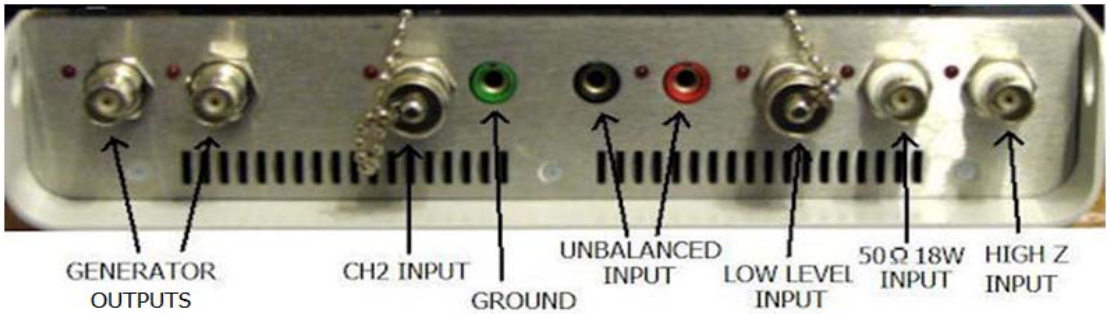

1.1 Instrument Functions

The following is a list of the different instrument functions that the PCA-4125 offers:

- Signal Generator
- Frequency Selective Voltmeter (RMS Voltmeter)
- Impedance Analyzer
- VSWR Meter
- Frequency Response Analyzer
- Oscilloscope
- LCR Meter-Inductance, Capacitance, Resistance Measurements
- Bit Error Rate (BER)

1.4 Power Line Carrier Applications

- Power Line Carrier Alignment & Maintenance
- Line Trap Testing
- Line Tuner Testing
- PLC Transmitter & Receiver Test & Set-up
- Audio Tone Protection Relay Channel Test & Setting

Additional field test equipment

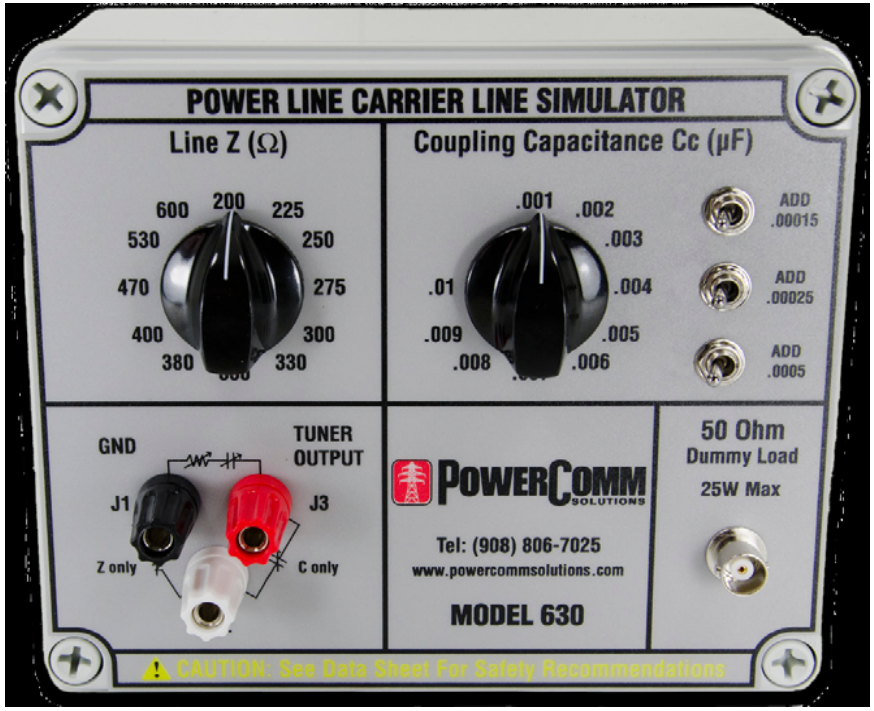

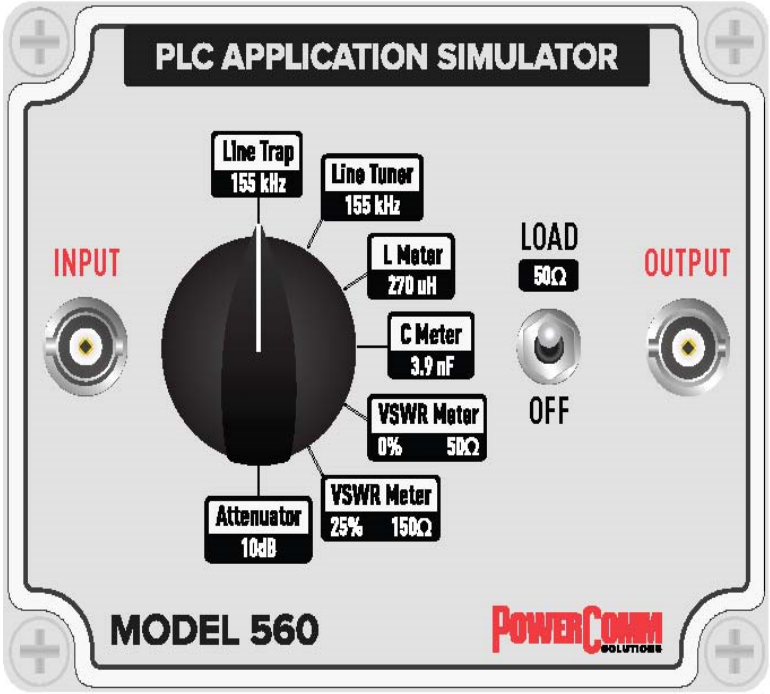

The Model 630 line simulation test box is used to simulate coupling a Power Line Carrier (PLC) to a transmission line. This simulation allows the technician to preset new installations or test the line tuner to determine if it is working correctly. The line simulation test box may also be used to troubleshoot line tuner problems.

The Model 560 was designed to aid the technician in this very challenge by providing a simple hardware interface for validating test instrumentation settings and connections.

Signal Crafter 110

hubbellpowersystems.com

3.4 Front Panel Description:

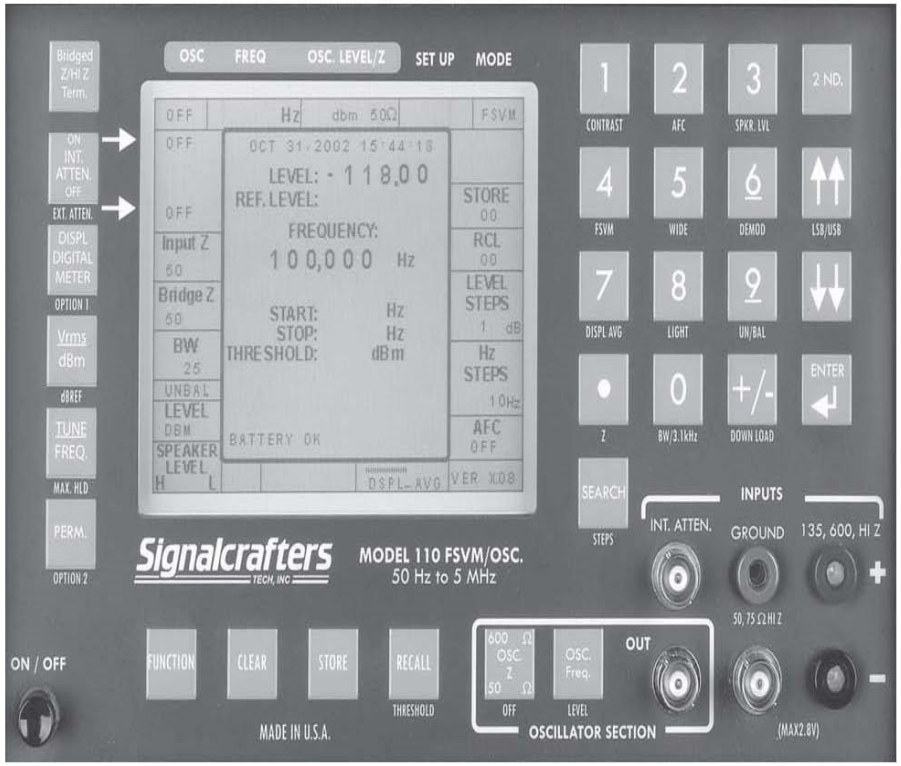

The Model 110 (M110) is a multi-function instrument for measuring voltage levels at frequencies in the range of 50 Hz to 5 MHz (FSVM) and incorporates a signal generator operational over the same frequencies.

RECAP

hubbellpowersystems.com

- PLC can be used as a Communication Path for Relay with no on board communications Channel/PLC has Intelligents
- Typically PLC equipment will function in Single function mode, but can be multiple function
- The are two modes normally used are:
  - 1.) FSK mode
  - 2.) On/Off
- The Frequencies range from 30 to 300 KHz
- The voltage levels Range from 1 Watt (30 dBm) to 10 Watts (40 dBm) but can be up to 50 (47dBm) or 100 Watts (50dBm)
- The Nominal Signal level is a reference level which indicates the actual receive level and sets the Dynamic range.
- A dB is a ratio of one signal level to another
- A dBm is a unit of measurement referenced to 1 mw or 0 dBm
- The Test equipment used to measure the signal level is a FSVM

PLC Equipment
RFL

3U GARD Pro PLC

6U GARD Pro PLC

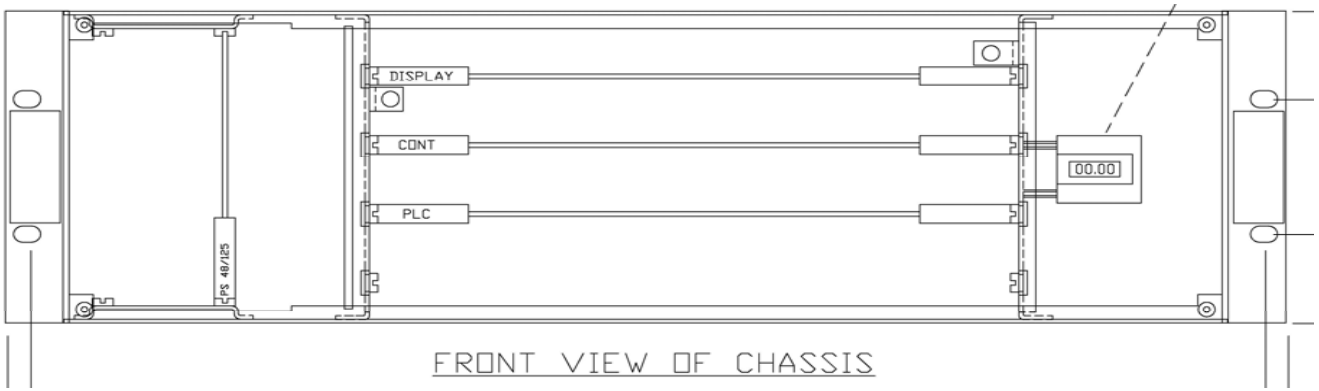

3U GARD Pro PLC

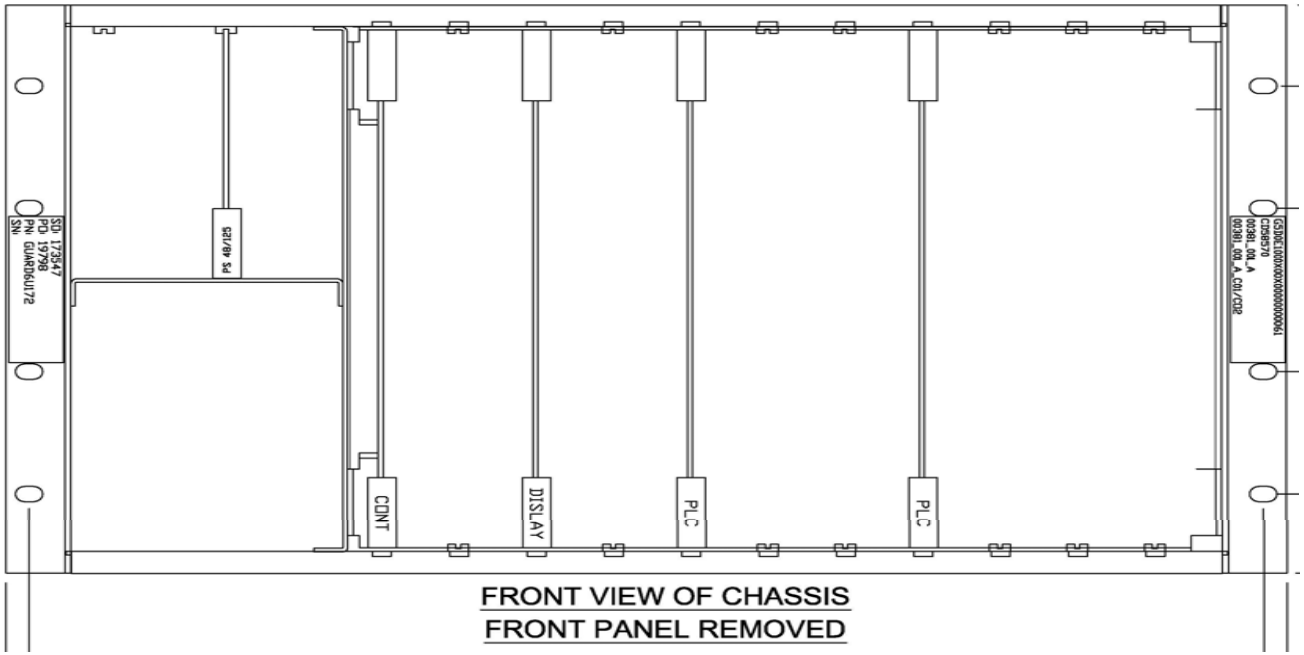

6U GARD Pro PLC

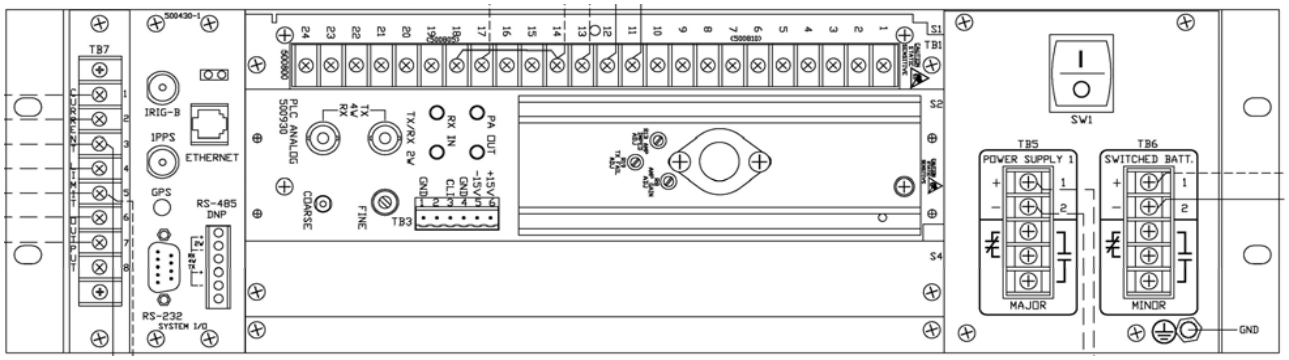

3U GARD Pro PLC

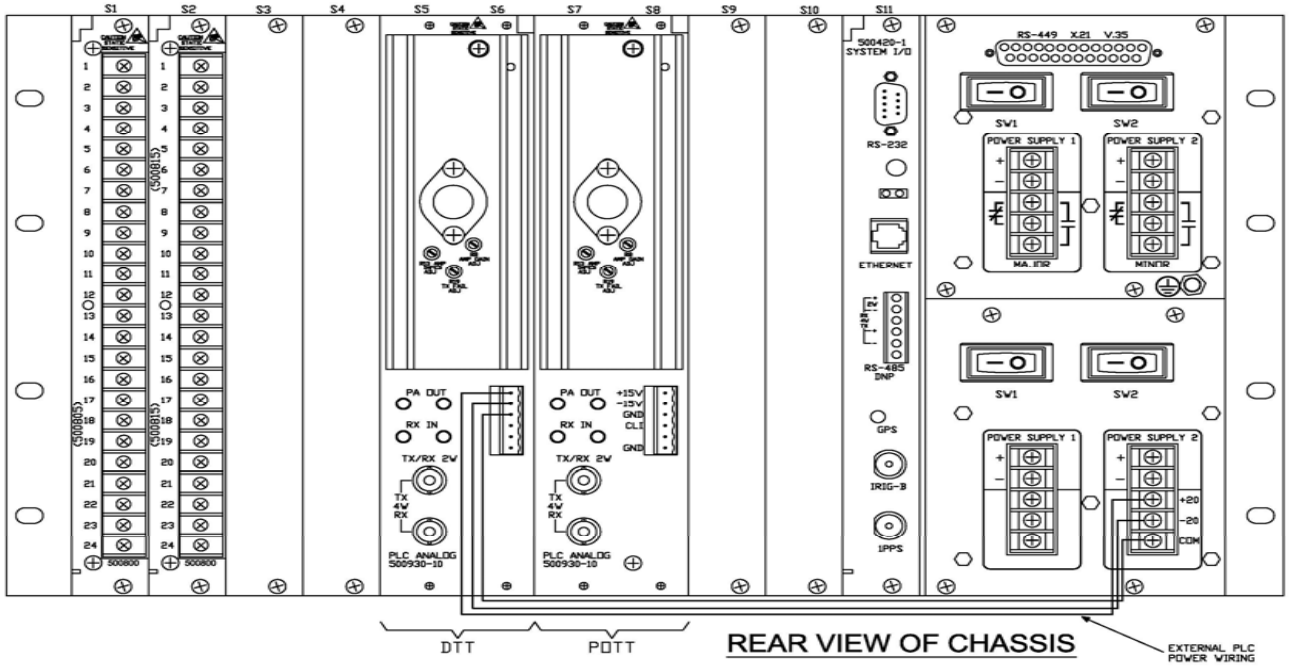

6U GARD Pro PLC

RFL 9780 FSK

RFL 9785 ON/OFF

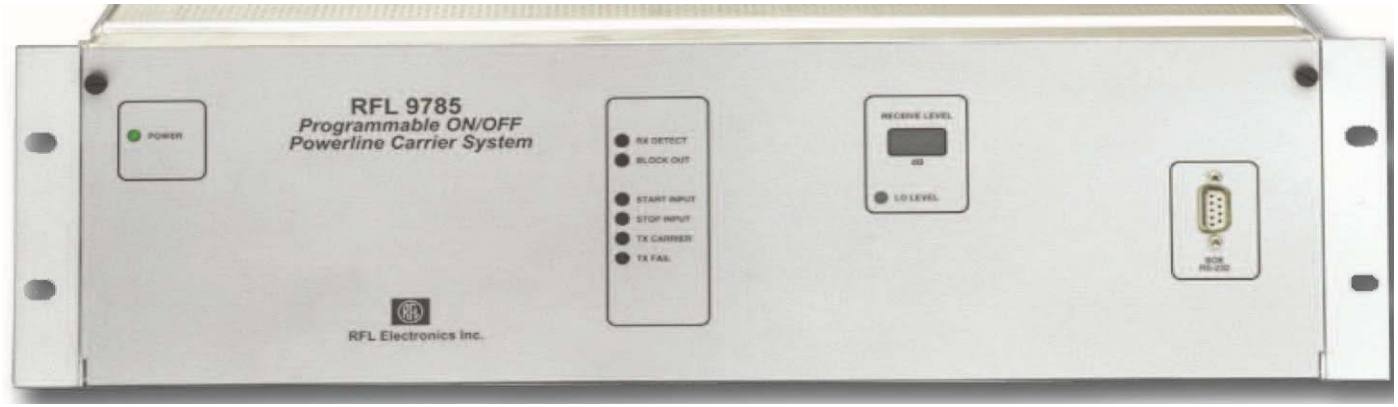

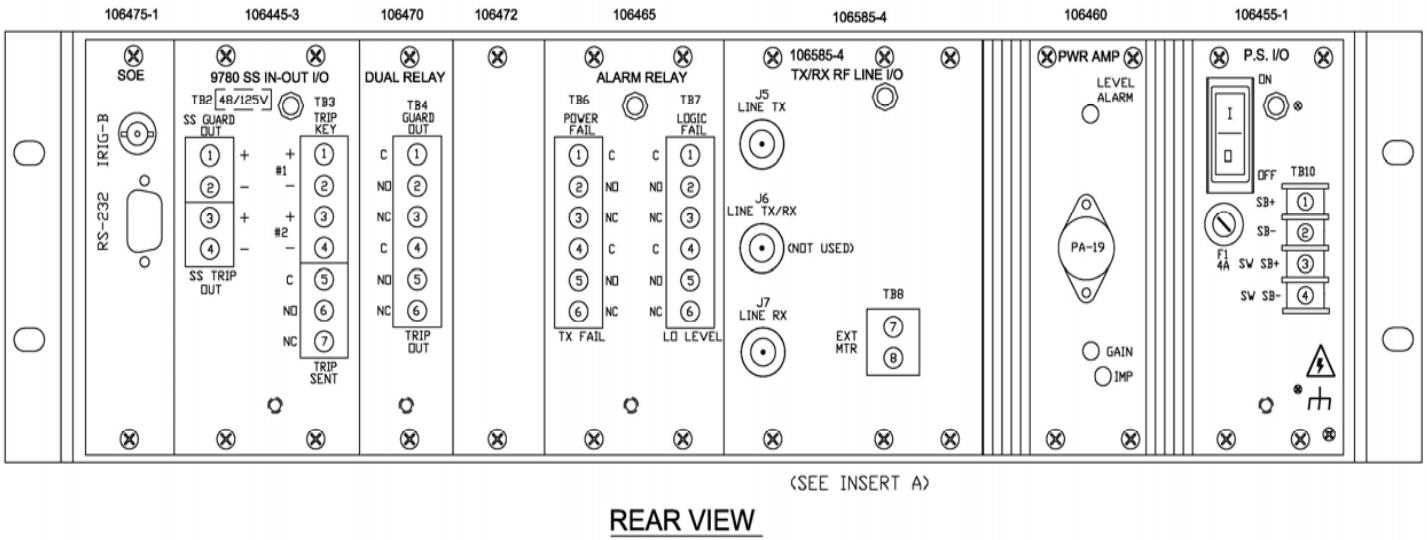

(SEE INSERT A)

REAR VIEW

RFL 9780 TX/RX

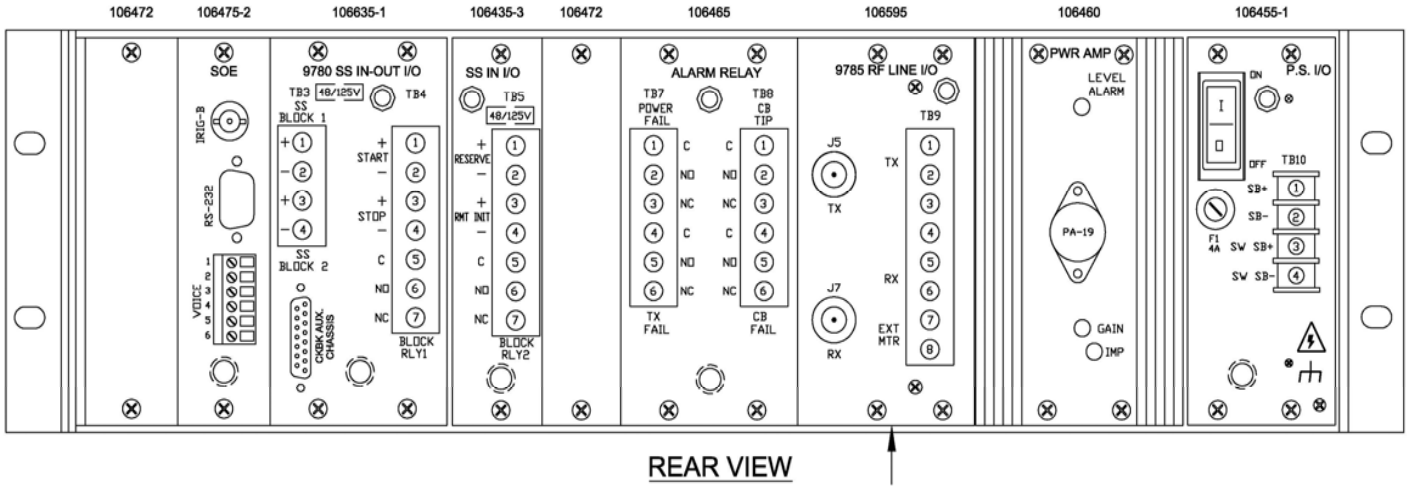

REAR VIEW

RFL 9785 On/Off

UPLC
Ametek

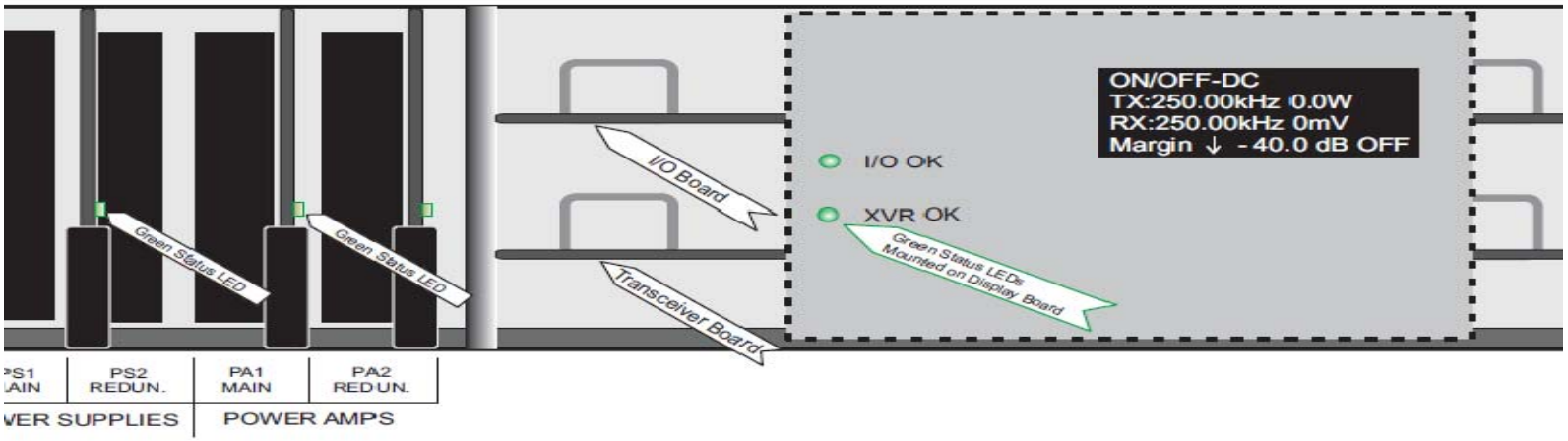

Chassis with Front Door Open

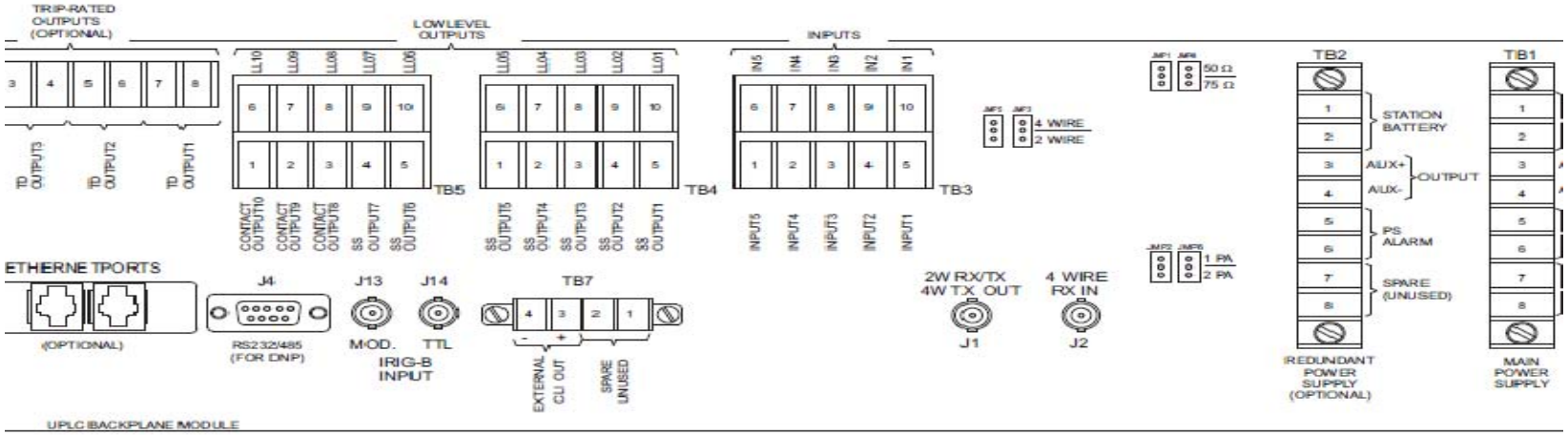

PLC System Puzzle

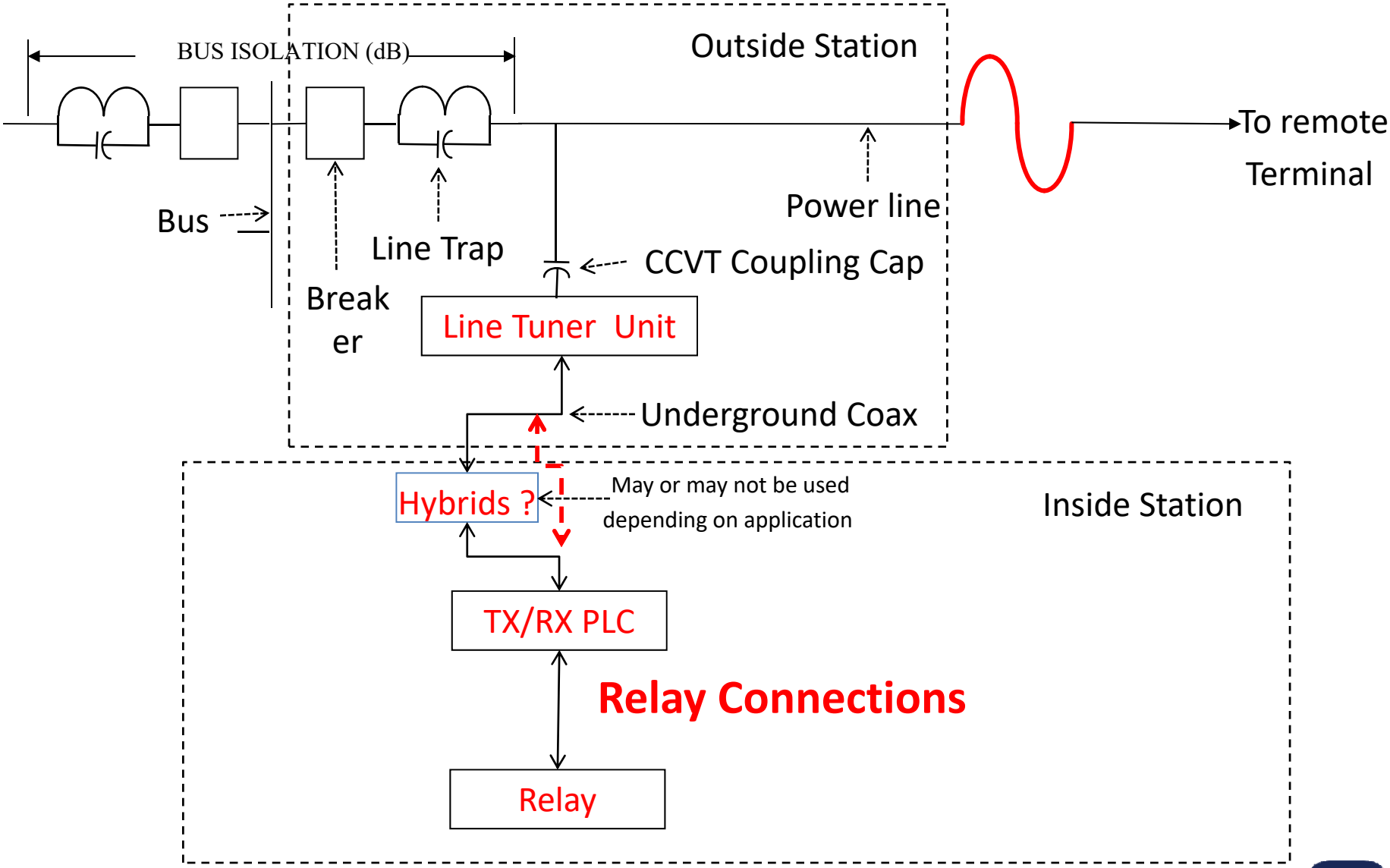

Relay Connections

- Hard Wired
  - Relay Output to PLC Input

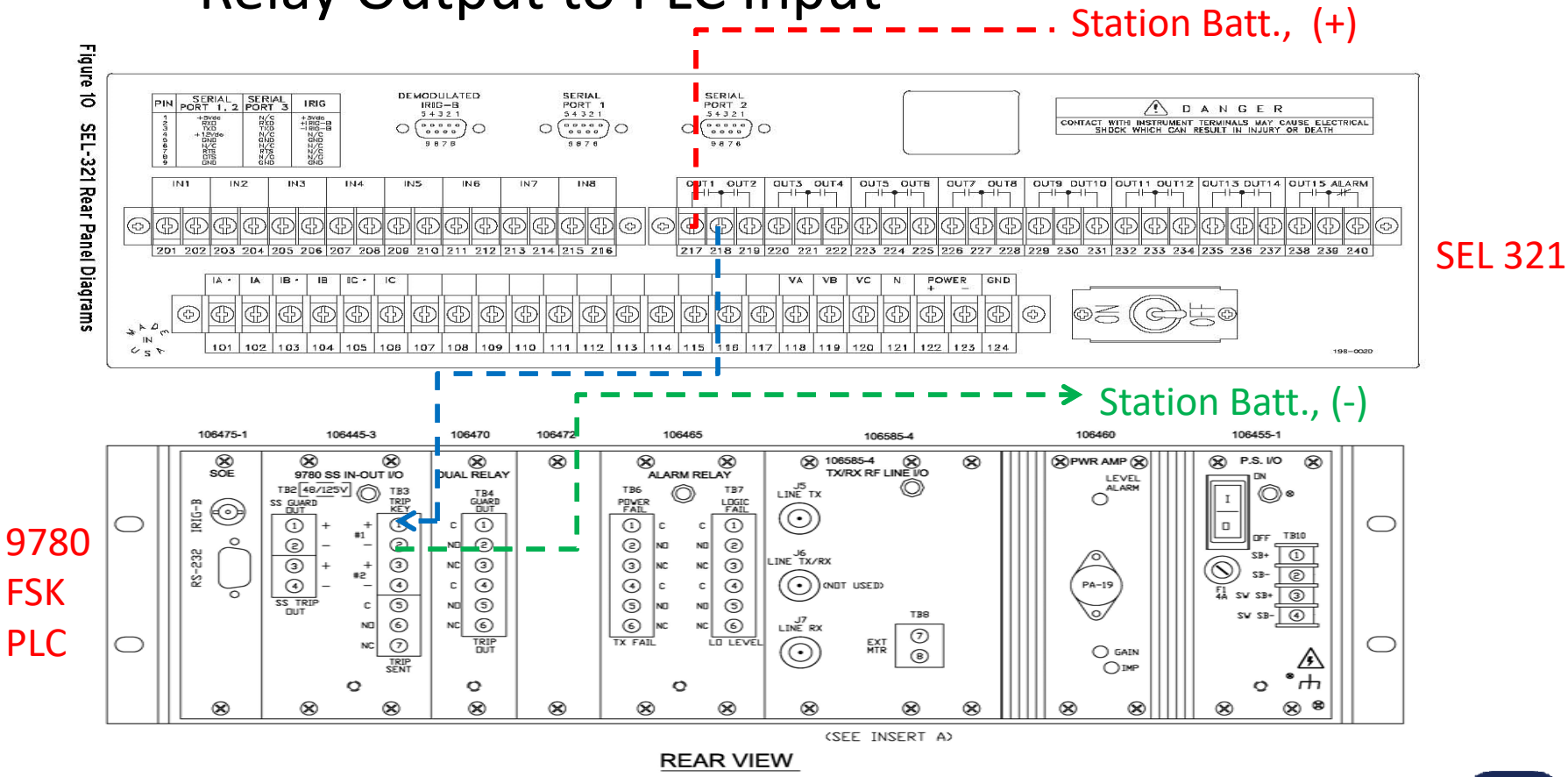

Relay Connections

- 61850
  - Ethernet to Ethernet

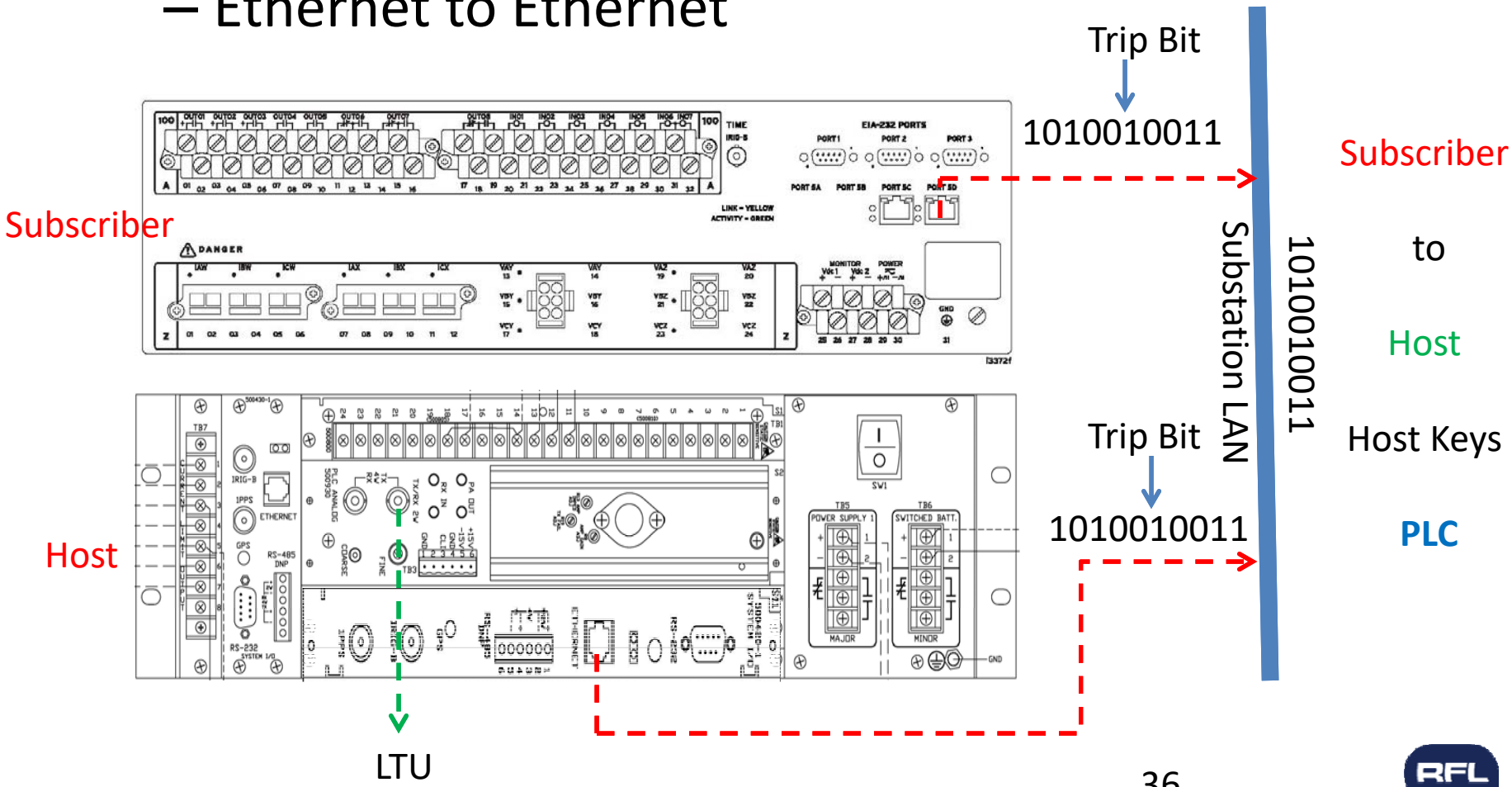

- So the Relay sends a signal to the PLC
- Then what happens?
- Let’s follow the Signal path of the TX and RX

Signal Path
G8K TX/RX

- Develop Signal @ desired Frequency
  - Transmitter
- Amplify Signal
  - Power Amp
- Filter for Harmonics
  - Output Filter
- Combine TX with RX send to LTU
  - Skewed Hybrid
- RX received and sent to the Transceiver module for processing
  - Levels etc. are viewed via software

TX Functions

G8K Block Diagram FSK

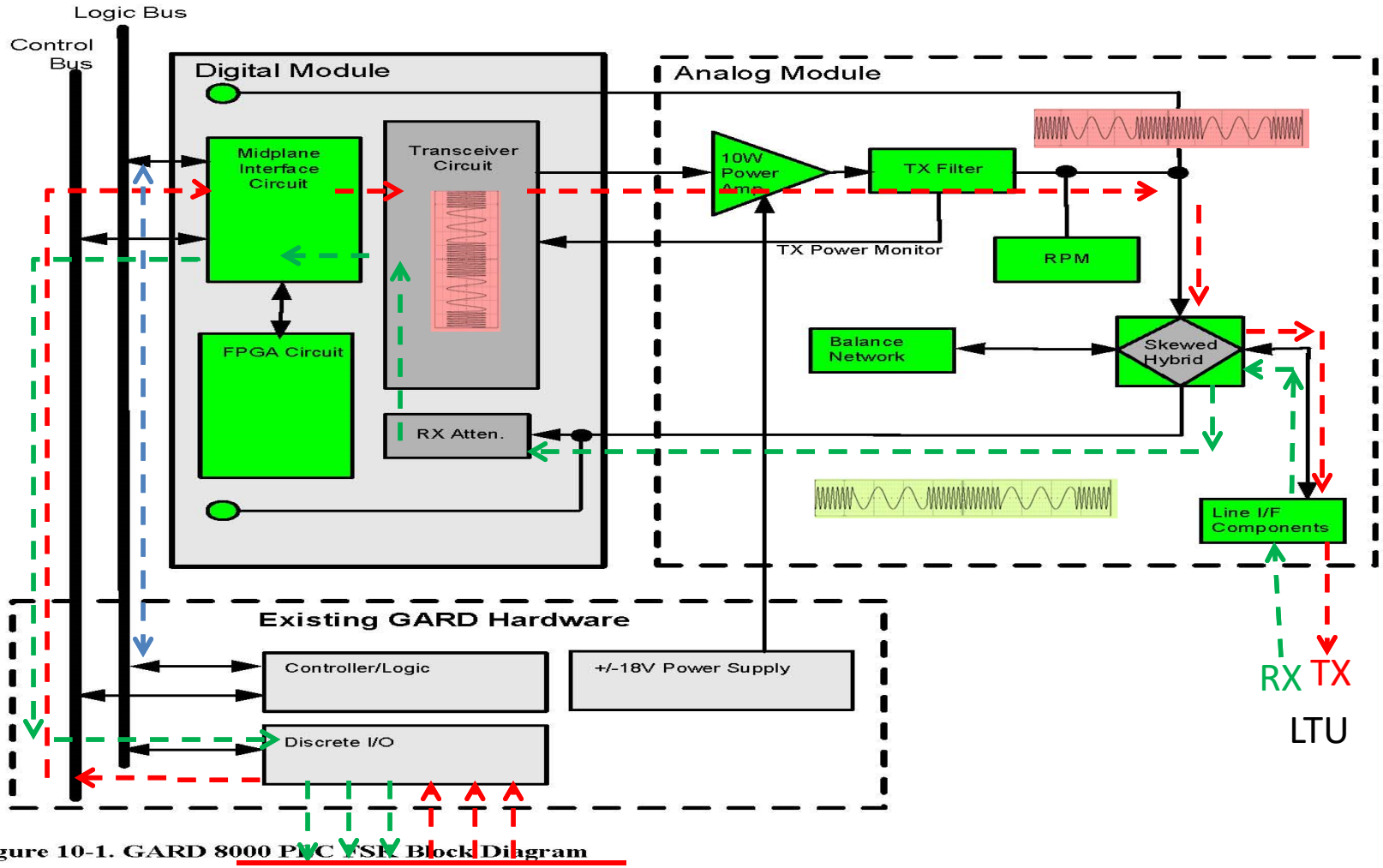

Figure 10-1. GARD 8000 PLC FSK Block Diagram

Relay Connections

G8K Block Diagram ON/OFF

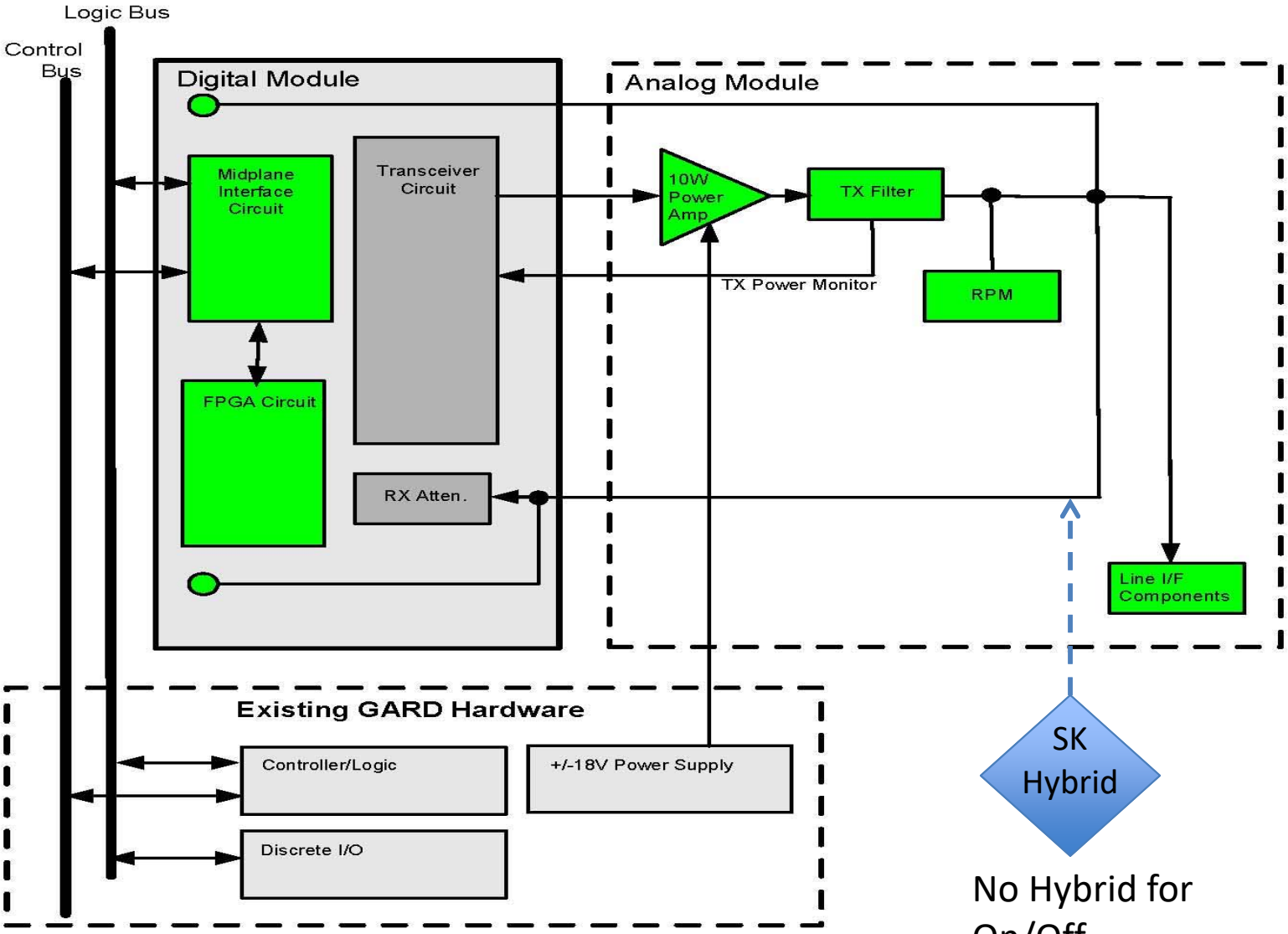

Figure 10-3. GARD 8000 PLC On/Off Block Diagram

SK Hybrid

No Hybrid for On/Off

Signal path for 9780

TX

- Develop Signal @ desired Frequency
  - Transmitter
- Amplify Signal
  - Power Amp
- Filter for Harmonics
  - Output Filter

- Combine TX with RX send to LTU
  - Skewed Hybrid

RX

- Interface between the Input
  - RF Interface
- Incoming RF signals/shifted down to 4kHz
  - IF/BF
- Narrowband Filter/Signal monitoring circuit/Signal level indicator
  - CLI
- Carrier Envelope Detector/Filter, Frequency Discriminator
  - Limiter/Slicer

Relay Keys
the Input

9780 Block Diagram FSK

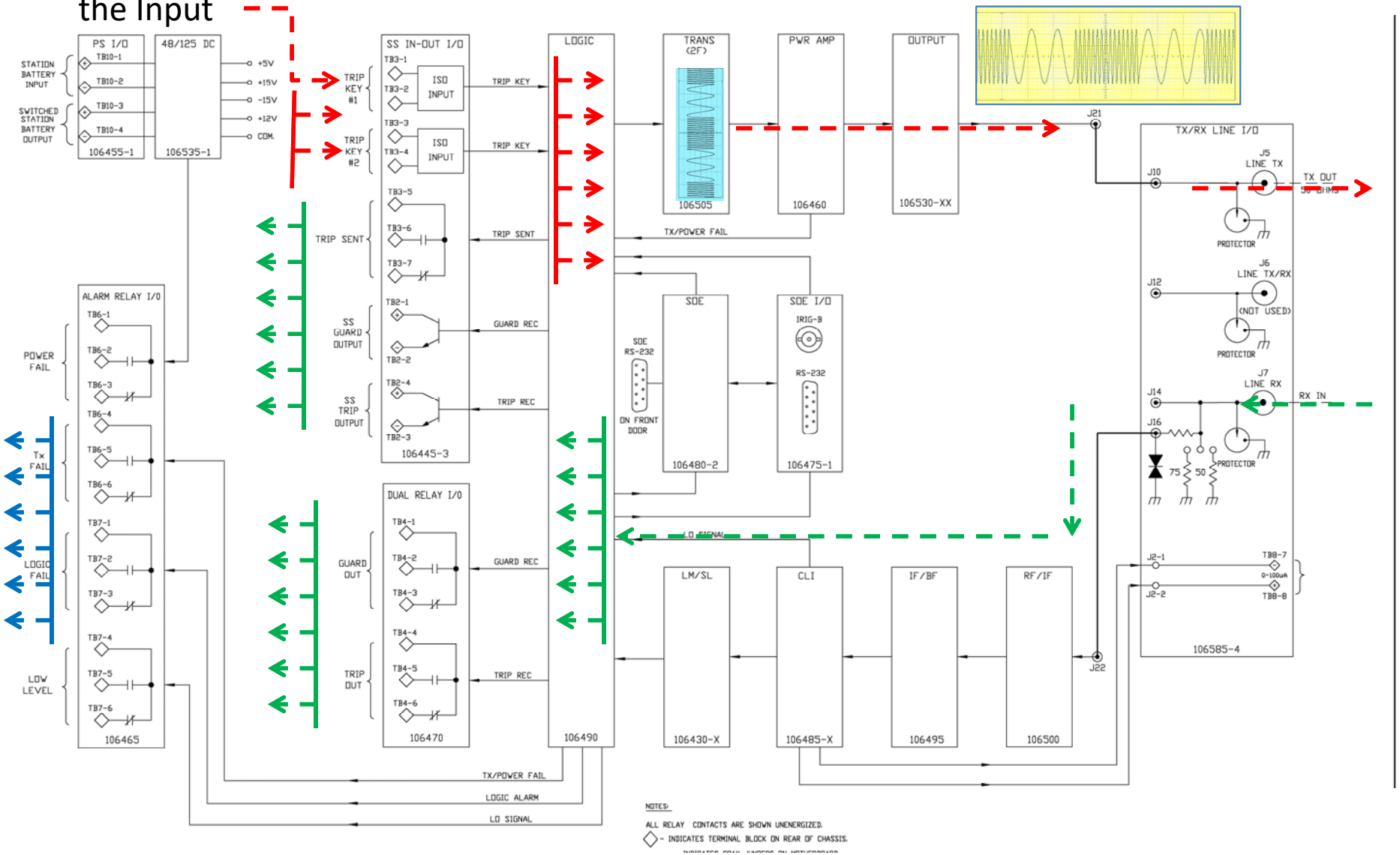

Output signal Levels for 10 Watt system

- TX Levels

Most system are 1 Watt/10 Watt

  - On/Off
    - Blocking/Un-Blocking
      - Full Power = 10 Watts or ? dBm
      - Reduced Power = 1 Watt or ? dBm
  - FSK
    - Guard
      - 30 dBm or ? Watts
      - *Could be higher*
    - Trip
      - 40 dbm or ? Watts

Termination

- TX
  - Typically (almost always) 50Ω
- RX
  - Typically (almost always) 50Ω
  - Occasionally 75Ω
- SCE who measures all Audio at 600Ω
  - *Not incorrect if you always use 600Ω*
  - *Just change the reading on the meter.*

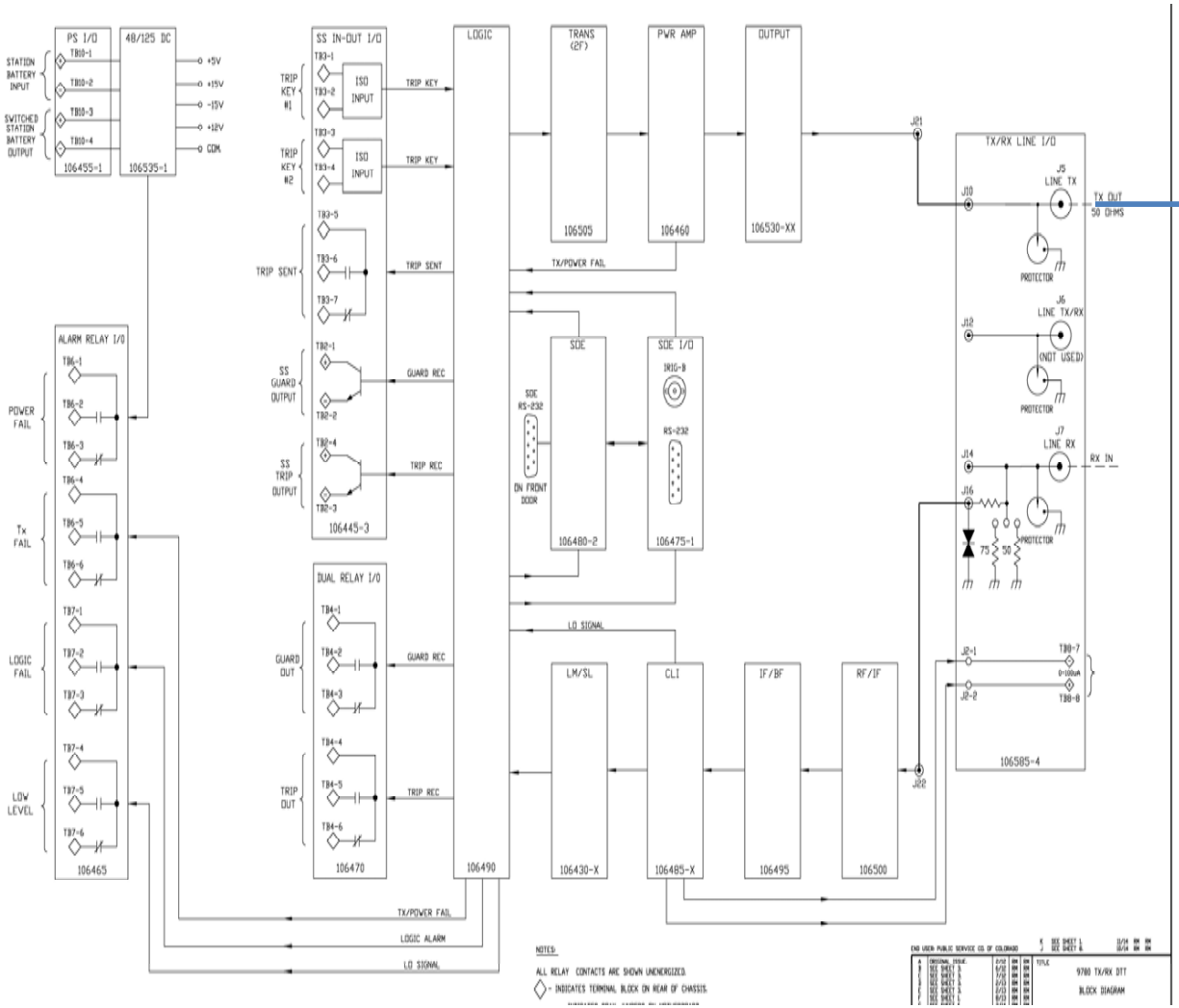

What Frequency/Frequencies or should we measure?

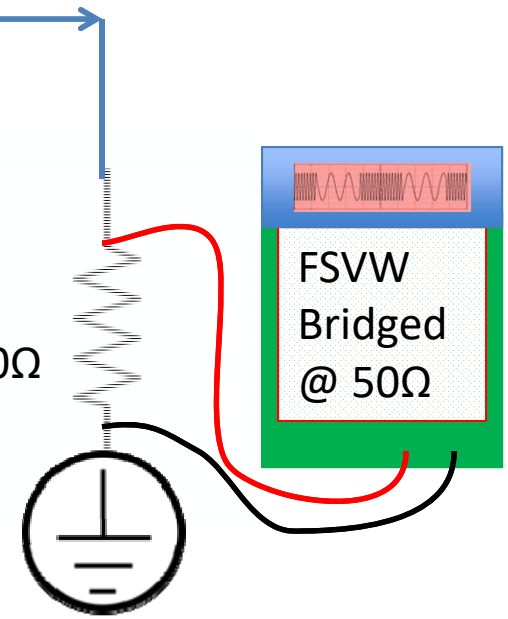

RFL

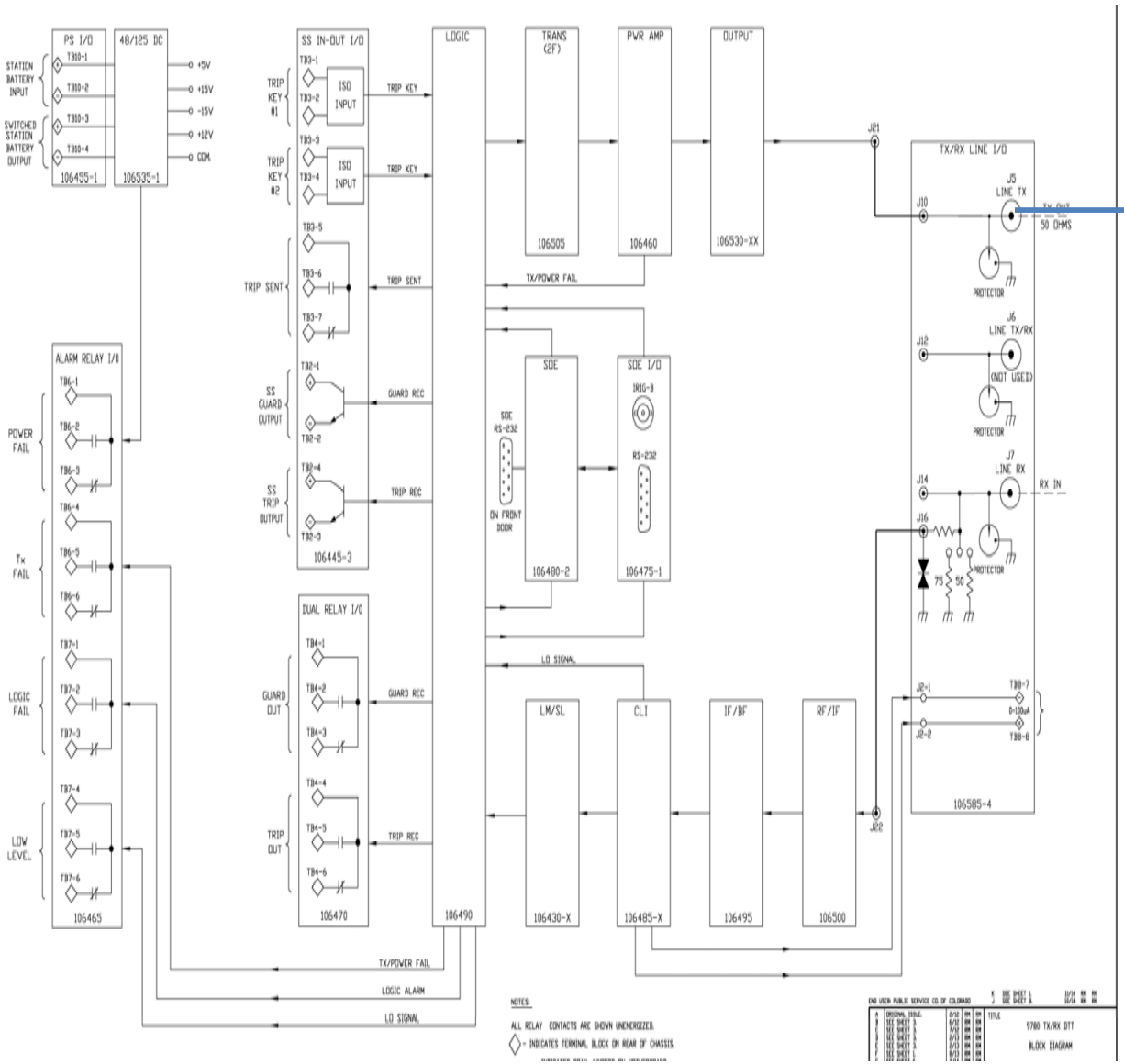

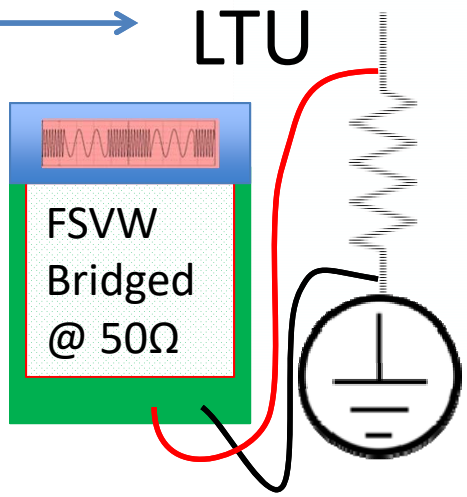

What Frequency/Frequencies or should we measure?

2-Wire vs. 4-Wire

hubbellpowersystems.com

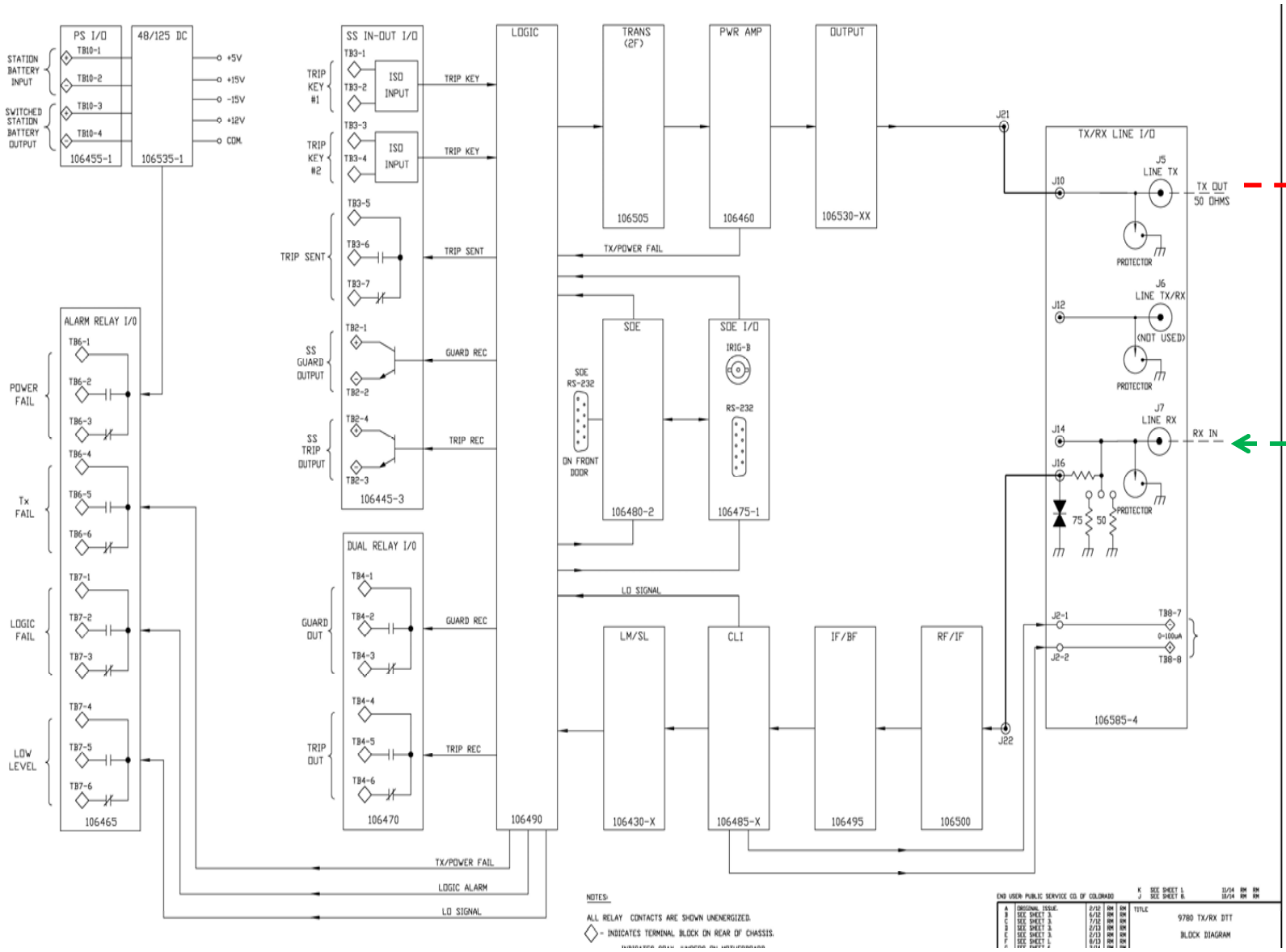

To LTU or Hyb
&
From LTU from Hyb

2-Wire vs. 4-Wire

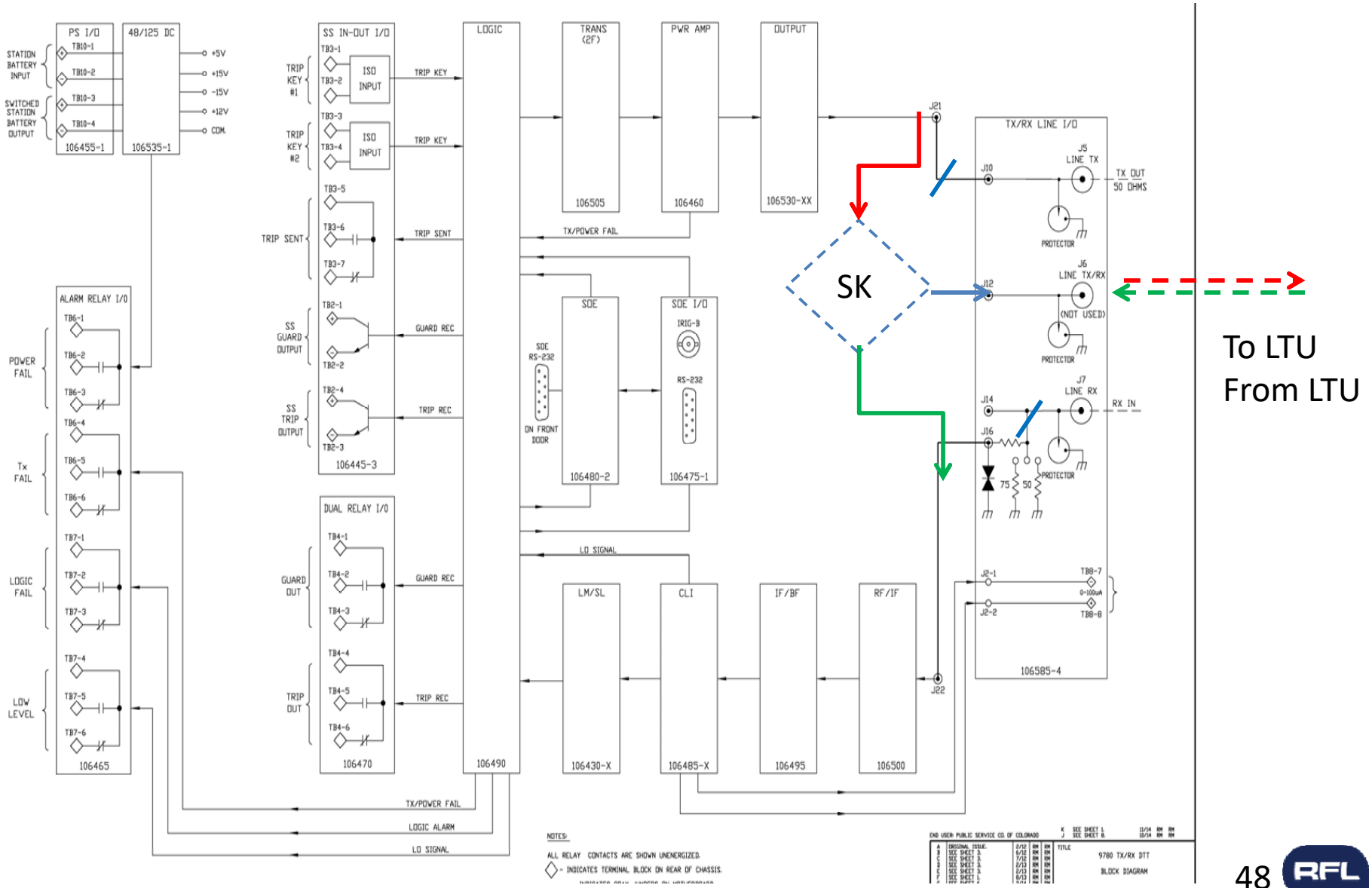

PLC System Puzzle

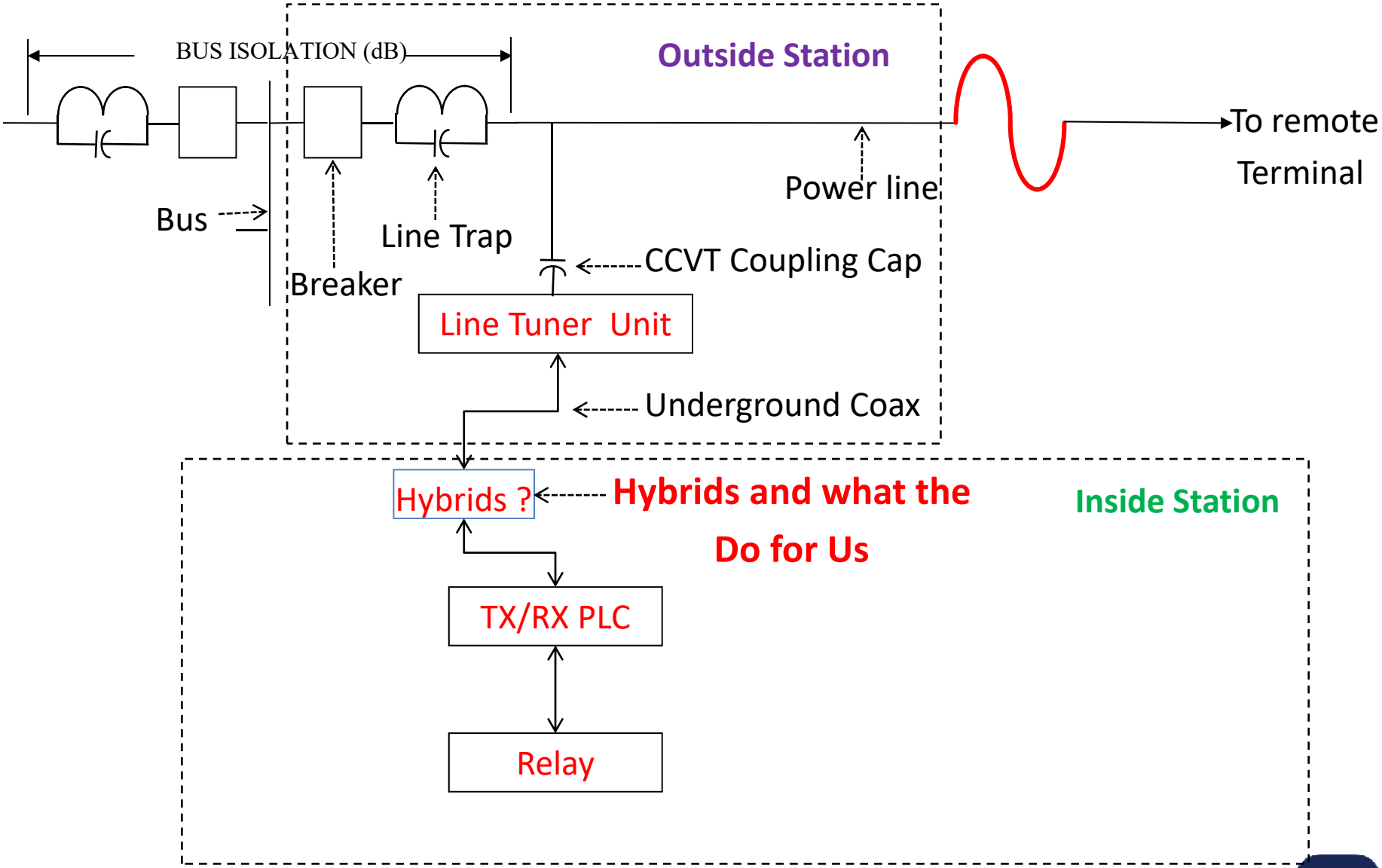

RF HYBRIDS

Auxiliary Coupling Devices
Why Use Them?

To Minimize

- Intermodulation
- Loading Influences

Function

- For Equipment Separation (TX/TX or TX/RX)
- For Channel Separation (F1, F2, F3)

Types

- Band Pass Filter: 0.5 dB Insertion Loss
- Series L/C Unit : 1.5 dB Insertion Loss
- Resistive Hybrid: 3.5 dB Insertion Loss
- Skewed Hybrid : 0.3/12.5 dB Insertion Loss

RF HYBRIDS

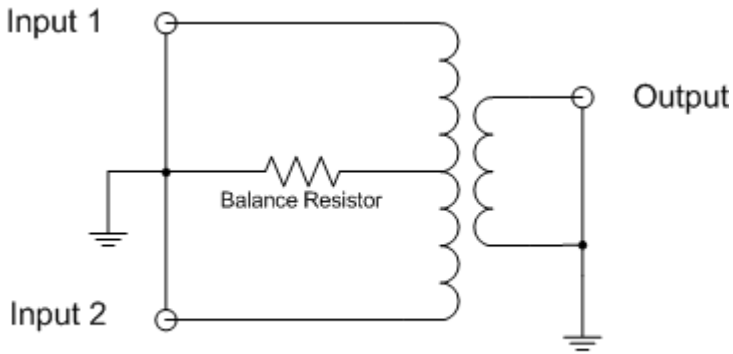

Balanced Resistive Hybrid

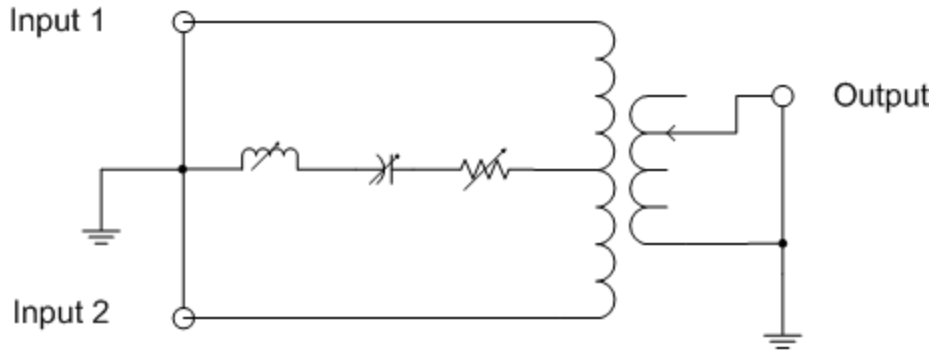

Balanced Reactive Hybrid

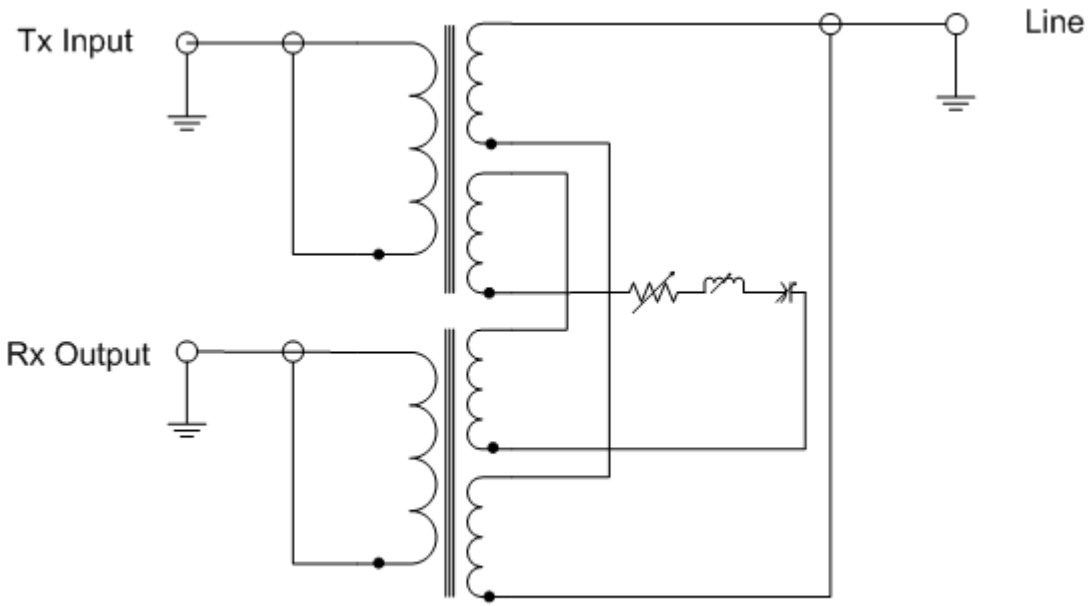

Skewed Hybrid

RF HYBRIDS

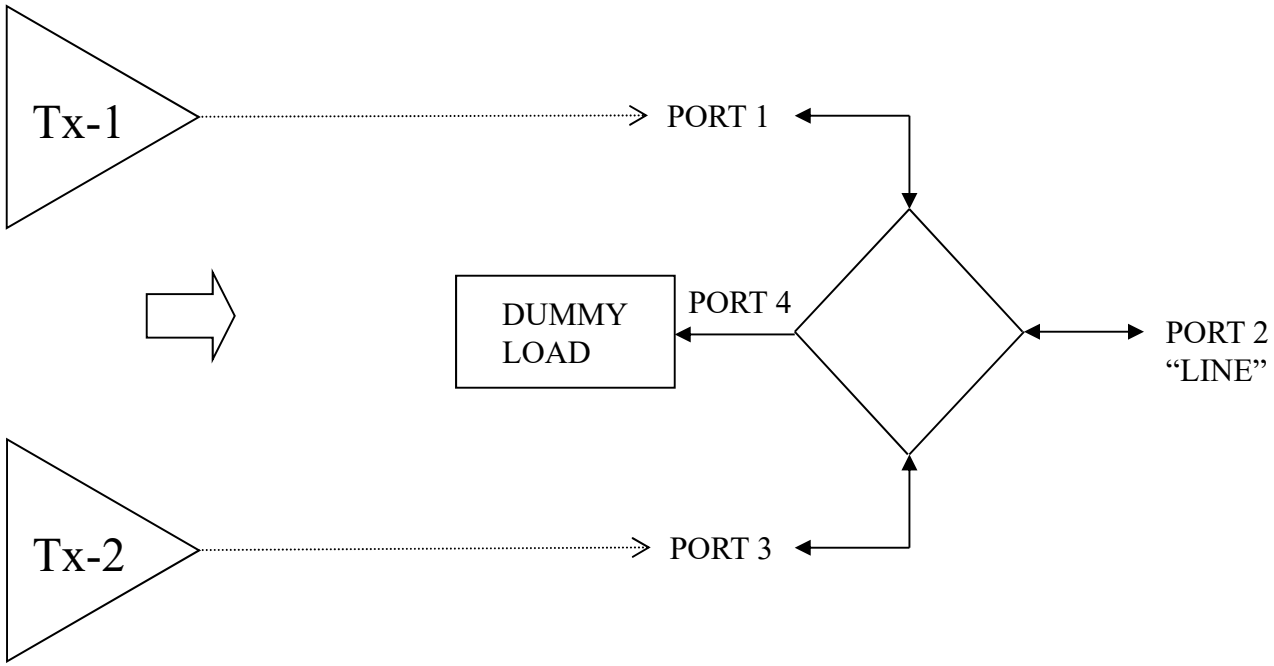

RULES:

1. INPUT TO ANY PORT IS SPLIT AND APPEARS AT THE ADJACENT TWO PORTS
2. DUMMY LOAD IMPEDANCE MUST BE ADJUSTED TO "BALANCE" PORT 2 IMPEDANCE
3. NO OUTPUT APPEARS AT THE OPPOSITE PORT.

Transformer Hybrid

Provides isolation between the two Transmitters

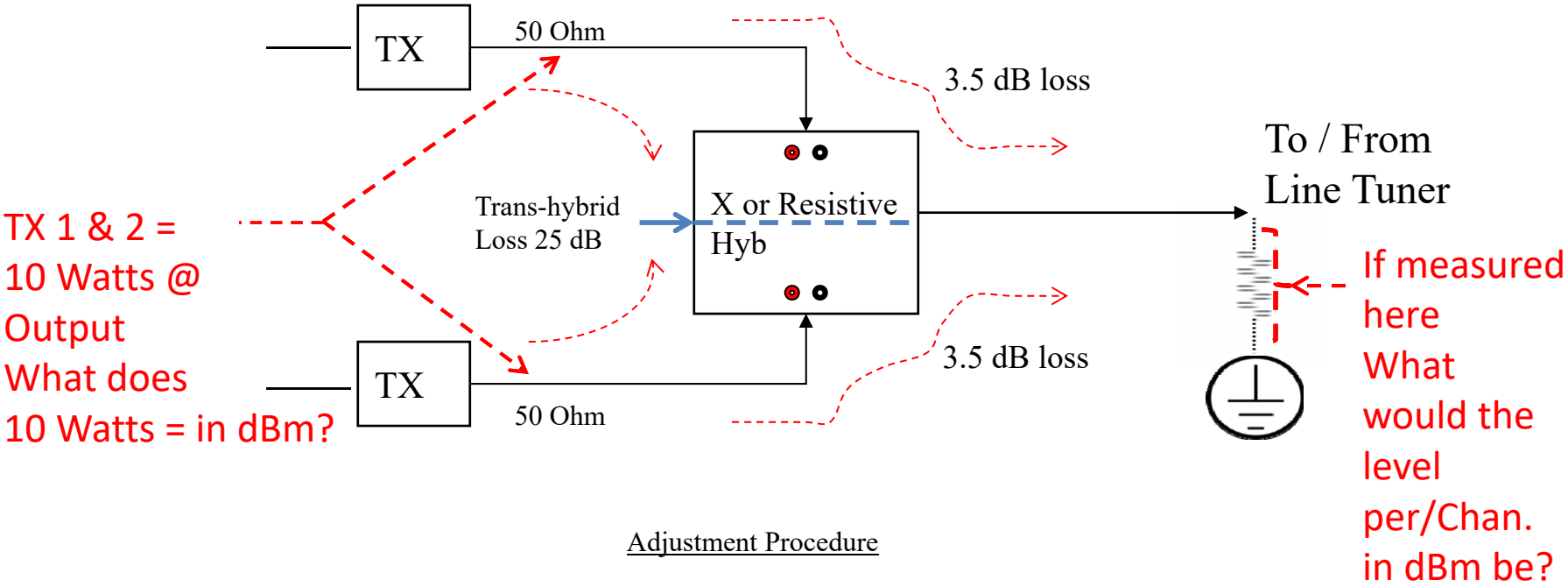

Adjustment Procedure

1. Measure and record the level of the transmitter No. 1

2. Measure and record the level of the transmitter No. 2

The 97 PLC Transformer Hybrid presents 3.5 dB of loss in either transmitting port, The hybrid provides greater then 25 dB of trans-hybrid loss when operating into the specified output impedance.

Skewed Hybrid

Provides isolation between transmitters and receivers

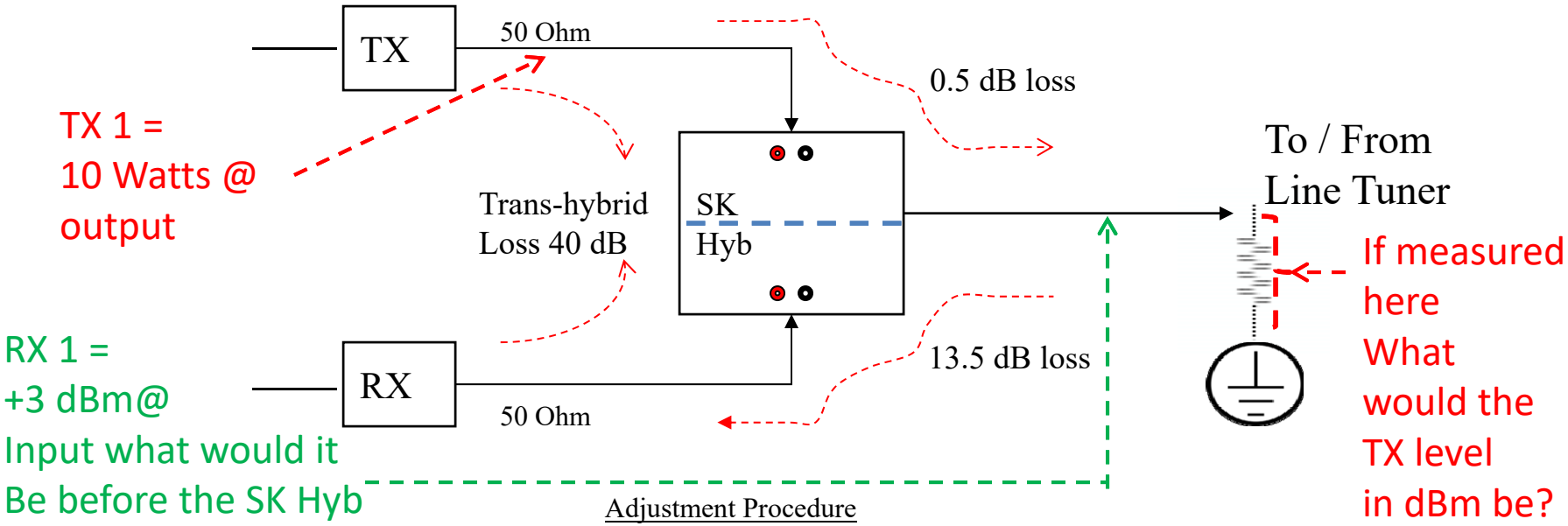

1. Measure and record the transmitter level at the transmitter port
2. Measure and record the level of the transmitter frequency at the receiver port.

The Skewed Hybrid presents 0.5 dB of loss in the transmitting path, and 13.5 dB of loss in the receiver path.
Hybrids can provide greater then 40 dB of Trans-hybrid loss when operating into the specified output impedance.

MULTIPLEXING WITH HYBRIDS

2 Transmitters + 2 Receivers

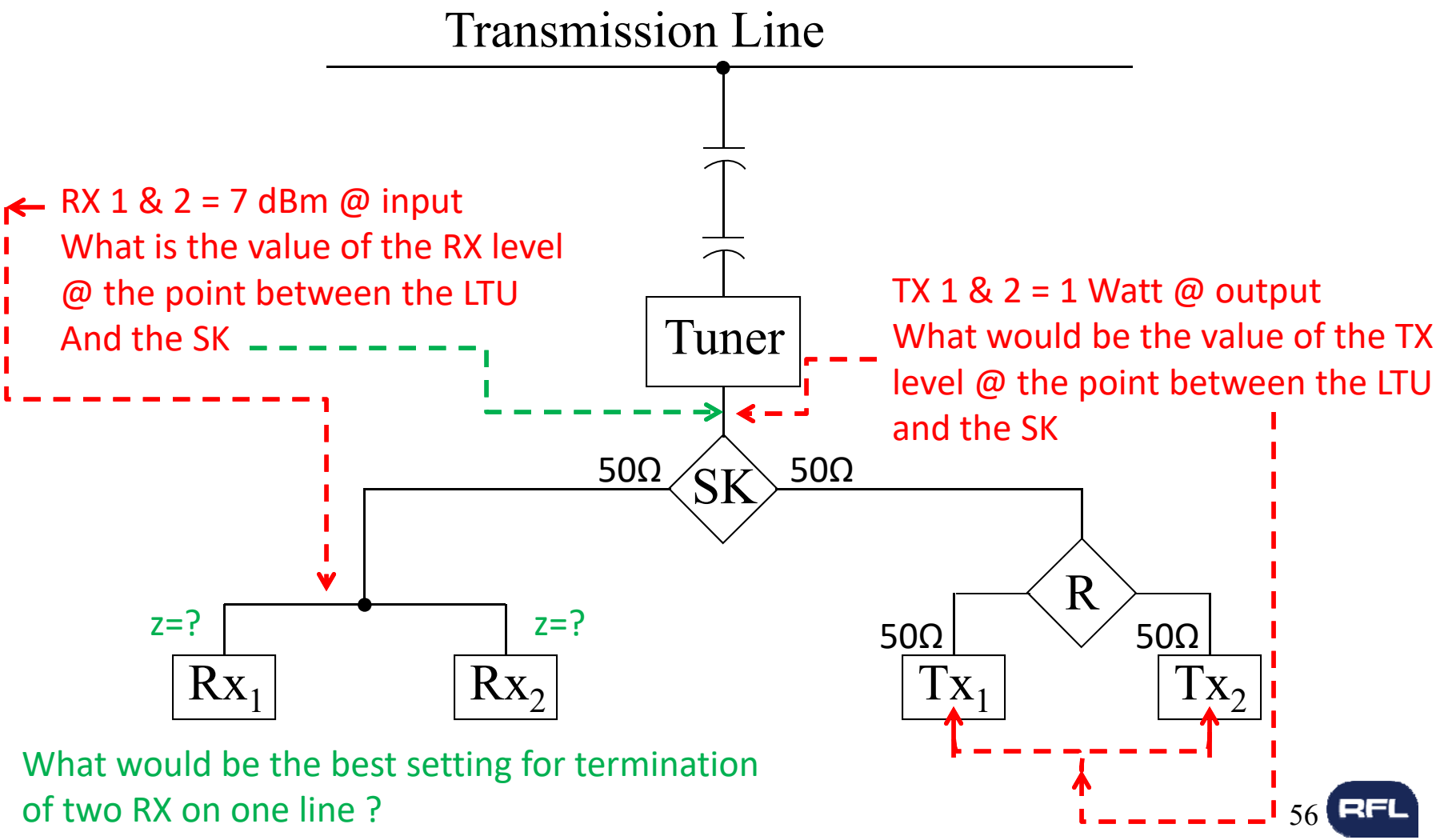

What would be the best setting for termination of two RX on one line ?

Line Tuners

Functions……Why?

- Couple Carrier with minimum loss
- Isolate Power Frequency
- Separate Carrier Signals (sometimes)

Single Frequency Line Tuner

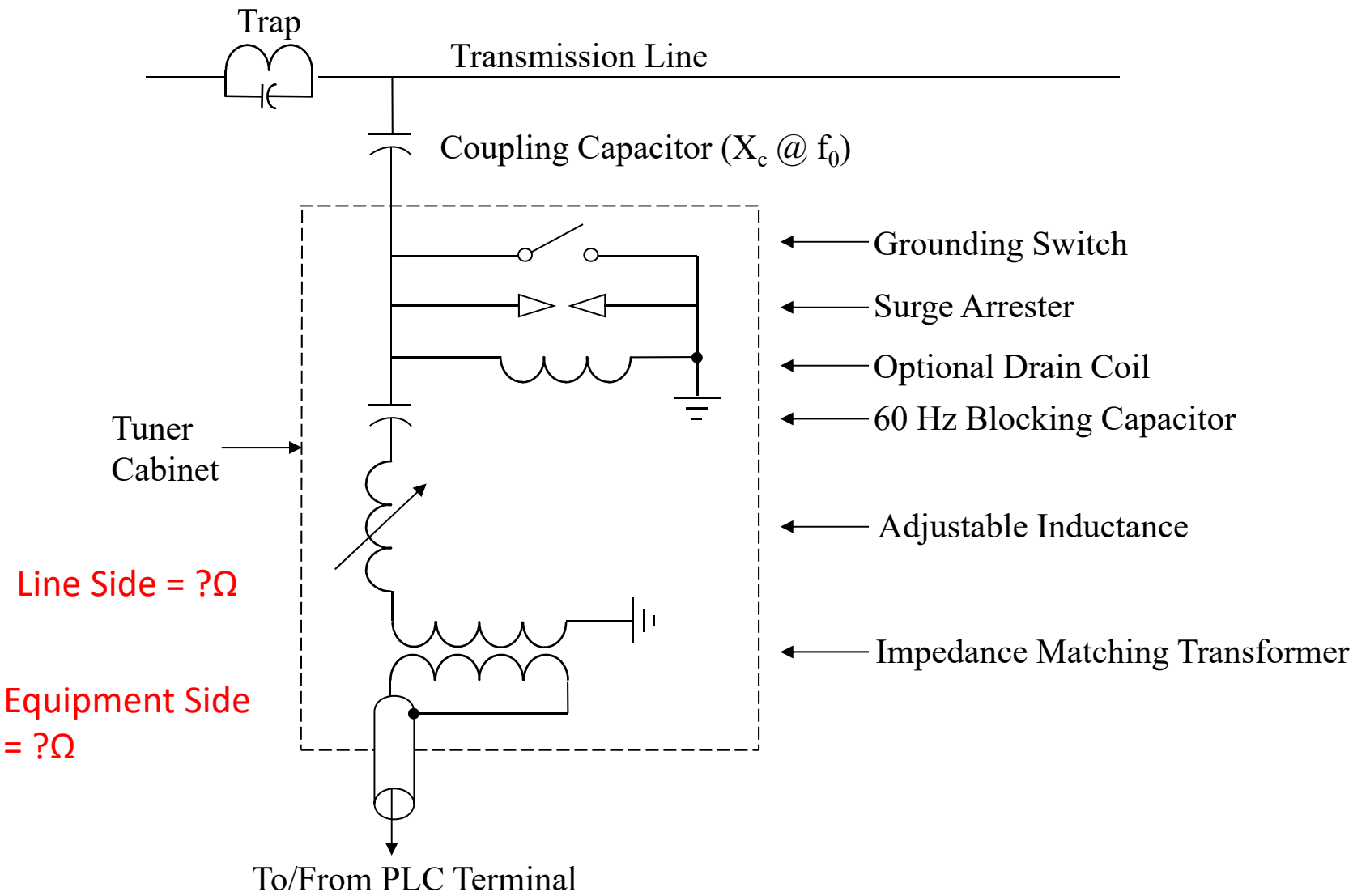

Ca	Characteristics equipment-side impedance: 50 Ω (αr ≥12dB)					
	Line impedance: 300 Ω			Line impedance: 400 Ω		
	Fc (kHz)	Equipment-side jumpers	Line-side jumpers	Fc (kHz)	Equipment-side jumpers	Line-side jumpers
2 nF	198	TA-TB / TD-TF	T1-B2 (UAPS) T6-CS4 LS4-B1 (UAPS) LS8-B1 (UAPC)	177	TA-TC / TD-TF	T1-B2 (UAPS) T6-CS4 LS2-B1 (UAPS) LS4-B1 (UAPC)
4 nF	91	TA-TC / TD-TF	T1-B2 (UAPS) T6-CS8 CS2-CS7 LS2-B1 (UAPS) LS6-B1 (UAPC)	71	TA-TC / TD-TF	T1-B2 (UAPS) T6-CS8 CS4-CS7 LS2-B1 (UAPS) LS8-B1 (UAPC)
6 nF	60	TA-TC / TD-TF	T1-B2 (UAPS) T6-CS8 CS6-CS7 LS2-B1 (UAPS) LS8-B1 (UAPC)	51	TA-TC / TD-TF	T1-B2 (UAPS) T6-CS8 CS6-CS7 LS1-B1 (UAPS) LS7-B1 (UAPC)
8 nF	45	TA-TC / TD-TF	T1-B2 (UAPS) T6-CS8 CS4-CS5 / CS6-CS7 LS1-B1 (UAPS) LS7-B1 (UAPC)	42	TA-TC / TD-TF	T1-B2 (UAPS) T6-CS8 CS2-CS5 / CS6-CS7 LS1-B1 (UAPS) LS8-B1 (UAPC)
10 nF	37	TA-TC / TD-TF	T1-B2 (UAPS) T6-CS8 / CS2-CS3 CS4-CS5 / CS6-CS7 LS1-B1 (UAPS) LS8-B1 (UAPC)	40	TA-TC / TD-TF	T1-B2 (UAPS) T6-CS8 / CS2-CS3 CS4-CS5 / CS6-CS7 LS1-B1 (UAPS) LS8-B1 (UAPC)

Table 3 (Cont.) Available cut-off frequencies for the high-pass tuning circuit

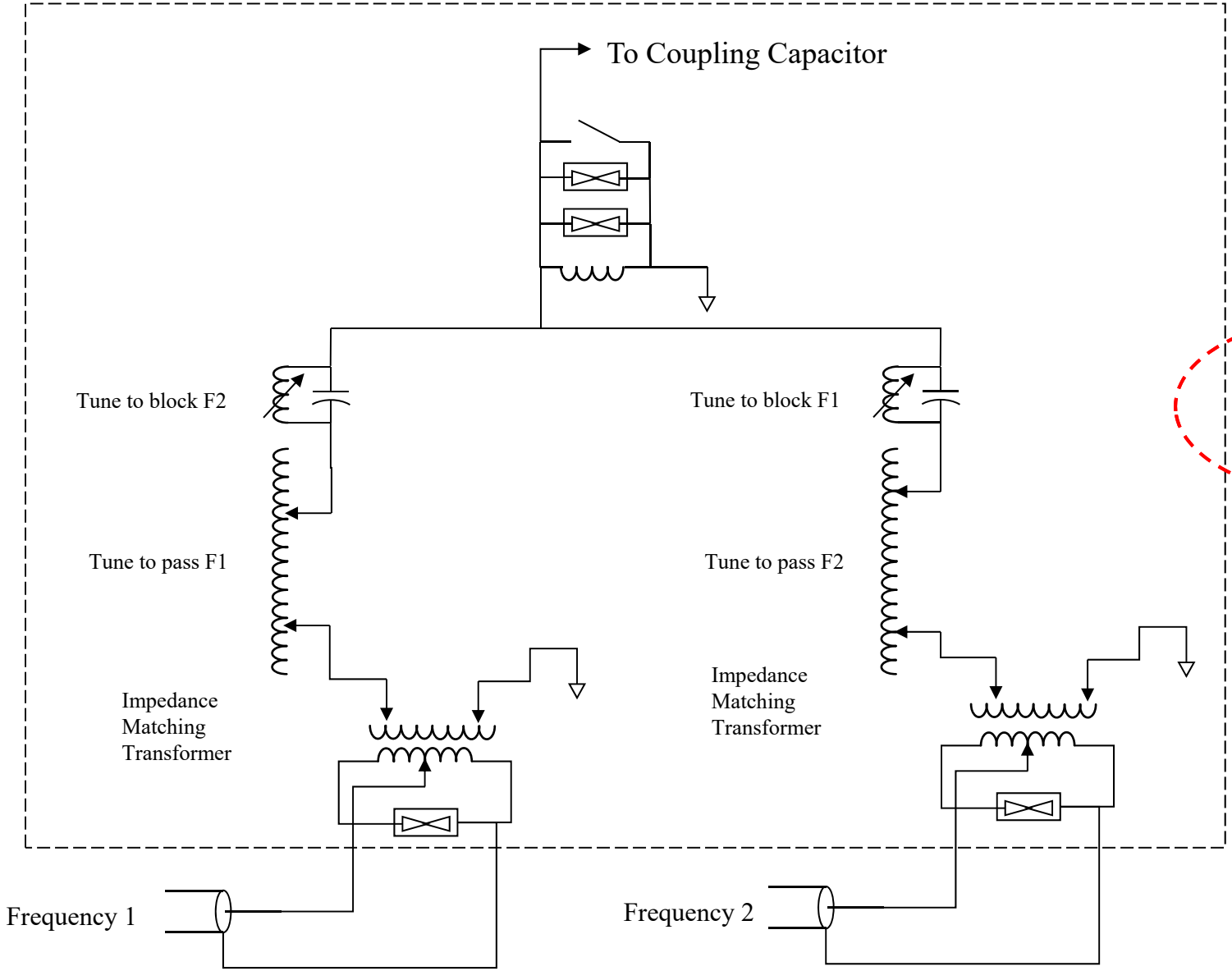

Two Frequency Line Tuner

Frequency Separation
30 – 200 kHz.
25% of higher freq.
(25kHz. Min)

200 – 500 kHz.
40% of higher freq.

PLC System Puzzle

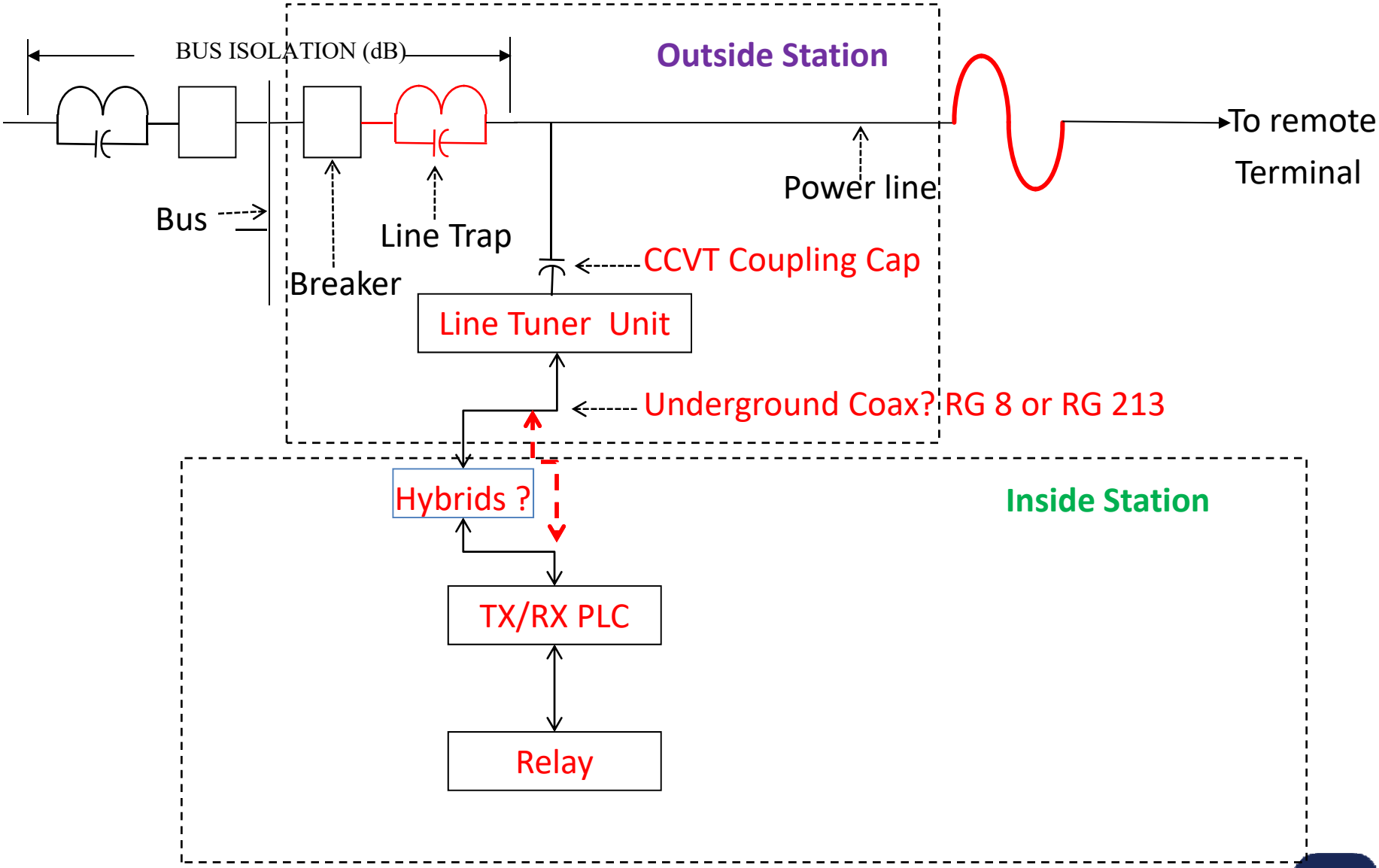

COUPLING CAPACITORS

COUPLING CAPACITOR

VOLTAGE TRANSFORMERS

COUPLING CAPACITORS

hubbellpowersystems.com

- The coupling capacitor operates with the line tuner to form a resonant, or bandpass filter at the carrier frequency.

- Higher values of coupling capacitance provide greater RF bandwidth.

COUPLING CAPACITORS

- The coupling capacitor, and drain coil form a frequency dependent voltage divider.

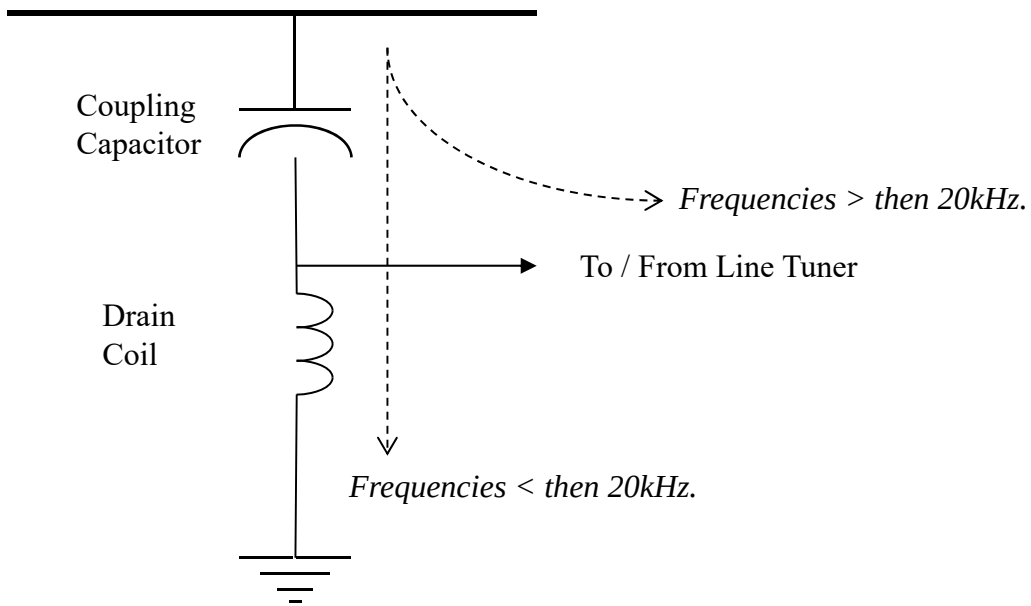

PLC System Puzzle

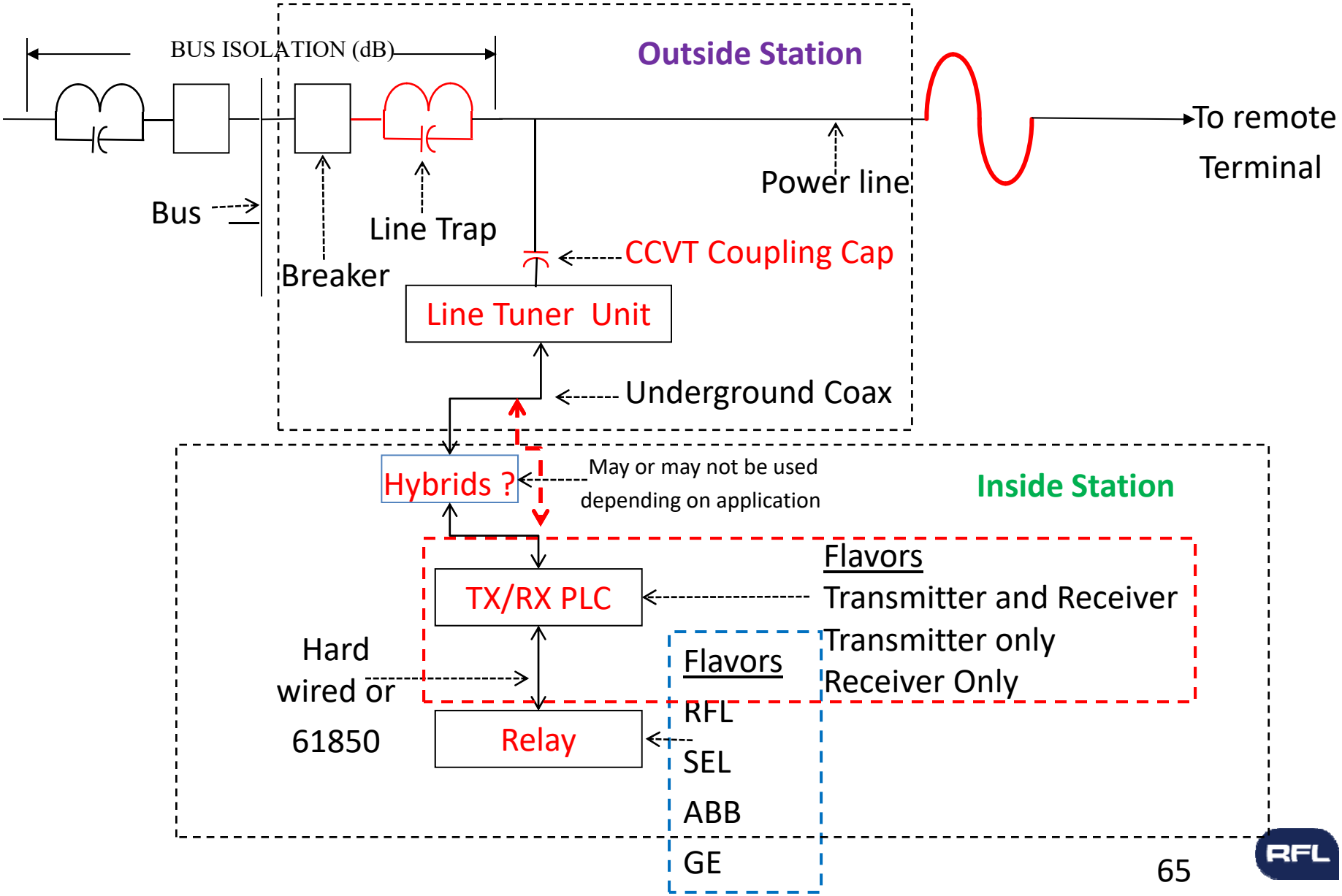

LINE TRAPS

"THE THREE BASICS"

1. A line trap must provide high impedance at carrier frequencies and negligible impedance at the power frequency.

2. A line trap must be designed to operate at rated continuous current and insure long life (operating temperature vs. materials capability).

3. A line trap must be designed to withstand forces resulting from power short circuit forces and transient overvoltages.

Basic Line Traps

- Single Frequency Traps
- Two Frequency Traps
- Fixed Wide Band Traps
- Adjustable Wide Band Traps

Single Frequency Line Trap

- Tuning range defined as the band of frequencies over which the impedance magnitude is greater than 400 Ω.
- Tuning range is greater with larger inductance.
- Typically less then 0.5mh inductance, 0.265mh very common.

Single Frequency Line Trap

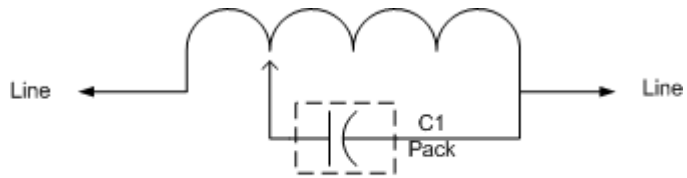

Single Frequency Resonant Trap

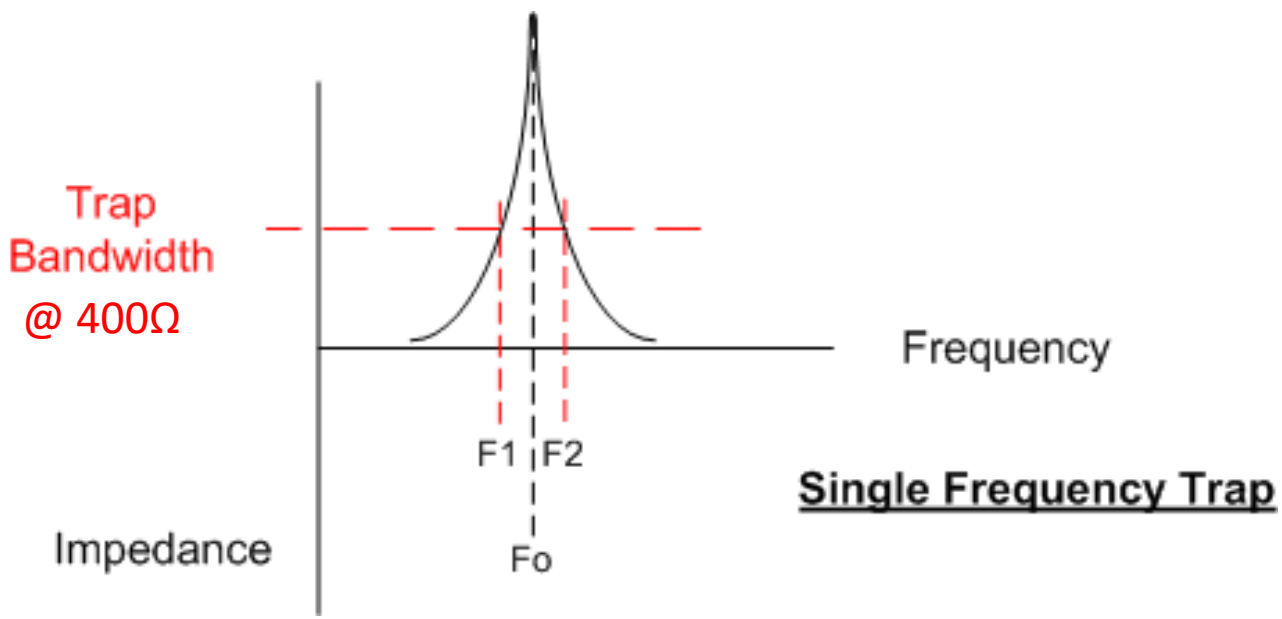

Single Frequency Trap

Two Frequency Traps

hubbellpowersystems.com

- Has a blocking band around two distinct resonant peaks.
- Typically used with two frequency line tuner.
- Requires 25kHz. frequency separation, or 25% of the higher frequency, whichever is greater.

Two Frequency Line Trap

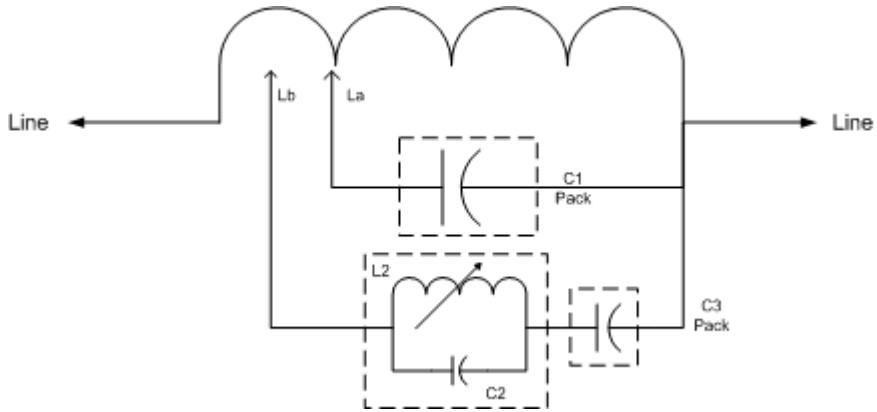

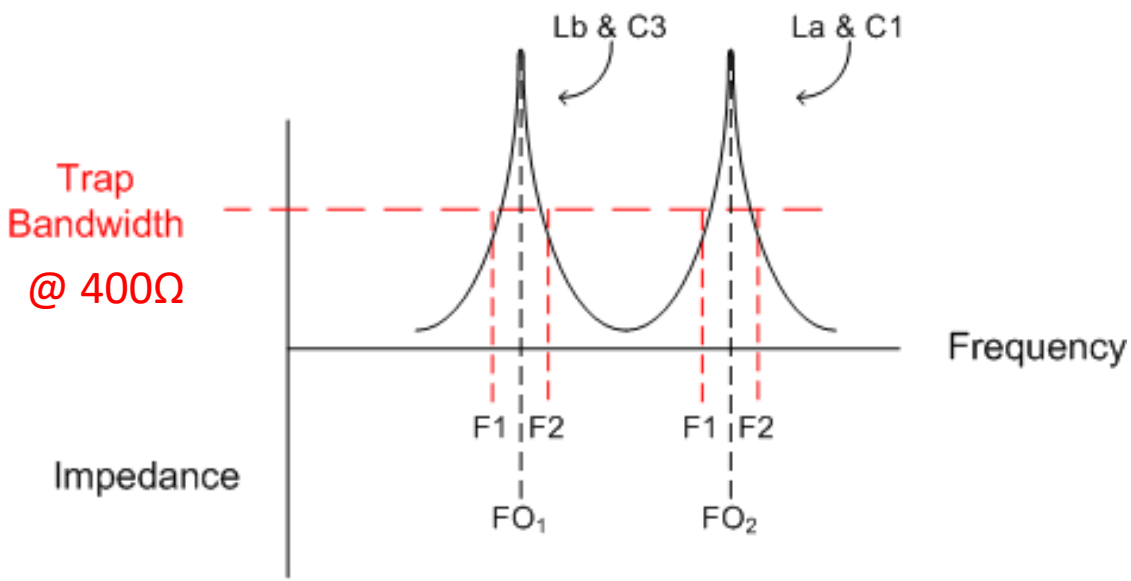

Dual Frequency Trap

Adjustable Wideband Traps

- Consists of a inductance coil, and a field adjustable tuning pack.
- Typical coil inductance range 0.265 to 1.59mh.
- Uses same bandwidth formula as fixed wideband trap.
- Typical terminating resistance 400, 600, or 1,000 Ω

Adjustable Wideband Traps

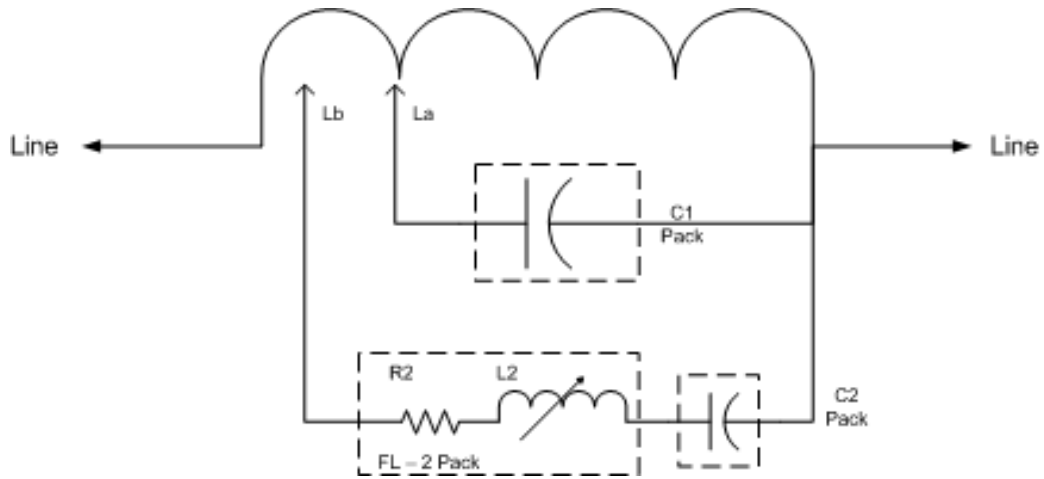

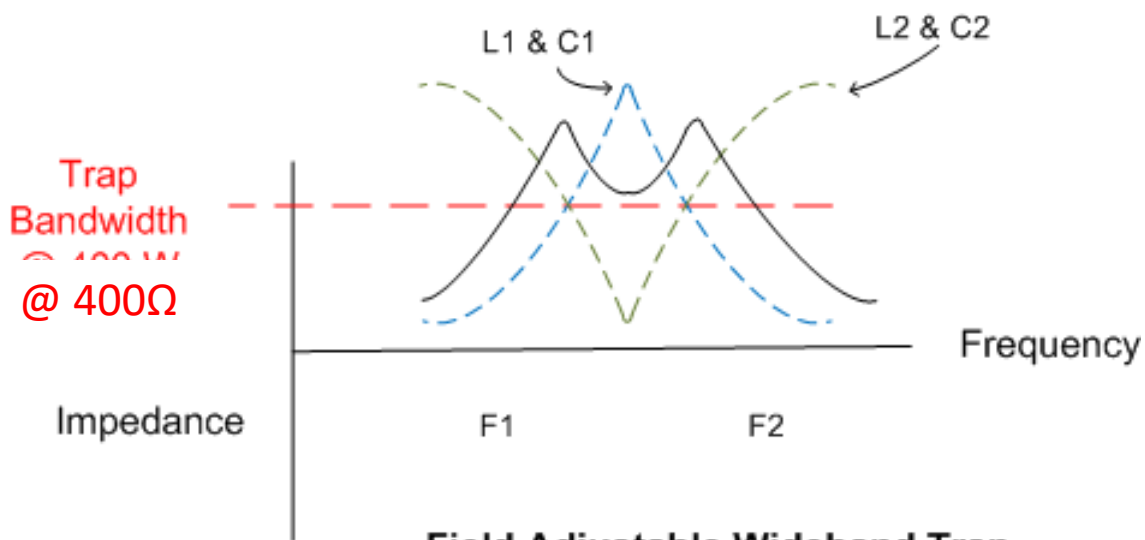

Field Adjustable Wideband Trap

ADJUSTABLE WIDEBAND

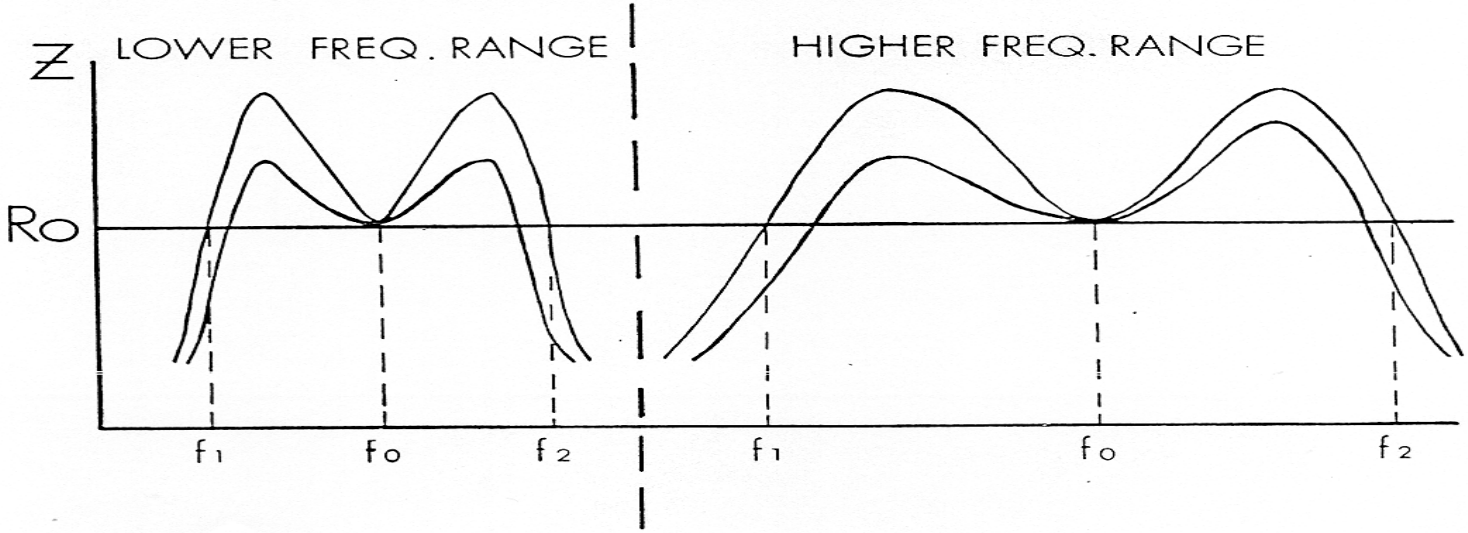

GREATER BANDWIDTH AT HIGHER FREQUENCIES

f_1 = LOWER FREQ.

f_2 = HIGHER FREQ.

$f_o = \sqrt{f_1 \times f_2}$ = GMF

$B.W. \cong f_o^2$

$B.W. \cong L$ (IND.)

PLC Losses

hubbellpowersystems.com

- Transmitter frequency
- Type of line construction
- Line geometry
- Phase conductor size,
- Material, surface, condition, etc.
- Ground wire size,
- material, location, etc.
- Method of coupling Type and location of transpositions Weather conditions
- Ground conductivity
- Insulator leakage

PLC Losses
IEEE Std 643-2004

- Losses on the line are due lengths and weather conditions
  - A single transposition in a very long line can result in 6 dB of added loss.
  - Typically for a 100 mile 10 to 20 dBm
- Coupling losses are minimal and mostly due to tuning
- Hybrids have fixed losses
  - R (X) Hybrid 3.5 dBm per port
  - Skewed Hybrid TX= .5 dBm/RX = 12dBm

PLC System Puzzle

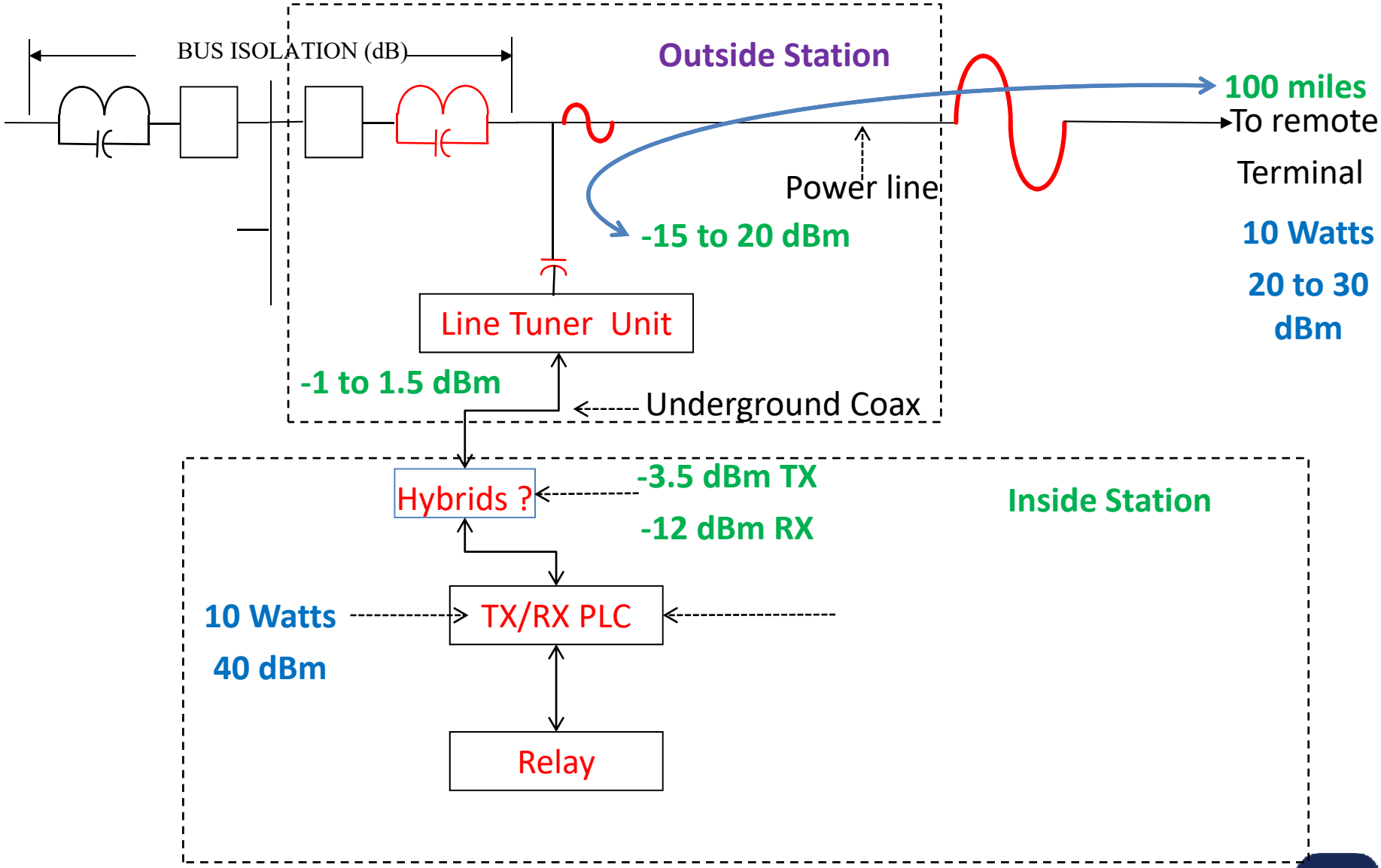

Let's Review.

hubbellpowersystems.com

- What Applications can the PLC be used?
- What is the Communication link for the PLC?
- What is the Difference between On/OFF and FSK?
- What is a FSVM? Why do we use this?
- What is the difference between dB and dBm?
- 30 dBm =? W 40dBm=? W
- What is the Nominal RX level?
- What is the Guard Signal used for?

Let's Review.

hubbellpowersystems.com

- What is the Trip Signal used for?
- How does the Trip Signal become active
- What is the Typical Termination value?
- What is a X or Resistive Hybrid used for?
- What is a Skewed Hybrid used for?
- What is the Line Tuner purpose?
- What is the Coupling Capacitors purpose?
- Why do we need a Line Trap ?
- What is 2 + 2?