DC Ground Detection

THE EVOLUTION OF A RESISTIVE JUMPER

ERIC HAUT (SR. SUBSTATIONS M/R TECHNICIAN)

Disclaimer:

The purpose of this presentation is to encourage consideration into the nature of DC circuits. The content of this presentation is not meant to suggest any particular methodology.

If you leave this class with a broader understanding of DC circuits and / or grounds, then the presentation will have performed its function.

How the creation of a home-made tool led to a better understanding of DC circuits and DC grounds.

MY BACKGROUND:

- Navy Nuclear Electrician 83 – 89.
- IBEW Wireman LMSC (Sunnyvale, Ca.) 89 – 92.
- Metering Electrician City of Palo Alto 92 – 01.
- Meterman Portland General Electric 01 – 06.
- Meter/Relay Technician Portland General Electric 06 – present.
- Apprentice Instructor 93 – present.
- Lectured at NW Meter School approximately 12 years.

ORIGINS OF THE RESISTIVE JUMPER

MANUALLY ASSERTING INPUTS

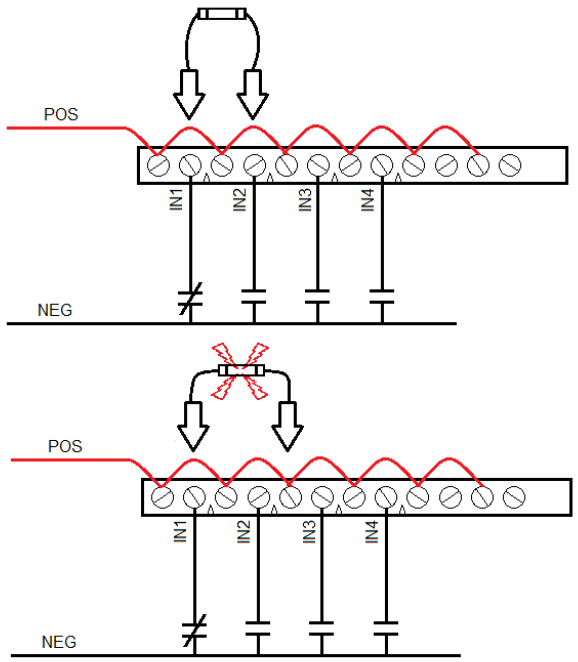

POSITIVE TO NEGATIVE SHORT

FUSE BLOWN.

DAMAGE TO SCREW.

DAMAGE TO JUMPER.

FUSES ONLY LIMIT TIME OF FAULT.

WHY NOT LIMIT CURRENT?

LIMITING FAULT CURRENT

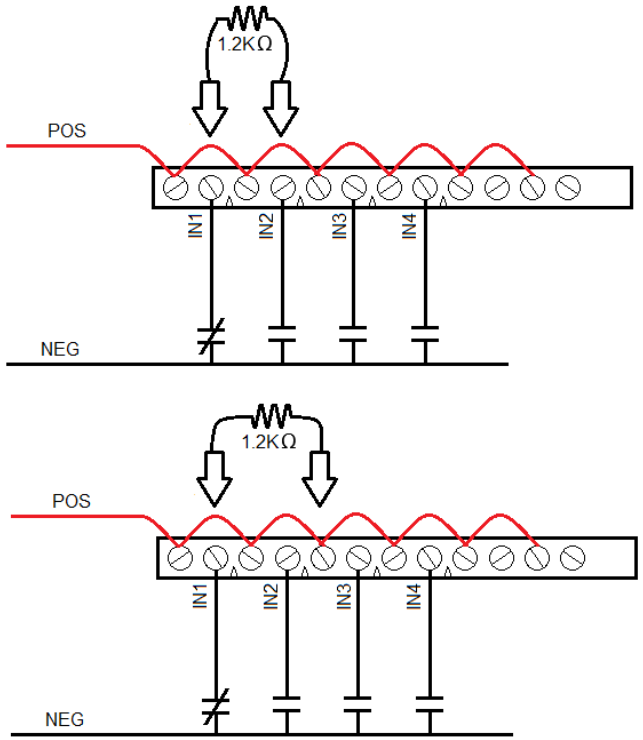

E^2/ R = $130V^2$ / 1200Ω ≈ 14 WATTS

E / R = 130V / 1200Ω ≈ 0.11 AMPS

DIRECT POSITIVE TO NEGATIVE SHORT RESULTS IN A .11 AMP 14 WATT INSTANTANEOUS EVENT

CONDUCTOR IDENTIFICATION

CIRCUIT IDENTIFICATION

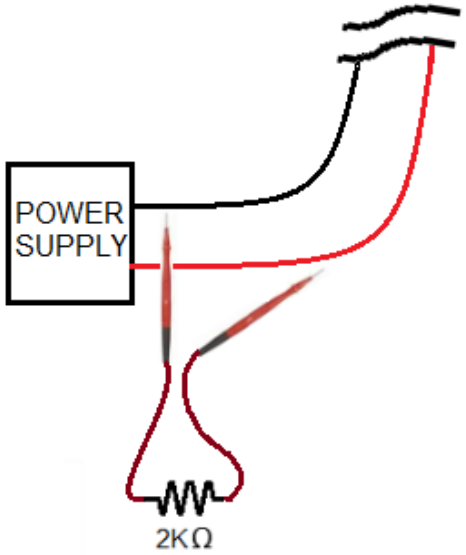

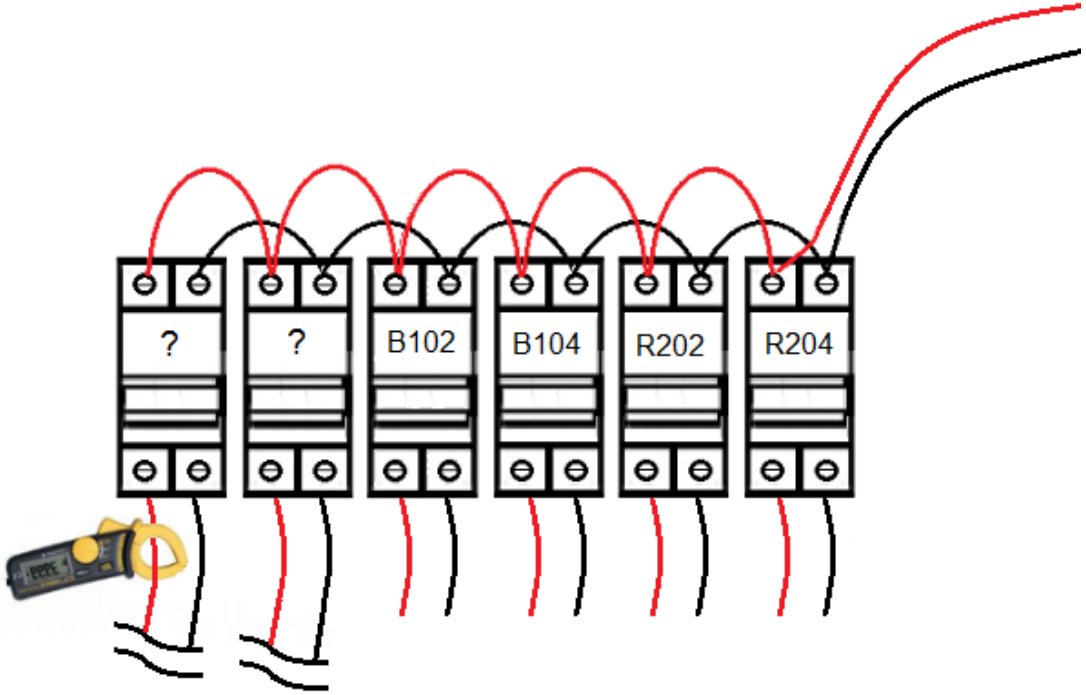

YELLOW-LINE OF A LOCKOUT CIRCUIT

DE-ENERGIZED!

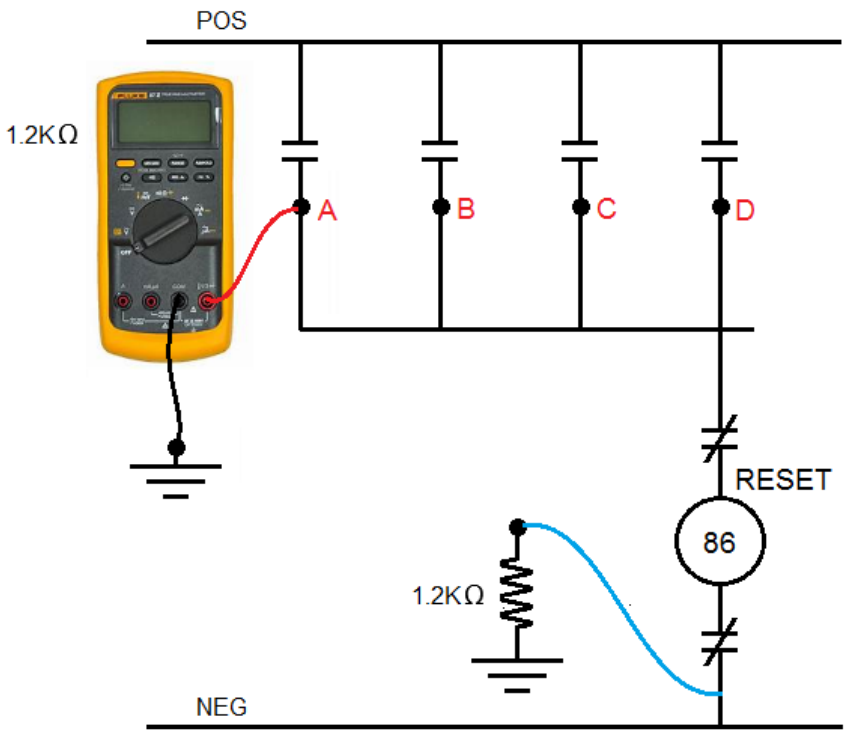

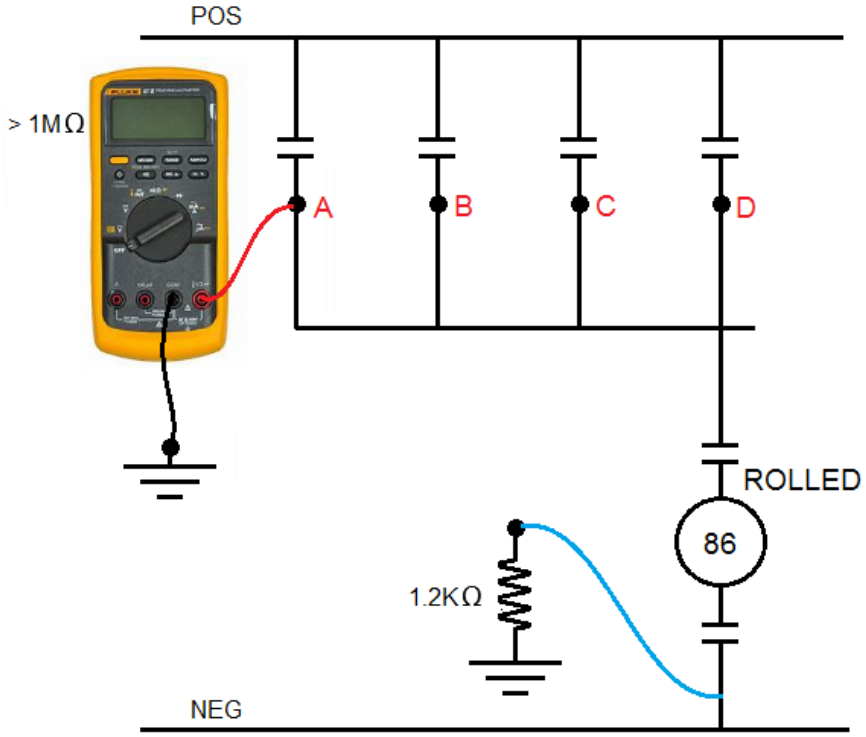

VERIFYING INPUT CIRCUITS

MORE TO FOLLOW ON INPUTS…

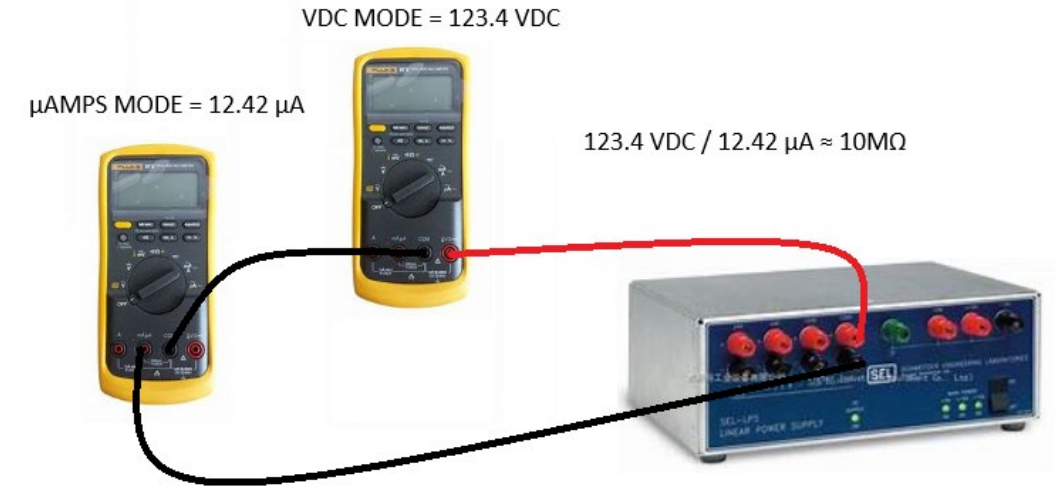

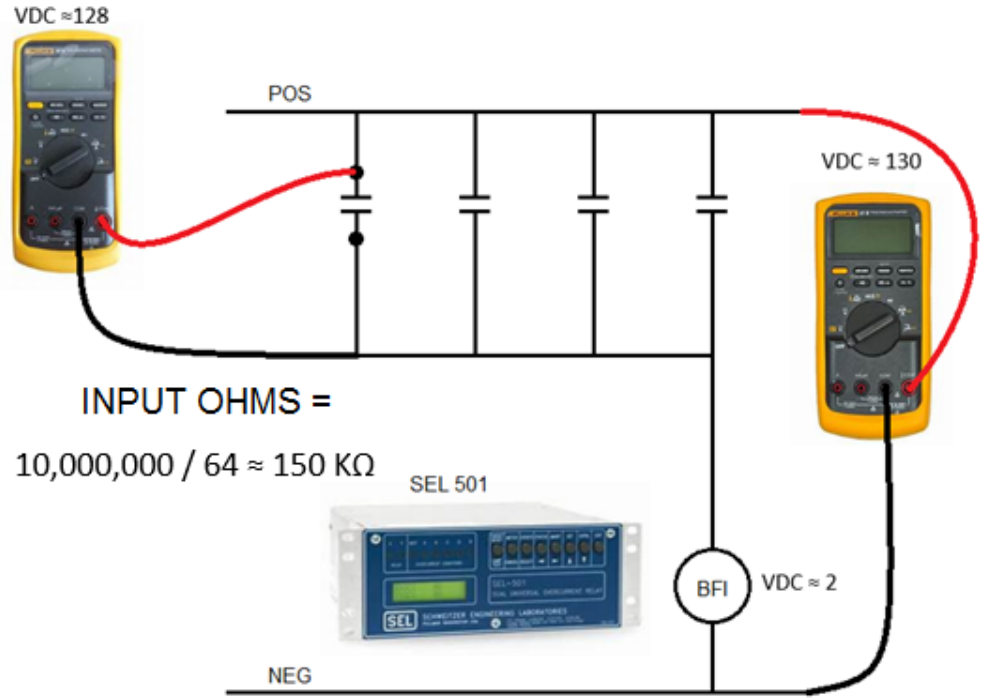

VERIFYING INPUT CIRCUITS (CONTINUED)

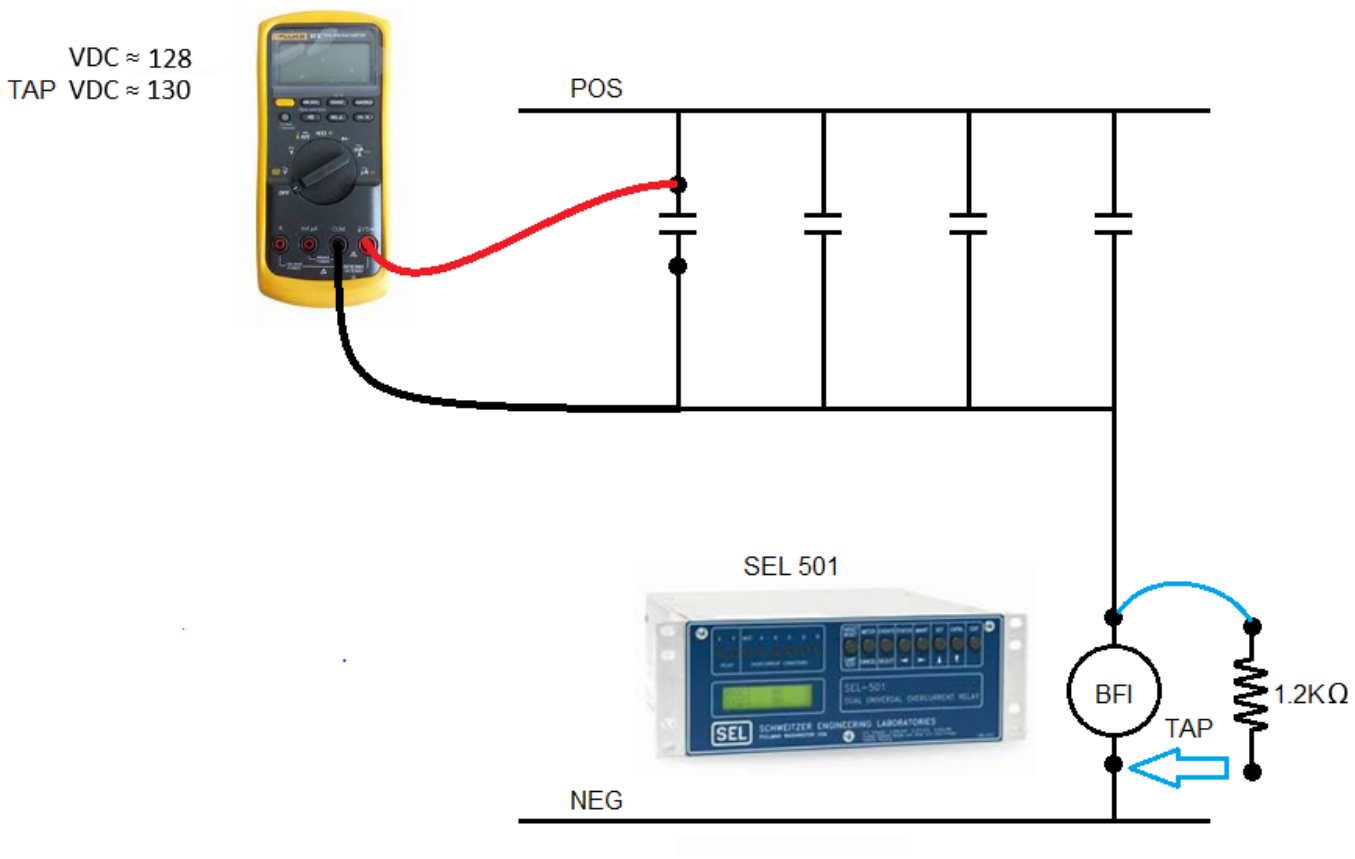

VERIFYING INPUT CIRCUITS (CONTINUED)

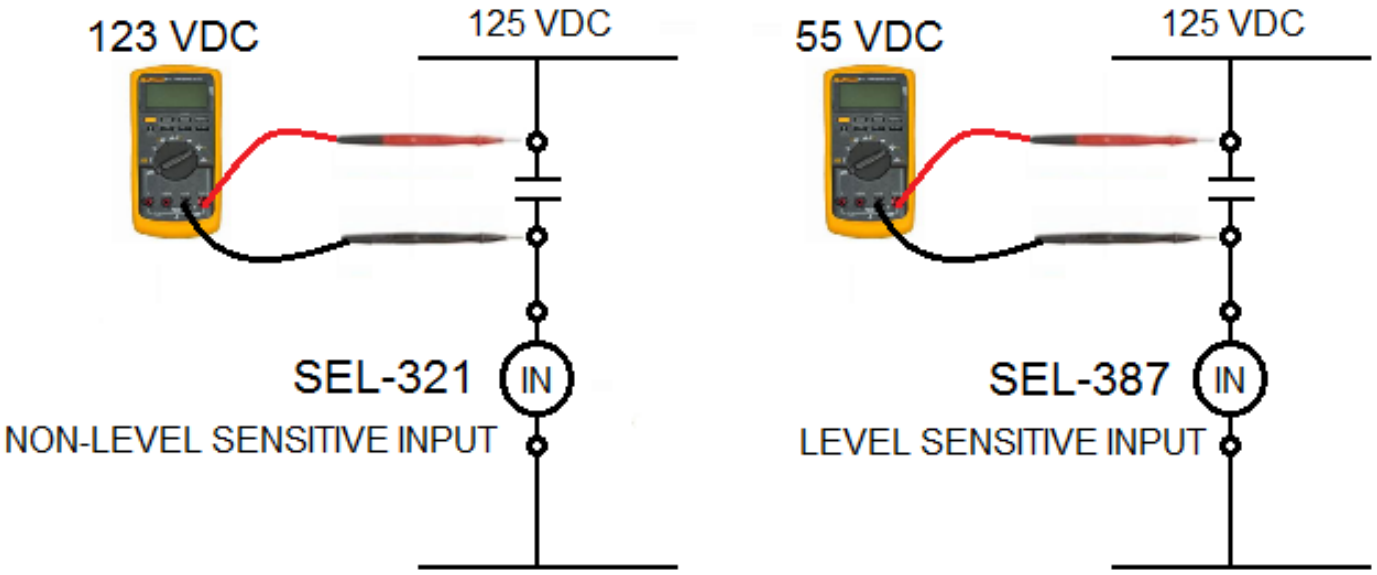

VERIFYING INPUT CIRCUITS (CONTINUED)

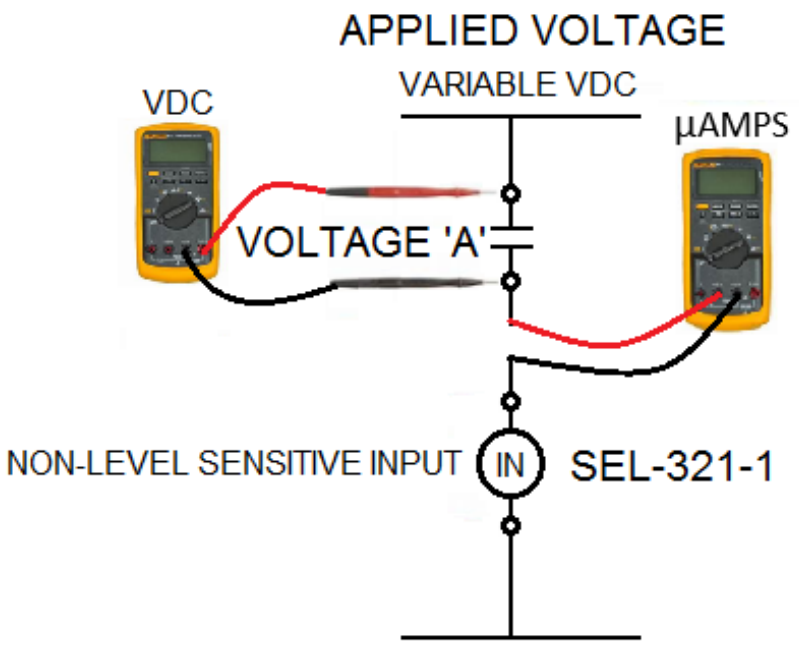

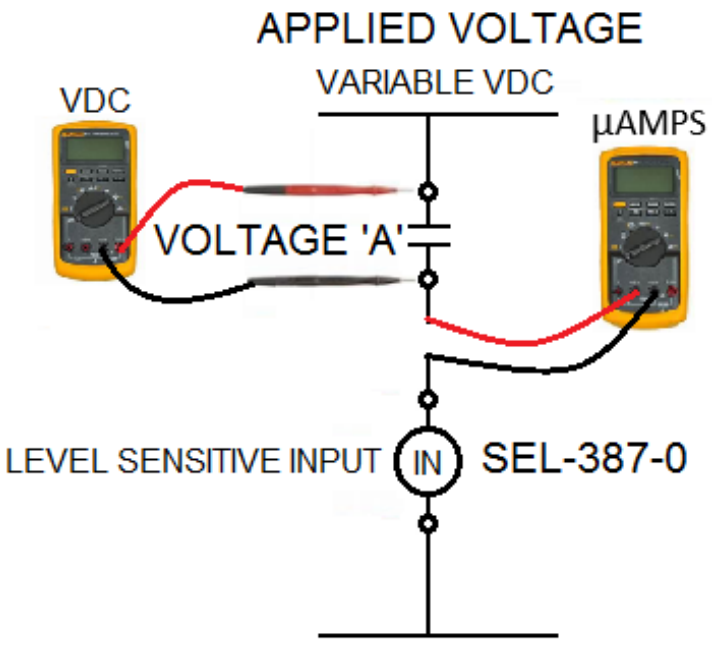

VERIFYING INPUT CIRCUITS (CONTINUED)

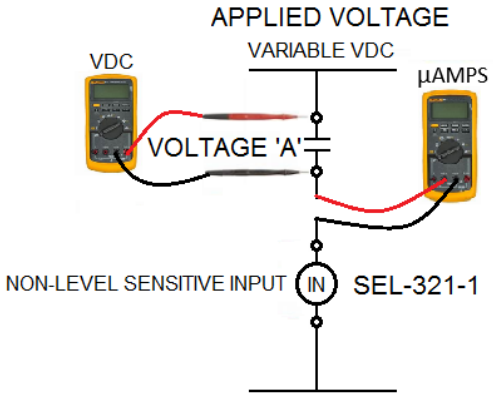

APPLIED VOLTAGE	VOLTAGE 'A'
10V	9.1V
20V	19.0V
30V	29.0V
40V	39.0V
100V	98.6V
130V	128.5V
150V	148.4V
200V	198.2V

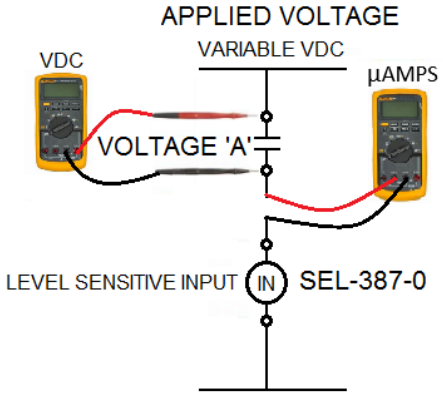

APPLIED VOLTAGE	VOLTAGE 'A'
60V	1.3V
80V	3.2V
100V	23V
120V	42.8V
130V	52.8V
150V	72.7V
200V	122.6V
300V	222.3V

VERIFYING INPUT CIRCUITS (CONTINUED)

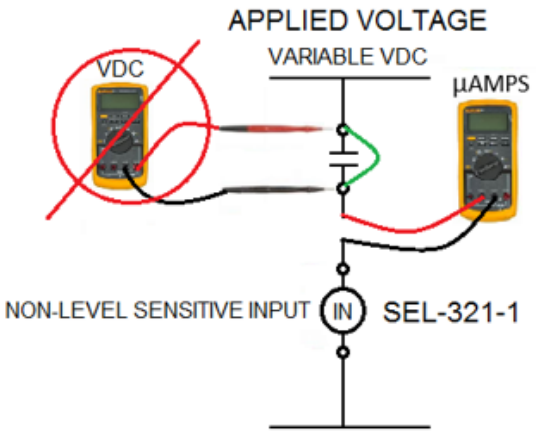

APPLIED VOLTAGE	AMPERAGE µ amps
10 VDC	271
20 VDC	572
30 VDC	874
40 VDC	1180
41 VDC	1206
43 VDC	1267 ASSERTED
44 VDC	1297
125 VDC	3840

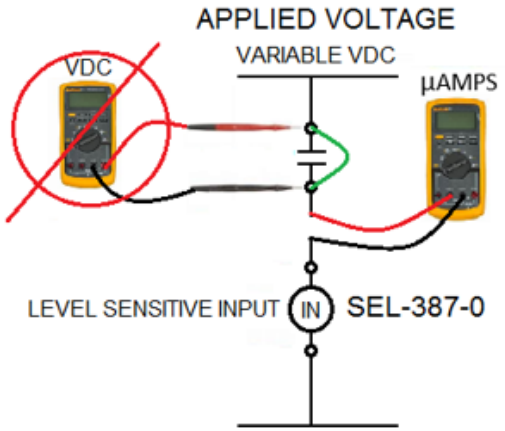

APPLIED VOLTAGE	AMPERAGE µ amps
10 VDC	.11
20 VDC	.13
40 VDC	.16
60 VDC	.2
76 VDC	.35
77 VDC	4.3
78 VDC	74
82 VDC	400
86 VDC	716 ASSERTED
125 VDC	3886

VERIFYING INPUT CIRCUITS (CONTINUED)

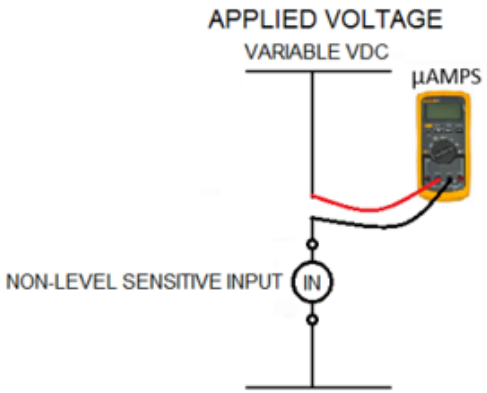

RELAY	APPLIED VOLTAGE	CURRENT THRU INPUT
751A	20VDC	.1µA
	40V	.13µA
	60V	.15µA
	70V	,17µA
	74V	.19µA
	76V	9.2µA
	78V	85µA
	80V	170µA
	84V	340µA
	ASSERTED ≈ 87V @ ≈ 500µA (.5MA)	
551	20VDC	596µA
	40V	1227µA (1.2MA)
	ASSERTS ≈39VDC	

GROUND LOCATION

DISCLAIMER:

THIS METHOD OF GROUND LOCATION COULD, IN THEORY, CAUSE A TRIP.

NORMAL DC VOLTAGES
IN A 125 VDC SUBSTATION

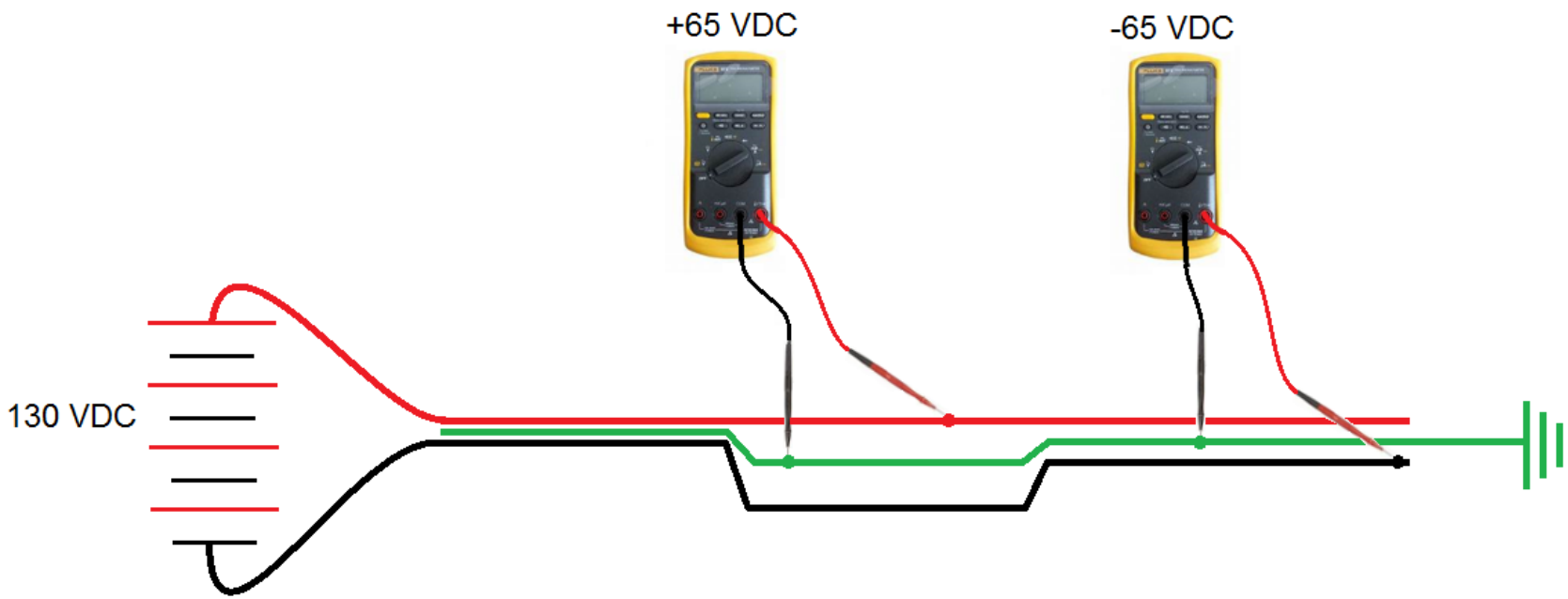

OLD-STYLE GROUND INDICATOR LIGHTS

NORMAL CONDITION

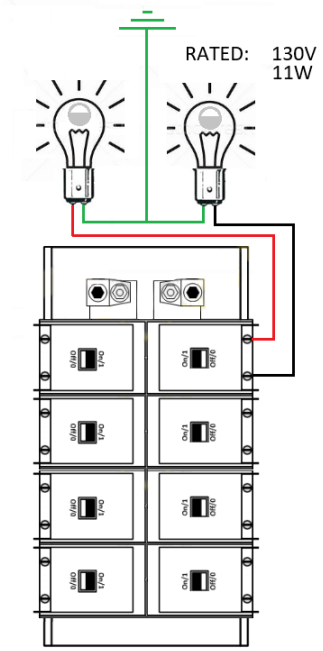

E^2 / R = 11 WATTS
$130V^2$ / R = 11 WATTS
$130V^2$ / 11W = R ≈ 1500Ω

HARD POSITIVE GROUND

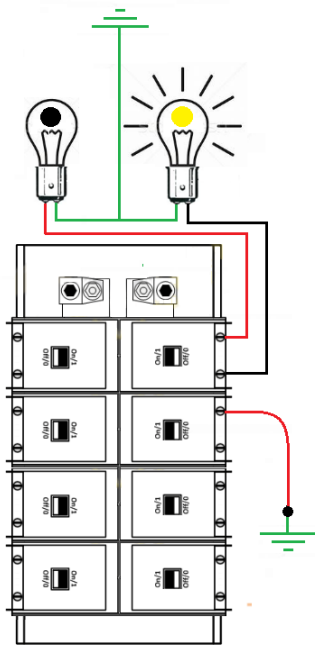

OLD-STYLE (CONTINUED)

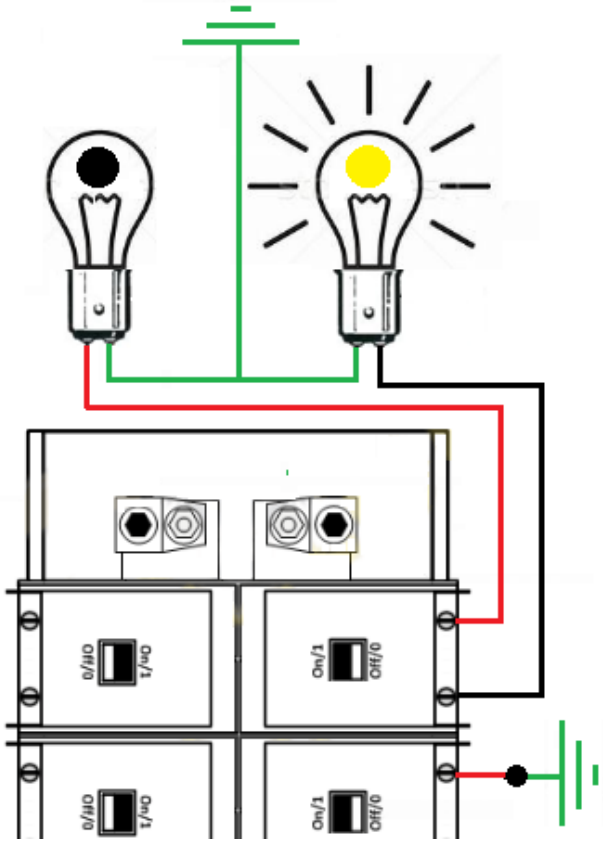

OLD-STYLE (CONTINUED)

RESISTANCE GROUND

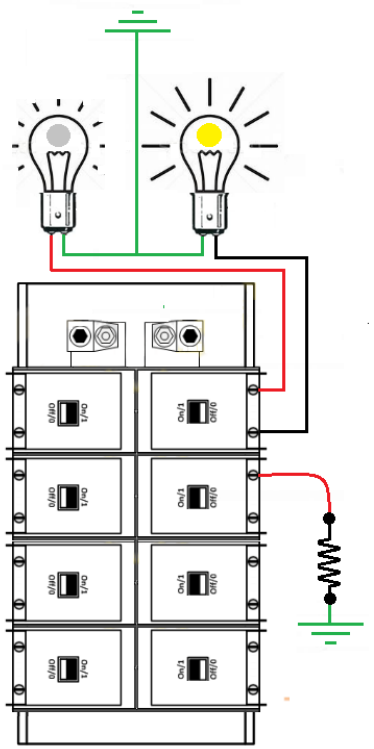

BLOWN BULB

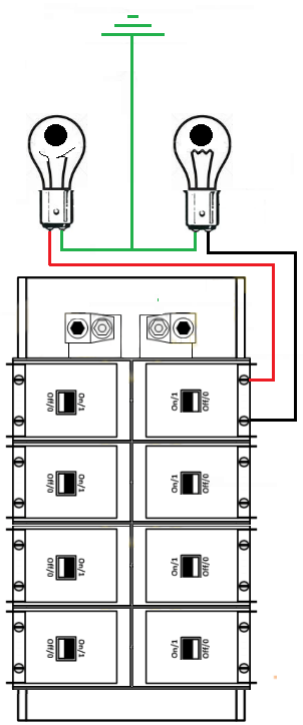

TABOR SUBSTATION

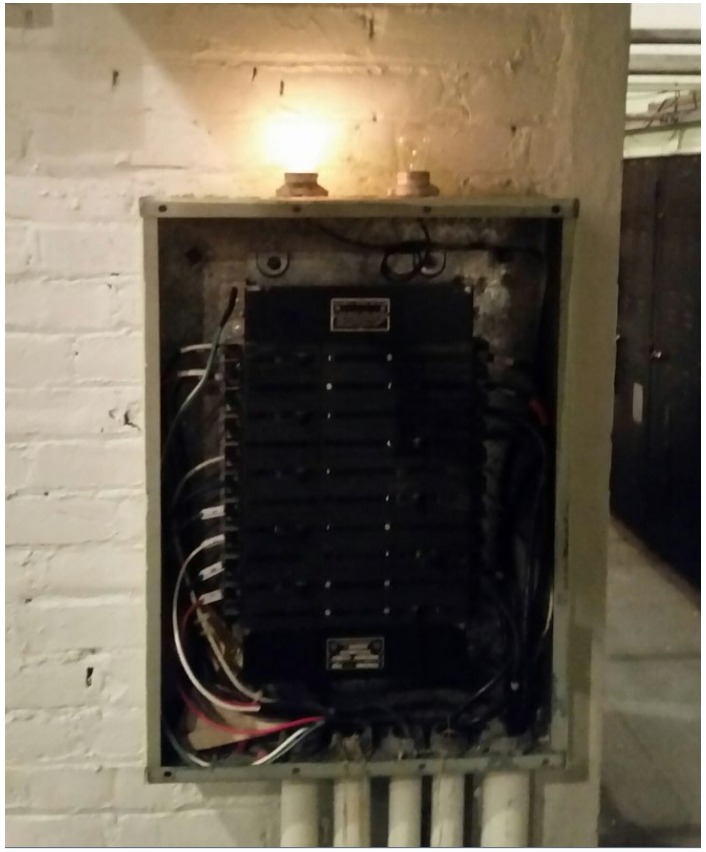

TABOR SUBSTATION (CONTINUED)

TABOR SUBSTATION (CONTINUED)

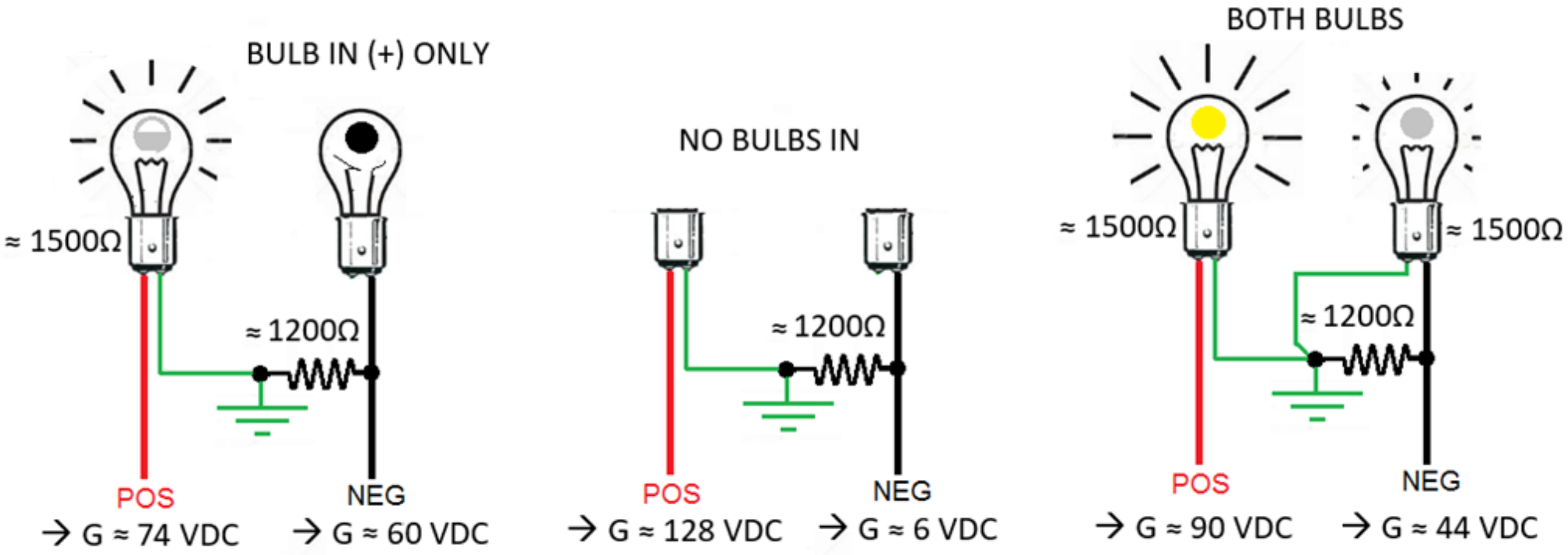

TABOR SUBSTATION (CONTINUED)

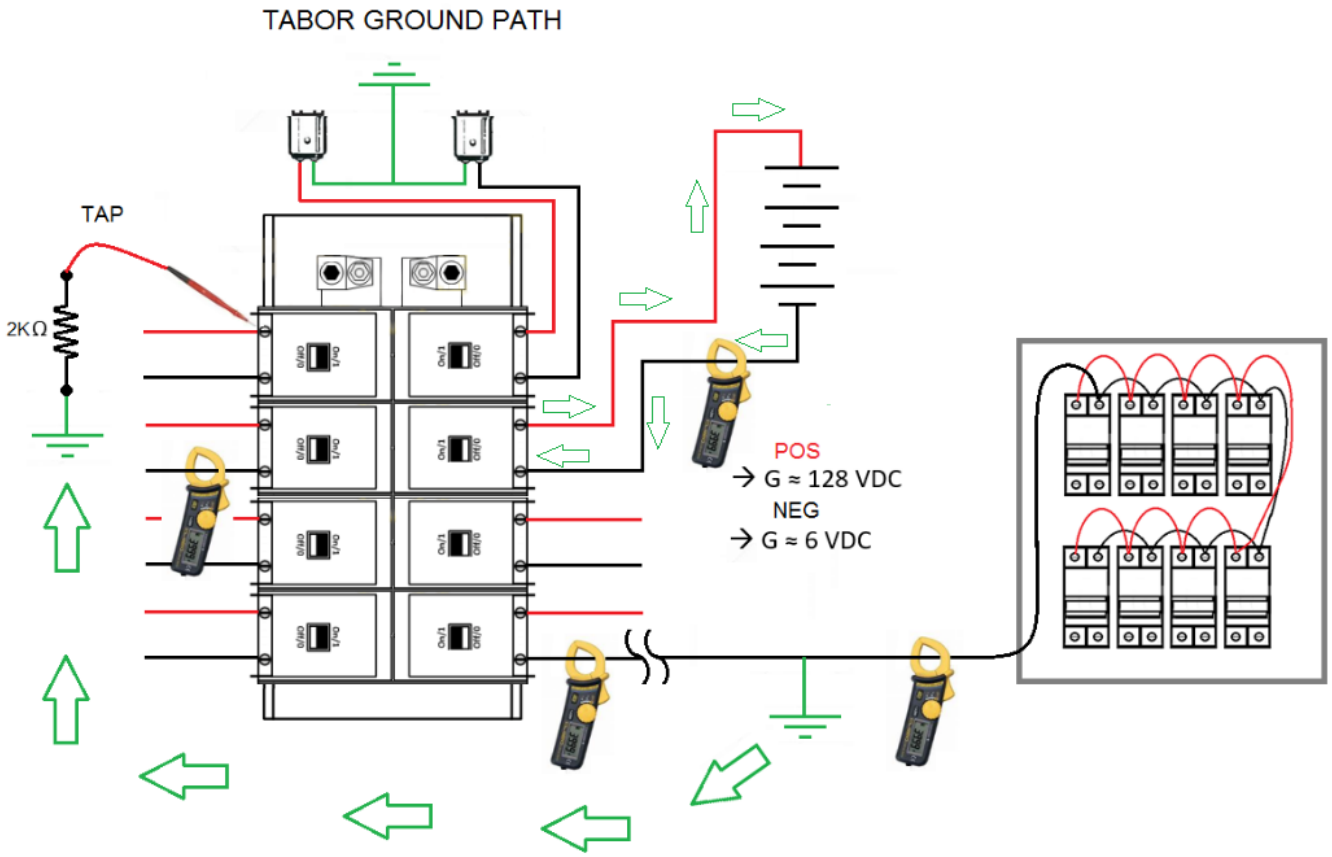

TABOR SUBSTATION (CONTINUED)

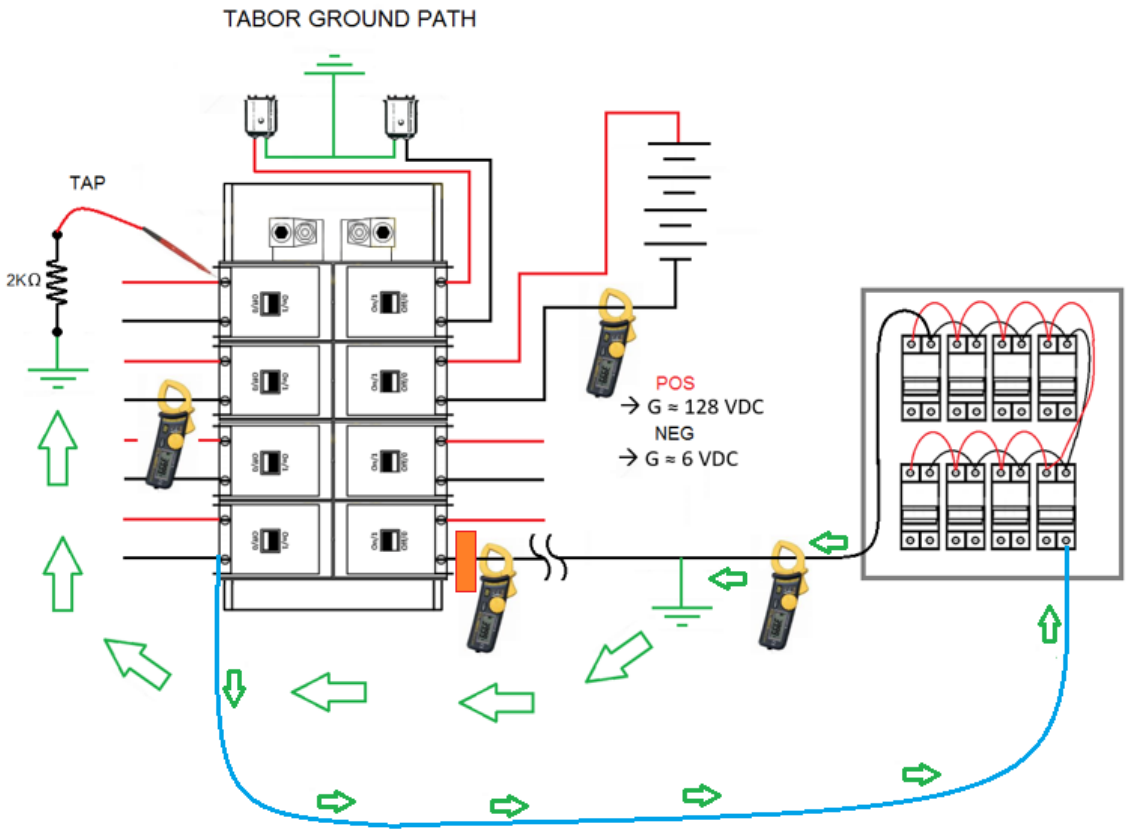

TRIPPING HAZARD

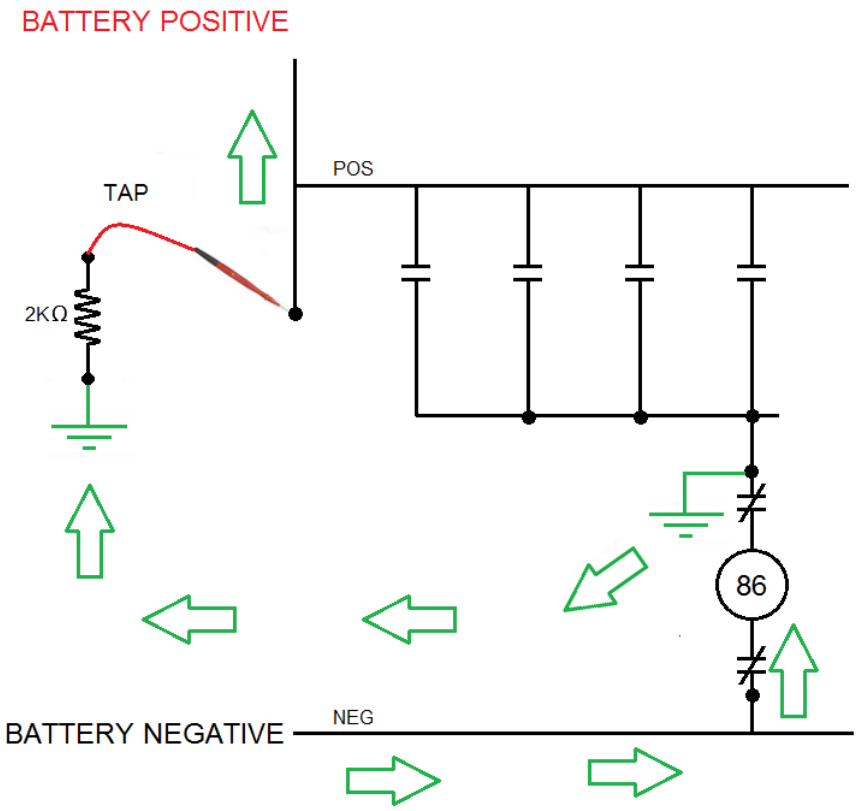

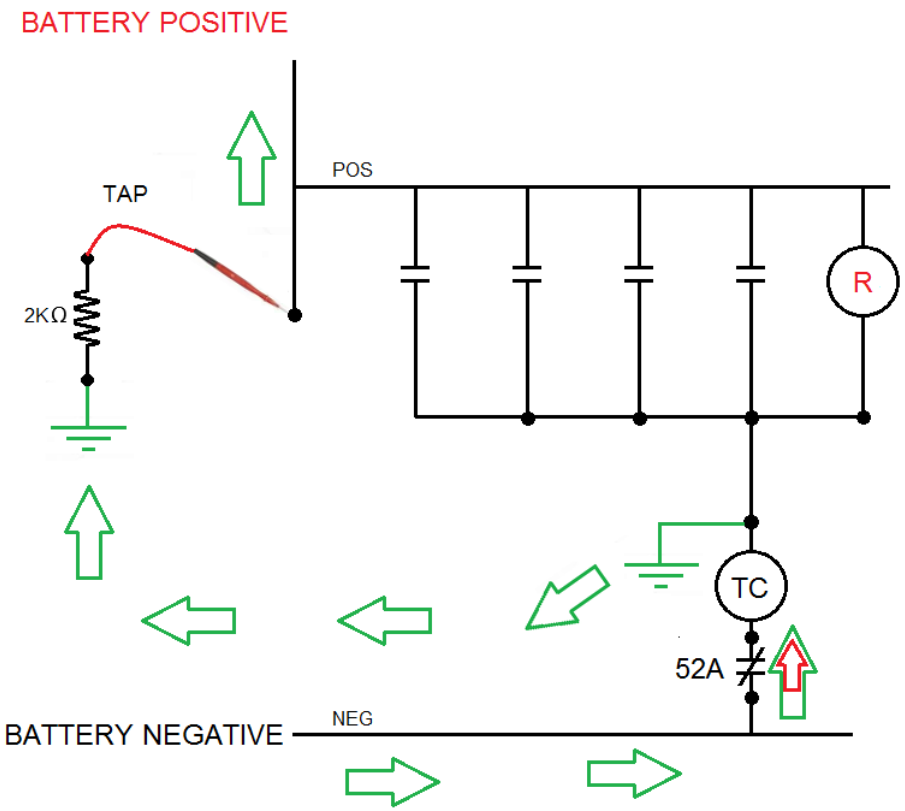

TRIPPING HAZARD

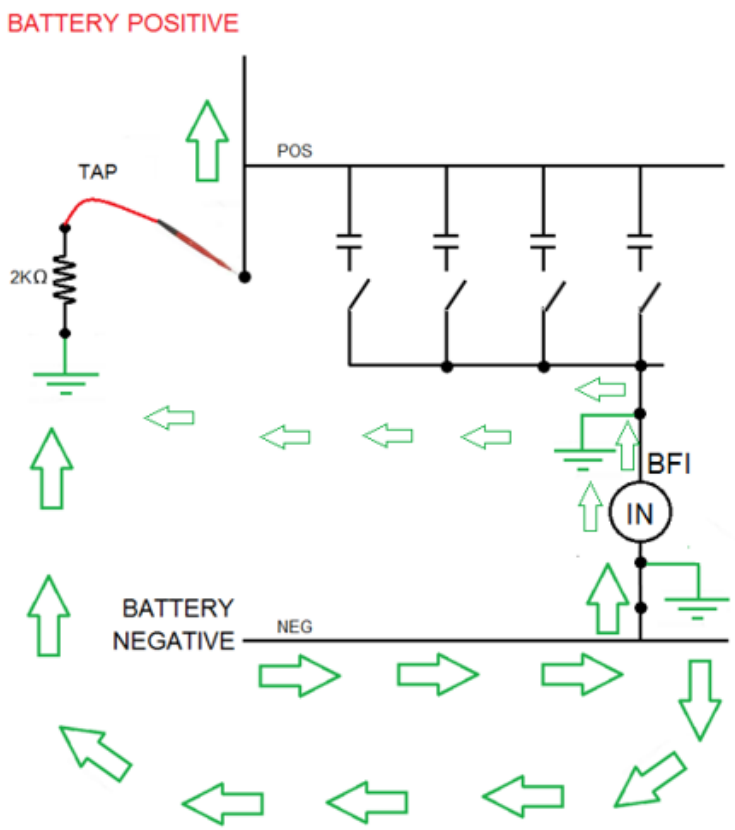

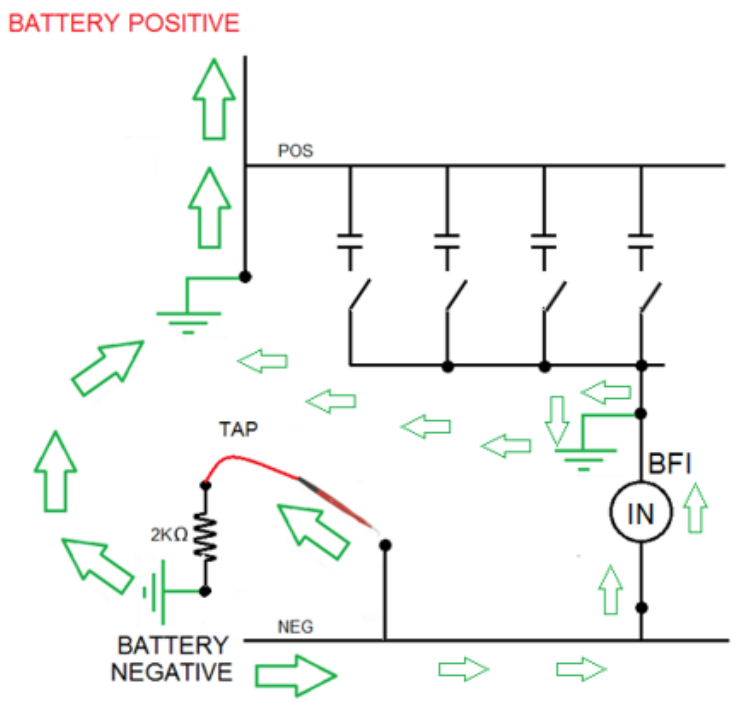

ARNETT DC SCOUT

HJ ARNETT INDUSTRIES, LLC.

HJ Arnett Industries, LLC

Safety | Service | Savings

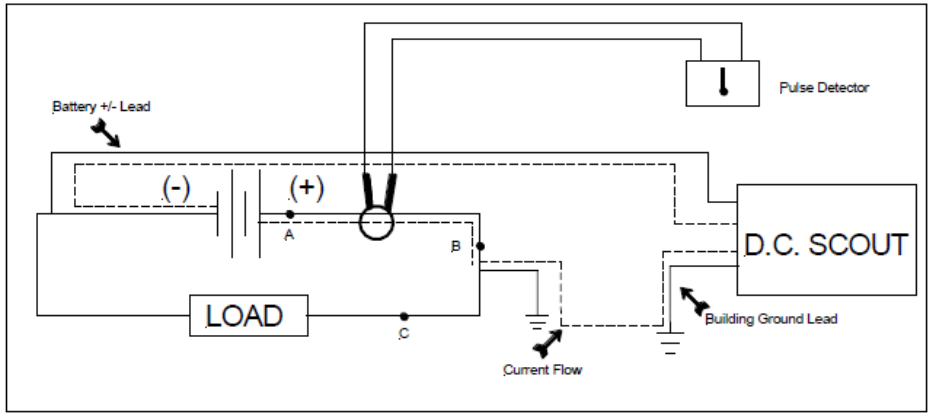

DOBLE 6150 TEST SET & FLUKE 1750 POWER RECORDER

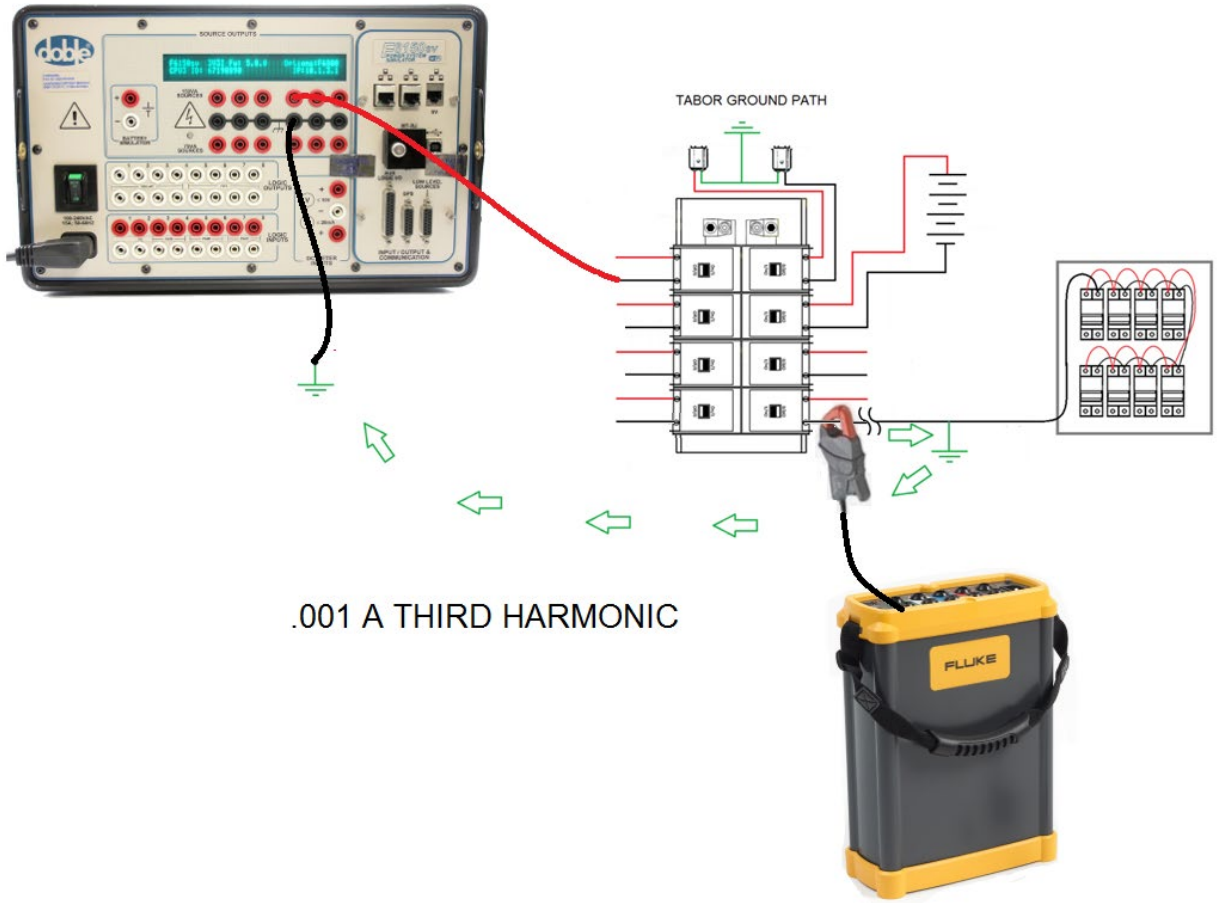

DOBLE 6150 TEST SET & FLUKE 1750 POWER RECORDER

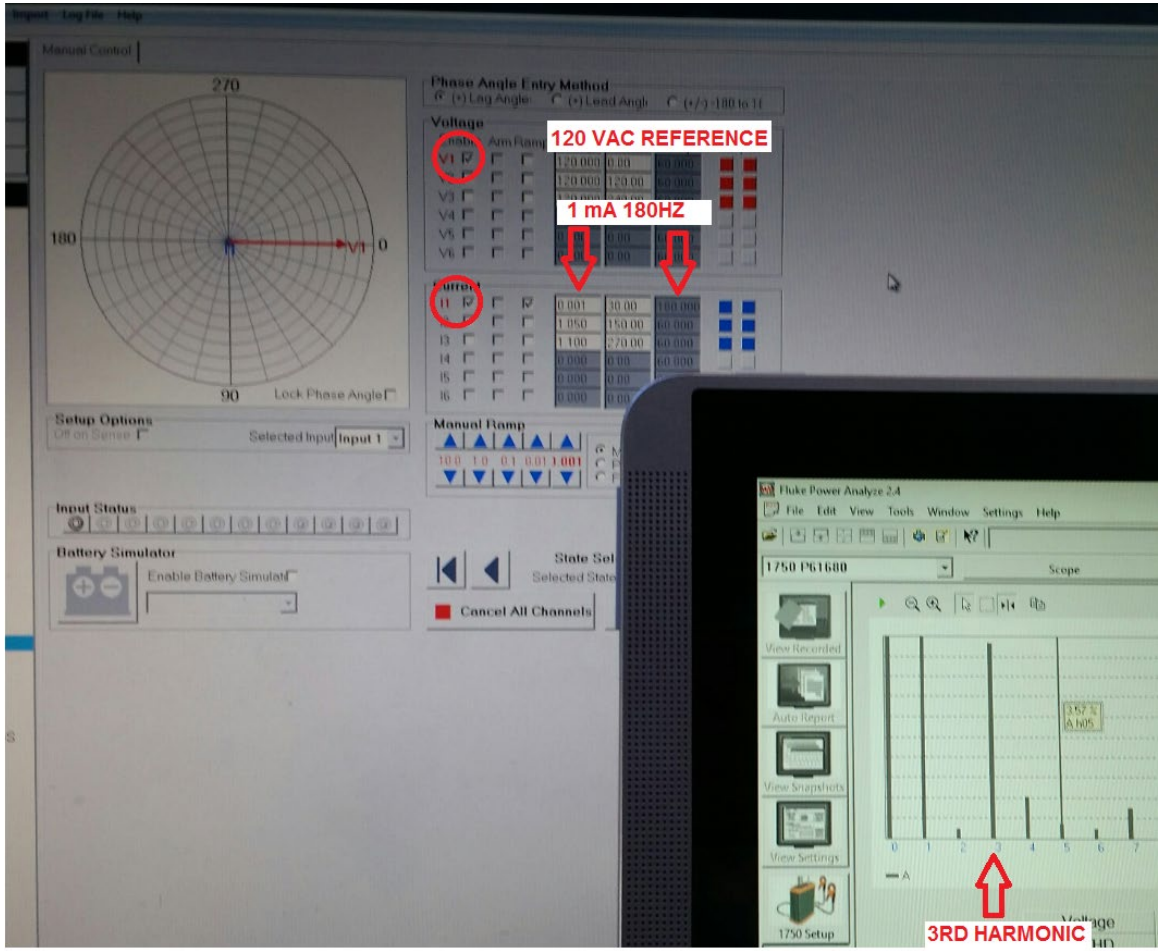

MORE TO COME…

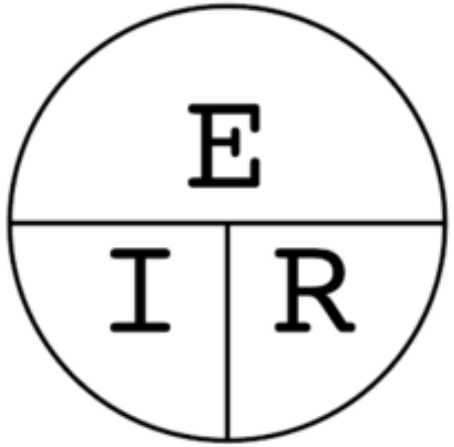

AUTHORIZED UP TO 10 VAC @ 180HZ

10 VOLTS / .002 AMPS = 5000Ω