IRD

SCOPE

This test procedure covers the testing and maintenance of Westinghouse IRD relays. The Westinghouse Protective Relay Division was purchased by ABB, and new relays carry the ABB label. Refer to IL 41-133 for testing support and component level identification.

SAFETY

Current-shorting test switches used for the IRD relay may malfunction and develop high voltage levels. Use caution when using the test switches; make sure they are functioning properly.

INTRODUCTION

IRD relays provide directional ground overcurrent protection of transmission lines and feeder circuits. Directional control of the time overcurrent and instantaneous units is provided either by a zero sequence potential-polarizing unit and/or by a zero sequence current-polarizing unit. Removing IRD relays for testing may leave a transmission line unprotected for phase-to-ground faults. If removing a relay leaves a transmission line unprotected, the relay should be replaced during testing.

Table 1
Various IRD models and their associated time/current characteristics

Model	Time/Current Characteristics
IRD-2	Short Time
IRD-5	Long Time
IRD-6	Definite Time
IRD-7	Moderately Inverse Time
IRD-8	Inverse Time
IRD-9	Very Inverse Time
IRD-11	Extremely Inverse Time

MODIFICATION

The current-polarized directional units of IRD relays are used only when there is a source of zero sequence polarizing current. If the station cannot produce polarizing current, an internal jumper can be installed for added security that connects the stationary contact of the instantaneous unit to the right-hand stationary contact of the current-polarized directional unit. This jumper ensures that the voltage-polarized directional unit alone will provide directional control of the instantaneous unit.

TOOLS, EQUIPMENT, AND MATERIALS

- Two variable ac voltage/current, variable phase-angle sources
- Variable dc voltage/current source and latch timer
- Multimeter
- Variable high ac current source (for spurious torque adjustments only)

INSPECTION

1. Take the cover off the relay, taking care to not shake or jar the relay or other relays around it.

2. Open the relay test switches to disable the trip circuit and remove the voltage and current inputs.

3. Lift the relay out of the case.

4. Visually check the relay for any obvious problems.

5. Clean the relay thoroughly.

6. Burnish the surfaces of all contacts, making sure to remove any tarnish.

7. Check that all relay connections are tight.
   NOTE: The current input hardware on Westinghouse relays is frequently loose and requires special attention.

8. Check that there is vertical free play in both polarizing unit contact assemblies and the instantaneous contact assembly. The upper pin bearing should be screwed down until there is approximately 0.025 inch between it and the top of the shaft bearing. One complete turn back off from a touching of the upper pin bearing and shaft bearing should be sufficient.

9. Check that the contact gap on both polarizing units and the instantaneous unit is 0.020 inches. Adjust the gap setting if necessary. (Use a 0.020-inch feeler gage.)

10. After setting the contact gap, check that the contacts move freely.

TESTING THE TIME OVERCURRENT UNIT

Prerequisites

1. Connect the variable ac current source to Terminals 8 and 9.

2. Apply current higher than the tap setting and verify that the time overcurrent unit does not pick up.

3. Place a jumper across the shading coil terminals on the back of the relay, bottom left, to short out the CS-1 contact.

Testing Minimum Pickup

1. Monitor contact continuity at Terminals 1 and 10.

2. Apply sufficient current above tap value to close the contacts. Watch the disk movement throughout the pickup to ensure that there is a smooth unhindered travel of the disk.

3. Decrease the current until the contacts flicker.
   NOTE: This is the minimum pickup current; it should be equal to +/– 5% of the tap setting. The dropout current should be at least 85% of the tap setting. If the pickup current does not meet specifications, adjust the tension on the spiral spring.
   NOTE: Tightening the spring (turning it counterclockwise [CCW] from the top) increases pickup current. Loosening the spring (turning it clockwise [CW] from the top) decreases pickup current.

4. Remove the current and allow the disc to reset to the back stop. Watch the disk movement throughout the reset to ensure that there is a smooth unhindered travel of the disk.

5. Check the time that it takes the disk to reset itself from pickup position to the backstop with the test current removed.
   NOTE: The reset time average is between 5 and 6 seconds per time dial position.

6. Apply minimum pickup current and verify that the movable contact just starts to move away from the back stop.
   NOTE: The pickup current should be equal to the tap setting +/– 5%. The dropout current should be at least 85% of the tap setting.

Testing the Time-Current Characteristic

1. Check the published time curve and relay settings to determine the expected response time at a minimum of two points on the timing curve.

2. Configure a timer start latch so the timer will start when the current is initiated.

3. Connect the current inputs to Terminals 8 and 9.

4. Monitor contact continuity at Terminals 1 and 10 for the timer stop latch.

5. Initiate current for the first timing test and observe the response time.
   If the measured response time varies by more than 5% (+/−) from the expected response time, adjust the drag magnet slug and time dial. Be sure the drag magnet slug is not touching the relay disk.
   NOTE: The drag magnet slug is used for coarse adjustment. Turning the slug in increases the response time. Turning the slug out decreases response time.

   The time dial is used for fine adjustment. Increasing the time setting on the time dial increases response time; decreasing the time setting decreases response time.

   CAUTION: The current should be removed from the relay as soon as the timer stops. Leaving the current on the relay for an extended period of time may damage the time overcurrent unit.

6. Repeat Step 4 and 5 for the second timing test.

7. Remove the jumper from the shading coil.

TESTING THE INSTANTANEOUS UNIT

1. Connect the variable ac current source to Terminal 9 and the tap block on the instantaneous unit. Monitor contact continuity at Terminals 2 and 10.

2. Block the contact on one directional unit to the pickup position (left).

3. Check the instantaneous tap block setting to determine the appropriate pickup current.

4. Pulse initiate current below the expected pickup current. Continue initiating current at successively higher levels until the contact on the instantaneous unit just picks up.

   CAUTION: The current should be removed from the relay as soon as the instantaneous unit picks up. Leaving the current on the relay for an extended period of time may cause damage.

   If the measured pickup current varies more than 5% (+ /−) from the expected pickup current, adjust the spiral spring on the instantaneous unit. Loosening the spiral spring will decrease pickup, tightening the spiral spring will increase pickup.

5. Remove the block from the directional unit and verify that the instantaneous unit does not pick up when both directional units are open.

TESTING THE CS-1 PICKUP ASSEMBLY

1. Check that the CS-1 dropping resistor is set to the appropriate dc trip voltage.

2. Connect the multimeter to the terminals on the shading coil (left rear of the relay) and measure the resistance across the shading coil.
   NOTE: The resistance should be approximately 300 ohms. A resistance less than this may indicate a mechanical problem in the shading coil and has been known to create misoperations.

3. Apply trip circuit voltage to Terminal 3 (– terminal) and to Terminal 10 (+ terminal).

4. Manually pick up the upper directional unit and verify that the CS-1 unit picks up and the resistance goes to zero.

5. Manually pick up the lower directional unit and verify that the CS-1 unit picks up and the resistance goes to zero.

TESTING THE DIRECTIONAL UNITS

Testing the Upper Directional Unit (Current Polarizing)

1. Connect one variable ac current source (operating current – Io) to Terminals 8 and 9, with the polarity lead going to Terminal 9.

2. Connect the other variable ac current source (polarizing current – Ip) to Terminals 6 and 7, with the polarity lead going to Terminal 6.

3. Block the instantaneous unit contact closed.

4. Block the potential polarizing unit (lower unit) contact open.

5. Monitor contact continuity at Terminals 2 and 10.

6. Check Table 2 to determine the appropriate pickup levels for the directional unit.

7. Initiate the test currents in phase and check that the directional unit pickup current meets the specifications listed in Table 2.

   If the pickup current does not meet the specifications in Table 2, adjust the spiral spring on the upper directional unit. Tightening the spiral spring increases pickup current, loosening the spiral spring decreases pickup current.

   If adjusting the spiral spring does not bring the directional unit within specifications, go to the Spurious Torque Adjustments section.

8. Increase Io and Ip to 2 A. Vary the phase angle of Io clockwise (CW) until the current polarizing unit drops out, then vary the phase angle of Io counter-clockwise(CCW) until the current polarizing unit drops out.

9. Calculate the average of the phase angles at the two dropout points.
   NOTE: The resulting figure is the maximum torque angle. The maximum torque angle should indicate Io leading Ip by approximately 40 deg.

Testing the Lower Directional Unit (Potential Polarizing)

1. Connect a variable ac current source (operating current – Io) to Terminals 8 and 9, with the polarity lead going to Terminal 9.

2. Connect a variable ac voltage source (polarizing voltage – Vp) to Terminals 4 and 5, with the polarity lead going to Terminal 4.

3. Block the instantaneous unit contact closed.

4. Block the current polarizing unit (upper unit) contact open.

5. Monitor contact continuity at Terminals 2 and 10.

6. Check Table 2 to determine the appropriate pickup levels for the directional unit.

7. Initiate test voltage and test current. Check that the directional unit pickup level meets the specifications listed in Table 2.

   If the pickup level does not meet the specifications in Table 2, adjust the spiral spring on the lower directional unit. Tightening the spiral spring increases pickup current, loosening the spiral spring decreases pickup current.

   If adjusting the spiral spring does not bring the directional unit within specifications, go to the Spurious Torque Adjustments section.

8. Increase Io to 4 A and Vp to 2 V. Vary the phase angle of Io CW until the current polarizing unit drops out. Then vary the phase angle of Io CCW until the current polarizing unit drops out.

9. Calculate the average of the phase angles at the two dropout points.

   NOTE: The resulting figure is the maximum torque angle and should indicate Io lagging Vp by approximately 60 deg.

   NOTE: A phase angle that is considerably out of adjustment may indicate a capacitor failure.
   If problems are encountered in testing the directional units, go to the Spurious Torque adjustments section.

Table 2

Directional Unit Sensitivity

Relay Type	Ampere Rating of Time-Overcurrent Unit	Values for Minimum Pickup*		Phase Angle Relationship
		Volts	Amperes	
IRP	0.5 – 2.5	1	2.0	I lagging V by 60° †
IRD (Voltage Unit)	2 – 6	1	4.0	I in phase with V
		1	4.0	I lagging V by 60° †
	4–12	1	8.0	I in phase with V
IRP	0.5 – 2.5	–	0.5	I_o leading I_p by 40° †
IRD (Current Δ Unit)	2 – 6	–	0.57	In phase
		–	1.0	I_o leading I_p by 40° †
	4–12	–	1.3	In phase

* The energization quantities are input quantities at the relay terminals.

† Maximum torque angle

Δ When normal system conditions limit the current to less than twice pickup, performance may be improved by selecting a higher current CT tap to energize the polarizing circuit.

TESTING FOR SPURIOUS TORQUE

1. Jumper Terminals 4 and 5 to short the potential polarizing circuit. Check that the current polarizing circuit Terminals, 6 and 7, are open.

2. Use the spiral springs to adjust the tension on both polarizing unit contact assemblies until the moving contacts just float.

3. Place a jumper across the shading coil terminals on the back of the relay, bottom left, to short out the CS-1 contact for shading coil protection.

4. Connect a high ac current source to Terminal 9 and to the tap block on the TOC unit.

5. Momentarily initiate 5 amps in the current circuit and compensate for spurious torque in both directional units as specified in Table 3. A slight amount of torque in the open direction is preferred

6. Momentarily initiate current, in convenient steps, up to 30 amps in the current circuit and verify that the spurious torque does not close either polarizing unit contacts.

7. If the potential polarizing unit (lower unit) has a slotted core adjustment, complete steps 8 through 10, if not, skip to step 11.

8. Check that the residual current circuit Terminals, 8 and 9, are open.

9. Apply 120 Vac to Terminals 4 and 5 and adjust the core until a slight opening torque is observed.

10. Remove the voltage from Terminals 4 and 5 and repeat steps 5 through 10 until both adjustments result in correct operation.

11. Readjust the spring tension and contact gap on both polarizing units.

Table 3

Directional Unit Calibration

RELAY RATING	CURRENT AMPERES	BOTH PLUGS IN CONDITION	ADJUSTMENT
0.5-2.5 Amps 2-6 Amps	5 - 80	Spurious Torque in contact closing direction (left front view).	Right (front-view) plug screwed out until Spurious Torque is reversed.
4-12 Amps	5 - 80		
0.5-2.5 Amps 2-6 Amps	5 - 80	Spurious Torque in contact opening direction (right front view, contacts remain open).	Left (front view) plug screwed out until Spurious Torque is in contact closing direction. Then the plug is screwed in until Spurious Torque is reversed.
4-12 Amps	5 - 80		

† *Short circuit the voltage polarizing at the relay terminals before making the above adjustment.*

TESTING THE TARGET AND SEAL IN

1. Pick up both target units manually. Ensure that the contacts have a 1/32-inch wipe and that the targets drop freely when the contacts pick up.

   If necessary, adjust the target unit so the target drops freely when the unit picks up.

Testing the Time Overcurrent Target

1. Connect the variable dc current source to Terminals 1 and 10.

2. Manually rotate the relay disk until the contacts just close.

3. Raise the dc current until the time target unit picks up. Verify that the target drops smoothly.

   NOTE: The pickup current should meet the specifications listed in Table 4.

4. Release the relay disk and verify that the target unit remains sealed in.

5. Lower the dc current until the target unit drops out.

   NOTE: The dropout current should meet the specifications listed in Table 4.

Testing the Instantaneous Target

1. Connect the variable dc current source to Terminals 2 and 10.

2. Block the contact on one directional unit to the pickup position (left).

3. Manually close the contact on the instantaneous unit.

4. Raise the dc current until the instantaneous target unit picks up. Verify that the target drops smoothly.

   NOTE: The pickup current should meet the specifications listed in Table 4.

5. Release the contact on the instantaneous unit and verify that the target unit remains sealed in.

6. Lower the dc current until the target unit drops out.

   NOTE: The dropout current should meet the specifications listed in Table 4.

Table 4

Target Unit Specifications

Tap Setting	Pickup Current	Dropout Current
0.2	0.15 to 0.195 A	0.05 A or more
2.0	1.50 to 1.95 A	0.55 A or more

Figure 1
IRD Internal Schematic

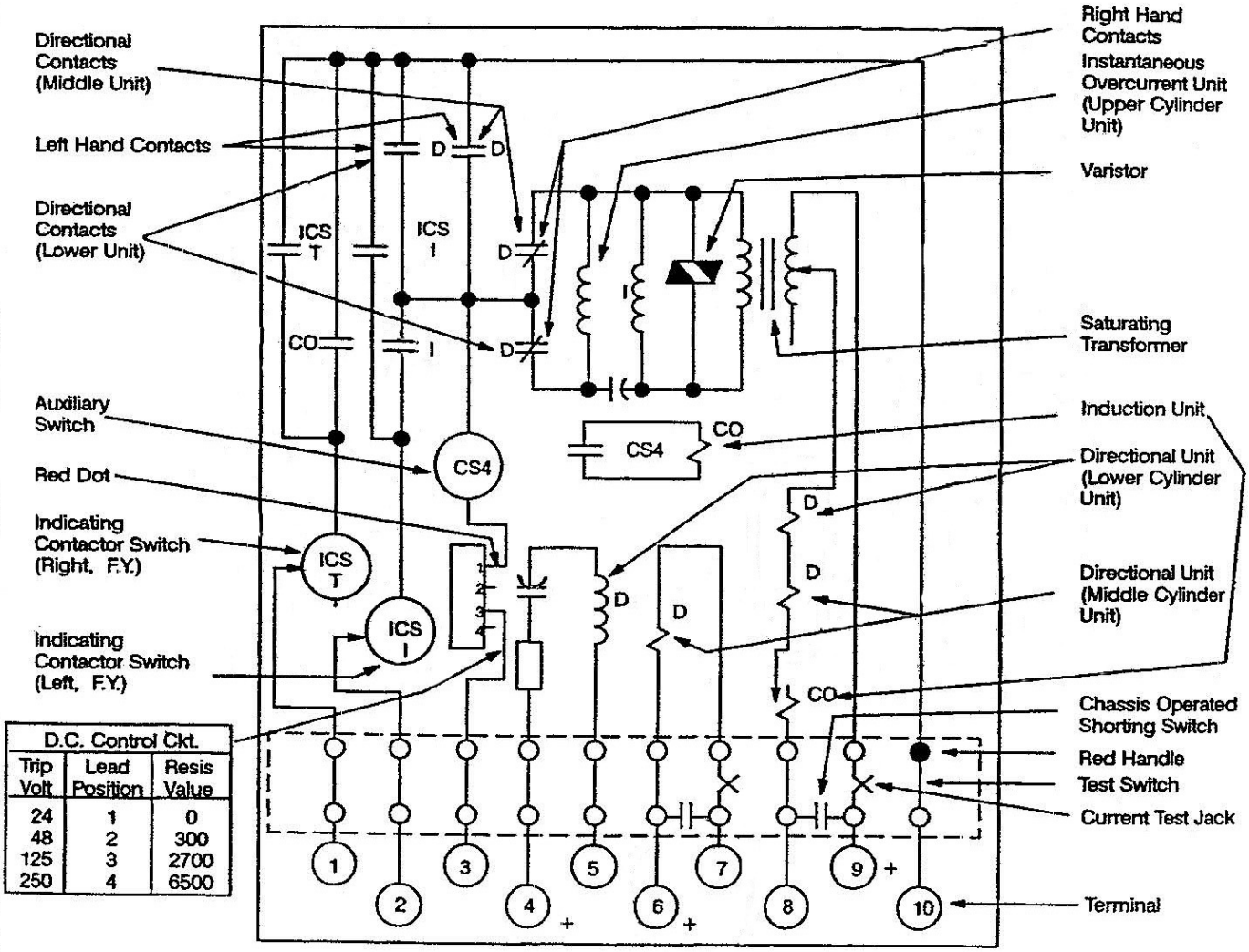

D.C. Control Ckt.		
Trip Volt	Lead Position	Resis Value
24	1	0
48	2	300
125	3	2700
250	4	6500

With relative instantaneous polarity as shown, the directional unit contact closed to the left.