Distributed Generation and Its Impact on Power Grids and Microgrids Protection

Galina Antonova
ABB Inc., Canada

Massimo Nardi
ABB Inc., USA

Alan Scott
Dixie Escalante Power, USA

Michael Pesin
Seattle City Light, USA

ABSTRACT - The National Institute of Standards and Technology, NIST, is assigned by the US Department of Energy, DoE, to drive Smart Grid developments and harmonization efforts in the power industry. Distributed Generation has been identified as one of the important areas for the Smart Grid developments.

Multiple generation sources, bi-directional power flow, power flow time co-ordination and management bring significant benefits and challenges for the existing and emerging power grids and microgrids. In particular, the effect of distributed generation on protection concepts and approaches needs to be understood, and accounted for.

This paper describes distributed generation concepts, applications and scenarios. Benefits and challenges are discussed and analyzed on a number of real life examples. Special considerations are provided on ensuring security and dependability, as well as on protection parameterization and coordination.

I. INTRODUCTION

The desire for green less-polluting electric generation to meet environmental targets and technological advancements in alternative energy sources are some of the reasons for increased grows of distributed generation (DG) or dispersed-resource (DR) generation, i.e. small scale generators connecting at the distribution level [1]. Significant amount of green power is being installed at the distribution level in North America and worldwide [2-4]. Solar power capacity in the United States has tripled in the last decade, and is expected to increase more [5] to meet renewable energy mandates [6]. Utilities around the world are engaged in DG projects of smaller and larger scale [1, 7, 8].

Environmental reasons need to be combined with economical benefits. For example, generation on a small scale may not be economically viable due to low consumer rates. In some cases, local generation may only be needed for those who demand 100 percent reliability. Although economical rational is a key driving factor, it is not discussed in this paper. The paper focuses on technical challenges and necessary adjustments to the existing power systems that DG brings.

IEEE Std 1547 Standard for Interconnecting Distributed Resources with Electric Power Systems defines technical requirements for integrating distributed sources [9]. IEEE 1547 Standard series also contain application guides, recommended practices and test procedures. In addition, utilities define their own requirements for interconnecting a generating source to its distribution system [1] as well as own implementation practices [6].

The effect of DG addition on protection functions deserve special attention and are the main focus of this paper. Most distribution networks in the US have been designed to operate on a unidirectional power flow feed or most commonly known as a radial feed. Due to this, the protection methods have become rather standard and straightforward, and are based on common phase and neutral/ground non-directional overcurrent protection. However, as distributed generation becomes more and more popular among all classes of customers (industrial, commercial and residential), these basic protection elements may not properly ensure the security and proper clearance of anomalies in the distributed networks. As the dispersed generation increases, distribution feeders look more like transmission networks in which the generation and the load nodes are mixed leading to a more complex protection system. For transmission networks, power system stability, control of active power, frequency, and voltage are the main requirements. For distribution networks with DG, rapid disconnection of local generations is normally required by the North American utilities in the event of a fault in the network.

It is interesting to note that North American and European requirements related to DG differ significantly. While North American utilities are required to quickly disconnect local generation, European utilities support islanded operation. Voltage levels where DG is added play a role as well in differing between the North America and Europe methods. Low voltage (LV) systems should be considered in Europe and Medium Voltage (MV) systems in North America.

This paper describes technical issues related to addition of DG. In particular, it focuses on DG impacts on system protection. Section II and Section III contain examples of DG uses cases with detailed description of possible scenarios, technical challenges and solutions. Section IV raises specific discussion points related to DG addition to existing distribution systems. Conclusions are captured in Section V.

II. FEEDER PROTECTION

Distributed generation can cause many challenges in the existing protection of distribution networks. Since DG is usually connected at the distribution level, the introduction of new generation source can provide a redistribution of the source fault current on the feeder circuits causing loss of relay coordination and potential overvoltages. Because most of the utility systems in the US are designed to supply radial loads, a DG running on an islanding mode is commonly not allowed in the US, thus, the existing protection methods receive the smallest impact. For example, some utilities need to restore the fault-cleared circuit as soon as possible using fast reclosing that can become much more complicated if a DG is still running in the islanding mode.

Other considerations include frequency and voltage levels, which can be greatly impacted since in some cases DG sources cannot maintain the local loads, leading to complex applications such as load-shedding, etc. The following sub-sections describe a few DG use cases, protection challenges and possible solutions, as

well as how they can vary depending on the DG capacity and configuration.

A. Dynamic Settings

Extensive power simulation studies have shown that distributed generation can cause protection issues like false tripping of feeders, protection blind spots decreased fault levels, undesired islanding, automatic reclosing block or unsynchronized reclosing.

When a considerable large DG is connected to a MV network, the fault current seen by the feeder protection unit may be reduced, leading to improper or non-operation of the relay or Intelligent Electronic Device (IED). This is called blinding of protection or *under-reach of protection*.

Conceptually in a DG system, when a fault occurs at the end of the feeder, the fault current consists of the contribution of (1) fault current from the utility network, **I1**, and (2) fault current from the local generation, **I2,** see Fig. 1. The impedance at the lower level of the feeder is increased with the addition of the DG, therefore fault current from the utility network **I1** is reduced. However, fault-current contribution from the local generation **I2** is added. If the local feeder protection settings are not adjusted to incorporate DG, the relay may not see the fault and will not operate.

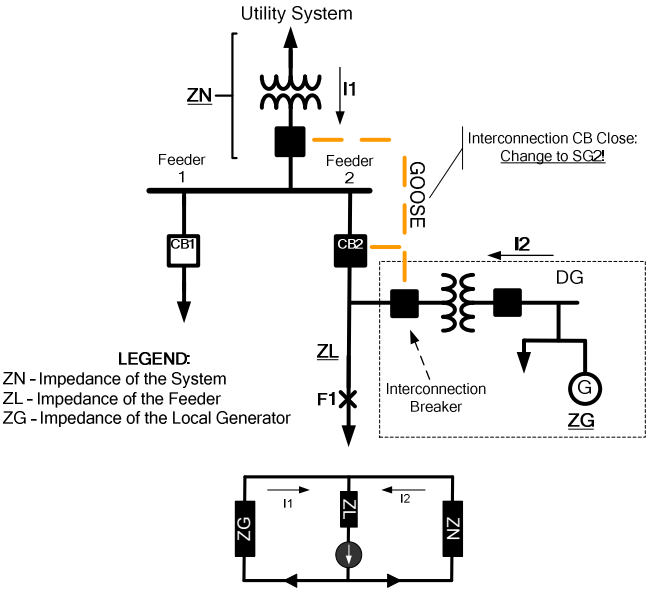

Fig. 1 Feeder protection in DG system and fault current components: (1) Fault current from the utility network, **I1** and (2) fault current from distributed generation, **I2**.

A similar concept is applied by the utilities when reclosers are used to establish a loop control scheme. Some IEDs with loop control monitoring support an automatic setting group change to adjust the fault conditions for the feeder that is now being fed by a secondary source.

In the case of multiple DG sources in the network or in adjacent feeders, more than one setting group may be needed to properly adjust all pickup levels and directional settings, as presence or absence of DG sources can significantly impact the short-circuit current that can flow in the direction of a local fault.

Newer protection devices are capable of up to 6 setting groups that can be set by binary inputs or communications, to assist proper relay parameterization based on network variances, while increasing sensitivity and maintaining selectivity.

This scenario could be supported by an IED that monitors DG operation in parallel with the utility network and adjusts the settings groups accordingly., For example if DG operates in parallel with the utility network, settings group 1 with pickup of **Z.ZZ** x **In** is used.; if DG is disconnected from the utility network, settings group 2 with pickup of **Y.YY** x **In** is used.

Newer communication technologies, such as IEC 61850, bring significant advantages for the information sharing between IEDs, feeder relays and the DG protection devices [10]. As the relays become IEC 61850-capable, the interoperability issues between the relays from different vendors is reduced. IEC 61850-capable IEDs can communicate using Generic Object Oriented Substation Event (GOOSE) messages, thus eliminating the need to support multiple communication protocols. Through GOOSE messages, the feeder relays could receive information from the interconnection IEDs on DG disconnection and adjust the settings and parameters accordingly by changing the protection setting group. Fig. 1 depicts a DG system with GOOSE messages.

B. Directional Protection

Directional protection is mostly applied where the overcurrent relays are bi-directional due to parallel sources. Usually acting quantities are current, voltage, and angle between the current and voltage. Directional protection can be suitable for both ground and phase faults. To determine the direction to a fault, an IED requires a reference to compare its line current with. This is known as the polarizing quantity.

When the phase voltages are balanced, the residual voltage is zero, however, during a ground fault, the residual voltage is equal to three times the zero sequence voltage drops on the source impedance and is therefore displaced from the residual current by the characteristic angle of the source impedance. These measurements or other calculated values are required by the relay to properly apply the directional protection.

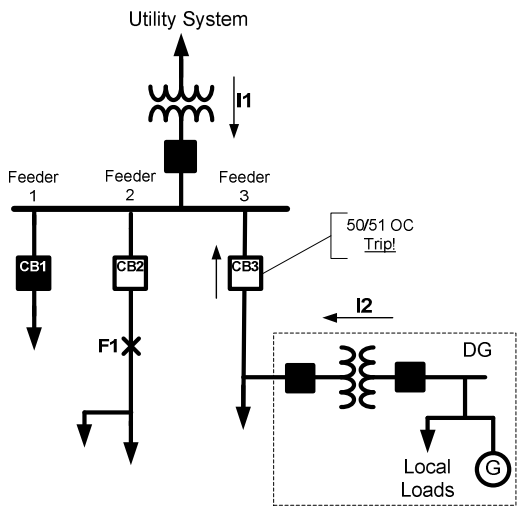

Fig. 2 Example of non-directional protection misoperating due to current from the DG source.

This leads to another possible scenario of improper coordination and protection adjustment when a DG is connected to a MV feeder: **false tripping**. In the case of a short-circuit fault on a feeder, it may trip correctly, but in addition an adjacent feeder with a DG may trip as well. Such incorrect tripping of a healthy feeder with a DG is most commonly seen when synchronous generation is used as a DG source, since the fault can feed and sustain the fault current. This can be corrected using directional elements to ensure that the feeder relay only trips on a forward fault. Examples of non-directional and directional protection are shown in Fig.2 and Fig.3. Note CB3 behavior in both scenarios.

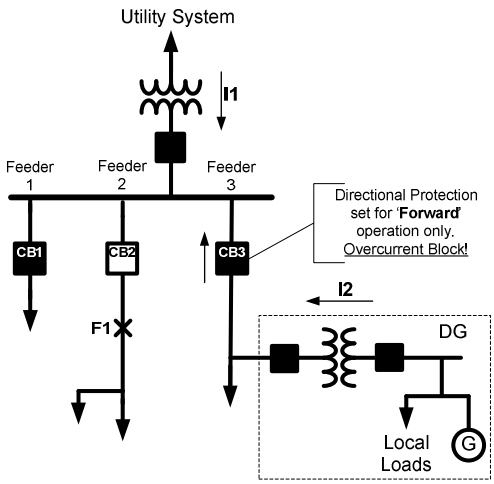

Fig. 3 Example of directional protection blocking a trip due to current direction.

Introduction of distributed generation in radial feeders can significantly impact the utility's protection scheme since current protection relays installed in substations may not have directional capability. If this is the case, existing protection units may need to be upgraded to include directional protection elements (67) to reduce the possibility of compromising the line protection. In addition polarization methods for the ground-directional (67/51N or 67/50N) protection units may need to be considered.

These methods may require commissioning additional voltage transformers since the zero sequence voltage (3V0) is obtained through the broken-delta secondary of a grounded-wye transformer configuration. However, advanced microprocessor-based relays are capable of calculating zero sequence voltage (3V0), without having to install extra potentail transformers (PTs) for 3V0 measurement; other relays also have the advantage of polarizing quantity by means of negative sequence.

C. Auto-Reclosing

As previously mentioned, running the DG when it is not connected in parallel with the utility network is commonly not desired in most regions. However, in the case of disconnection from the utility network, the dispersed generation may keep running as an island supplying the feeder. This can cause reconnection problems if reclosing is used for fast clearance and restoration. It could also lead to equipment damage due to overvoltage and reduced network reliability due to the presence of frequency fluctuations and abnormal voltages.

Although the rules set by a utility vary in every country or region, it is often found that anti-islanding protection is necessary. As a rule of thumb in North America, a DG should be disconnected from the network if abnormal voltage and frequency are detected. However, not only DG can create issues for the network protection, methods of fault clearance used by the utilities can also create damages in the dispersed generation sources. Basic under/over voltage and under/over frequency protection may not be sufficient to prevent a DG from operating in islanding mode. Interconnection protection should be considered to properly ensure this is accomplished; this is discussed in Section III.

Reclosers are predominantly located on the distribution feeder, although, as the continuous and interrupting current ratings increase they can be seen in substations as well, where traditionally a circuit breaker would be located. Reclosers have two basic functions on the distribution system: reliability and overcurrent protection. Reclosers are frequently applied to increase reliability, mainly due to three of their benefits: reclosing capability, single phase reclosing, and automated loop control capabilities. In the US, the automatic reclosing methods to clear faults in overhead MV distribution networks are mostly used. As an example, statistics have shown that over 70 percent of the faults in an overhead line can be cleared with a high-speed autoreclosing, and 15 percent with time-delayed autoreclosing.

Distributed generation, however, seems to be incompatible with the existing methods of autoreclosing sequences. The success of autoreclosing in most of the cases is related to the extinction of an arc during the dead-time or open-time of a shot or a sequence, but the presence of DG could prevent this from happening possibly leading to a permanent fault.

A DG operating as an island during an autoreclosing open-time can be easily linked as a reclosing problem. Should this occur, the DG source could maintain the voltage and keep feeding the fault current preventing the arc extinction, leading to an unsuccessful reclose. Studies have shown that even if a generation is connected to a delta-wye transformer on the LV side, the generation may not feed fault current in the case of a phase-to-ground fault since the delta would prevent zero-sequence current to flow towards the fault point. However, the generation can still sustain voltage on the network and keep the arc ignited. Ensuring the proper disconnection before a reclose shot is performed seems to be required, considering that the proper time for arc extinction and de-ionization of the arc path should be given.

Based on the previous statement and scenarios, it gets more and more convincing that reclosing can be problematic when distributed generation is interconnected with the utility system. Still, it is hard to imply that a utility will change the protection scheme of autoreclosing just because DG is present. Various interconnection rules set by utilities seem to be inclined towards making interconnection rules suitable for autoreclosing (anti-islanding protection).

Commonly, in North America it is required that DG is disconnected when the main-feeder breaker trips, and only reinstated once the auto-reclosing sequence is completed and the fault has being cleared. However, it is challenging to accomplish the prevention of islanding-mode since the dead-time or open-time has to be molded to ensure arc extinction and arc-path dissipation. If the typical fast reclosing method is applied by the utility – a

dead-time of 0.3 to 0.5 seconds – very fast anti-islanding protection is required.

Let's consider a DG system with a fault (F1) as shown on Fig. 4. Without DG for such fault, some utilities may implement a reclosing sequence where the feeder breaker initiates multiple shots - 3 recloses before a lockout. When the fault is detected by the IEDs, the feeder breaker trips (3.5 cycles to open for some breakers), after an open-time of 0.3 seconds for a fast reclose, breaker closes in approximately 3.5 cycles. Once the fault has being cleared, the system is restored back in approximately 0.417 seconds (0.058 + 0.3 + 0.058).

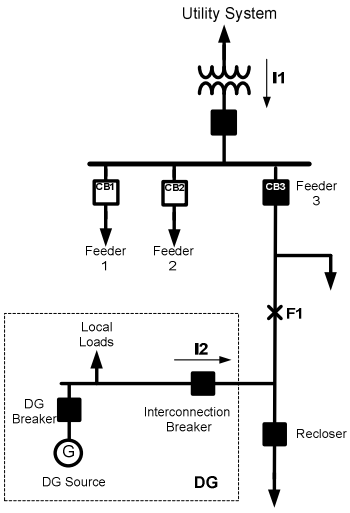

Fig. 4 DG usage with feeder protection and a recloser.

With DG added to the network as shown on Fig. 4, to fully isolate the fault the interconnecting breaker (now needed) has to open so the arc can be extinguished. Usually, the interconnecting protection is based on undervoltage protection element. By the time interconnecting protection unit detects the loss of the main breaker and the interconnecting breaker trips, the feeder breaker may have initiated its reclose after 0.3 seconds and switched into a fault generating an unsuccessful reclose. A temporary fault may have now become a permanent one; forcing the feeder breaker to go into lockout after its three operations and isolating the whole feeder.

To avoid this scenario, fast reclosing time may have to be extended; some utilities have to adapt their reclosing sequences by increasing the first-shot open-time to 1 second to allow enough time for the interconnecting breaker to detect the undervoltage condition and trip under the undervoltage (27) element. With this in mind, the complete restoration time can now increase to 1.116 seconds. However, the condition of the main breaker tripping still leads to the possibility of the DG not detecting the loss of main breaker allowing the dispersed generator to run in the islanding mode. This is a potential issue when a good interconnection protection is not present. It can lead to out of phase reclosing (discussed in section III-C) due to generators falling out of sync. Synchro-check relays (25) can implement methods to avoid out-of-phase reclosing by checking that voltage is not present on the other side of the feeder breaker. However, some IEDs with 25 elements allow reclosing with synchro-check prior to a reclosing shot.

Since extending the reclosing times sometimes is not the best choice, 79 operations with embedded synchro-check function could be a potential solution. This avoids improper reclosing with the local generators running out-of-phase and maintains a faster reclosing time. If the DG is rapidly isolated from the grid during the first open-time, the IEDs can detect the loss of voltage downstream to the breaker, successfully close the breaker and restore power to the grid. If the interconnection breaker is not disconnected by the time the feeder relays initiates the first shot due to improper islanding detection, eventually the synchronization will fail on the feeder relay preventing the reclose. At this point, some relays can consider this action as a reclosing in progress and attempts to close after the second reclosing time if the synchronization is valid and voltage is not present, or in worst case, go to a lockout state.

Let's consider the following example (see Fig. 5), the dispersed generator running in parallel with the network is connected through lines A and B. When a fault F1 occurs between A and B, both relays (located at each of the 52 relays) initiate a trip command to breakers 52-1 and 52-2, properly isolating the fault and 'killing' the arc at the fault point. The first attempt to recover is a delayed autoreclosure made a few seconds later. A reclosing (79) close command is initiated, and the synchro-check function confirms the voltage is not present on the lower side of the 52-1 breaker; usually these are designated as Live-Bus – Dead Line. After verifying that line AB is dead and the energizing direction is correct, the feeder IED energizes the line by closing 52-1. Now the interconnection relay receives a command to close 52-2; the DG relay checks for synchronization via Live-Bus – Live Line, and if synchronization is valid, a close is asserted and the feeder gets restored.

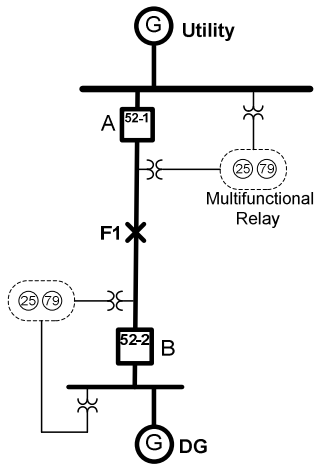

Fig. 5 DG example with multifunctional relays that combine 79 and 25 elements.

The examples presented suggest delaying the autoreclosing open-time to ensure that the local generation disconnects before a reclose shot is asserted. Increasing autoreclosing open time or avoiding instantaneous autoreclosing can simplify anti-islanding protection. However, this can significantly impact power quality for other customers that some utilities find difficult to accept.

To guarantee anti-islanding protection the utility can directly disconnect the DG source by tripping the interconnecting breaker when the main feeder breaker or other utility breaker operates. This can be an effective way to achieve anti-islanding, however, in

utility networks with line reclosers, direct-tripping would require communications from the substation breaker and other reclosers upstream to the distributed sources. This may require significant communication investments from the DG customers to properly set communications to satisfy the needs for this effective anti-islanding method. Newer communications technologies, such as IEC 61850, offer Ethernet-based communications and simplifies relay configuration and set up of this protection. For example, GOOSE messaging can be used to enable reliable delivery of fast trip commands to operate interconnecting breakers.

D. Inrush Current Detection

For distributed generation systems, an additional element should be considered within the protection scheme: the interconnection transformer. There are five common transformer configurations used when DG is intended for parallel operation with the grid, and each of these configurations has advantages and disadvantages related to the protection and coordination of the grid and the DG systems.

Although distributed systems vary from country to country and region to region, a network of multi-grounded points and 4-wire system allows the other protective equipment, such as lighting arresters, to be rated as phase-to-neutral. Due to variations in the interconnection transformer these devices can be damaged by overvoltages. The topic of the best interconnection transformer configuration for a given utility system and DG ratings is very complex and is not discussed in detail. Instead, this subsection analyzes the effects of introducing a DG interconnecting transformer on the feeder relays in the utility systems.

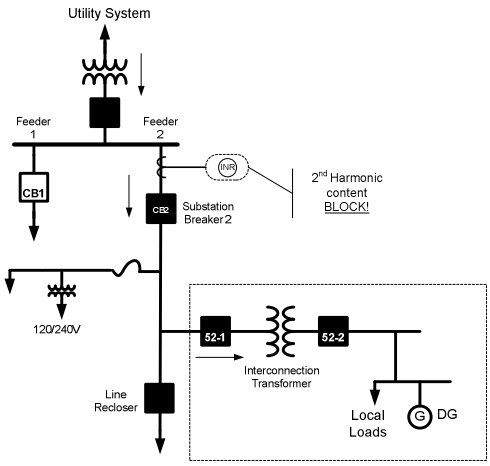

Fig. 6 DG example with blocking 2nd harmonic when interconnection transformer is energized.

As discussed earlier, many North American utilities require the DG to be disconnected from the grid upon failure conditions to avoid islanding. DG re-synchronization to the MV network is accompanied by the peak (inrush) currents due to interconnection transformer energization. During this time, current that flows through reclosers in service could reach magnitudes of 4 to 10 times of the nominal.

When the transformer is energized, the presence of second harmonic is expected. Feeder relays may see this high magnitude of current flow as a fault and can, therefore, initiate a trip command due to instantaneous overcurrent component (50P) in the substation breaker or in the feeder's reclosers.

Inrush current detection function could be used to block tripping when a downstream DG transformer connecting the DG is energized. Since 2nd harmonic restraint is normally not supplied on feeder protection relays unnecessary tripping can occur, as shown on Fig. 6, when the interconnection breaker (52-1) closes, an inrush current will flow through the feeder relay. Standard protection units may see this as a fault current and can trip circuit breaker 2 (CB2). By looking at the 2nd harmonic content in the phase currents, the feeder relays can detect that a downstream transformer is being energized and desensitize or block overcurrent protection elements. Newer IEDs for feeder protection have inrush protection embedded to their protection schemes.

If the inclusion of newer protection device(s) is not feasible or possible, existing feeder relays that do not support inrush detection, but support newer communication protocols, such as IEC 61850, can be set up for peer-to-peer communication, to coordinate and properly block overcurrent operations upstream, delay or desensitize the overcurrent elements. This can be achieved by using GOOSE messages, which also offer fast and reliable delivery of the information, easier and unified IED configurations, etc.

III. INTERCONNECTION PROTECTION

Interconnection protection, or anti-islanding, covers proper protection schemes to allow the distributed generation to run in parallel with the utility network and avoid a local generator operating in islanding mode. In most cases the interconnection of the DG to the grid is closely monitored by the utility to impose the protection requirements and ensure that they are met. A common setup of a small DG is shown on Fig.7.

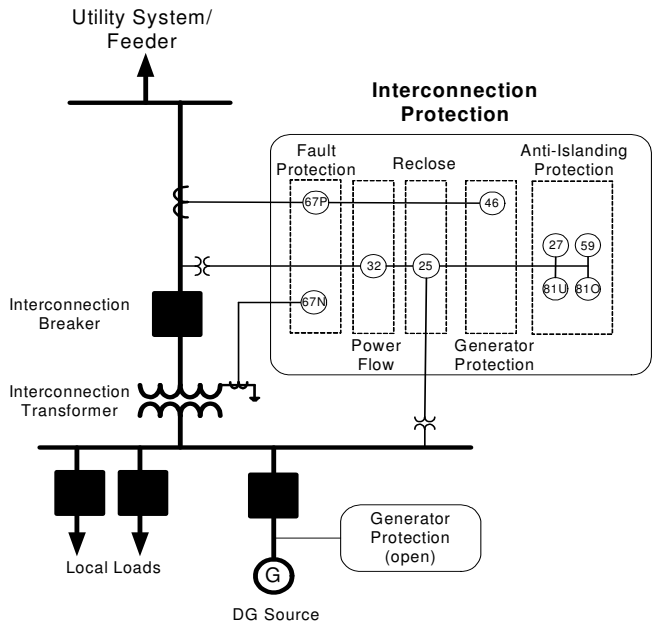

Fig. 7 A common Interconnection Protection setup for a small DG.

The interconnection protection can be set after or before the transformer on the utility side. The interconnection protection can vary depending on the generator type, generator size, the point of

generator interconnection to the grid, interconnection transformer configuration, etc. Details on selection criteria and recommendations for these setups are not discussed in this paper.

It is important to note that interconnection protection requirements don't usually include generator protection (which in many cases should be properly configured by the DC customers), or transformer protection, e.g. differential protection. Although the IEEE Std 1547 series of standards specifies interconnection protection requirements [9], each utility and or a region may set their own requirements [1].

Common protection elements used include:

- Directional power (32) for anomalous power flow
- Synchro-check (25) for restoration and reclosing
- Over/Under voltage (59/27) Over/Under frequency (81O/U) for detection of loss of parallel operation with the grid
- Directional elements (67/51P, 67/50P, 67/51N, 67/50N, 59N for zero sequence voltage) for fault detection and backfeed protection.

Operational challenges related to the use of the above protection elements are discussed in the subsections below.

A. Voltage and Frequency Protection

The most basic way to detect that the DG source is not running in parallel with the utility system is by means of the over-frequency and under-frequency protection (81), along with the over/undervoltage protection (59/27), that are set in the range the local generator units are intended to operate in. As previously discussed, when the DG sources are running in islanding mode, the frequency and voltage may quickly drift outside the normal operating conditions set in the relay if the load differs drastically from the DG capacity. However, over/under frequency/voltage protection can fall into a non-operating range if by the time the grid is disconnected due to a fault condition to avoid the DG sources operating as an island, the loads are almost balanced, in this case the interconnection protection relays may not operate.

Note that many utilities use fast reclosing for restoration purposes. When a significant fault is present in the network the frequency may drop and these generators may be forced to go offline. In some cases, to avoid nuisance tripping the relay can be adjusted to stretch the window of operation, but if the protection scheme of the network involves fast reclosing, the necessary trip may not appear. Care should be taken when setting up anti-islanding protection based on over/under voltage/frequency elements.

B. Reverse Power or Backfeed protection

The DG interconnection rules vary from utility to utility, some of them don't allow the dispersed generator to feed or sell power to the grid. Many of the distributed generator installations are intended to reduce the consumption of power by peak-shaving the demand and to ensure that the most critical loads keep running in the case of a fault event in the network. For this, sometimes it is required that directional protection is embedded in the interconnection protection relay to disconnect the DG section if the power flows to the utility or grid, triggering a reverse power condition and isolating the distributed generation. This can be achieved by using reverse power protection/detection (32P). It is important to note that this protection is not usually set for instantaneous operation and to avoid nuisance tripping it requires a time delay condition to account for the network load variations. Due to this time delay, the use of the reversed power protection/detection for anti-islanding protection should be considered only as a backup for DG isolation or disconnection.

Reversed power protection/detection function can also be used for directional 'under power' protection. An IED with directional under power protection could operate when the power that flows to the generator bus is below a certain percentage, i.e. 5 percent, of the total distributed power. When the power falls below a set level for a short period of time, a trip signal is asserted to disconnect the DG source from the grid. To prevent misoperations the relay may have to be set above the expected power flowing to the bus to account for sudden decrease in local loads,, similar to the 32P case described in the previous paragraph. Many DG customers are inclined to use this method. However extreme care should be taken, as it can lead to hazardous automatic reclosing due to the time delay condition of the reverse power operation.

C. Out-of-Phase Reclosing

Security against out-of-phase reclosure could be ensured by the use of voltage synchro-check units. In many cases, this type of protection is considered as a backup for anti-islanding protection. The main reason being is that this protection can potentially decrease the utility's energy supply quality by increasing restoration time or by leading to a feeder breaker going into lockout due to unsuccessful reclosing. Many utilities choose to look for other ways to ensure anti-islanding rapidly rather than increasing the reclosing time; however synchro-check function is still seen as a requirement for reconnection purposes. The synchro-check function (25) checks that the phases of voltages on both sides of the circuit breaker are synchronized within an acceptable accuracy range and performs a controlled reconnection of two systems which were disconnected after islanding

Synchronization methods are normally supported by the interconnection IEDs. One method can be used for dead bus detection to trip the interconnection breakers in case of sudden loss of voltage in the system due to an event or fault. This method is often used when fast reclosing is not a part of the protection scheme. Another method can be used for restoration purposes. Since the DG normally gets disconnected due to a fault using anti-islanding protection, eventually it has to reconnect to run in parallel with the grid again. To accomplish this, the utility system generator and the local generator have to be synchronized using the synchro-check element in the interconnection protection relays.

Challenges with out-of-phase reclosing need to be considered when autoreclosing methods are used in the protection scheme(s). As mentioned earlier, the generators could be affected by the protection methods of the grid. For example, consider effects of the reclosing sequence. When the system breaker or recloser on the network trips, the distributed generator may drift from the synchronism with respect to the grid's frequency, at this point, reclosing without synchronization, a common application on radial feeders, can damage a distributed generator.

The generators can accelerate or decelerate when the DG is not running in parallel with the utility system. Thus when a reclose shot is performed the voltages at the island side can have the opposite phase with respect to the phase of the master grid voltages. This can lead to severe consequences due to overvoltage

and overcurrent, introducing mechanical torques and stress to the local generators.

Although the connection of DG to the main utility systems using inverters may reduce the risk of damaging the dispersed generators, the effects of these stresses still exists. Higher risk can be expected when rotating machines are used for generation, generator failures due to non-synchronized reclosing are possible. Rapid disconnection of the DG should happen within the open-time of a reclosing sequence. Synchronized reclosing methods can help with protection coordination with the utility and assist in the integration of DG resources to the power systems.

Note that the loss of synchronism can happen when the DG is running in parallel with the utility system. Such a condition can occur due to a slow clearing of a system fault, causing an unbalance in the mechanical and electrical output of the generator that takes it out of synchronism. This makes distributed synchronous generators prone to shaft torque damages. This condition can appear when operation of line reclosers is delayed due to fuse clearance coordination, and subsequent operation of substation interrupters is delayed to coordinate with the reclosers. In this case, distributed generators experience a voltage decrease as they are driven out of synchronism. The 27 protection element may be useful in this scenario. However it still may not prevent the DG from going out of synchronization as this is a time delayed function. To address these challenges protection for loss of synchronism should be considered as an integral part of the protection coordination with the utility grid that also aims to protect the DG.

D. Negative Sequence protection

Interconnection protection rules are often set by utilities to ensure proper methods to link the DG to the utility grid. Protection for the local generation has been also considered and can be supported by the interconnection relays in the case no other generation protection is available for the small generators. One common scenario can include open conductors, which bring to the generators significant amount of negative sequence current. In the US, many utilities use fuses located downstream at the load level. This can result in the dispersed generator damage due to rotor overheating. DG owners are encouraged to consider the inclusion of negative sequence protection (46) in the interconnection IEDs to prevent rotor overheating.

The methods of single-phase reclosing differ from the previous case. Depending on the behavior of the interconnection protection, the DG can be automatically disconnected by a direct trip from a single-phase recloser, and can be reconnected once the fault has being cleared.

The use of single-phase reclosing as an interconnection breaker should also be considered. This can be advantageous if the interconnecting recloser follows reclose operations through the proper coordination. Due to a recloser operation, the negative sequence can be present in the distribution networks for a very short open time during single-phase operations. Eventually, the local generators will be affected by the negative sequence component because of one or two phase opening and therefore overheating. The damage curve of the generators can be used to estimate possible damage.

Note that recloser does not have the breaking capacity of a substation breaker. However, if the reclosing unit can successfully break the fault current contribution of the grid then this type of interrupter can be implemented in an interconnection breaker with single-phase operations. Although this method is not commonly used, it has advantages for the protection coordination related to reclosing operations and out-of-phase reclosing. In addition when this method is used increasing open-times becomes much easier to solve. If one phase is lost, the distributed generators don't fall out of synchronization and the feeder relays still can perform faster restoration using reclosing. Attention to the generation overheating must be given if this is considered.

E. Load Shedding

When a fault occurs in North America, the DG usually gets disconnected from the utility system and later restored to run in parallel with the utility system. During the disconnection period, two scenarios can be considered on the DG side: (1) when distributed generation-load ratio matches, and (2) when the local generation partially satisfies the load capacity or there is an unbalance between the generation and load at the DG side. In the first case, the interconnection breaker trips and the local loads run with no additional actions required. Second case leads to an application commonly known as load-shedding. Depending on the DG size, its owner can decide whether to include a frequency or voltage protection for load-shedding in a generator protection IED or as a part of the interconnection protection relay.

Load-shedding in substations typically is done using centralized or distributed under frequency load-shedding. However, this type of load shedding works only after the separation of an area of the system in an island with unbalance between the generation and the load. As mentioned earlier, in many cases the introduction of DG by a factory or big industry aims to reduce the consumption peaks and to ensure presence of energy in the case a fault event occurs in the network. Industries like petrochemical refineries or pulp/paper facilities apply load-shedding methods to ensure important machinery and production processes are not stopped if the power from the grid is lost and the DG capacity does not satisfy the needs at 100 percent.

In cases where multiple dispersed generators are present as DG sources, one should consider the cases when the generators may fail and get isolated, or one or a set of generators are offline or in maintenance. During these conditions the generation/load ratio is affected for which load-shedding applications may be used.

Any significant variation in the balance between the sum of the entire load connected and the generation capacity can cause frequency changes. Regulators usually sense small changes in the speed of the generators and attempt to adjust the speed to maintain the frequency within its normal range. However, if the speed is not regulated or not regulated fast enough, the system may collapse. Fast isolation of loads can bring the frequency back to its nominal value and avoid a system outage by means of overload until a satisfied generation-to-load ratio is achieved.

Considering multiple generators as part of distributed generation, the ratio between load and generation can vary depending on the active generation at the moment the DG gets disconnected. Typically, the amount of overload is not measured at the time an event happens in the network, for which the loads are disconnected or shed by 'blocks' or groups until the frequency is stabilized. Latest generations of IEDs are capable of handling

multiple blocks with configurable loads to shed with adjustable frequency pickup and time delays for each of these groups.

Simplest load shedding methods involve a predetermined load percentage to be included in one block to be disconnected once the protection unit detects the set frequency change. However, when DG overloading is considered, the load shedding requirements should be related to an expected overload percentage.

When the system analysis for DG is conducted, and the local generators do not satisfy the local loads, if the generation-to-load difference is considerably high, part of the loads can be grouped with the proper selectivity based on importance and dependability. This way, when the interconnection breaker opens and the DG is isolated, this group of loads can be automatically disconnected to balance or minimize the generation-load difference. This is a valid way of isolation in case the amount of dynamic load present is not high. Whether this is done or not, the interconnection IEDs can initiate a load-shedding scheme by isolating loads until the system frequency goes stable.

The decision on the amount of load that is required to be shed is taken through the measurement of frequency and the rate-of-change-of-frequency (df/dt). The use of this last parameter can potentially increase the effectiveness and reaction of the load shedding and at the same time it can also inhibit a group of load to be disconnected. If the frequency drop is slow and the frequency is recovering to its normal value the loss of power and industrial production can be prevented.

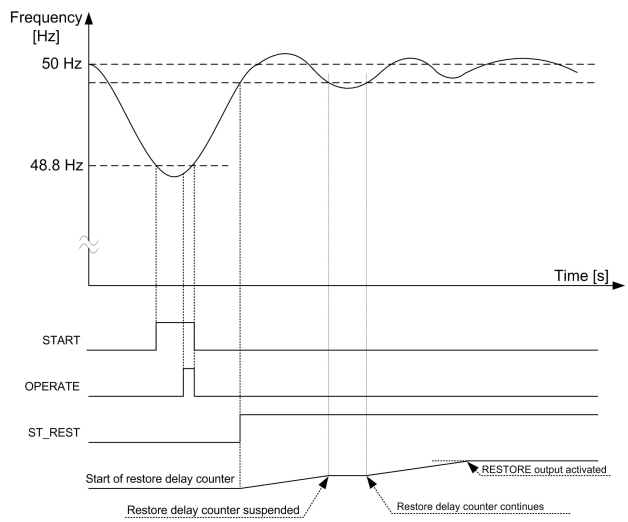

Fig. 8 Example of control characteristics based on rate-of-change-of-frequency function.

At a single location, many steps of load shedding can be defined based on different criteria of the frequency and df/dt. Typically, the load shedding is performed in 6 or 4 steps with each shedding increasing the portion of load from 5 to 25 percent of the full load within a few seconds. After every shedding, the system frequency is read and further shedding actions are taken only if necessary. In order to take the effect of any transient, a sufficient time delay is usually applied to the protection settings. An example of a protective relay operation using the rate-of-change-of-frequency to isolate the loads is shown on Fig.8.

Small industrial systems can also experience the rate-of-change-of-frequency as large as 5 Hz/s due to a single event. Even large power systems can form small islands with a large unbalance between the load and generation when severe faults or combinations of faults are cleared. Up to 3 Hz/s can be experienced when a small island becomes isolated from a large system. This is not the case for a disturbance in large power systems with rate-of-change-of-frequency is less than 1 Hz/s. Rate-of-change-of-frequency can be an efficient method for load-shedding applications.

F. Automatic Transfer Switch

So far we have discussed the integration of DG with one feeder and one source. However, that is not always the case: a breaker-and-a-half setup with a tie breaker that is normally open is a potential solution for the restoration of the local loads if the distributed generation does not completely satisfy the loading conditions. For the all previous cases, should there be a permanent fault in the system; the feeder gets fully isolated. The DG may run the local loads that it still can handle while the rest is disconnected. The restoration time may take several minutes or hours depending on the severity.

When two sources from the grid are present, the DG is always connected to only one. If one source is lost, the DG is transferred to the backup source on the network to restore all the loads. This is achieved using an Automatic Transfer Switch (ATS) controller and application. Often, there is a time delay considered before the DG is transferred to allow the upstream reclosers or breakers to finish all the reclosing sequences, while the process of anti-islanding protection, described earlier, is also considered. Note that during the reclosing shots, the DG interconnection breaker is usually open. For this application the utility transfer-scheme protection/controller constantly monitors the status of the interconnection breaker, the ATS, and the substation breaker position to properly control the transfer if necessary.

Let's consider a DG scenario with ATS and GOOSE messages and a temporary fault condition refer to Fig. 9. The feeder protection detects an overcurrent and trips the main feeder breaker CB1. The tie breaker (TIE CB) stays open. Then, the substation breaker relay, controlling CB1, directly trips the interconnecting breaker CB via GOOSE messages. The DG gets isolated at this point. The substation breaker may initiate a fast reclose (assume in 1 second) and finds that the fault is no longer present. During the time the substation breaker was open the ATS detected an undervoltage or dead-bus condition and initiated a timer (5 seconds for this example). Since the voltage was restored after 1 second, the ATS detects the presence of voltage after 1 seconds and doesn't take any action. The interconnection protection receives a close command. Then when synchronization is achieved, the interconnection breaker closes and by means of Feeder 1 the DG is restored back to operate in parallel with the grid.

Now, let us consider the same setup with a permanent fault on Feeder 1. The substation relay detects the overcurrent and trips the substation breaker (CB1), which directly trips the interconnection breaker via GOOSE messaging. Then, the ATS controller detects the undervoltage and initiates a 5 seconds timer. Within 1 second of the first trip, the circuit breaker 1 (CB1) initiates a reclosing sequence.

Because the fault is still present, the primary feeder breaker trips again, open time of the recloser now is 20 seconds. After 5 seconds the ATS finds absence of voltage in the bus and initiates the transfer of the DG to the backup feeder for temporary restoration. Speed of the ATS operation depends on its type: if is a motorized switch this operation may take an additional 5-10 seconds (let's use 8 seconds for example).

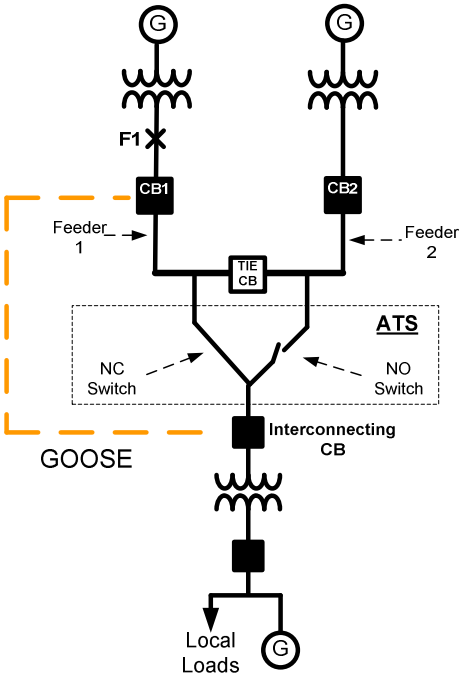

Fig. 9 DG example with ATS and direct tripping via GOOSE messages.

After approximately 11 seconds after the second trip of the main breaker (CB1), the DG is set to be restored and run in parallel with the backup Feeder 2, a synchro-check function is performed in the interconnection IED, and the interconnecting breaker is closed. Meanwhile, the main feeder breaker is performing its 3 reclosing sequences: second open time is 20 seconds, after which it recloses, sees the fault, and trips again, and a third reclose will be attempted 20 seconds later, after which it closes, as the fault is still present, CB1 trips and goes to lockout.

Typically, field operation personal is sent to the field to investigate the event, and if the problem is corrected, CB1 is closed, the ATS controller detects that the voltage is back online for a period of time and, depending on the utility requirements, the interconnection breaker may trip. The ATS may perform a transfer back to the main feeder without load, or perform no action. If it was a closed transition and the DG customers would not experience any interruption during such transition. Typically this last one is performed.

IV. DISCUSSION

Section II and Section III describe various scenarios and known challenges that introduction of distributed generation brings to the existing power systems and networks. This discussion section brings readers attention to things to consider when introducing the DG, main discussion points and issues around them.

Communication is considered to be one of the main challenges that utilities face when introducing the DG. Existing networks and infrastructures were not designed to support bi-direction power flow, non-radial feeds, etc. Network management has not been provided for coordinating actions in the various parts of the grid. The most difficult part of this could be maintaining a reliable and secure communications between all devices. As described in this paper, IEC 61850 GOOSE messages can be used, but the addition of devices needing to communicate to customer-installed devices could turn out to be a real challenge that will drive the cost of these types of installations upward. Challenges of communication systems and technologies also need to be addresses. For example, the use of WiMax wireless communications to carry GOOSE messages for DG control lead to realizations that buffer size for some WiMax devices may not be sufficient for supporting defined GOOSE repetition rates. Care should be taken when updating, configuring, managing and maintaining communications infrastructure.

The need for detailed power systems modeling could introduce another area of issues. With multiple DG sources on a system power system modeling becomes a requirement, as multiple scenarios need to be analyzed. This, in turn, increases the challenge of maintenance testing and paperwork. Models as well can be used for dynamic relay settings. For example, it could be possible to manage recloser settings through modeling software that could dynamically change the settings when DG sources and other system devices come on and off line.

Dynamic settings concept opens an exiting new range of possibilities, but is essentially a huge departure from the traditional approach based on a firm belief that a technician should always be at the device while making changes to a relay. However, with the push towards self-healing Smart Grid architecture, such a departure could become necessary to some degree. It may be possible to have some safeguards in place: for instance the need for a change in relay settings can cause a device to call for an operator intervention.

Power quality could also become an issue if DG sources are unreliable or are only used for peaking situations and brought in and out on a daily basis. This would show up less in a transmission system that is more robust and capable of absorbing these types of situations, but even distribution capacitor installation can cause issues with some types of equipment. The constant switching in and out on a generation source would have much more potential to cause power quality issues.

Dynamic relay settings are geared to support proper operation and protection co-ordination in presence and absence of DG source(s). Pickup levels with appropriate margins, co-ordination commands, etc need to be considered. Automatic change of relay settings could also be possible.

When DG is added to radial feeders, directional elements should also be considered. Existing protection units may need to be upgraded to include directional (67) protection elements to reduce the possibility of compromising the line protection in such systems. In addition polarization methods for the ground-directional (67/51N or 67/50N) protection may need to be considered as well.

Auto-reclosing function needs to be taken into account for DG reconnection to the utility system. The reclose function as a minimum may need to incorporate synchro-check controls to

protect equipment damage due to out of phase reclosing and other anomalies.

Inrush current detection is another function that needs to be supported by a feeder relay when adding a DG source. This function uses 2nd harmonic detection to prevent unnecessary tripping when downstream interconnection transformer is being energized.

Various functions may need to be added to support so-called anti-islanding protection. Noting that in North America the DG is usually tripped off the utility system if a fault occurs, while in Europe operation as an island is generally supported.

Over/under voltage and over/under frequency protection may be used in many circumstances. As fast reclosing is often required for restoration purposes, care should be taken when setting ranges are set for these elements, a stretch window of operation can be considered.

Reverse power or backfeed protection can also be added to detect and the fault and disconnect the DG from the grid. However, as it requires a time delayed trip it cannot be set for instantaneous operation.

Out-of-phase reclosing with synchro-check element supervision may need to be considered. The prevention of out-of-phase reclosing in protection schemes may lead to various challenges. Out-of-sync conditions can not only result result in disconnection but also mechanical / electrical damage. It is possible to have local and main generator not synchronized even when DG is connected and runs in parallel with the utility system.

Negative sequence protection could be considered to prevent DG's rotor overheating. Single-phase operation offers significant advantages in this regard and should be considered.

In addition, concepts of load-shedding and automatic transfer switching should be considered and included. First could be an elaborate approach to balance the loads with and without DG being connected. Second, load transfer may be initiated if necessary, upon a change in system conditions.

V. CONCLUSION

This paper discus dispersed/distributed generation sources, and issues that come up when they are introduced into existing grids and microgrids. Various scenarios and use cases are described in details to assist in understanding the possible issues and potential solutions, for existing power system networks have not been designed for sophisticated operations and control with bi-directional power flow and connecting and disconnecting multiple local DG sites. The added network complexity calls for the addition of various protection elements to protect and coordinate of the systems with DG sites.

Introduction of additional elements can lead to significant upgrades and investments that may or may not be economically justified for a given size of local generation. With the current push towards renewable energy, self-healing architectures, reduction of transmission levels and maturing of distribution levels, common understanding of possible issues and remedies will assist utilities, equipment manufactures, researches and academics alike.

REFERENCES

[1] M.Nagpal, F. Plumptre, R. Fulton, T.G.Martinich "Dispersed Generation Interconnection – Utility Perspective", IEEE Transactions on Industry Applications, Vol. 42 N3, May/June 2006.

[2] C. J. Mozina "Impact of Green Power Generation on Distribution Systems", White paper.

[3] C. J. Mozina "Update on the current status of DG interconnection protection – what IEEE P-1547 does not tell you about DC interconnection protection", White paper.

[4] C. J. Mozina "Impact of Wind Power Generation on Distribution Systems", White paper.

[5] M. Mills-Price, M. Scharf, S. Hummel, M. Ropp, D. Joshi, G.Zweigle, K. G. Ravikumar, B. Flerchinger "Solar Generation Control With Time-Synchronized Phasors", Proceedings of TAMU 2011 Conference, pp.160-167.

[6] "US Solar Industry: Year in Review 2009", Solar Energy Industries Association, Washington, DC, April 15, 2010. Available at http://www.seia.org

[7] SunSmart Tomorrow's Power Today Available at http://www.sgsunsmart.com/index.htm

[8] D. Gomes, T Harvest "Examples of protective relaying interface of Distributed Generation with Automatic Transfer between two CenterPoint Energy Distribution Feeders", Proceedings of TAMU 2011 Conference, pp.146 – 154.

[9] IEEE Std 1547-2003 (reaff. 2008) IEEE Standard for Interconnecting Distributed Resources with Electric Power Systems.

[10] L. Andersson, C. Burnner, F. Engler "Substation Automation based on IEC 61850 with new process-close technologies", CIRGRE 2002.

[11] E. Rosolowski , A. Burek, L. Jedut "A new method for islanding detection in Distributed Generation".

[12] F. Mekic, K. Alloway, C. Angelo, R. Goodin "Fault detection isolation and restoration on the feeder (FDIR): pick your technology", CIRED, 21ST International Conference on Electricity Distribution, Frankfurt, 6-9 June, 2011.