CityLink Tulla Widening – Bulla Road to Power Street

Dr. Kabir Patoary | Principal Engineer – Bridges | GHD

Introduction | Presentation outline

- Project Background
- New bridges:
  - Bulla Road southbound entry ramp over the Collector Distributor
  - Pascoe Vale Road over Western Link
  - Mt Alexander Road over Moonee Ponds Creek
- Widening or modification of existing bridges:
  - Bulla Road Bridge North Abutment Modification **(Separate Paper)**
  - Western Link over Pascoe Vale Road
  - Moonee Ponds Creek Bridges 1,2,4 and 6 **(Separate Paper)**
  - Citylink southbound ramp to power street and Burnley tunnel (Ramp Z)
  - West Gate Freeway eastbound elevated structure
- Conclusions

Introduction | Project Background

- 2 packages of work
  - Melbourne Airport to Bulla Road
    - Funded by Federal and State Government
    - Delivered by VicRoads
    - Approx. length of 8 kM
  - Bulla Road to Power Street (CTW - this project)
    - Funded and delivered by Transurban
    - Approx. length of 16 kM

- One extra lane in each direction
- Contract Awarded May 2015
- Expected Completion by end 2017
- Total capital cost ~$1.28 billion for both packages

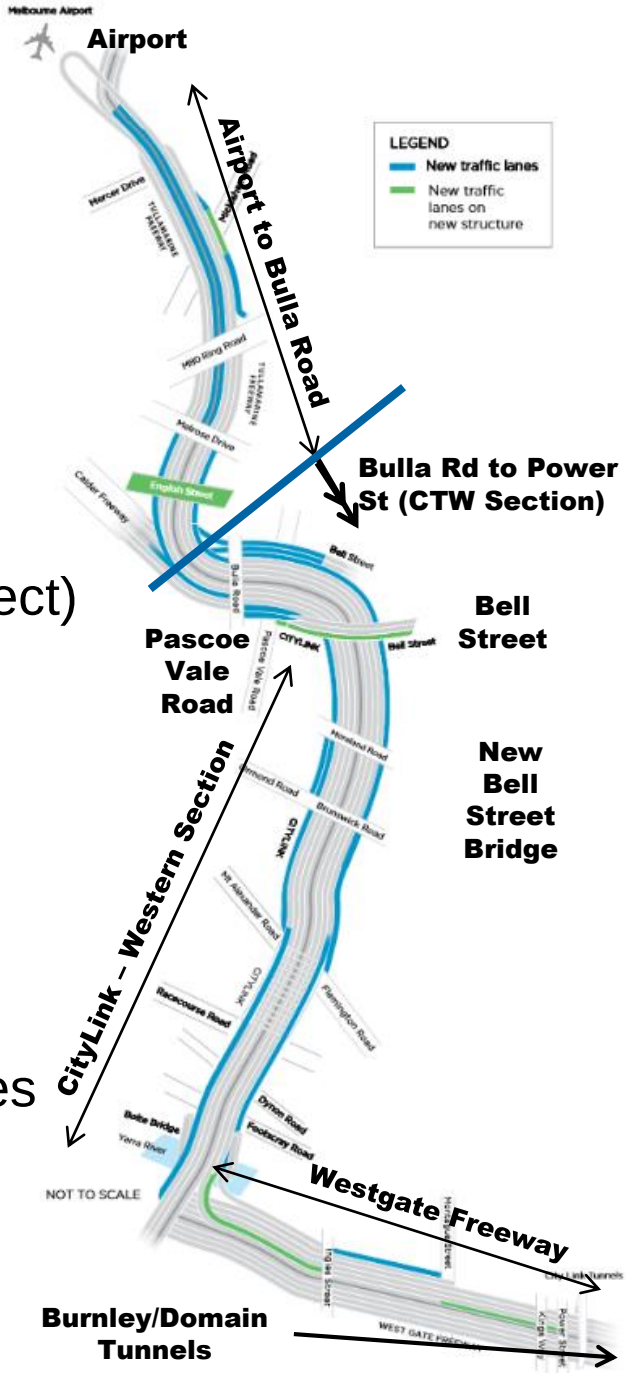

Introduction | Project Background

• Client	Transurban
• Contractor	CPB – Design &Construct Partner
• Main Consultants	Aurecon-GHD Joint Venture (AGJV)
• Other Consultants	Doulgas Partners (geotechnical)
	SLR (Noise Modelling)
	KBR (Proof Engineering)
	PowerPlant (Lighting Design)
	Hassel (Urban and Architectural)
	Visionstream (ITS)
	Davis Langdon & AECOM (IR)

Introduction | Project Background

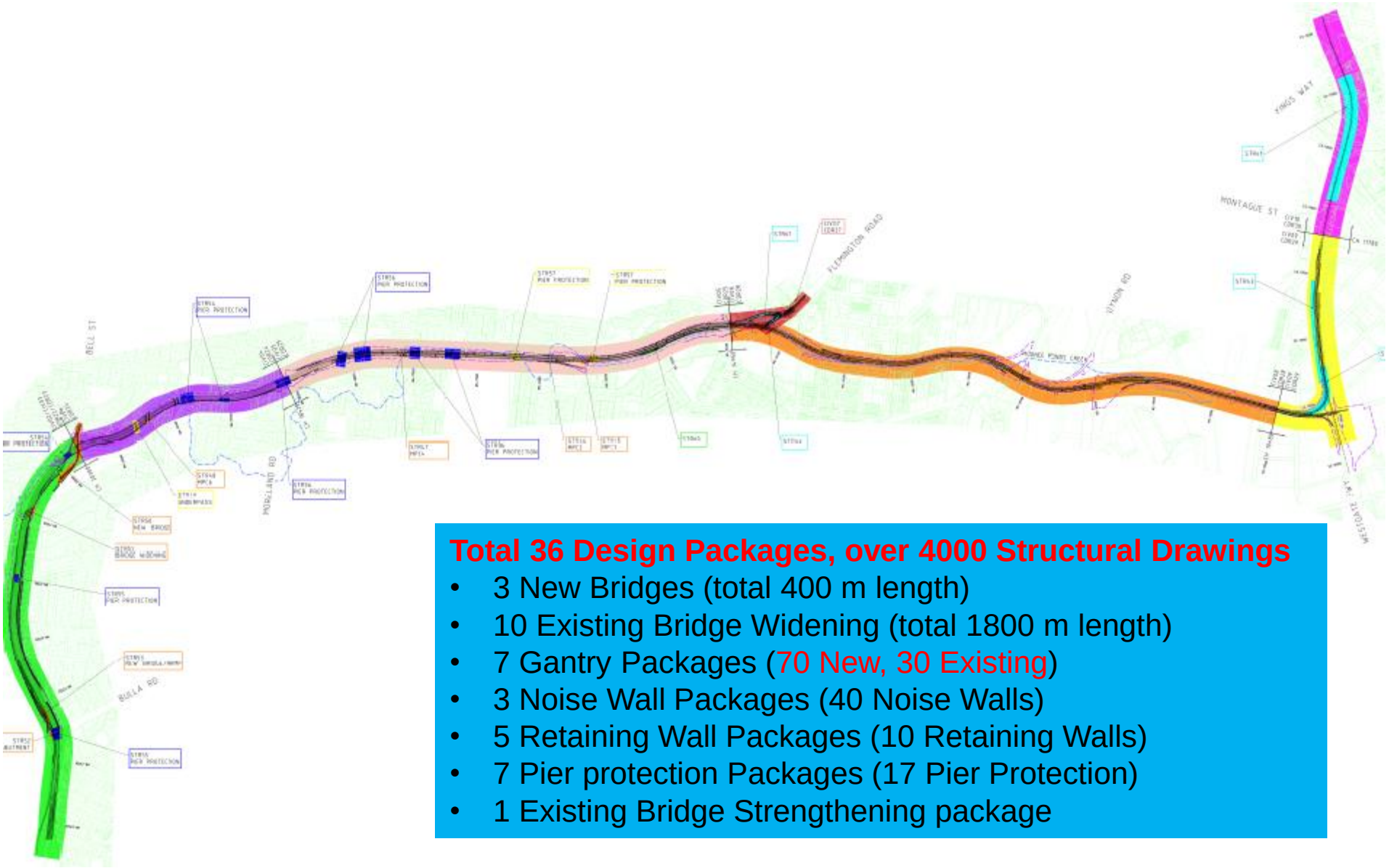

Total 36 Design Packages, over 4000 Structural Drawings

- 3 New Bridges (total 400 m length)
- 10 Existing Bridge Widening (total 1800 m length)
- 7 Gantry Packages (70 New, 30 Existing)
- 3 Noise Wall Packages (40 Noise Walls)
- 5 Retaining Wall Packages (10 Retaining Walls)
- 7 Pier protection Packages (17 Pier Protection)
- 1 Existing Bridge Strengthening package

Major Design Challenges

- Large Number of Design Packages
- True Brown Field Site
- Coordination/Integration between three design offices and four verification offices
- Semi-Alliance Environment for D&C
- Very tight delivery timeline & Penalty
- Stakeholders & IR Approval

New Bridges | Bulla Road southbound entry ramp

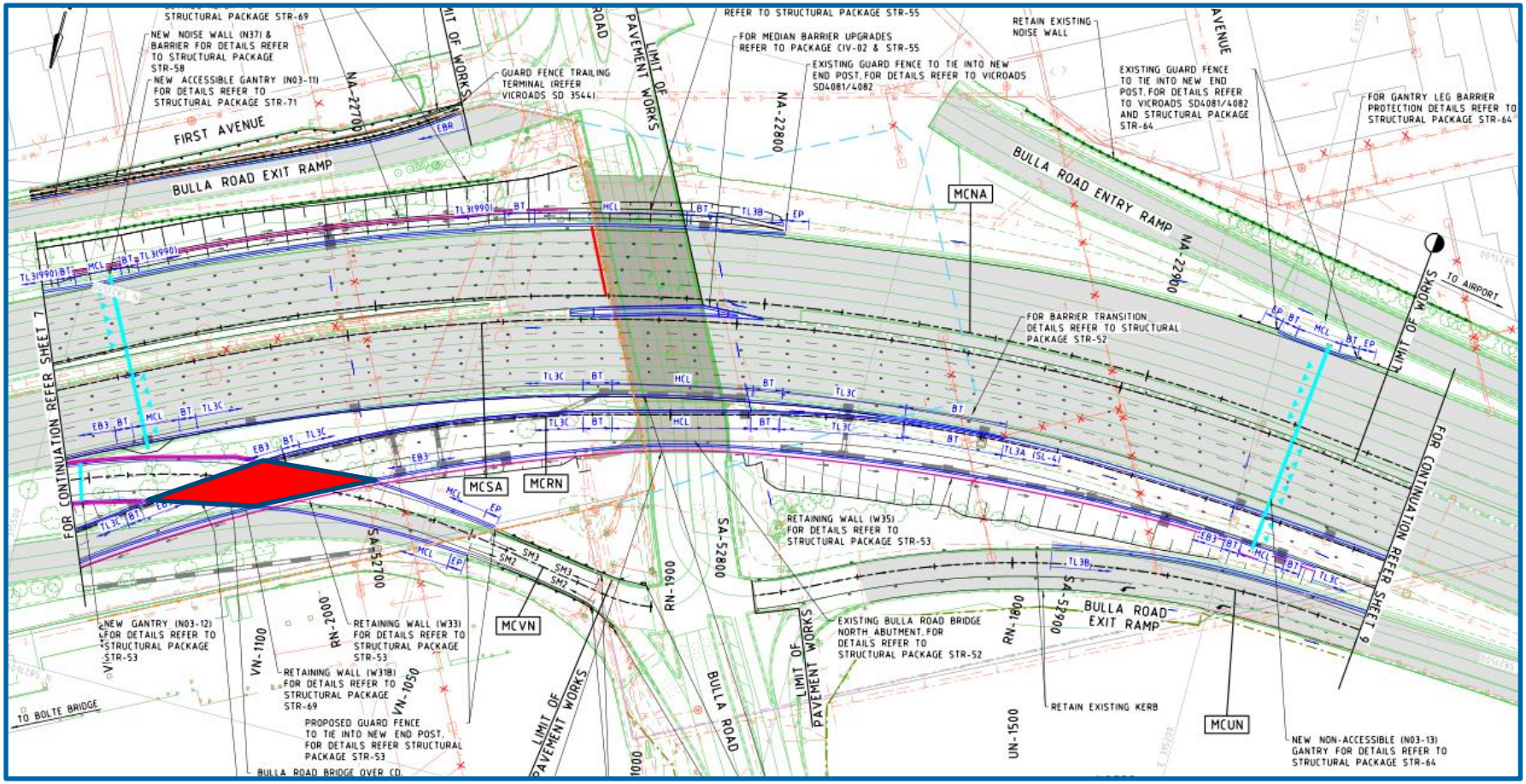

New Bridges | Bulla Road southbound entry ramp

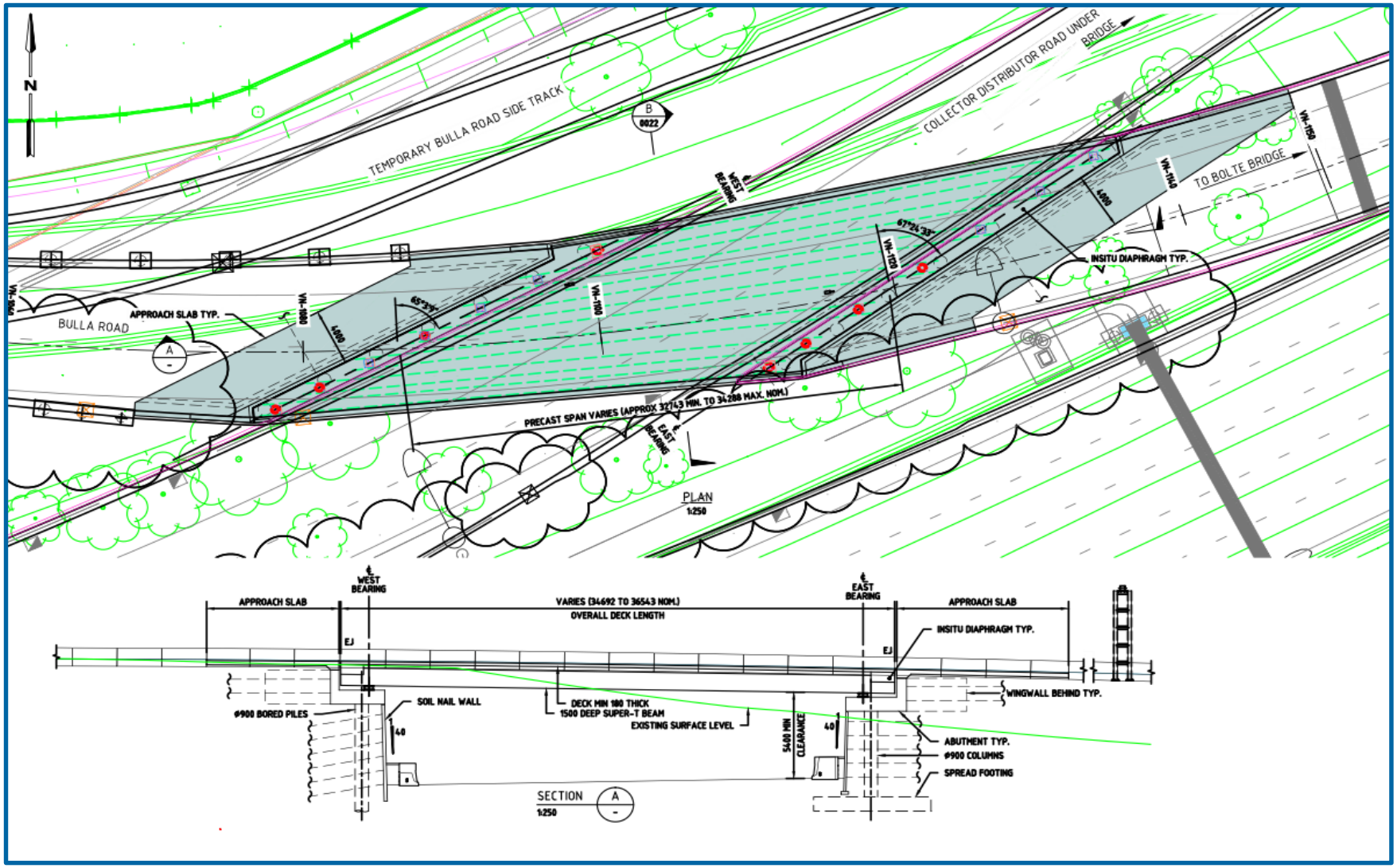

New Bridges | Bulla Road southbound entry ramp

Major Design Constraints

- Existing ground profile require one abutment to be top down with Soil Nail and another bottom up construction with RE Wall
- High bridge skew requiring an in-situ diaphragm at abutment
- Construction staging including limited access for crane positioning.
- Heavy beams due to high skew and long span resulting in onerous crane requirements.

New Bridges | Bulla Road southbound entry ramp

New Bridges | Bulla Road southbound entry ramp

Design Details-Girder End

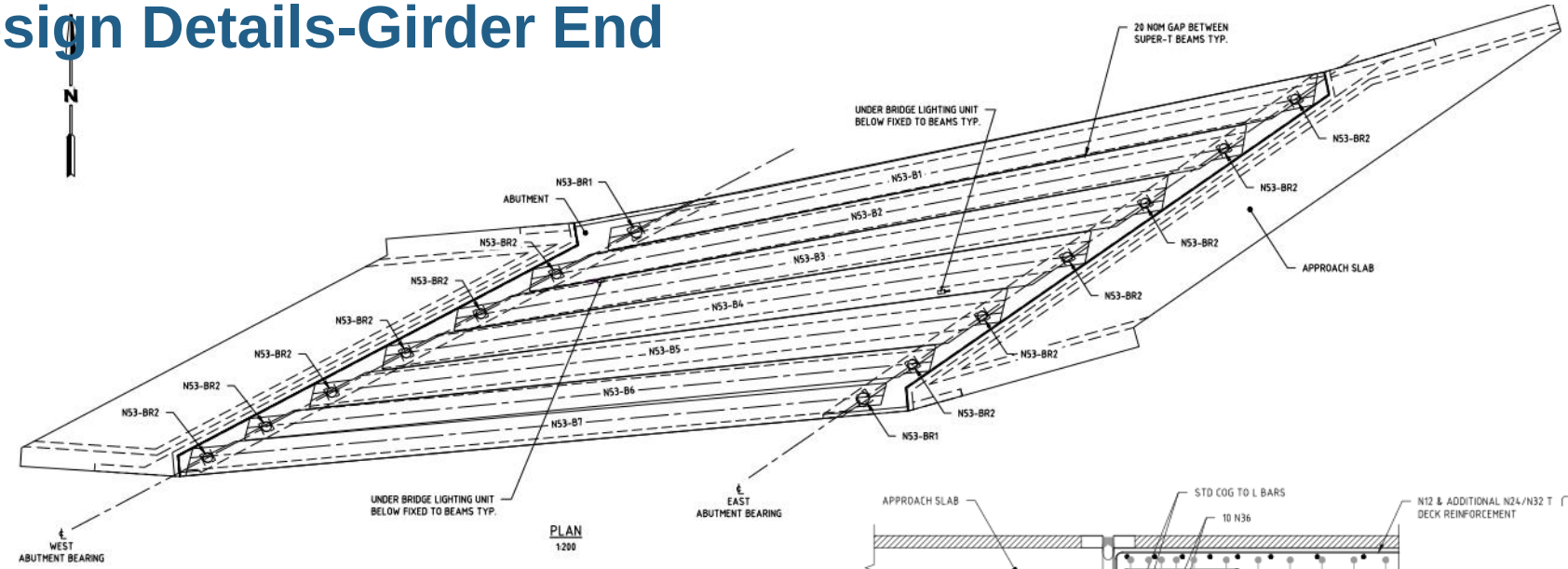

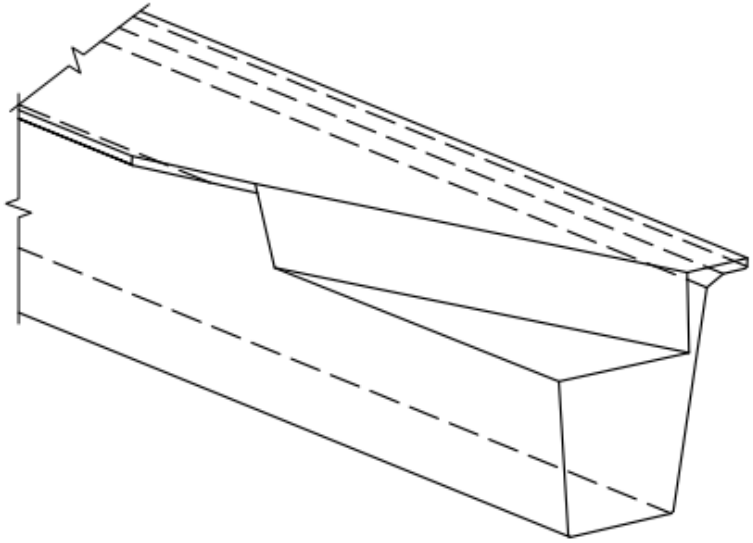

ISOMETRIC VIEW
TYPICAL AT END OF BEAMS

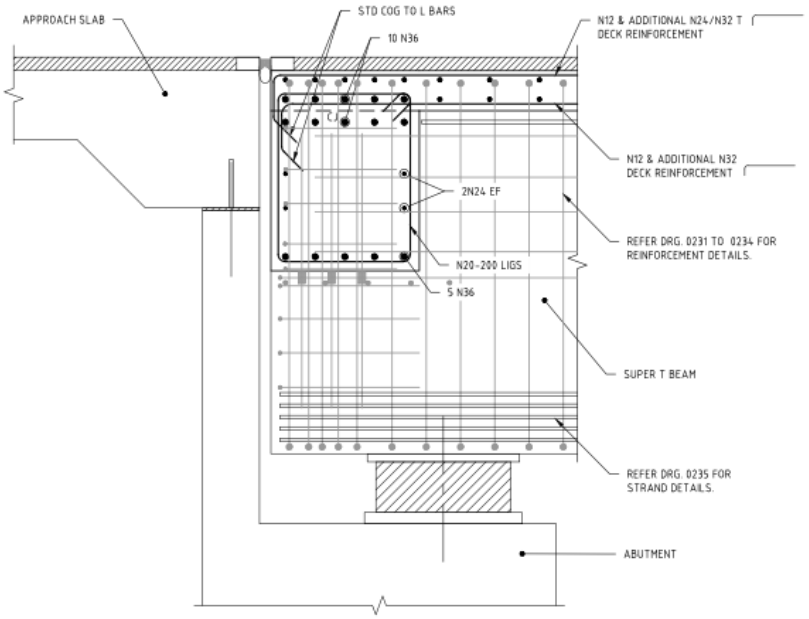

SECTION 1:20

A	B	C	F
-	0281	0281	0234

New Bridges | Bulla Road southbound entry ramp

Design Details-Approach Slab

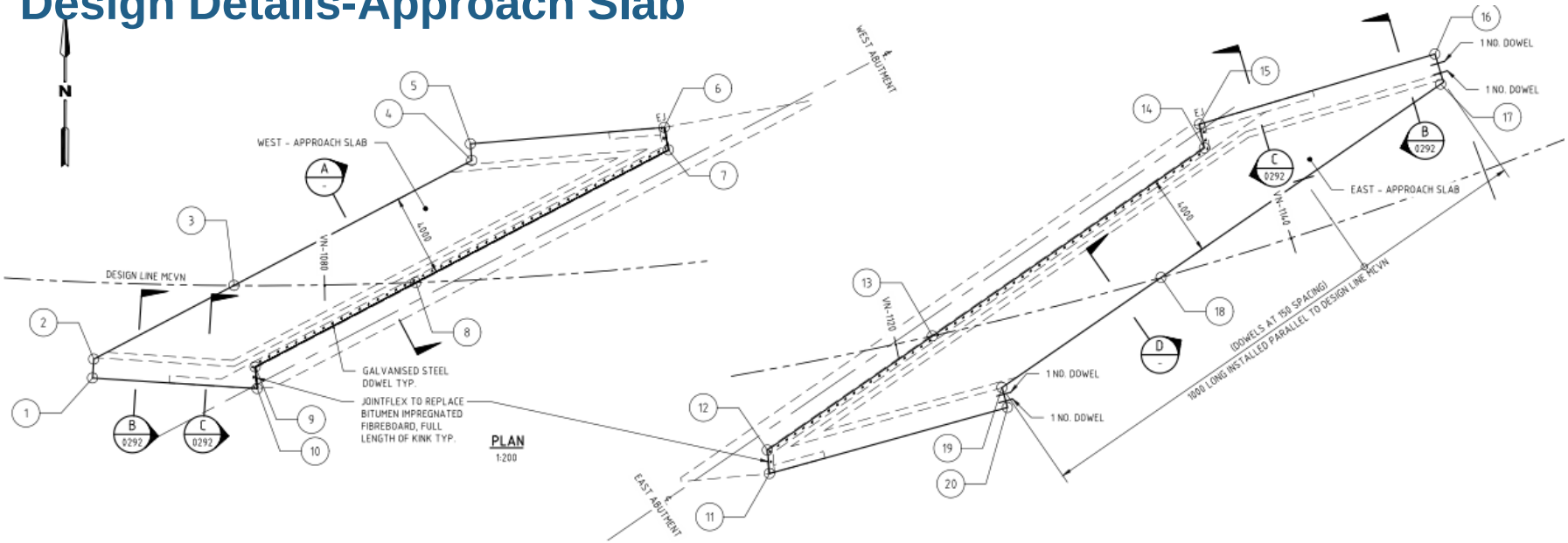

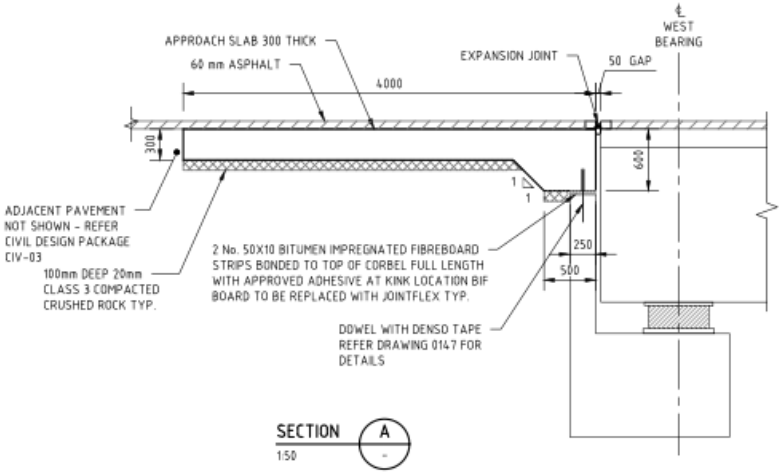

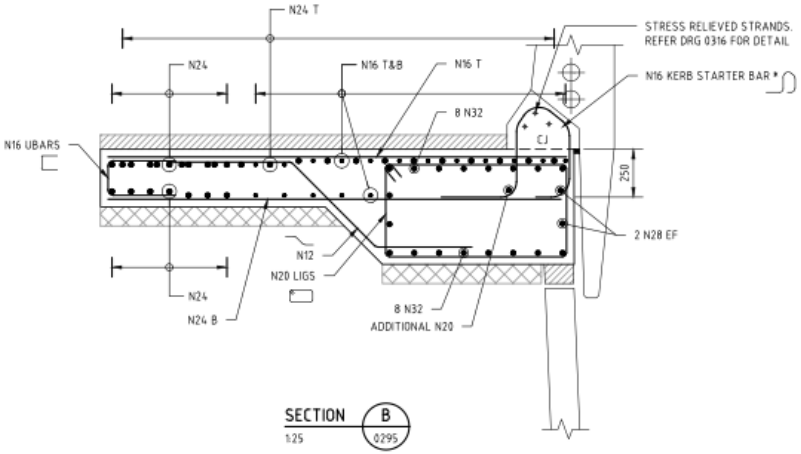

New Bridges | Pascoe vale Rd Bridge over Western Link

- Also Called Bell Street Interchange
- Existing Bridge → 1 lane for Tullamarine Fwy on Ramp and 1 for Pascoe Vale Rd bound traffic
- New bridge → Connecting Bell St to Pascoe Vale Rd traffic
  - Free up an additional lane on existing bridge
  - Eliminate dangerous left hand merging

New Bridges | Pascoe vale Rd Bridge over Western Link

- Complex site requiring the bridge to span over:
  - Entire CityLink carriageway (11 lanes)
  - Existing Pascoe Vale Rd exit ramp bridge
  - Moonee Ponds Creek channel
  - Craigieburn Railway line (2 tracks)
  - Close proximity to Strathmore Secondary College

New Bridges | Pascoe vale Rd Bridge over Western Link

- 269m long structure with maximum span of 62m
  - Spans 1 to 4 → Continuous steel box girders
  - Spans 5 to 6 → Simply supported Super-T girders
  - Piers skewed up to 29 degrees to suit site geometry
  - Curve radius of up to 165m

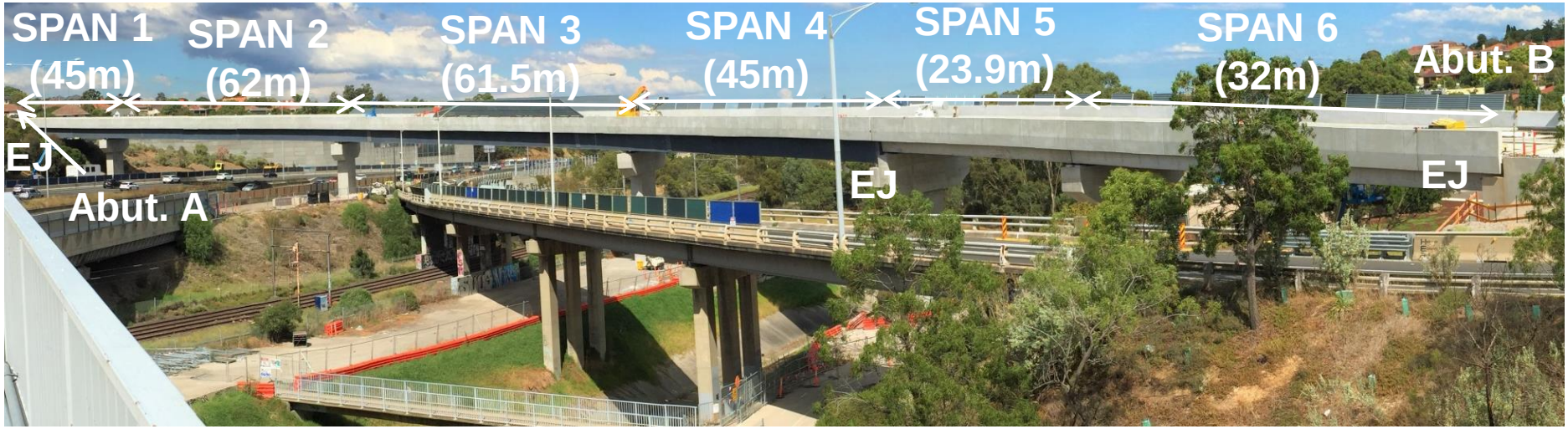

Span Arrangement

New Bridges | Pascoe vale Rd Bridge over Western Link

Superstructure

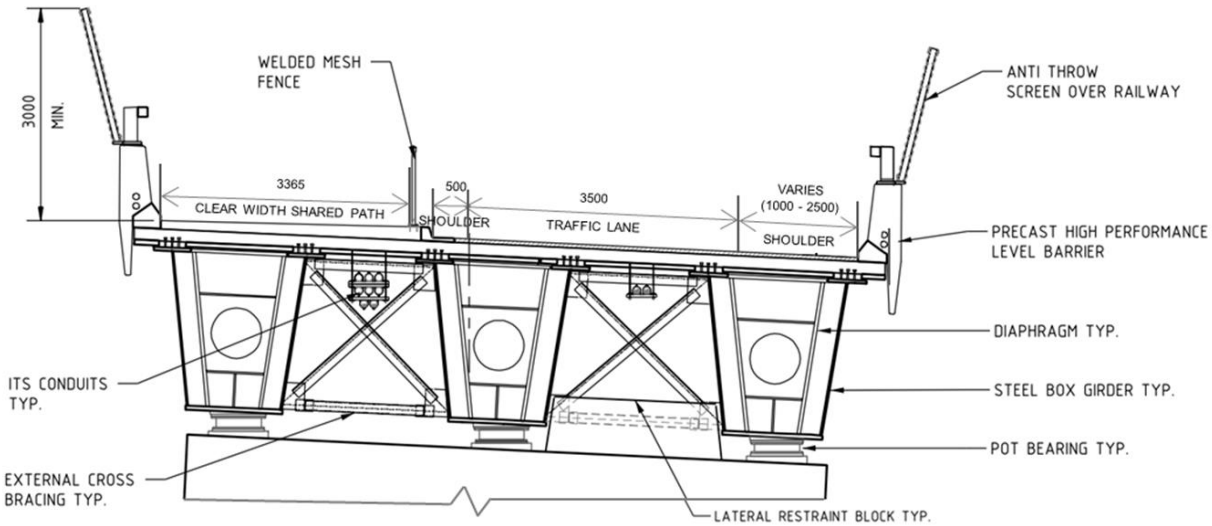

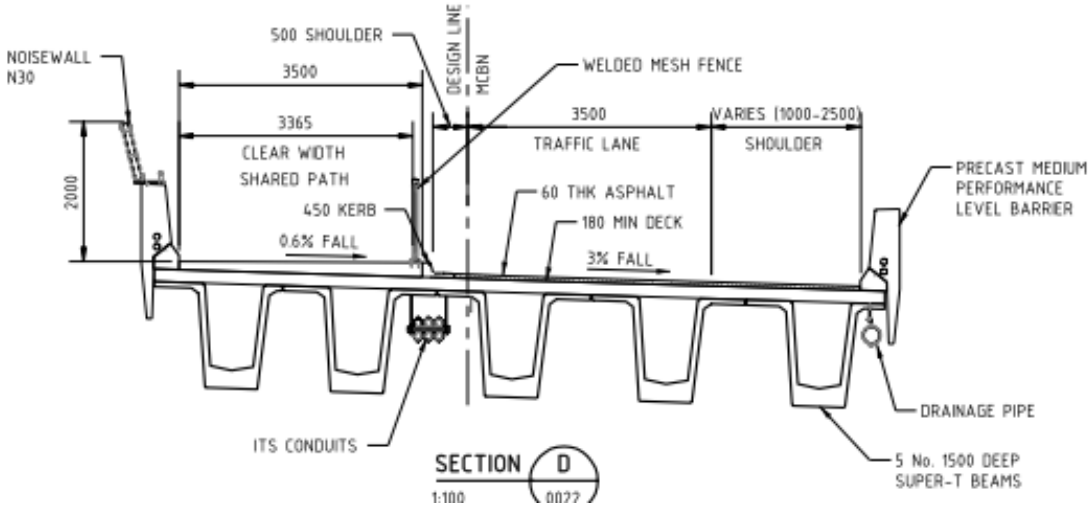

New Bridges | Pascoe vale Rd Bridge over Western Link

Substructure

Abutment A

Steel Box Pier

Abutment B

Transition Pier

Analysis and Design

- 3D “spine” grillage deck model using Spacegass
  - Steel box modelled as single beam elements
  - Rigid outriggers pinned to webs
- Response spectrum analysis for earthquake design due to complex geometry

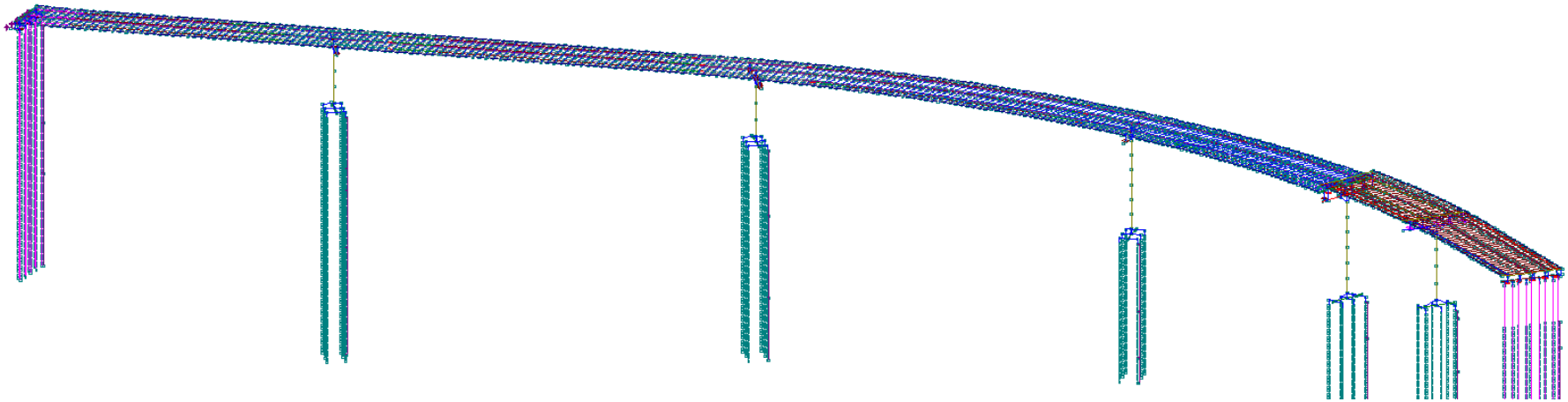

3D Spacegass Grillage Model

Analysis and Design

- Local steel Finite Element Models in MIDAS Civil
  - Skew diaphragms beyond “hand calculation” in AS5100.6

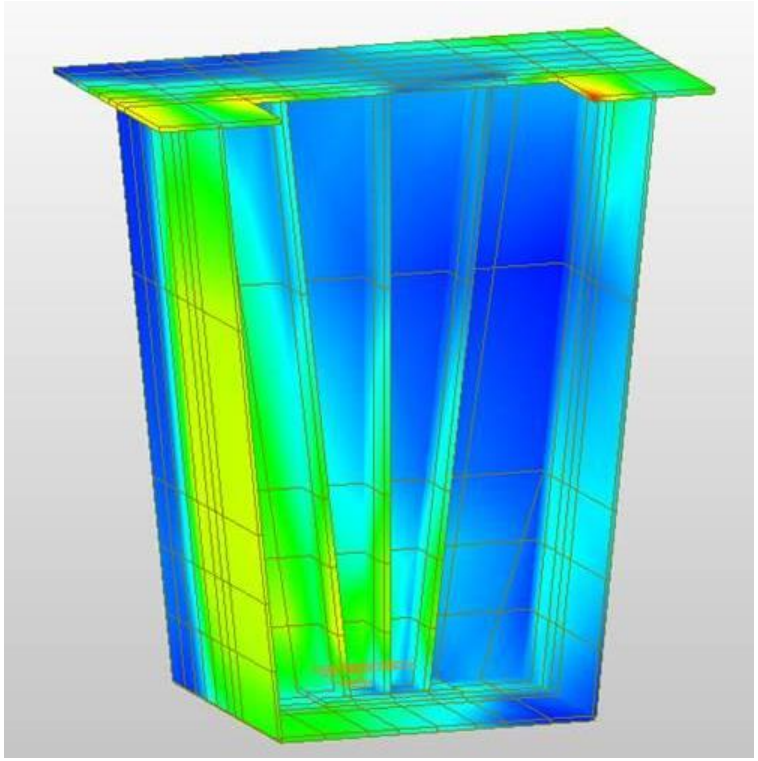

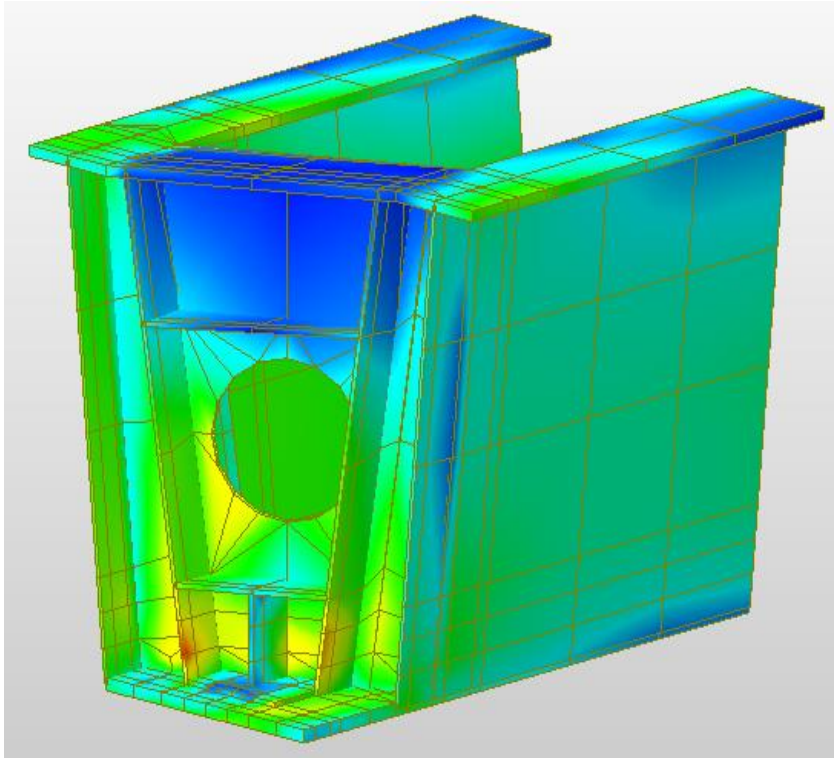

Local MIDAS Civil FE Plate Model for Diaphragms

New Bridges | Pascoe vale Rd Bridge over Western Link

Construction Challenges

- Complex site required close co-ordination between design and construction teams:
  - Construction sequence
  - Crane positioning in constrained site critical
    - Steel splice locations
    - Maximum lifting weights
  - Temporary towers
  - All major girder lifts to be completed under night road and rail closures

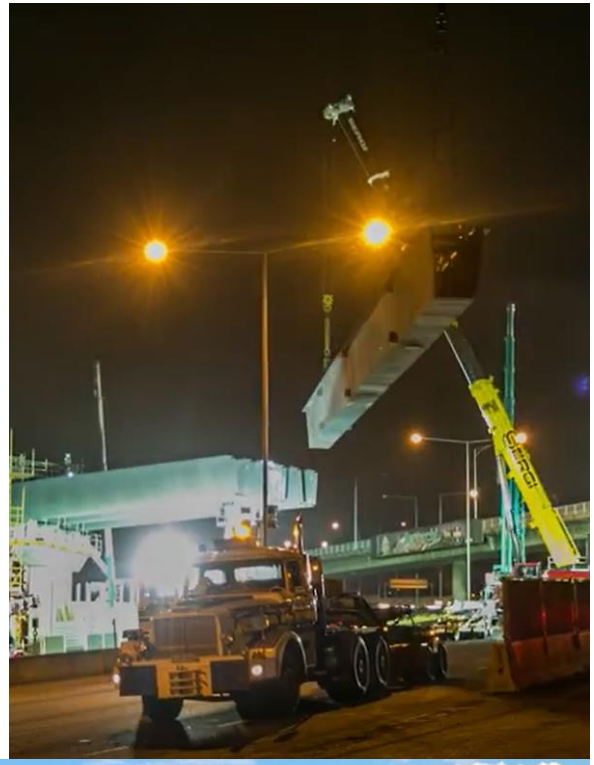

New Bridges | Mt Alexander Road over Moonee Ponds Creek

Major Constraints

- Close proximity to the existing bridge
- Requires partial removal of the existing north east approach embankment
- New bridge piers/columns are to line up with existing
- Soffit level to be no lower than existing
- Pedestrian Path under below 1 in 10 ARI

New Bridges | Mt Alexander Road over Moonee Ponds Creek

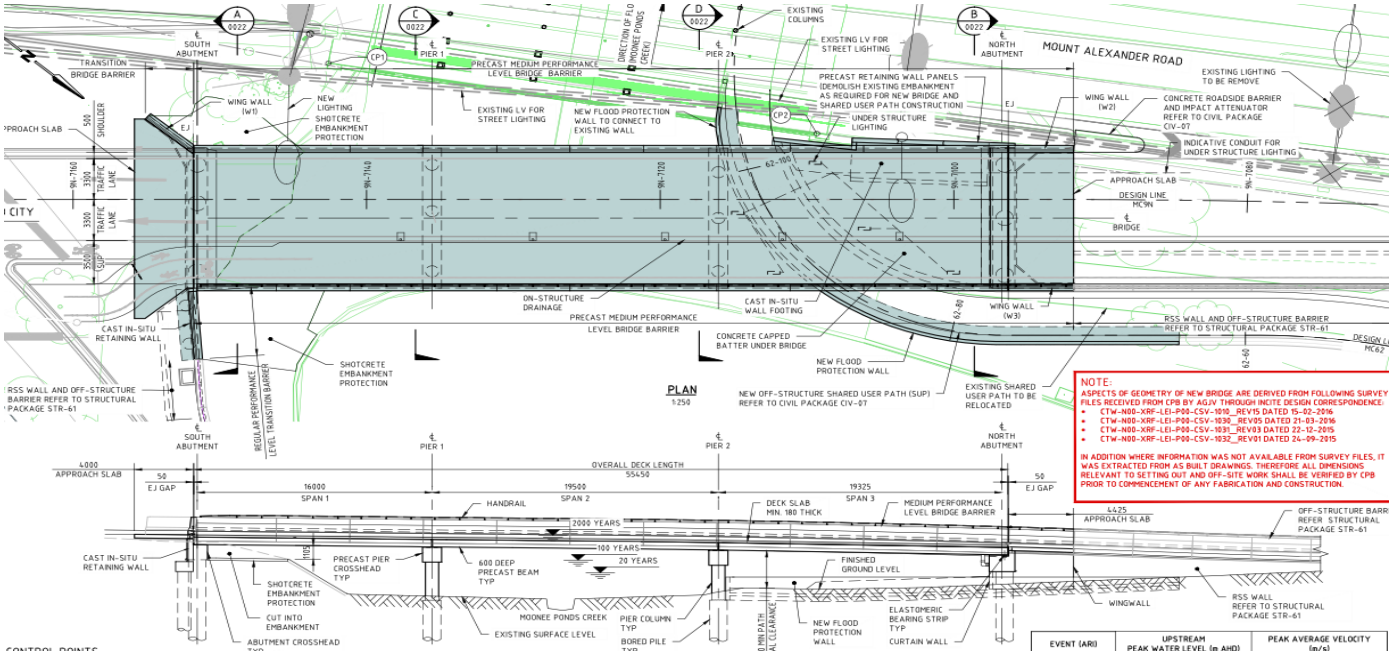

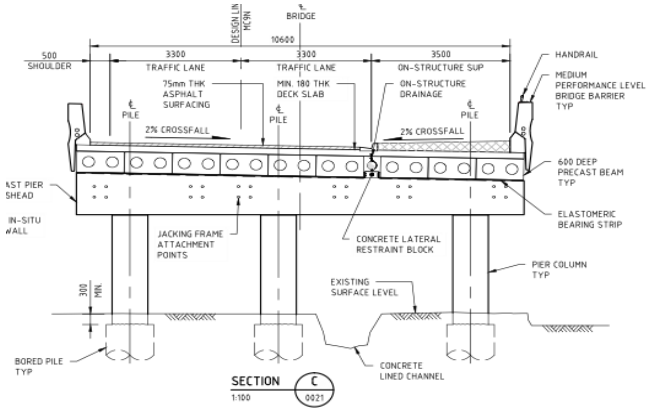

New Bridges | Mt Alexander Road over Moonee Ponds Creek

Existing Bridges Widening | Western Link Bridge over Pascoe Vale Road

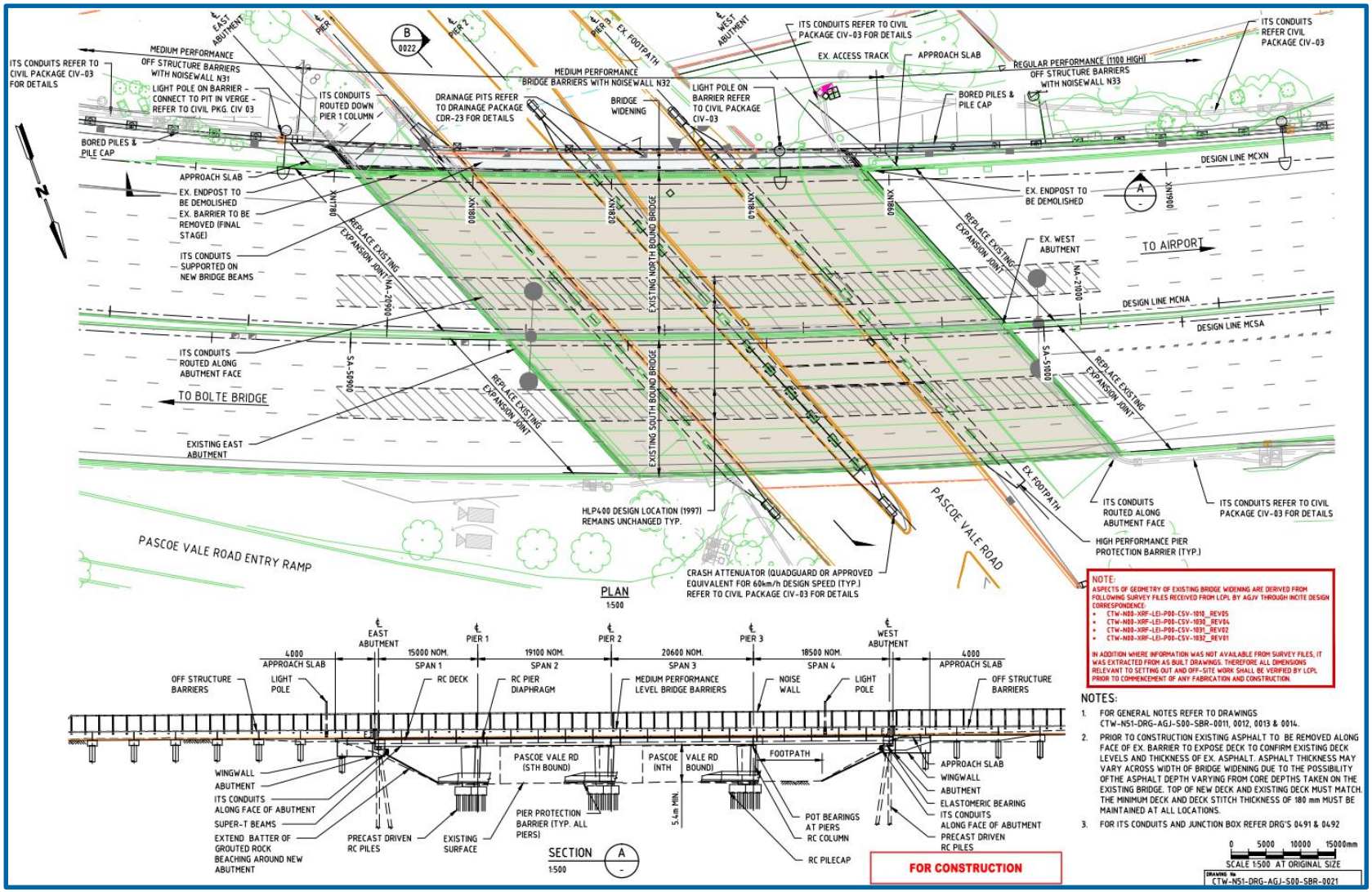

Existing Bridges Widening | Western Link Bridge over Pascoe Vale Road

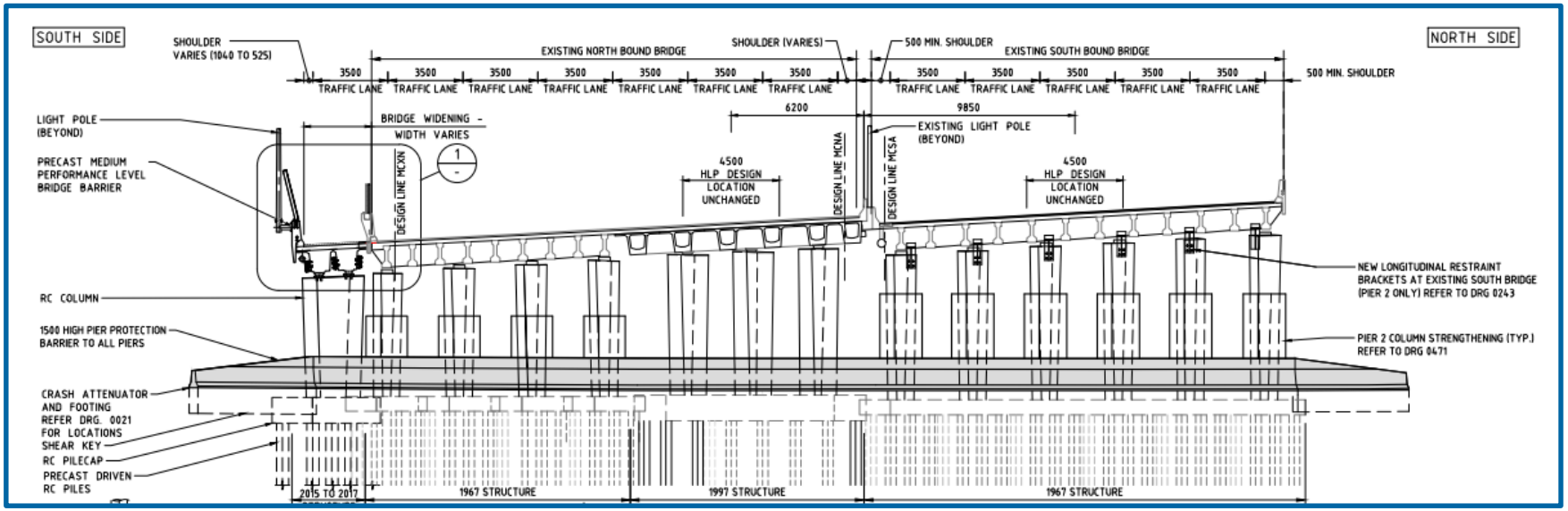

- Live running traffic on CityLink north and southbound lanes
- The existing noise wall is also to be retained during construction
- Depth of structure to achieve existing clearance to Pascoe Vale Rd.
- Pier strengthening works require
- Existing underground utilities in close proximity to or running below new substructure
- Driven piles will require pre boring to minimise vibration effects on gas main

Existing Bridges Widening| Western Link Bridge over Pascoe Vale Road

Existing Bridges Widening | Western Link Bridge over Pascoe Vale Road

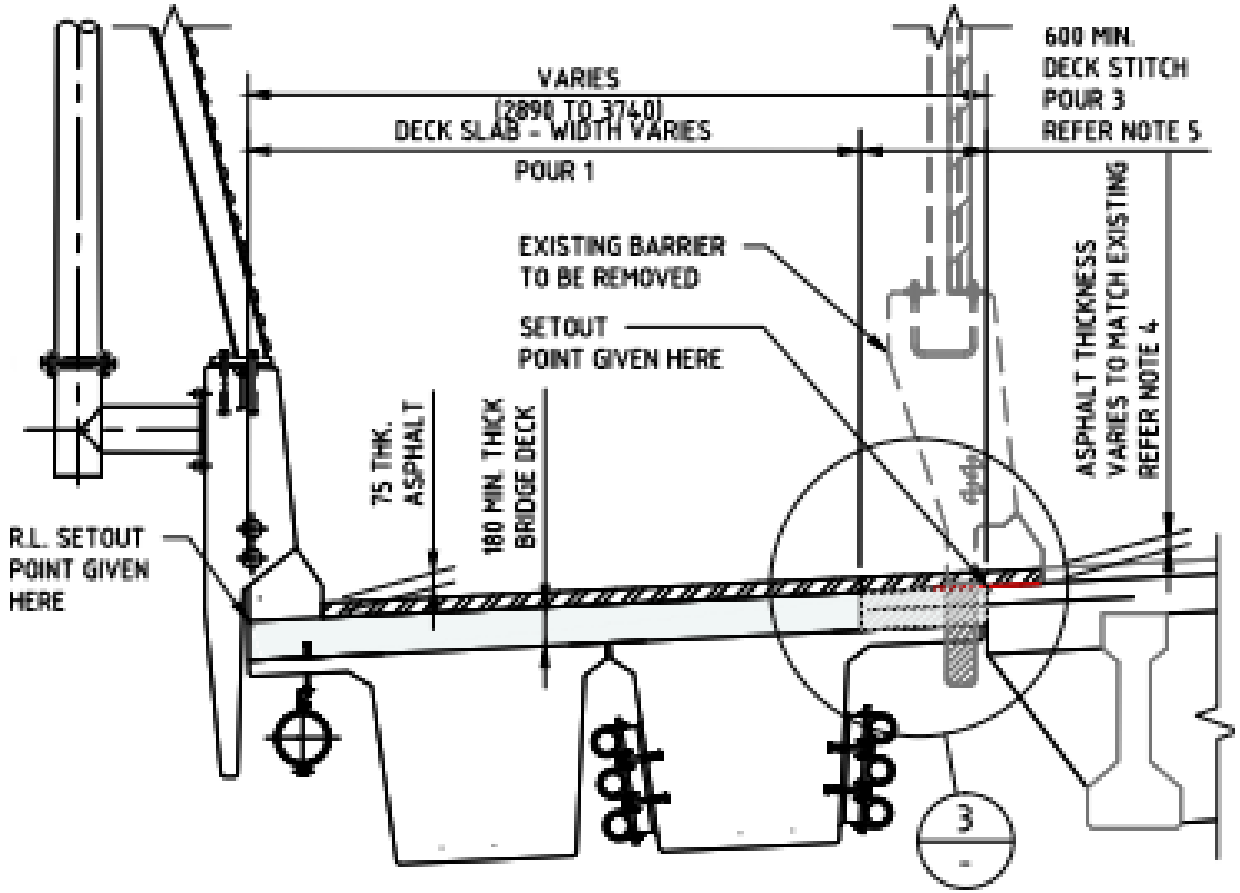

- Deck Cast in 2 stage
- Partial Road Closure
- Limit of Deflection and Vibration during deck casting
- High strength Low shrink low slump concrete for stitch

Existing Bridges Widening| Ramp Z-Southbound Ramp Bolte to Power St.

Existing Bridges Widening | Ramp Z-Southbound Ramp Bolte to Power St.

- Existing ramp constructed in 2009/2010
- 420 m of elevated structure in 14 spans
- Existing Pier 9 Crosshead spans over West Gate Freeway

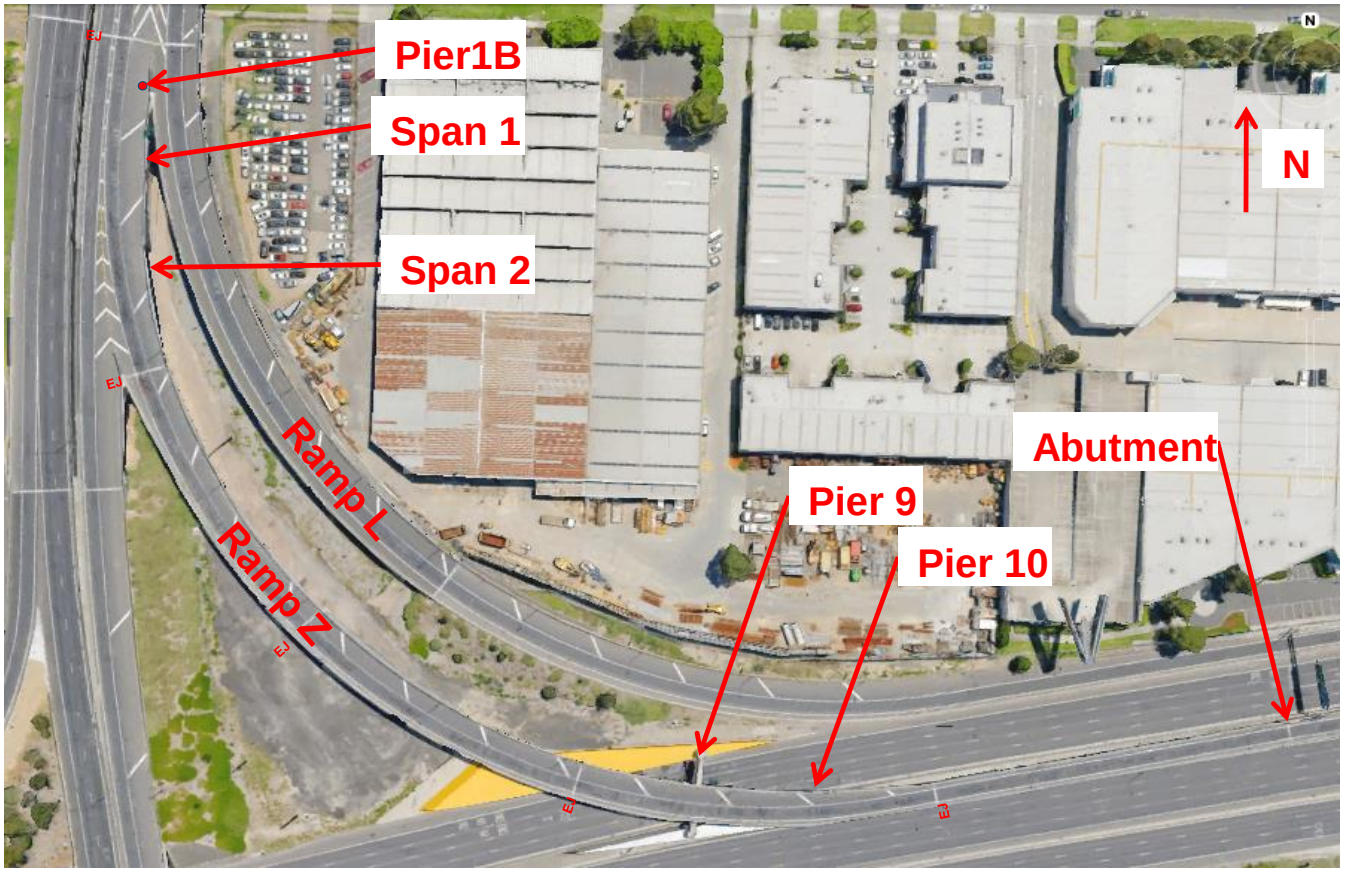

Image: Google Earth

Existing Bridges Widening | Ramp Z-Southbound Ramp Bolte to Power St.

- Existing Span 1 and 2 are 42m long 2.3m deep composite steel I-Girders, connected to existing CityLink segmental concrete box girders
- Existing Span 3 to 14 Super-T beams are 26-32m long

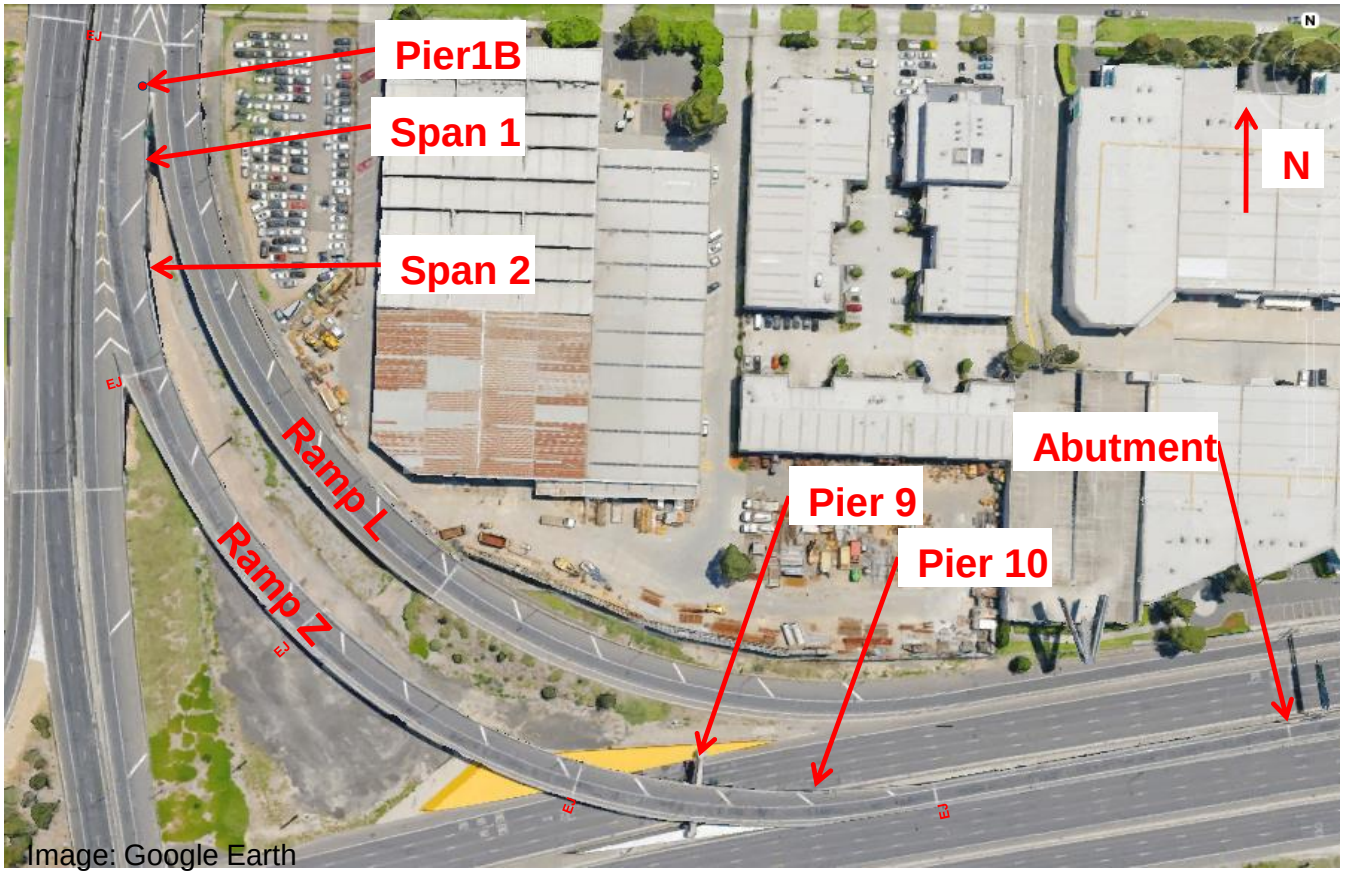

Image: Google Earth

Existing Bridges Widening| Ramp Z-Southbound Ramp Bolte to Power St.

Design Challenges - Span 1 Widening

- Risk of additional load transferred to Ramp L due to Span 1 widening
- No reserved capacity for Ramp L
- Avoid deck strengthening due to location of first pier

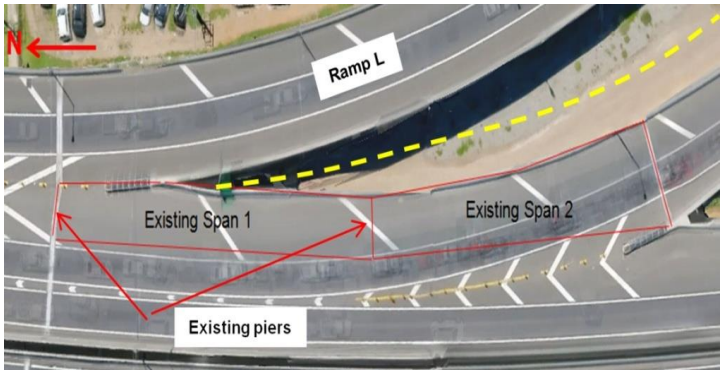

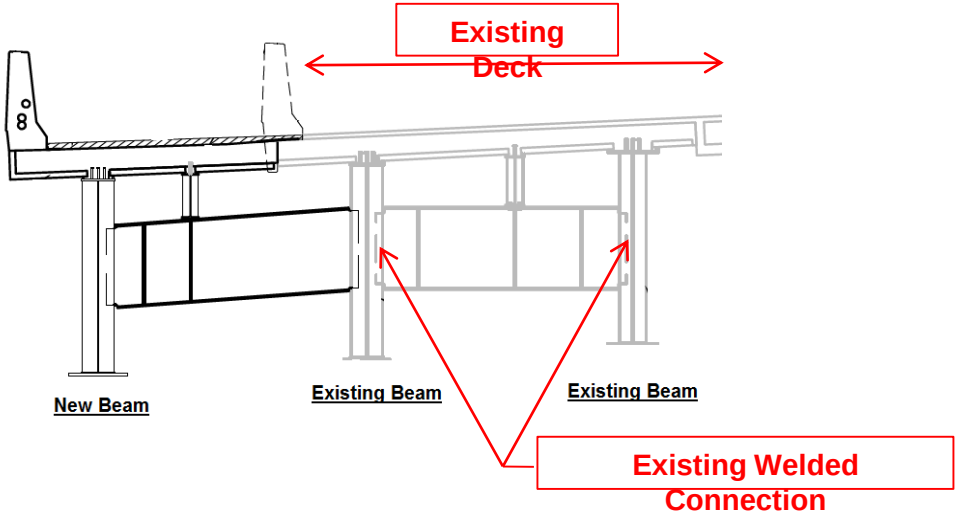

Design Solution - Span 1 Widening

- Pier location selected to maintain an optimized stiffness of girder
- Flexible enough to allow deflection of deck at start of widening and hence no need for deck strengthening
- Stiff enough to eliminate additional load transfer to Ramp L
- Girder extended under the existing deck, made non-composite for 25% of its length
- Pier1B located under existing deck at 1/3 span

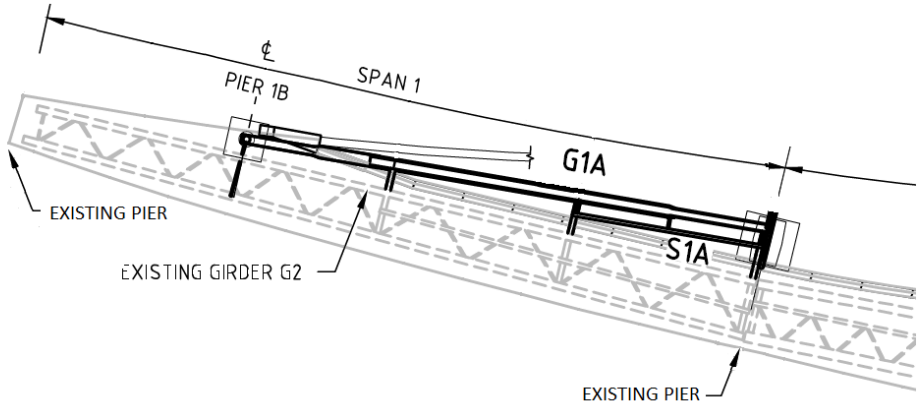

Span 1 Plan

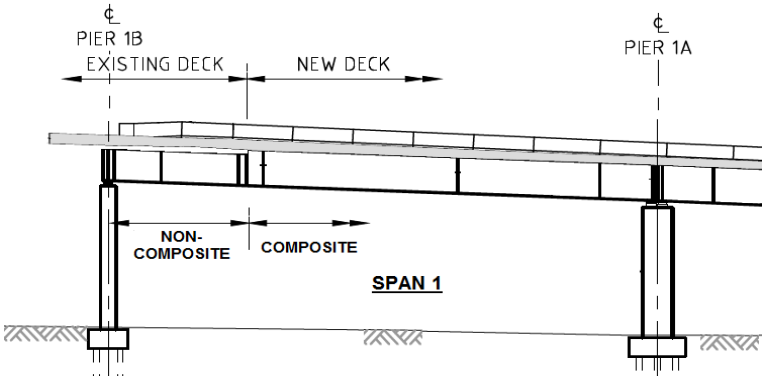

Span 1 Elevation

Design Challenges - Span 2 Widening

- Two steel I-girders connected to the existing
- Kinked in plan to suit the curved geometry
- Excessive twist of girders under girder and deck SW
- Unbalanced reactions of girders

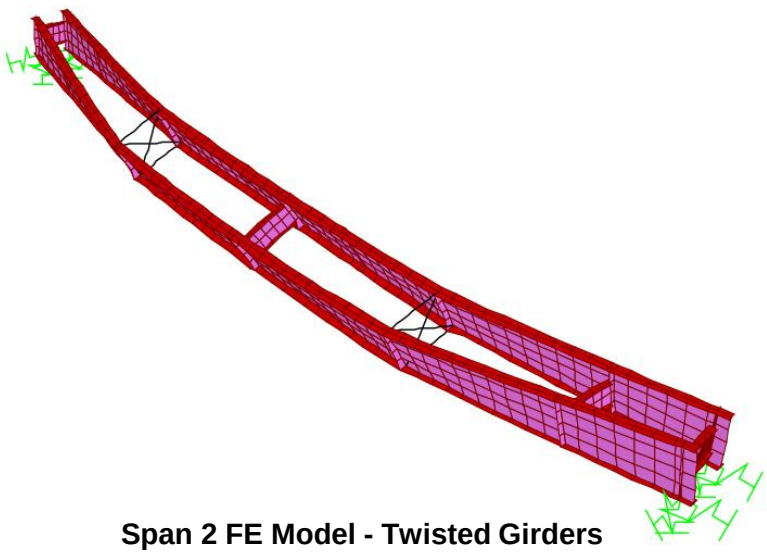

Span 2 FE Model - Twisted Girders (SAP2000)

Design Solution - Span 2 Widening

- Both girders are required to be assemble together on site
- Torsional restraint provided by pair of cross bracings at the ‘kinked’ points
- Supported on a temporary tower at mid-span till composite action achieved
- Minimized the amount of permanent twist

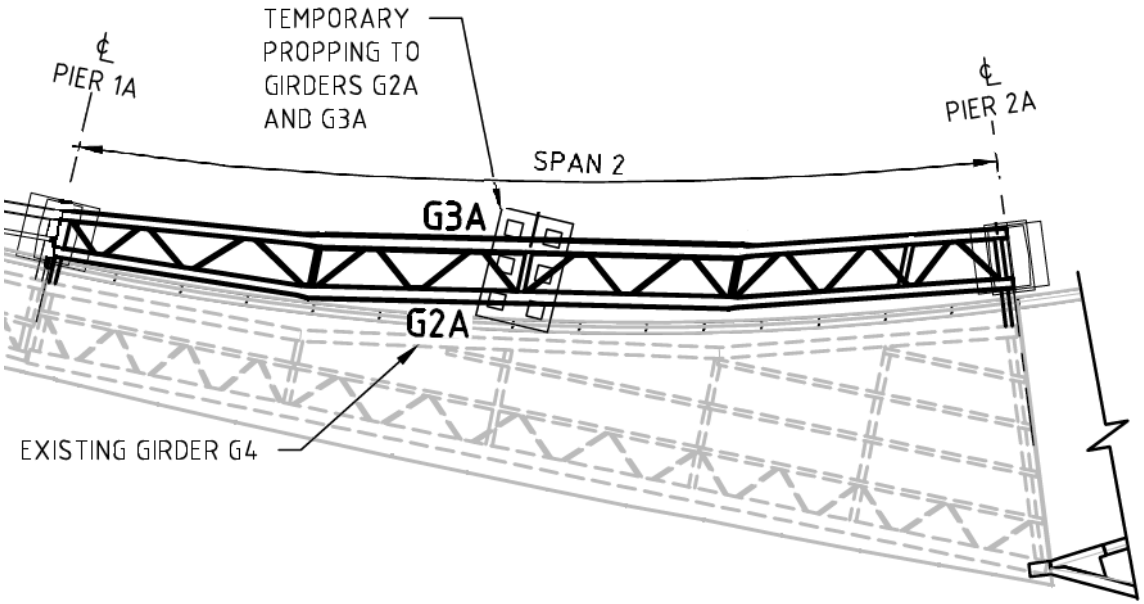

Span 2 Plan

Design Challenges – Pier 9 Crosshead

- Existing crosshead is a precast post-tensioned beam
- Existing Super-T beams are supported on a concrete corbel
- Crosshead was not designed for future widening
- Assessment showed that crosshead suspension reinforcement is not adequate for the new beam loads
- Anchoring into crosshead was also impossible due to presence of post-tensioning
- Extending existing concrete corbel was not a solution

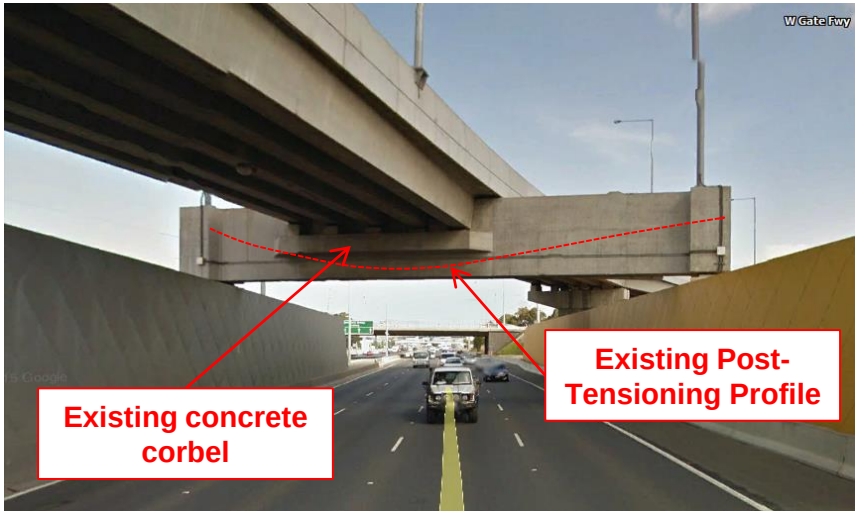

Design Solution – Pier 9 Crosshead

- Steel fabricated saddle with 100mm thick top plates
- Transfer loads from bearings to top of crosshead
- All components checked for fatigue
- Simple structural form and ease of installation achieved

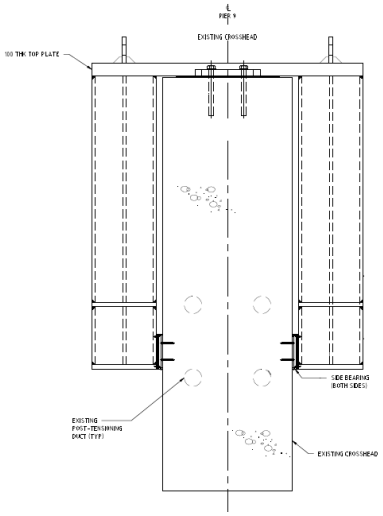

Side View

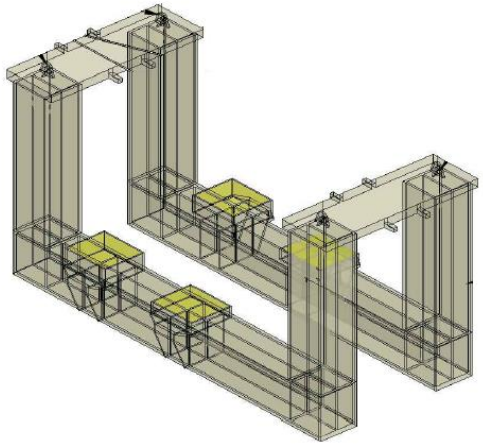

Existing Bridges Widening | Ramp Z-Southbound Ramp Bolte to Power St.

Pier 10 Crosshead

Design Challenges

- Limited structural depth available
- Casting crosshead over live traffic
- Possible West Gate Freeway traffic disruption

Design Solution

- Independent new concrete column
- Two fabricated steel I-girders cantilever over the West Gate Freeway
- Crosshead held to the top of the new column by cast-in stress bars
- Shallow structural depth achieved
- Easy installation

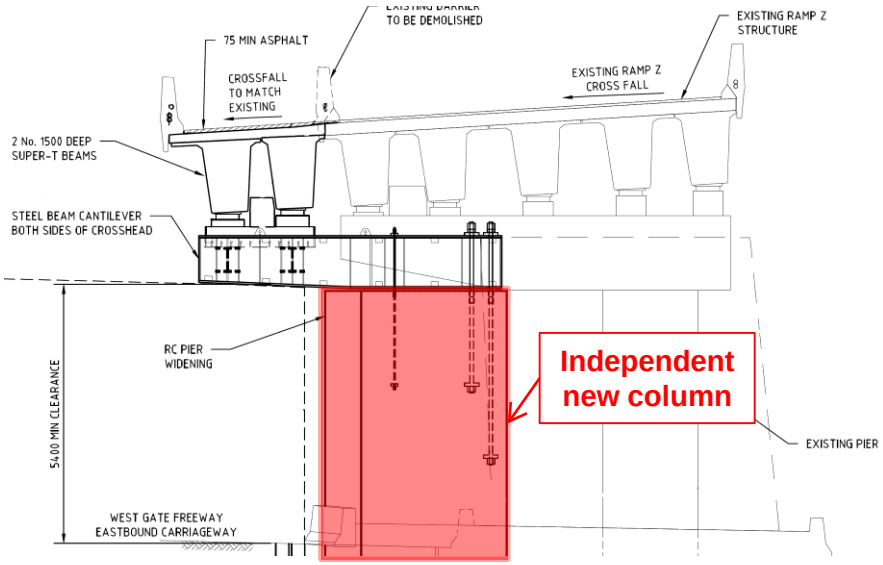

Existing Bridges Widening | Westgate Freeway Eastbound Elevated Structure

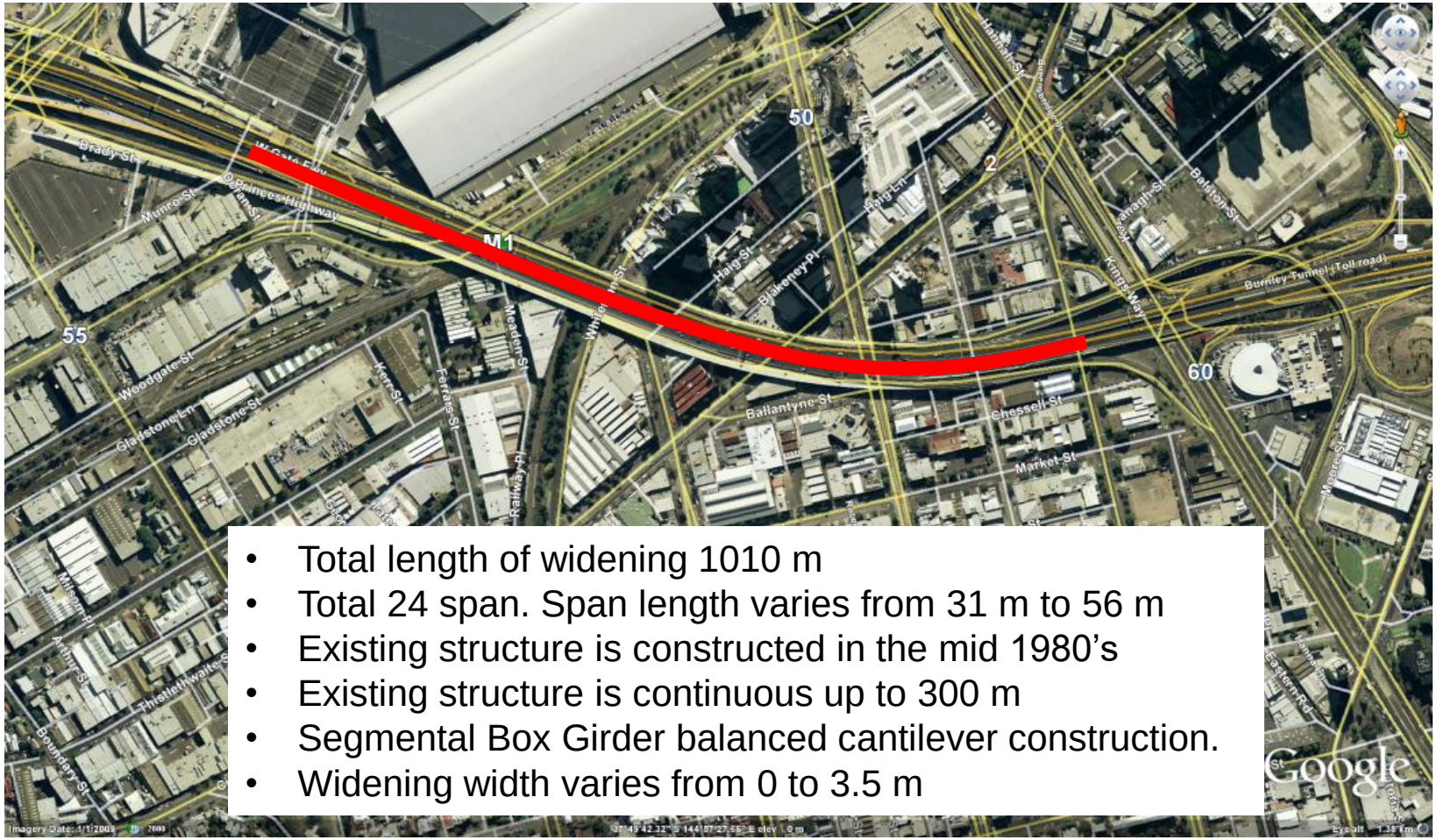

- Total length of widening 1010 m
- Total 24 span. Span length varies from 31 m to 56 m
- Existing structure is constructed in the mid 1980's
- Existing structure is continuous up to 300 m
- Segmental Box Girder balanced cantilever construction.
- Widening width varies from 0 to 3.5 m

Design Constraints

- The widening work is to be constructed adjacent to live traffic
- The widening work crosses a number of existing access roads and tram routes
- Existing 3.8 m x 3.8 m Melbourne Water storm water drain close to pier.
- Low piling headroom under existing Deck
- Piling adjacent and close proximity to existing Westgate Elevated Structure substructures

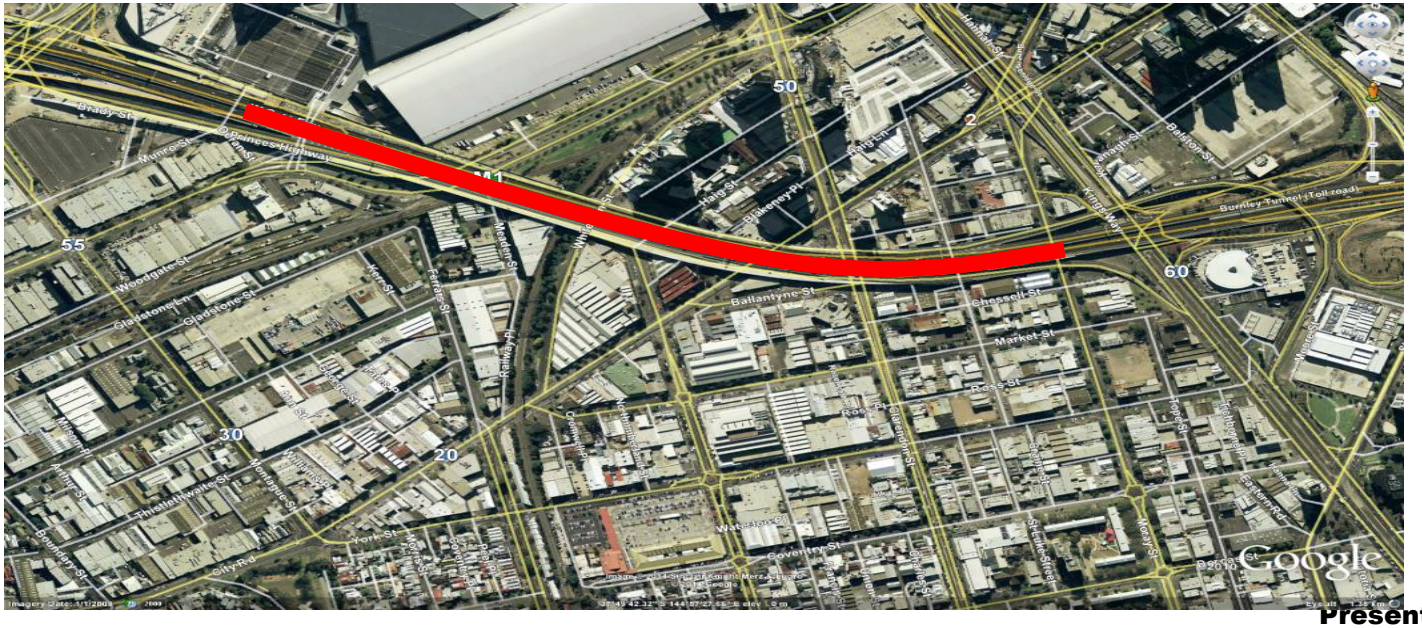

Design Solutions - Superstructure

- For Widening up to 0.8 m

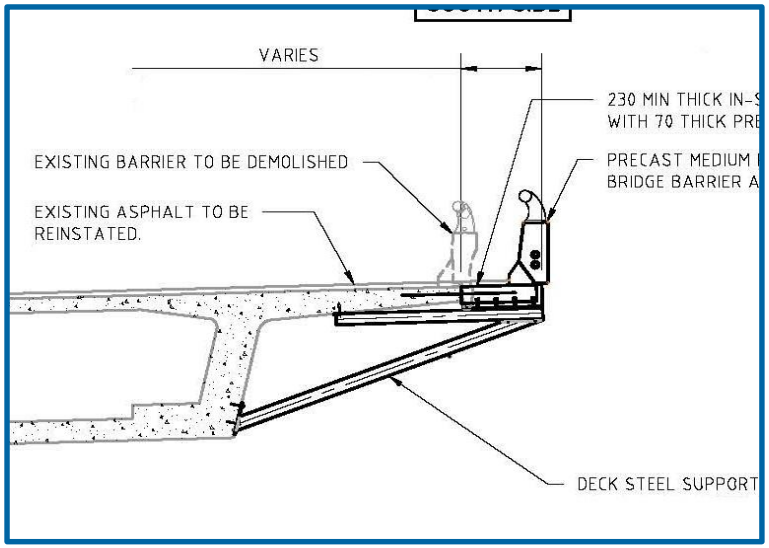

Design Solutions - Superstructure

- For Widening up from 0.8 m to 2.4 m

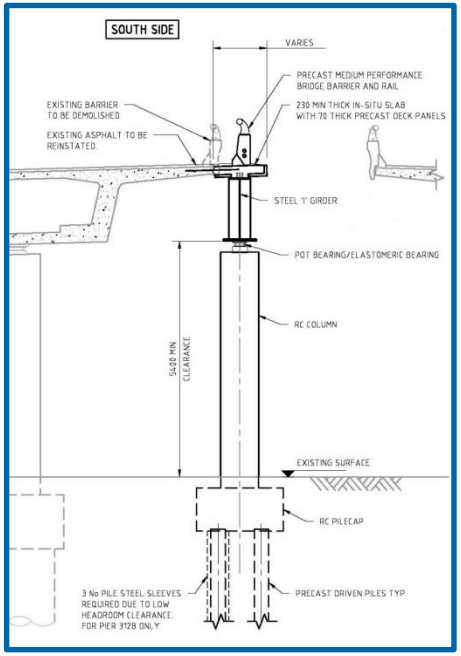

Design Solutions - Superstructure

- For Widening up from 2.4 m to 3.2 m

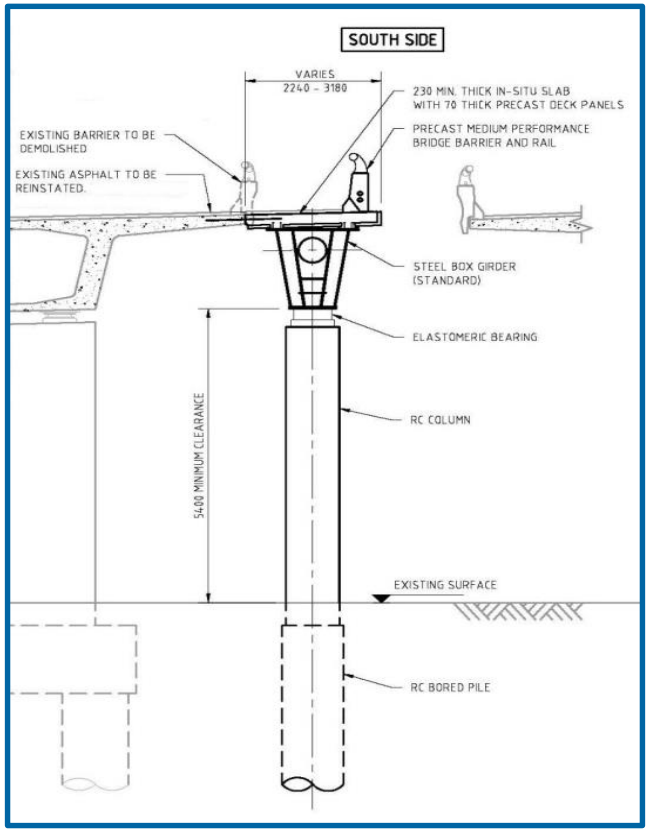

Design Solutions - Superstructure

- Transition from I Girder to Box Girder

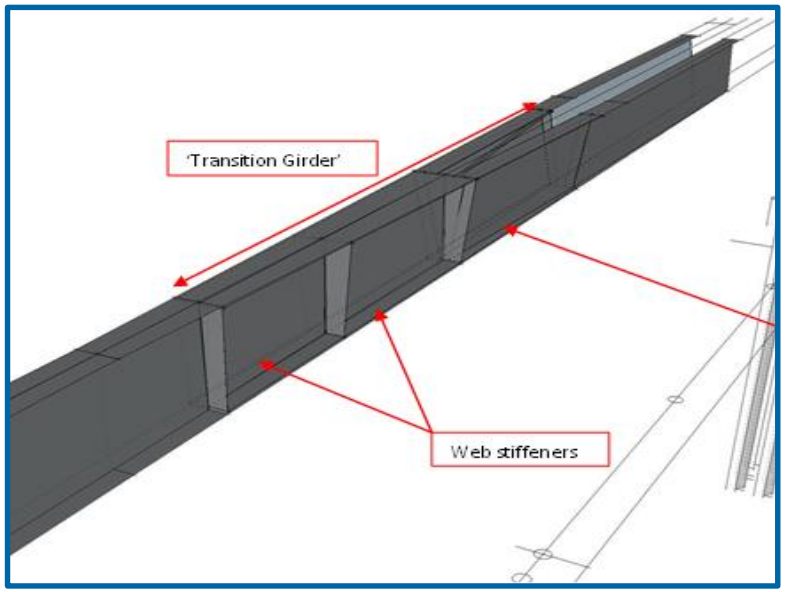

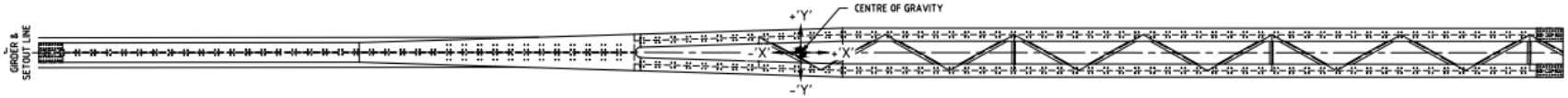

Design Solutions - Substructure

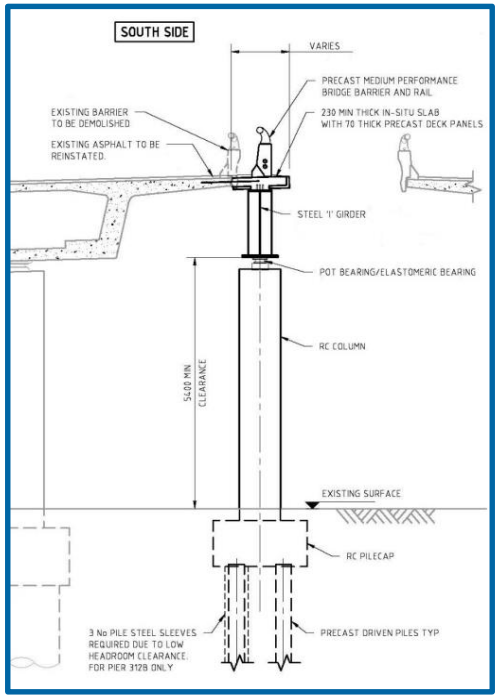

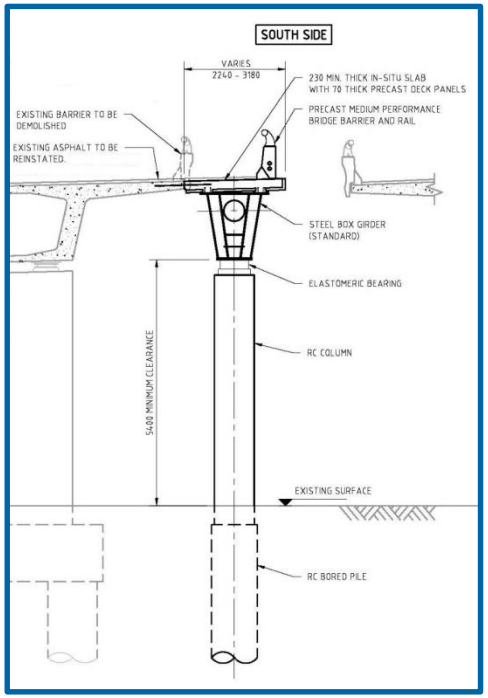

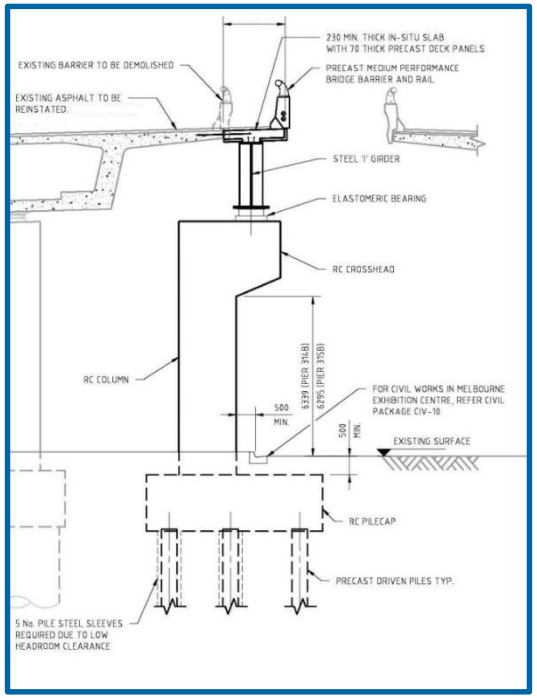

Design Solutions - Substructure

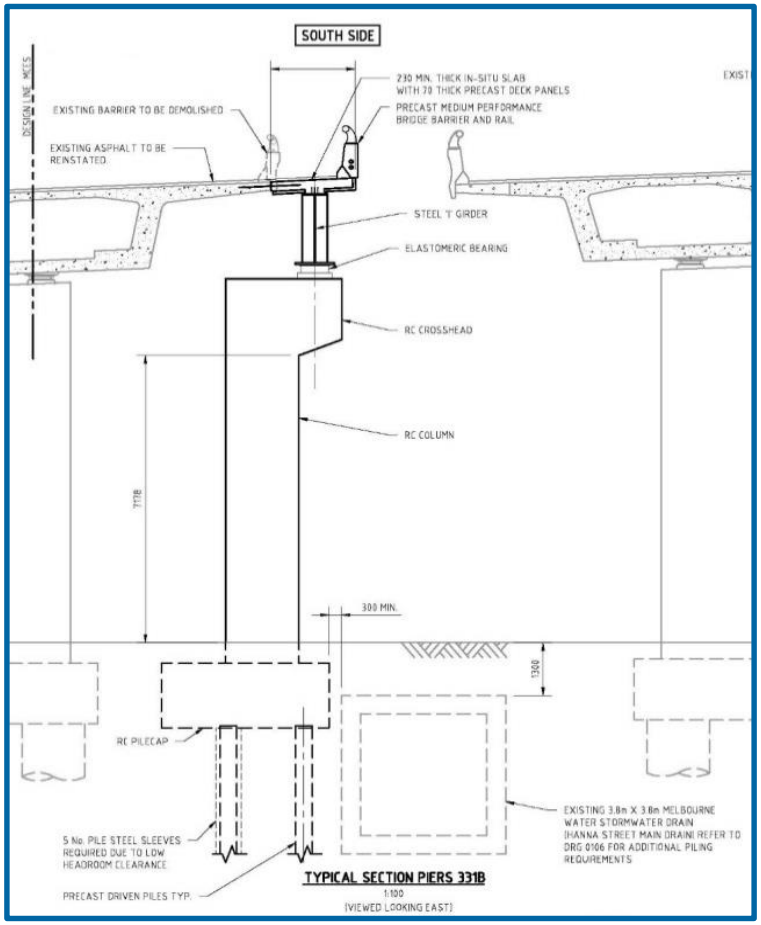

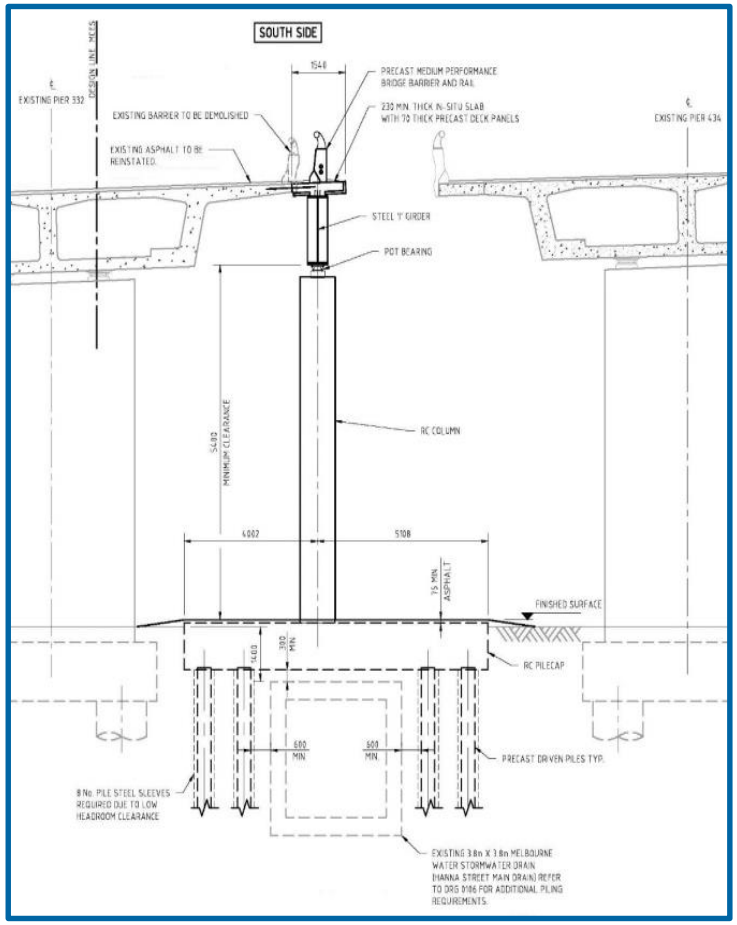

Design Solutions - Articulation

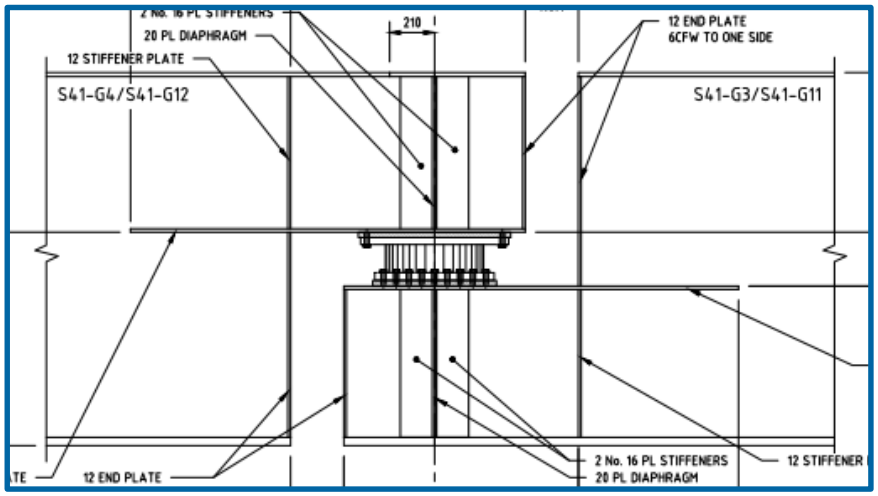

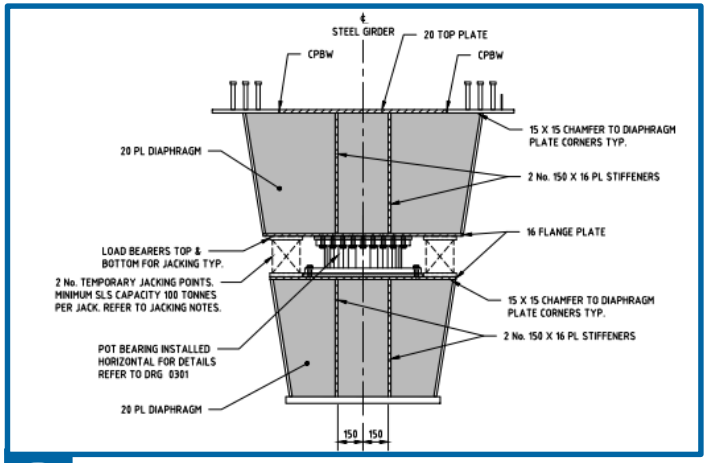

Conclusions

- An excellent example of fitting new works within a busy existing road corridor
- Design decisions were heavily influenced by the need to accommodate the existing traffic and associated highway works, and to suit construction staging under operating live traffic
- Major bridgeworks successfully completed and Road open for traffic months ahead
- Close co-ordination with design and construction teams was critical for successful completion

Acknowledgments and Questions

- Acknowledgments
  - CPB Contractors
  - Transurban
  - VicRoads
  - Douglas Partners
  - Hassell
- Thank you for listening

www.ghd.com

citylinktullawidening.vic.gov.au