sharing knowledge

USE OF DIPP PILES FOR A NEW SUP BRIDGE IN WEST MELBOURNE

Michael Wei, Jawad Zeerak & David Barton

8th Australian Small Bridges Conference: 27-28th November 2017
Gold Coast, Australia

EIC ACTIVITIES

SMEC

vicroads

Fulton Hogan

PILE DESIGN SOLUTIONS

A MEMBER OF THE CIMIC GROUP CIMIC

EIC ACTIVITIES PTY LTD

- EIC Activities is CIMIC Group's engineering and technical services business.
- The EIC name stands for **Engineering, Innovation** and **Capability**.
- EIC Activities provides engineering and technical services to the following CIMIC companies

Contents of the presentation

1.0 PROJECT OVERVIEW

EIC ACTIVITIES

Project Location

- The project is located approx. 5km to the west of Melbourne CBD
- The new SUP Bridge is constructed over the Maribyrnong River

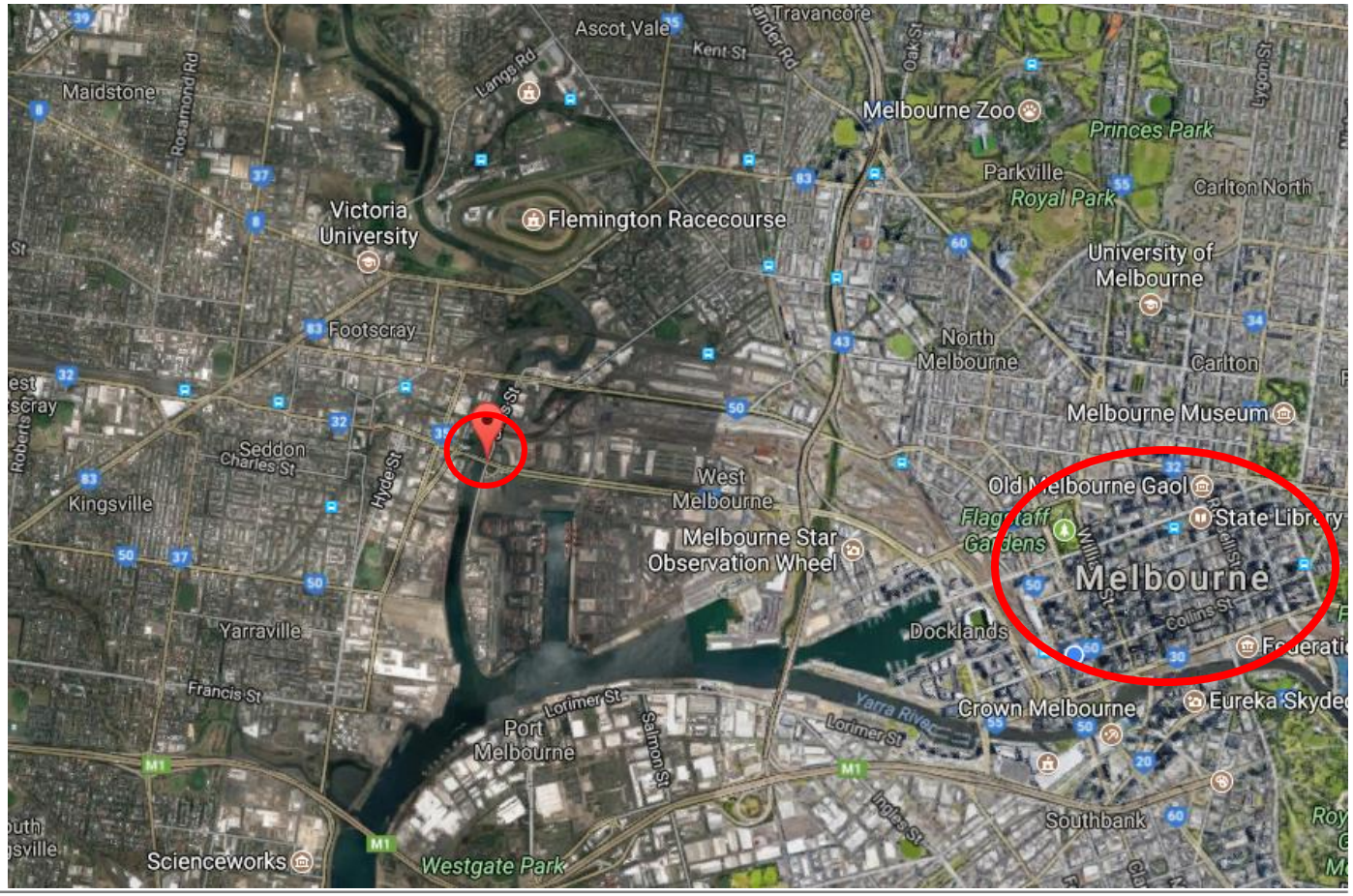

Project Overview

- The new SUP Bridge was constructed over the Maribyrnong River to improve the amenity for cyclists
- It replaces the existing SUP on the adjacent Shepherd's Bridge
- Existing SUP on the Shepherd Bridge was removed, Shepherded Bridge was widened and strengthened to support the increased freight movement to the port of Melbourne as part of West Gate Distributor – Stage 1 project.
- The river crossing is one of the busiest cycle routes around the Melbourne

The New SUP Bridge

- The bridge is 3 span, 190m long and 4.5m wide
- Supported on two abutments (east & west) and two piers (east & west)

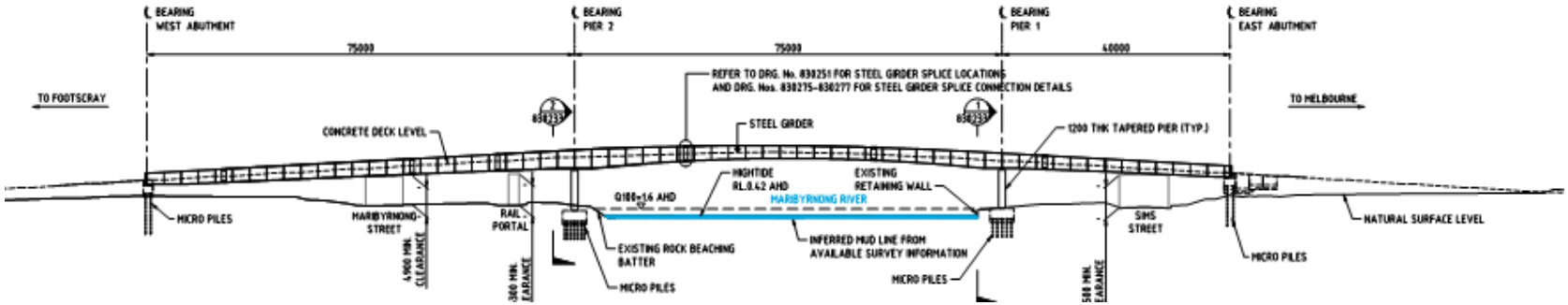

2.0 GEOTECHNICAL CONDITIONS

EIC ACTIVITIES

Geotechnical Conditions

- The bridge is located in the Yarra Delta region of Melbourne

- The major geological units included;

  - Fill
  - Coode Island Silt (CIS)
  - Fishermens Bend Silt (FBS)
  - Newer Volcanics Basalt

Geotechnical Conditions…cont'd

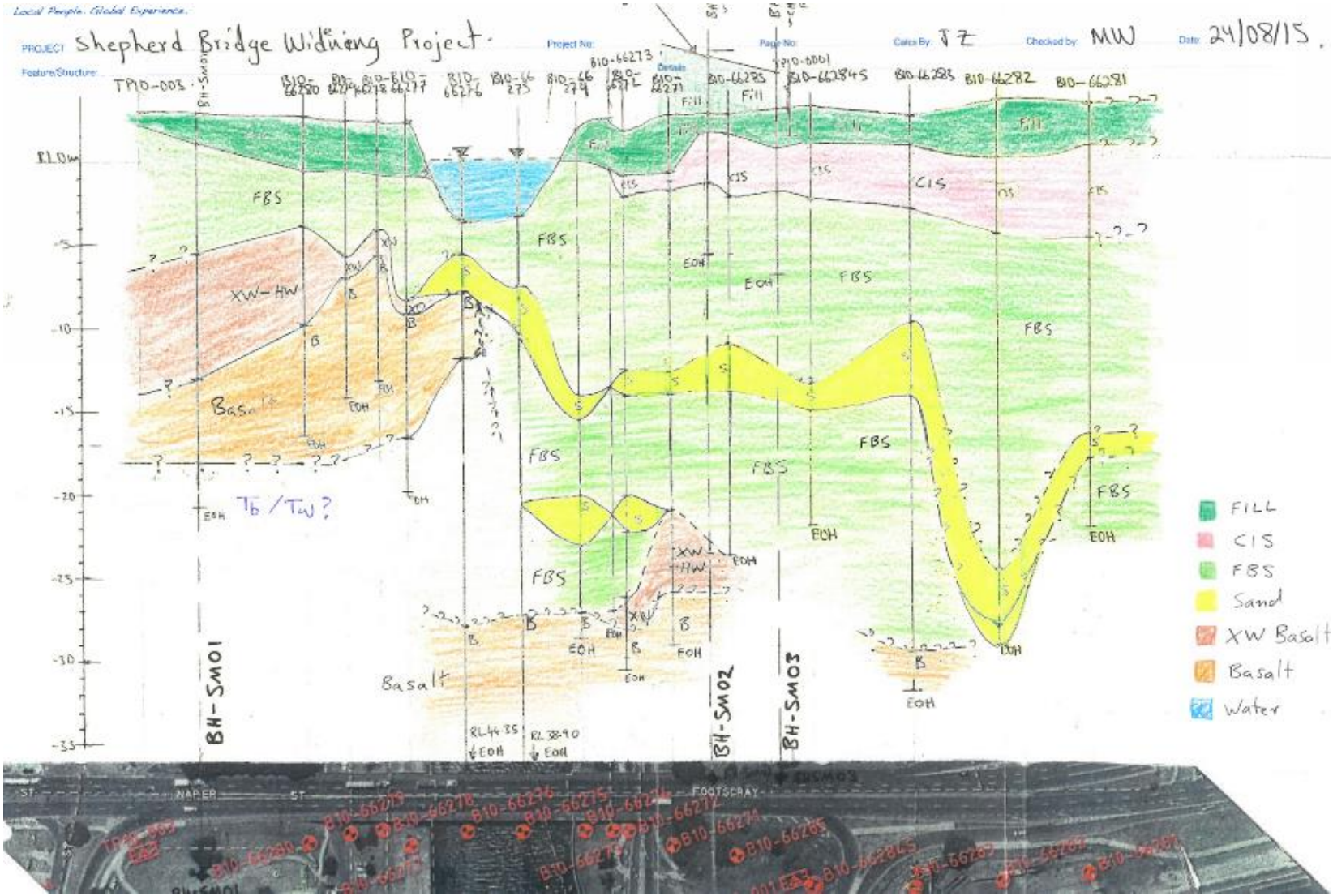

3.0 DUCTILE IRON PIPE PILES (DIPPS)

EIC ACTIVITIES

Ductile Iron Pipe Piles (DIPPs)

- During the tender & preliminary design stages CFA piles were proposed to support the new SUP Bridge
- During later stages of the design DIPPs were adopted as alternative foundation piles for the following reasons;
  - Limited rig capacity to install over 30m long CFA piles
  - Site constraints (existing bridge) including presence of services
  - Light weight and more mobile installation equipment & less vibration
- DIPPs were for the first time used on a VicRoads project

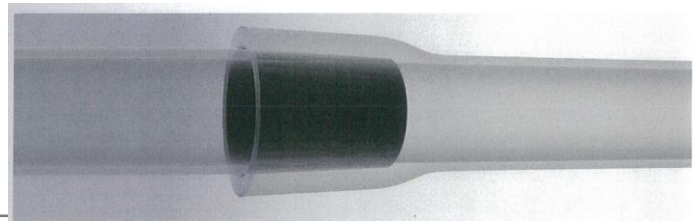

DIPPs Cont'd

- DIPPs are circular tube piles made of ductile cast iron
- 170mm dia piles with 9mm wall thickness
- 5m long sections installed using plug & drive
- 900MPa compressive strength and 420MPa tensile strength
- Load of up to 2400kN
- The piles are filled with 50MPa concrete
- 5m long 100 UC sections inserted for the top section
- High corrosion resistant than steel
- Low vibration (<= 2mm/sec)
- Can be installed 400mm from existing buildings
- Driven using standard 25-30t excavator mounted with hydraulic hammer

DIPPs Cont'd 2

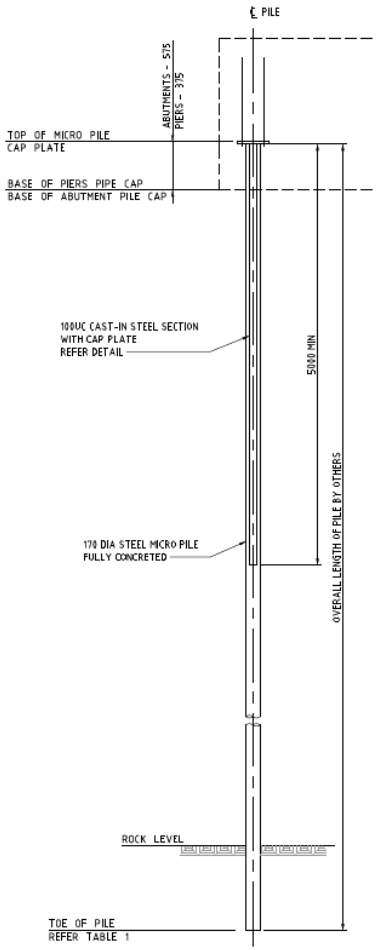

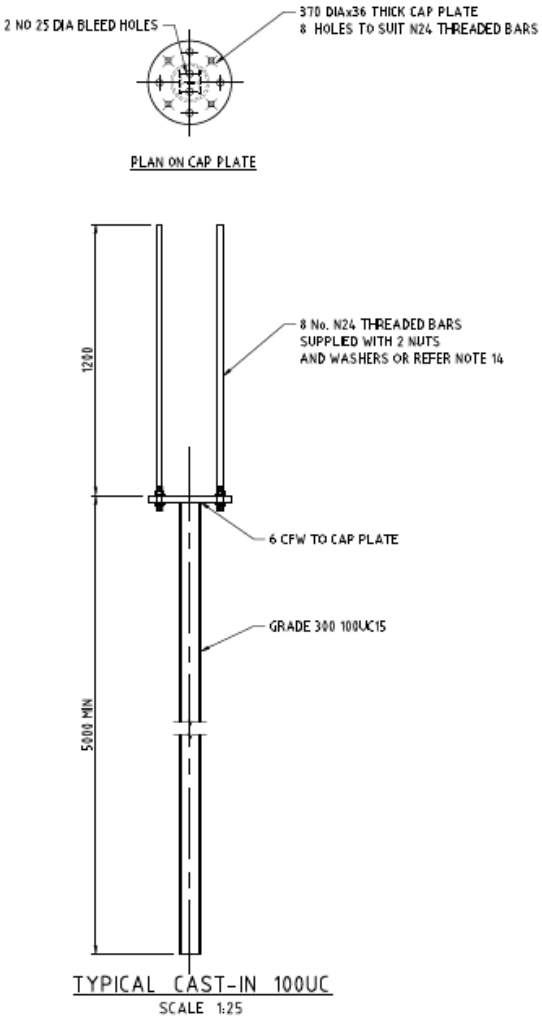

Pile driving video

DIPPs Cont'd 2

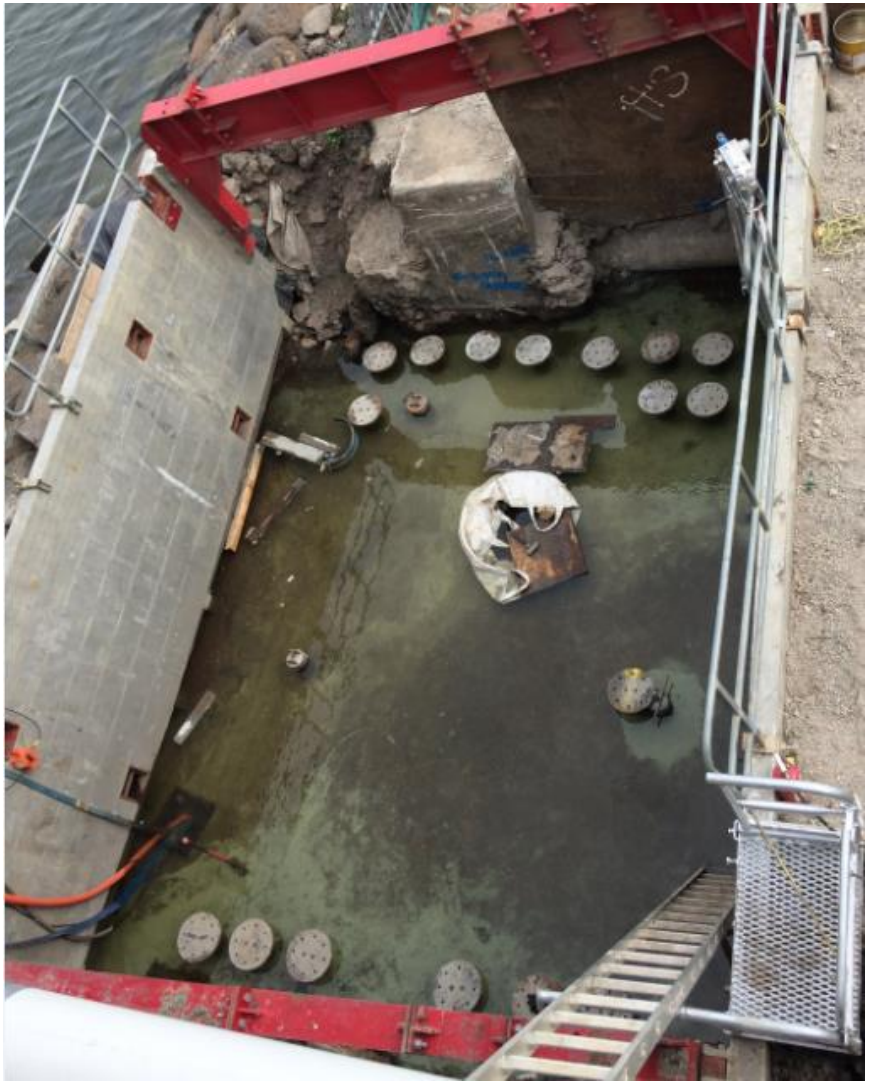

4.0 PILE DESIGN & PILE GROUP ANALYSIS

EIC ACTIVITIES

Foundation Layout

- The DIPPs were arranged in the following groups;
- **Abutments**
  - 8 piles (two groups of 4)
- **East Pier**
  - 12 Piles (Two rows of 5 piles with an additional two piles)
- **West Pier**
  - 19 Piles

  - Due to presence of services & eccentric loading, west pier was arranged in the above manner .

Foundation layout

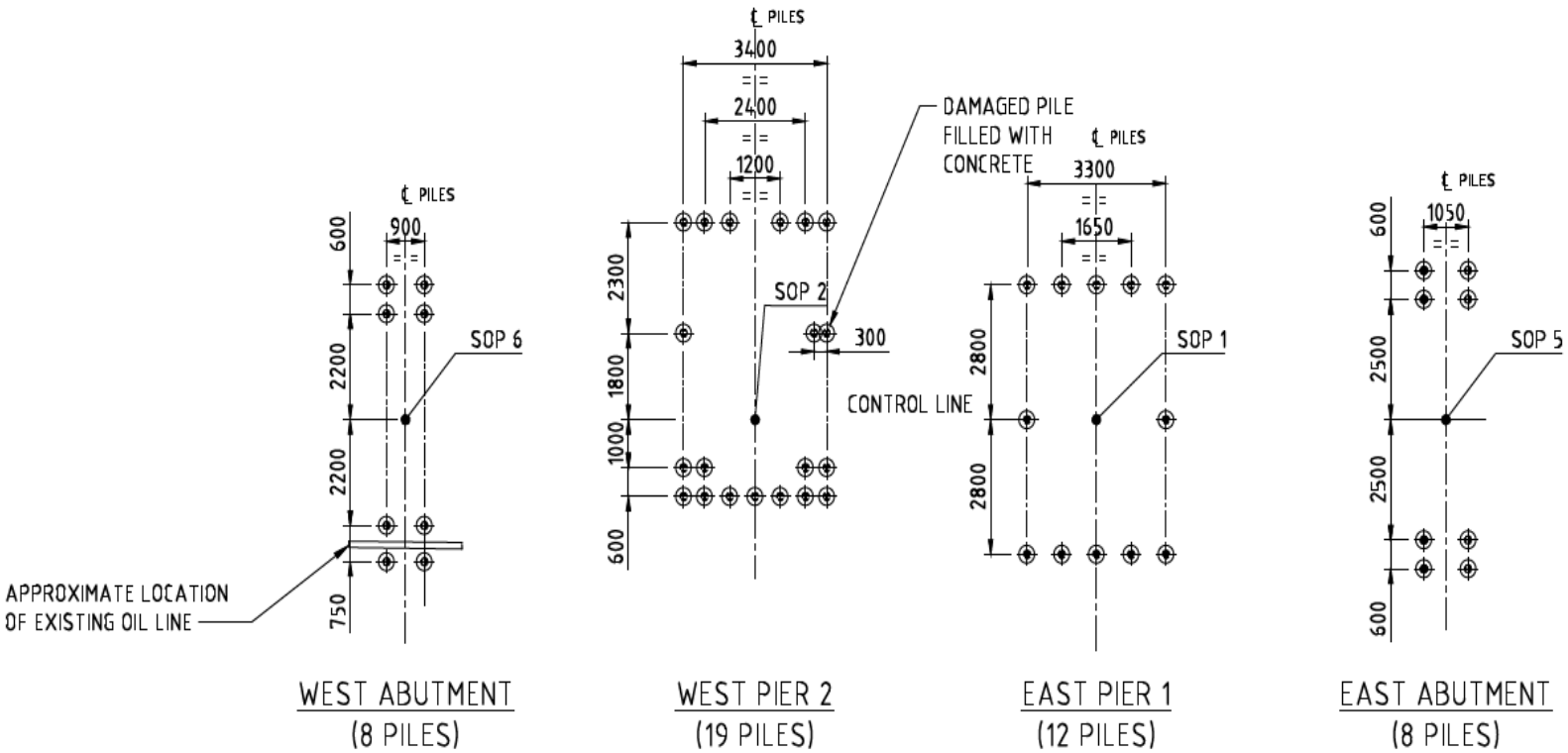

Pile Group Analysis

- Original design proposed 900dia CFA piles,
- Detailed design adopted 170mm dia DIPPs
- DIPPs are long and slender
- Concerns associated with lateral capacity of DIPPs
- The lateral loads were mainly due to wind and earthquake
- It was crucial that an accurate assessment of the lateral loads was undertaken

- Pile groups were analysed using the following two methods;
  - PIGLET
  - PLAXIS 3D

Pile Loads

- Two load cases were analysed

Load Case	Vertical Load (kN)	Horizontal Load (kN)	Moment (kN-m)
1	8390	0	0
2	6015	500	4100

- Case 1 governed vertical load case while case 2 governed lateral load cases

PIGLET

- PIGLET is a spreadsheet based program
- Relatively easy to use and quick answer
- Limitation of PIGLET e.g. one single soil layer, soil strength cannot be modelled
- Due to ease of use and quick results, PIGLET is still commonly used

- The following soil parameters were used in the PIGLET analysis

Soil Parameters				Pile Properties		
Shear Modulus (kPa)	Shear Modulus Gradient (kPa/m)	Shear Modulus Below Base (kPa)	Poisson's Ratio	Pile Diameter (mm)	Yung's Modulus (kPa)	
2,310	500	38,000	0.3	170	5.1×10^7	

PLAXIS 3D

- PLAXIS 3D is a 3D FEA package
- Used for deformation and stability analysis
- In PLAXIS 3D, the 170 dia DIPP piles were modelled as ‘embedded beam’ elements
- Pile cap was modelled as linear elastic plate element
- The following geotechnical parameters were adopted in the analysis

Material/Layer	γ (kN/m3)	Cu (kPa)	C’ (kPa)	Φ’ (degree)	E ‘ (kPa)	v'	Ult. Skin Friction (kPa)
Fill	18	75	5	25	25,000	0.35	40
CIS	17	25	2	25	2,500	0.35	-
FBS Upper, stiff silty clay	18	75	5	26	25,000	0.35	40
FBS silty/clayey sand	19	-	3	28	30,000	0.3	50
FBS lower, very stiff silty clay	19	100	10	26	30,000	0.35	50
Basalt	26	-	50	33	100,000	0.2	600

PLAXIS 3D…Cont'd

- To following stages were included in the PLAXIS 3D analysis to simulate the construction sequence on site;
  - Generate initial stresses
  - Install piles
  - Excavate to the base of pile cap
  - Construct Pile cap
  - Apply bridge load

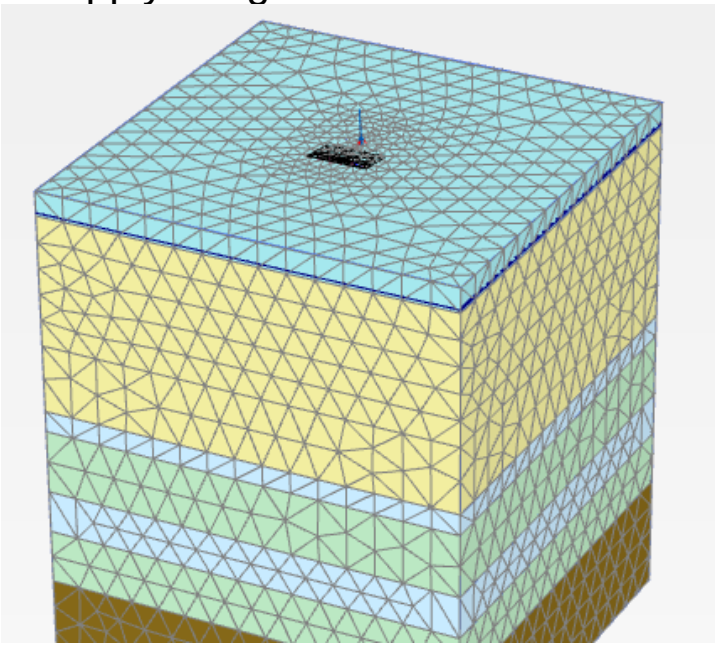

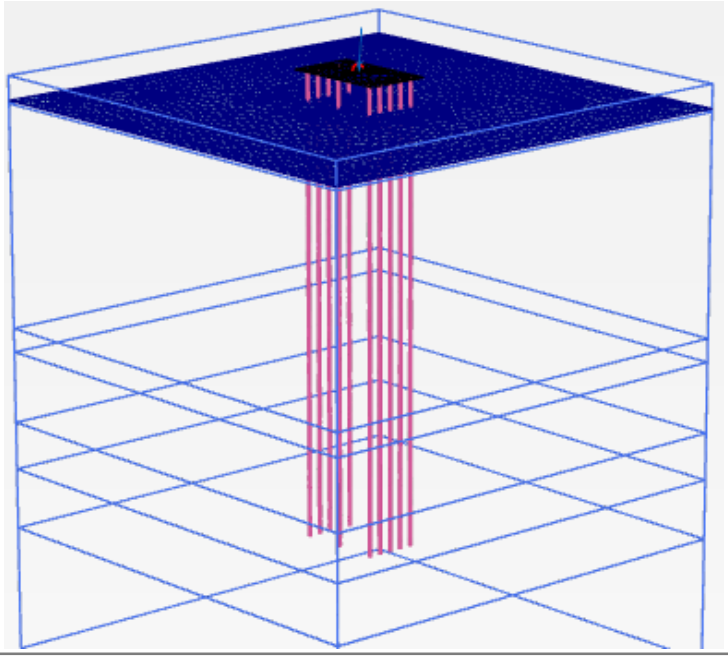

Pile Group Analyses Results (east pier)

Pile No	Axial Force (kN/pile)		Max Bending Moment (kN-m)		Pile Head Settlement (mm)	
	PIGLET	PLAXIS 3D	PIGLET	PLAXIS 3D	PIGLET	PLAXIS 3D
1	385	347	32	31	13	11
2	312	340	29	25	13	11
3	293	338	28	27	13	11
4	312	341	29	27	13	11
5	385	351	33	30	13	11
6	734	668	33	35	18	25
7	614	665	29	30	18	25
8	583	655	28	31	18	25
9	614	655	29	32	18	25
10	734	668	33	33	18	25
11	524	520	31	34	15	18
12	524	520	31	32	15	18

- Calculated pile actions and pile settlements from PIGLET & PLAXIS are generally in the similar range
- Pile head settlements under serviceability load conditions were well below the acceptance criteria

Pile deflection & moment – PLAXIS 3D

- Calculated bending moments were generally in the top 4m and dropped to virtually nothing at depth of approx. 4m

- Based on this top 5m of the DIPPs were reinforced with UC section

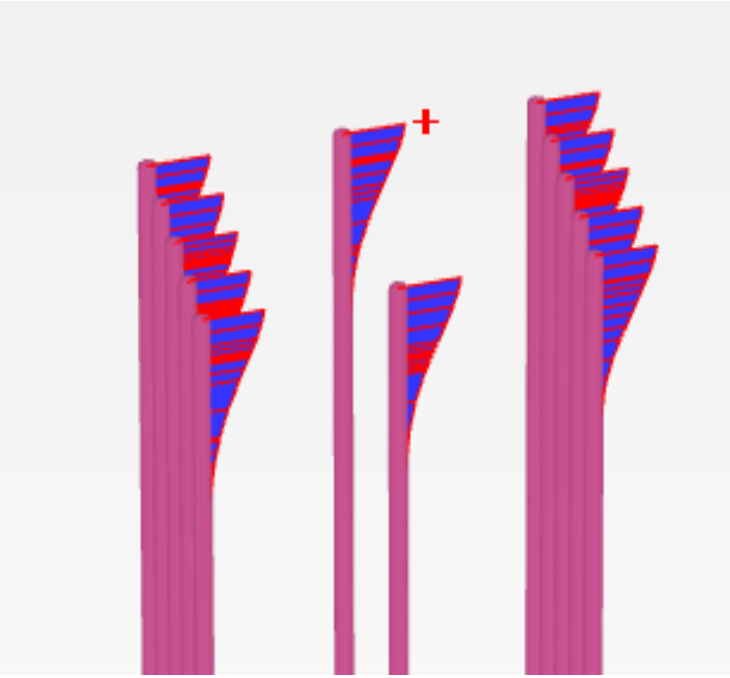

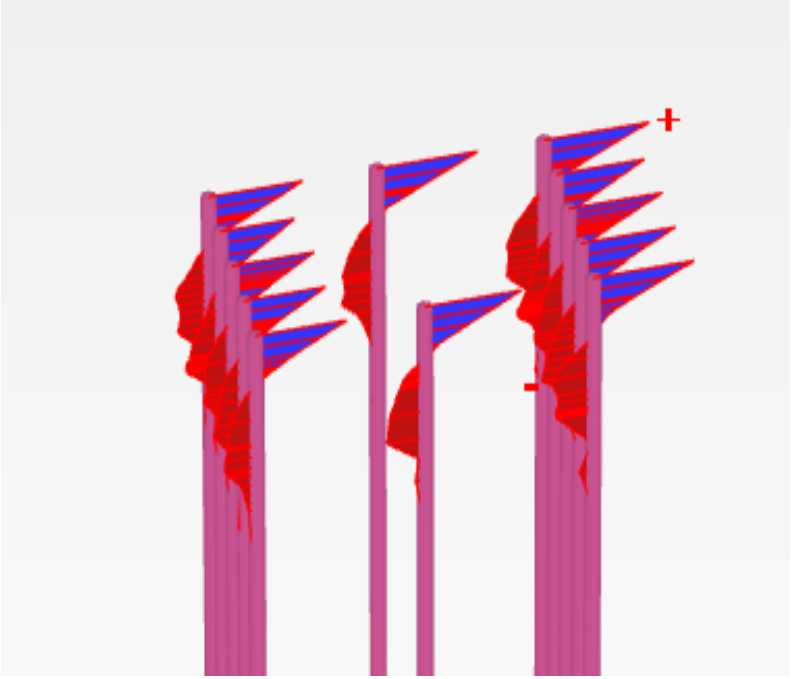

Settlement contours – PLAXIS 3D

- As shown pile toe movement is negligible, indicating that the pile head settlement were predominantly due to elastic shortening of the piles

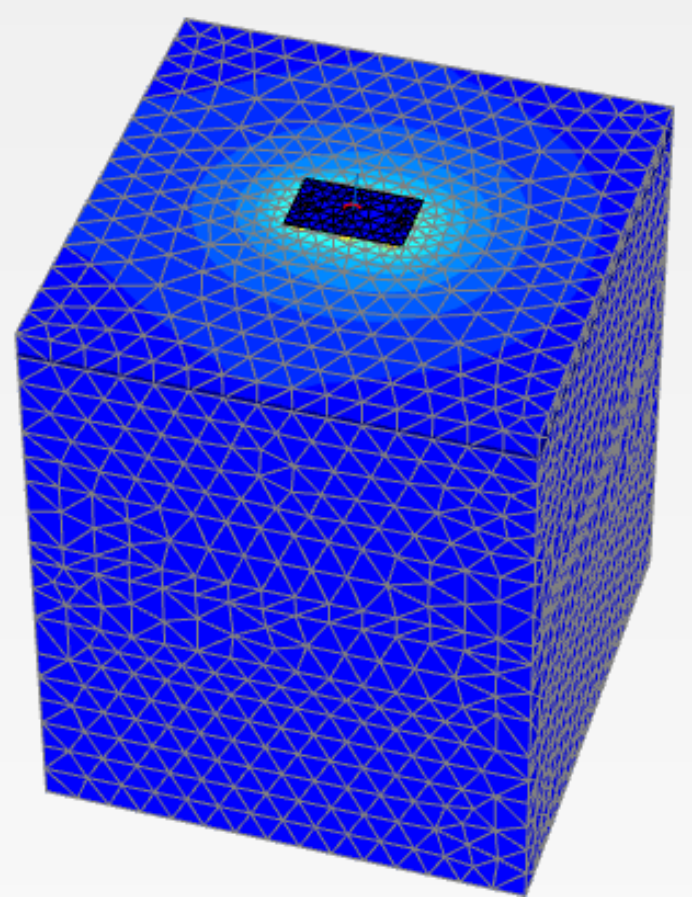

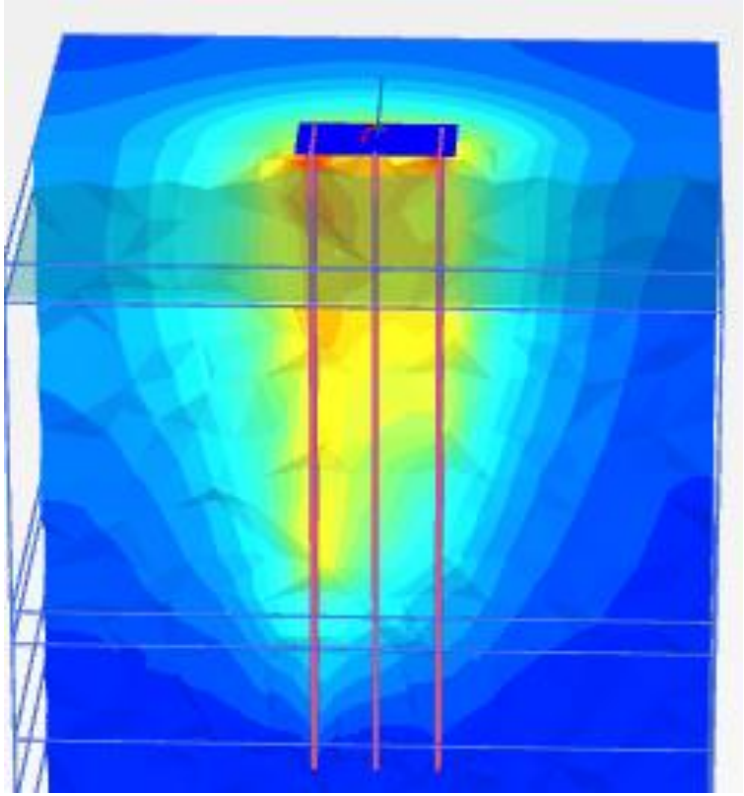

Geotechnical capacity – PLAXIS 3D

- The pile geotechnical capacity was mainly derived from shaft resistance
- As shown, mobilised toe resistance from PLAXIS 3D were very small
- The pile end bearing is not fully mobilised (small movements shown before)

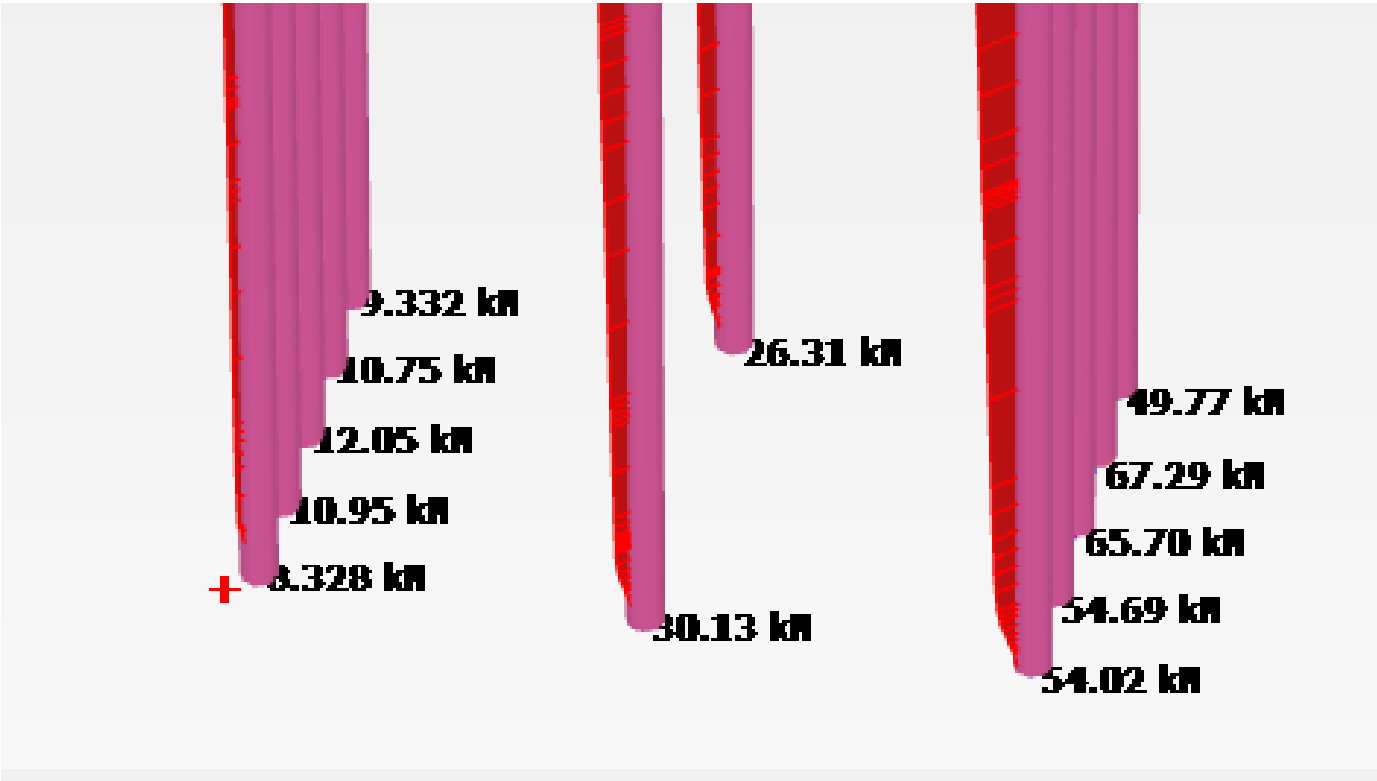

5.0 PILE LOAD TESTING

EIC ACTIVITIES

Pile Tests & Results

- Six piles were tested using dynamic load testing with PDA & CAPWAP analysis;
  - 1 at each abutment
  - 2 at each piers
- Pile Test results are presented below

Test Pile ID	Pile Length (m)	Ultimate Geotechnical Strength (kN)	Test Load from PDA (kN)	Test Load from CAPWAP (kN)	Total Shaft Resistance (kN)	Mobilised Toe Resistance (kN)	Pile Head Settlement at design Load (mm)
2EA	29.5	430	1242	1224	1183	41	3
1EP	29.9	1340	1703	1850	1698	152	13
2EP	29.8	1340	1857	2076	1850	226	13
7WP	11.5	1380	2063	2180	2010	170	7
8WP	7.6	1380	1538	1568	1286	282	8
3WA	11.3	740	1528	1584	803	780	4

- All tested piles exceeded the required geotechnical capacity

Pile Load Testing

- During the design stage, refusal in basalt was assumed at 60mm/ 30sec of driving (contractor's experience)
- Based on actual pile driving records refusal was achieved at less than12mm/ 30sec
- Test results indicated significantly higher shaft resistance than expected, particularly at the west abutment (up to 300-600kPa)
- The above could be attributed to presence XW-HW basalt which may have been penetrated through during the driving process
- All tested piles exceeded the required ultimate geotechnical capacity
- Settlements under serviceability loads were well below the criteria
- With the above DIPP piles were successfully used for the first time on a VicRoads Project.

Construction Photos

Lifting in place of the superstructure

Acknowledgments