Hands-On Relay School 2013

Teleprotection Schemes and Equipment

James W. Ebrecht
Young Power Equipment
Scottsdale, AZ

Teleprotection Schemes And Equipment

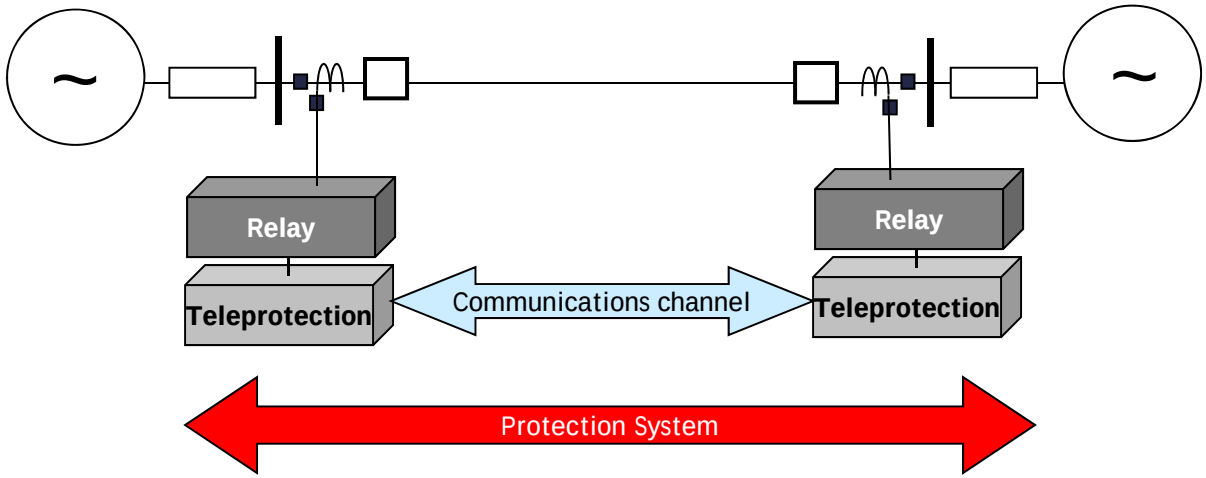

Why Use Communications?

Teleprotection provides several important benefits

- **Trip only the faulted line section.**
- **High speed simultaneous clearing for all internal line faults including end zone faults.**
- **Prevents overtripping on external line faults.**
- **Allows existing lines to transmit greater power.**
- **Reduces transmission line damage.**
- **Allows for high speed reclosing.**

Teleprotection History

1935

- AC Pilot Wire Relays
  - Short lines
- Directional Comparison with Distance Elements
  - Power Line Carrier
  - Analog Microwave
  - Audiotone
- Phase Comparison*
  - Power Line Carrier
- Current Differential and Charge Comparison*
  - Audiotone
  - Digital Channels

1990

Relaying Communication Equipment

- **Analog Channels** → FSK Tones
  - Analog Microwave channels
  - Leased Telephone Lines
  - Multiplexer voice channels
- **Digital Channels** → Proprietary and Industry standard codes
  - Digital Microwave channels
  - Leased Digital Data Service
  - Multiplexer data channels
- **Dedicated Fiber Optic Cable**
  - Singlemode Fiber
  - Multimode Fiber
- **Powerline Carrier** → RF Frequency coupled to Transmission line.
  - On / Off Carrier
  - Frequency Shift Carrier

- Pilot Wire
  - Metallic cable between the substations
- Voice Channels, Audiotone
  - Leased telephone lines
  - Analog microwave
  - Analog DSO
- Digital media
  - CSU/DSU 2,400 bps to 56/64 kbps leased phone line
  - Dedicated fiber optic pair (C37.94)
  - Multiplexed digital networks (T1/SONET/MPLS)
    - Communication link may be fiber, metallic or digital microwave
  - Spread Spectrum Radio
    - Very limited use for protection signaling

Coming soon to a substation near you….
Packetized data Ethernet/IP Teleprotection

IEC 61850

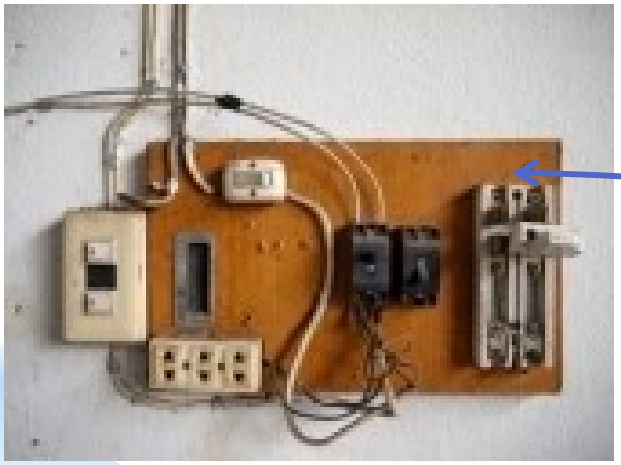

From this to this

Directional Comparison Blocking

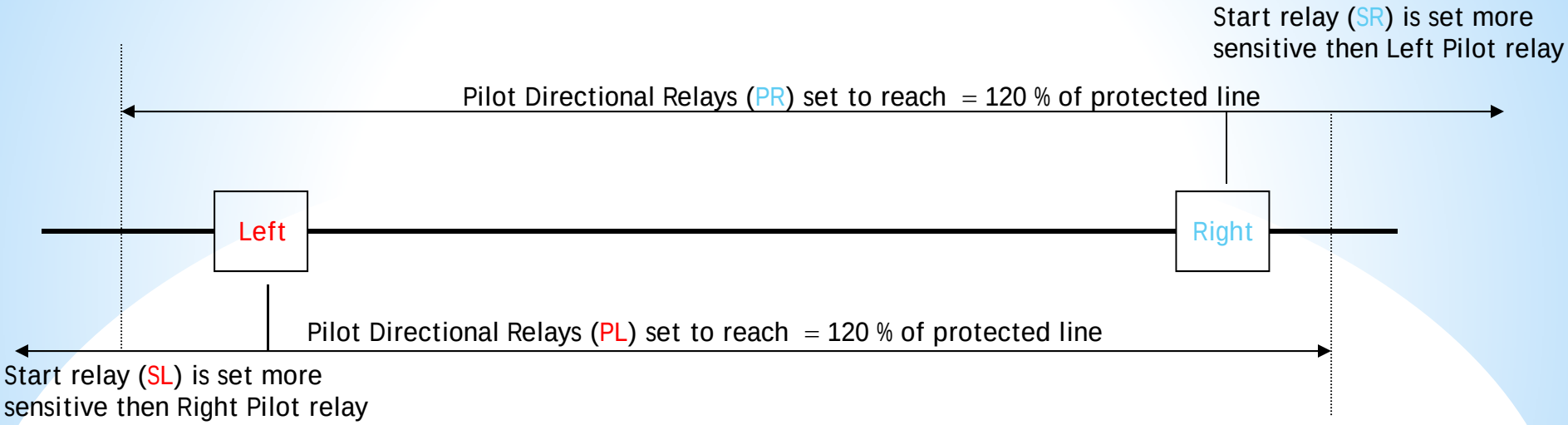

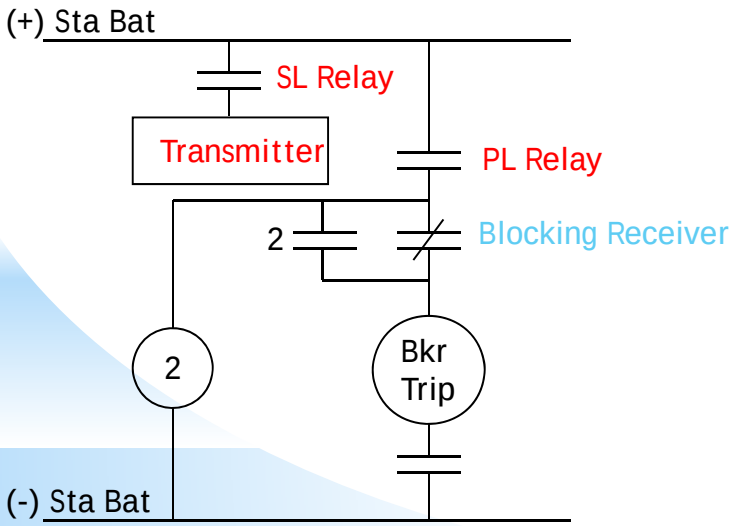

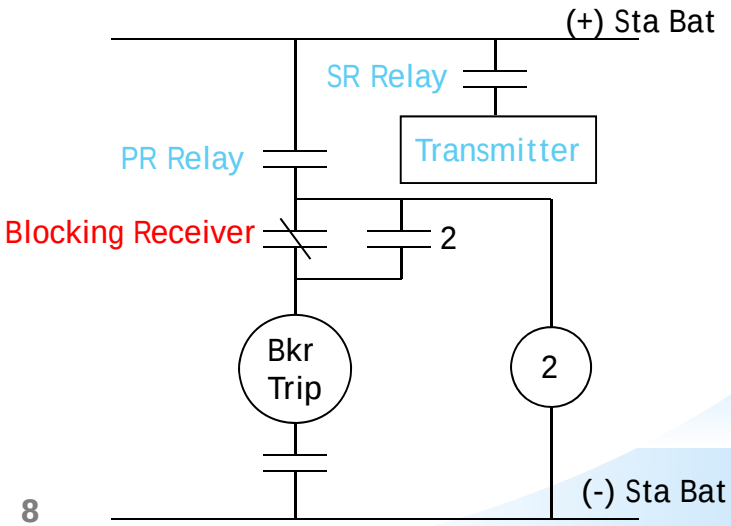

Blocking channel requirements

Operate Time:
Blocking applications require channels times between 3 to 5 msec. These times are necessary to prevent the remote terminal from “Over Tripping” on external faults.

Security:
Blocking applications require minimal security because the communication channel can not cause a false trip

Dependability:
Blocking applications are highly dependably because the relaying system will operate without the teleprotection channel.

Analog Channel:
Rarely used because of the slow operate times. Channels require wide bandwidth for fast operate times. Power utility may have to lease telephone channels.

Digital & Fiber Optic:
Becoming more popular because of the fast operate times, and increasing availability.

Powerline Carrier:
Most popular because of a large installed base. The power utility has complete control over the communications channel, and the equipment.

Permissive Transfer Tripping

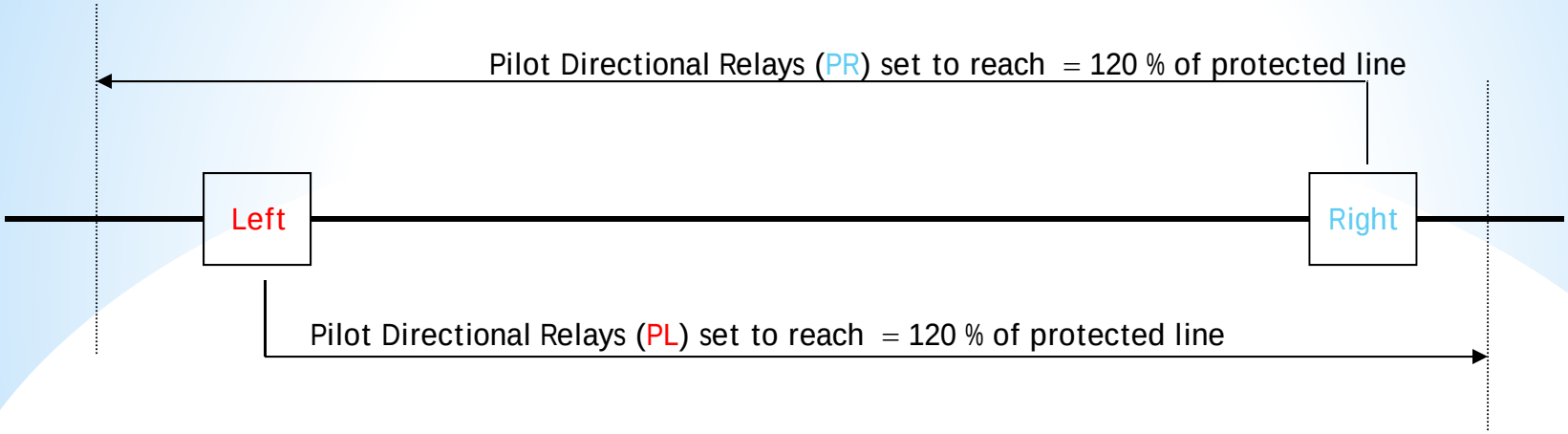

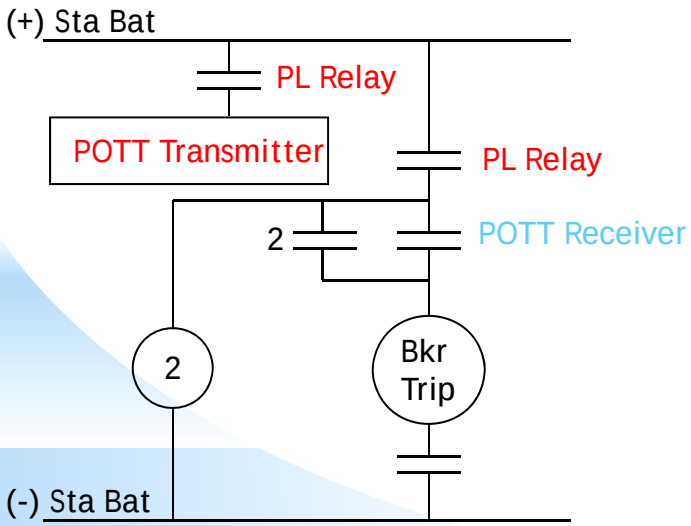

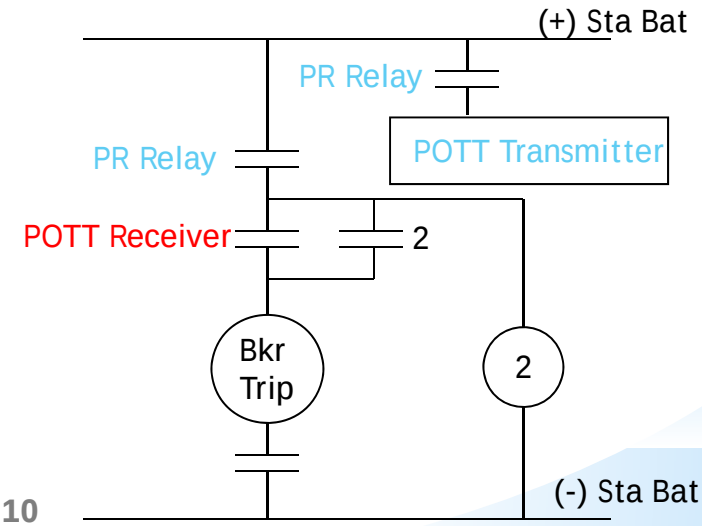

Permissive channel requirements

Operate Time:
Blocking applications require channels times between 8 to 12msc. These times are necessary to allow the remote terminal to trip quickly for all internal line faults

Security:
Permissive applications require security to prevent the channel from enabling a trip. Typical problems occur for current reversals on parallel lines.

Dependability:
Permissive applications require dependably to permit high speed clearing of both terminal. Unblock trip outputs are commonly used to enable tripping should the channel fail, coincident with a line fault.

Analog Channel:
Commonly used because they offer diverse routing. Channels require medium bandwidth to provide the required operate times.

Digital & Fiber Optic:
Becoming more popular because of the fast operate times, and increasing availability.

Powerline Carrier:
Most popular because of a large installed base. The power utility has complete control over the communications channel, and the equipment. Unblock trip output is always provided, either programmed into the relay, or the communication equipment.

Direct Transfer Tripping

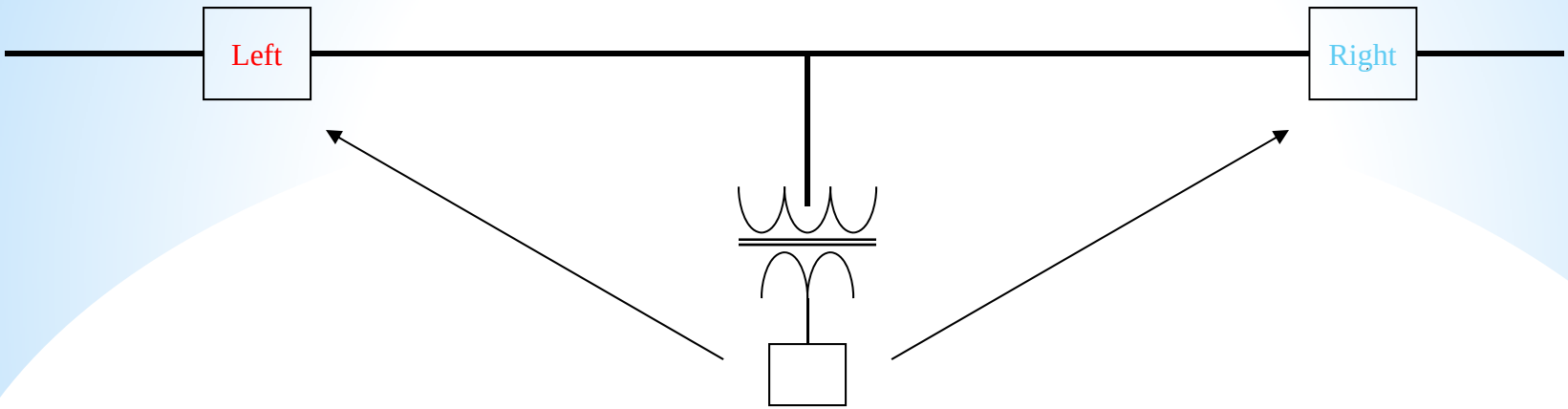

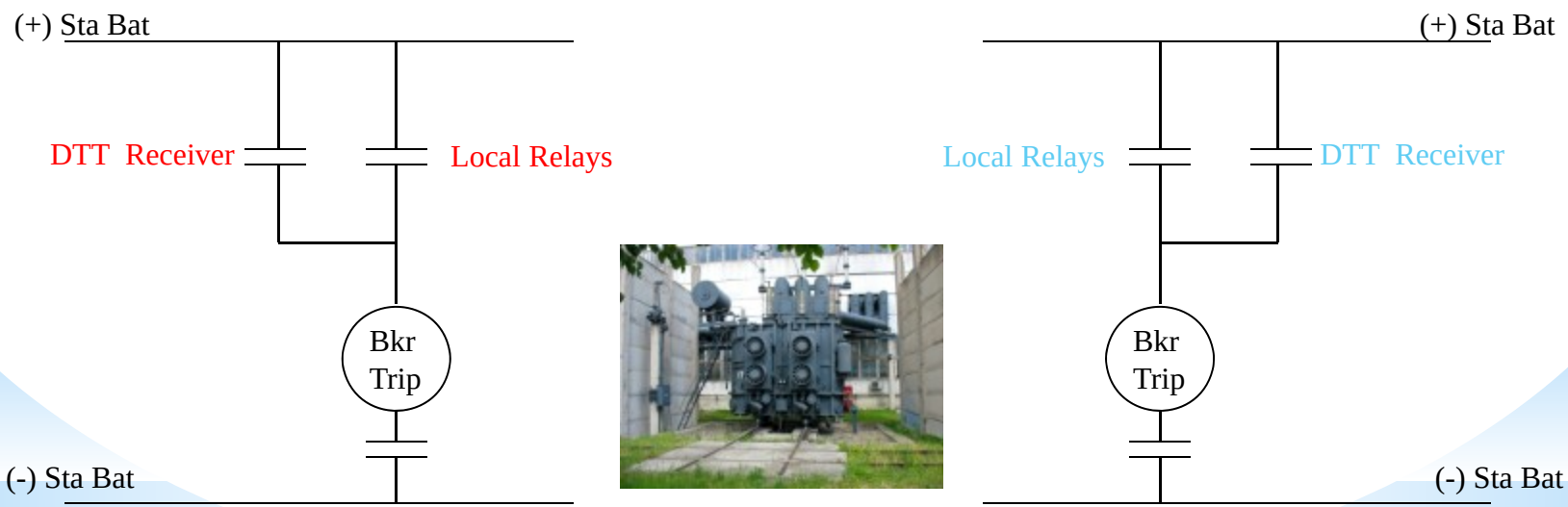

Direct Transfer Trip channel requirements

Operate Time:
DTT applications require typical channels times around 12msc. These times are not as critical as Blocking, or Permissive applications, as these are backup functions.

Security:
DTT applications require very high security to prevent the channel from directly causing a false trip output.

Dependability:
DTT applications require very high dependably. This application is typically a breaker failure backup, and must operate to limit equipment damage.

Analog Channel:
Commonly used because they offer reliability due to diverse routing. Channels require medium bandwidth to provide the required operate times. Applications always use dual tones, on a dedicated channel, to provide high security.

Digital & Fiber Optic:
Becoming more popular because of the fast operate times, high security, dependability and increasing availability.

Powerline Carrier:
Most popular because of a large installed base. The power utility has complete control over the communications channel, and the equipment. Unblock trip output is never used in DTT applications.

Phase Comparison Relaying

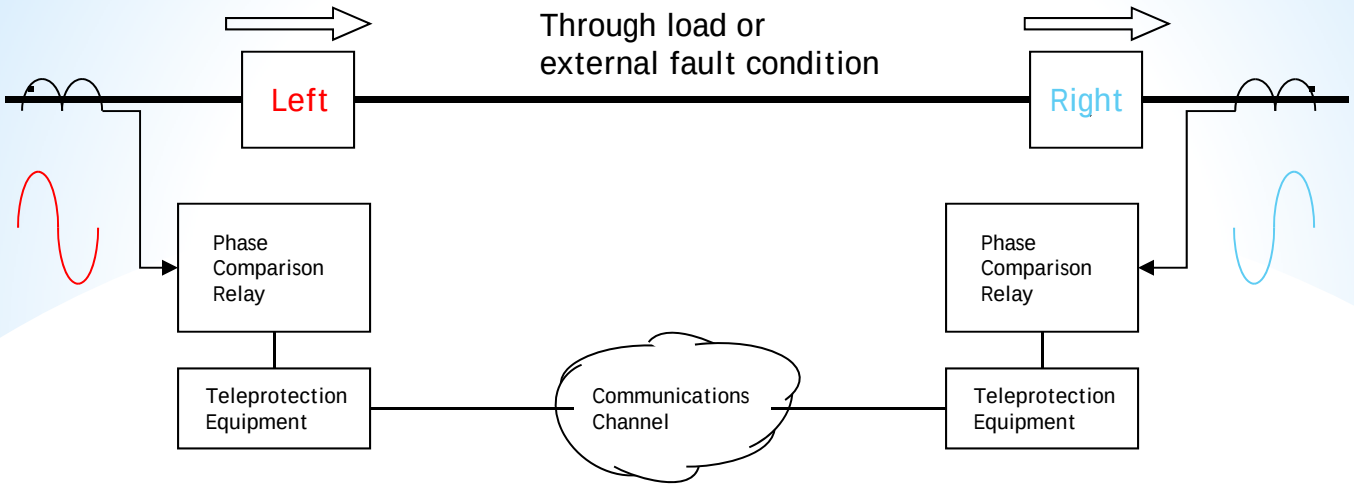

External Fault Conditions

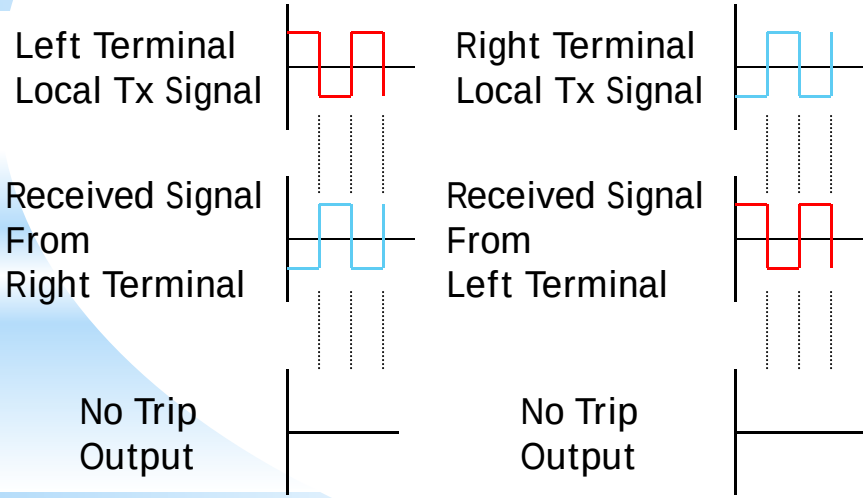

Internal Fault Conditions

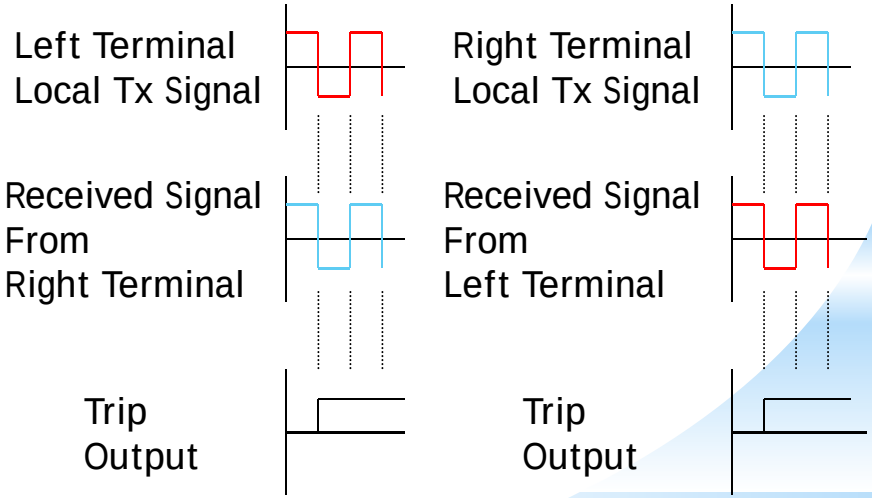

Phase Comparison Relay Channel

Operate Time:
Phase Comparison applications require channels times around 8 ms. The channel delay should be constant, as excessive channel delay time will cause a phase shift in the composite current signal.

Security:
Single Phase Comparison applications utilize a “Blocking” philosophy, and can over trip on loss of signal. Dual phase comparison system utilize frequency shift keying, and an Unblock Trip” philosophy. This system utilizes an 150 ms unblock trip output to permit tripping upon loss of channel

Dependability:
The single phase comparison system is more dependable because receipt of a tripping command is not required to trip the system.

Analog Channel:
Frequency shift audio tones are commonly used for this application.

Digital & Fiber Optic:
Becoming more popular because of the fast channel times, and increasing availability. Channel delay could be critical if the teleprotection is applied on a switched network.

Powerline Carrier:
On/Off Powerline carrier is used for single phase comparison systems, while FSK carrier is used for dual phase comparison systems.

Current Differential Protection

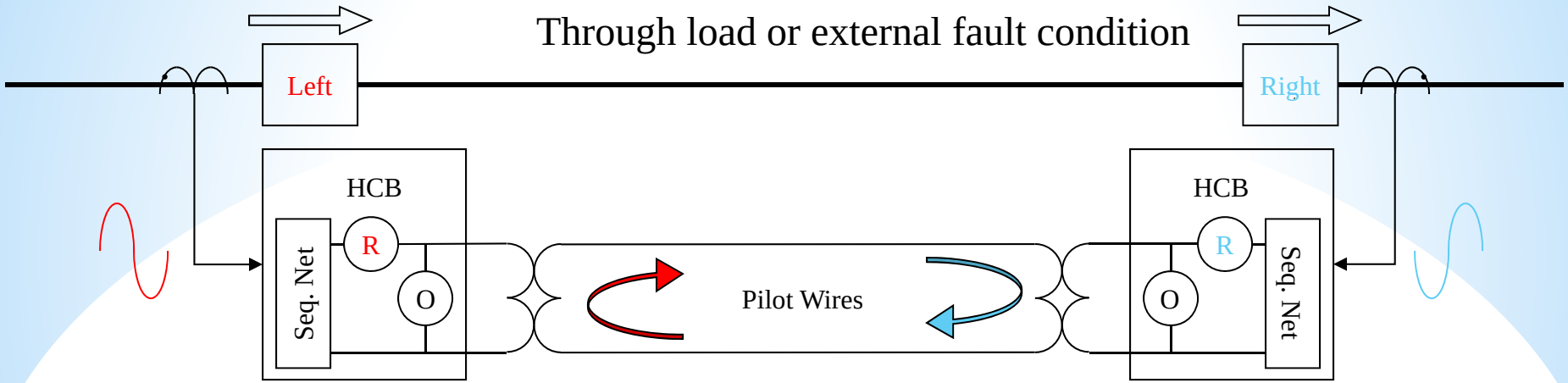

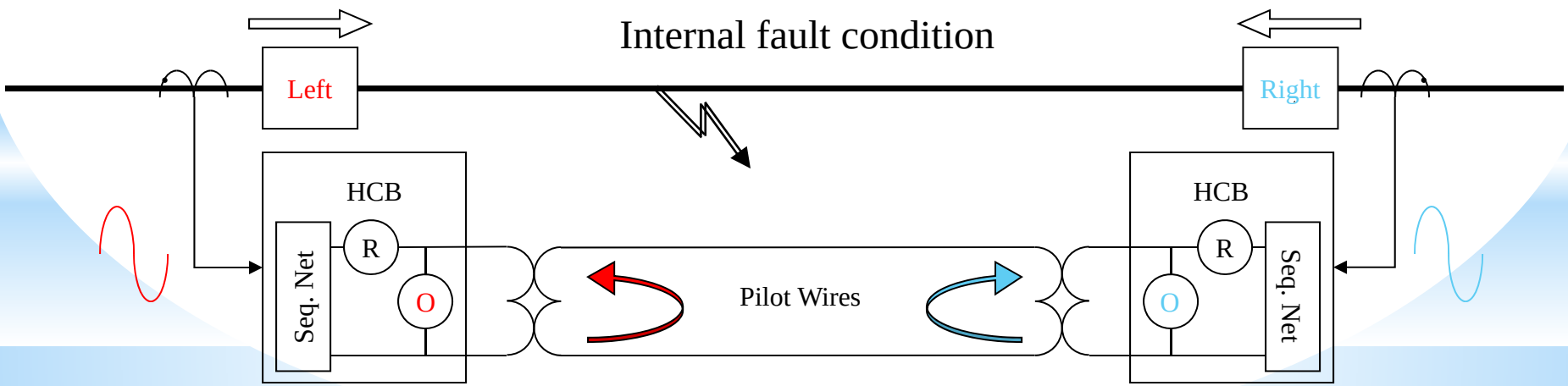

Current Differential channel requirements

Operate Time:
Current differential applications require channels times less then 1 msec. Excess channel delay time will cause a phase shift in the composite current signal.

Security:
Because of the large amount of data required for current differential applications, a loss of channel is more probable then a false trip. False tripping would most likely occur if the HCB operated as a over current relay, or on the independent transfer trip function.

Dependability:
Dependability is critical for current differential applications, because without communications the relay system will not operate.

Analog Channel:
Not recommended for current differential applications, because of the excessive channel delay times.

Digital & Fiber Optic:
Becoming more popular because of the fast channel times, and increasing availability. Channel delay is critical and must be calculated for each channel routing.

Powerline Carrier:
Powerline carrier is never used for current differential applications because the channel may be corrupted and unavailable when the line is faulted.

Effects of channel delay on Current Differential Protection

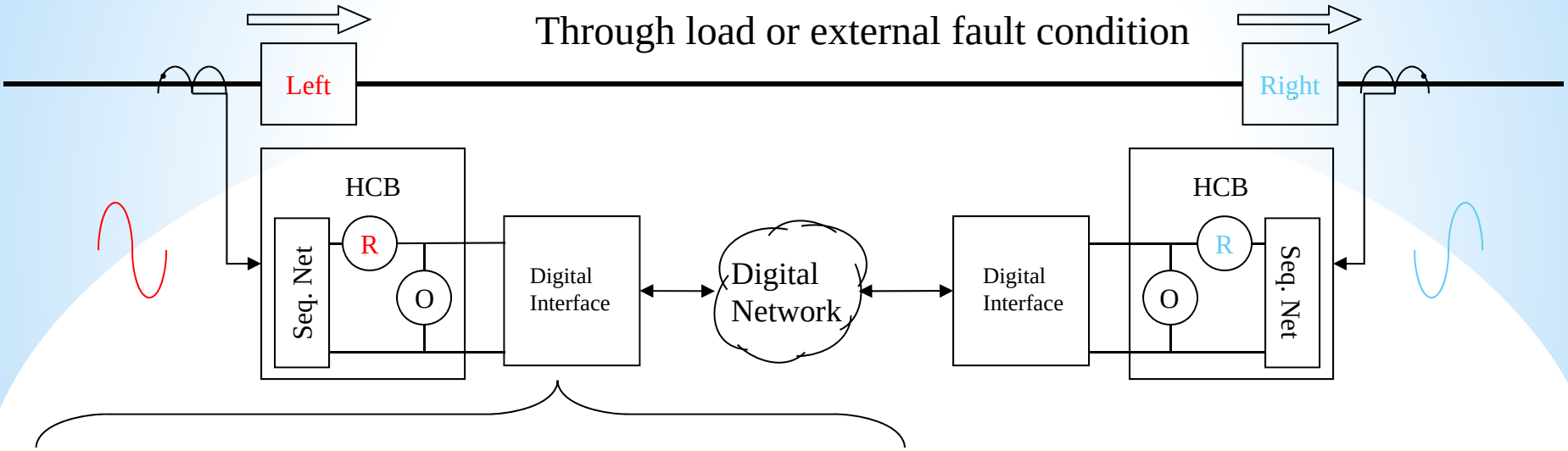

0° Phase Shift
No Channel Delay

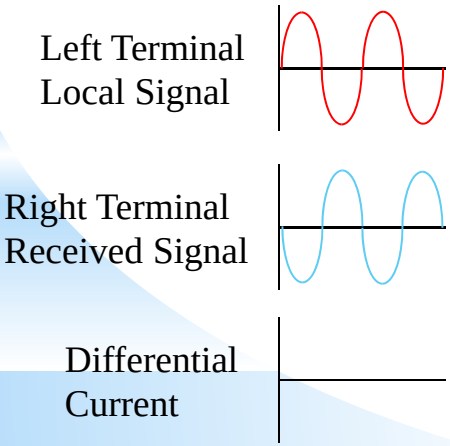

90° Phase Shift
4 msec Channel Delay

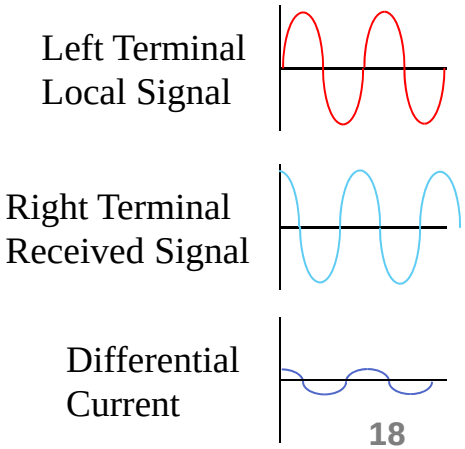

Channel Delay

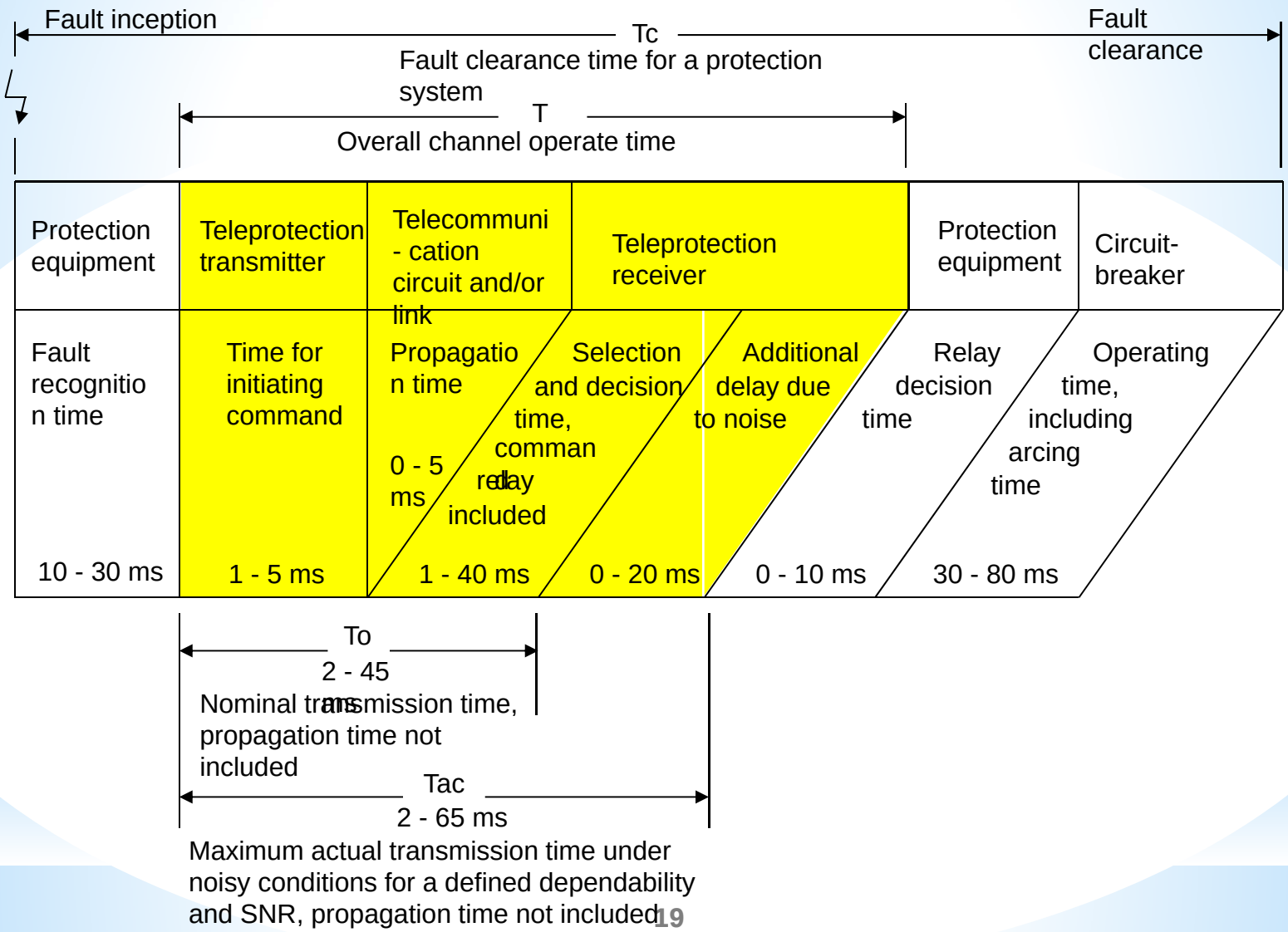

Types of Communications, Channels and Circuits

SONET

Synchronous Optical Network

Commonly referred to and notated as OC3, OC12, OC48 etc.

OC1 = 28 T1

WHAT IS SONET?

Synchronous Optical NETwork

A Global Standard for Optical Signals for Communications

- American National Standards Institute (ANSI)

- Telcordia which was Bell Communications Research (Bellcore)

- International Telecommunications Union (ITU)

Motivation: An Open Systems Optical Architecture for Multi-vender Interworking

T1 Channel Bank

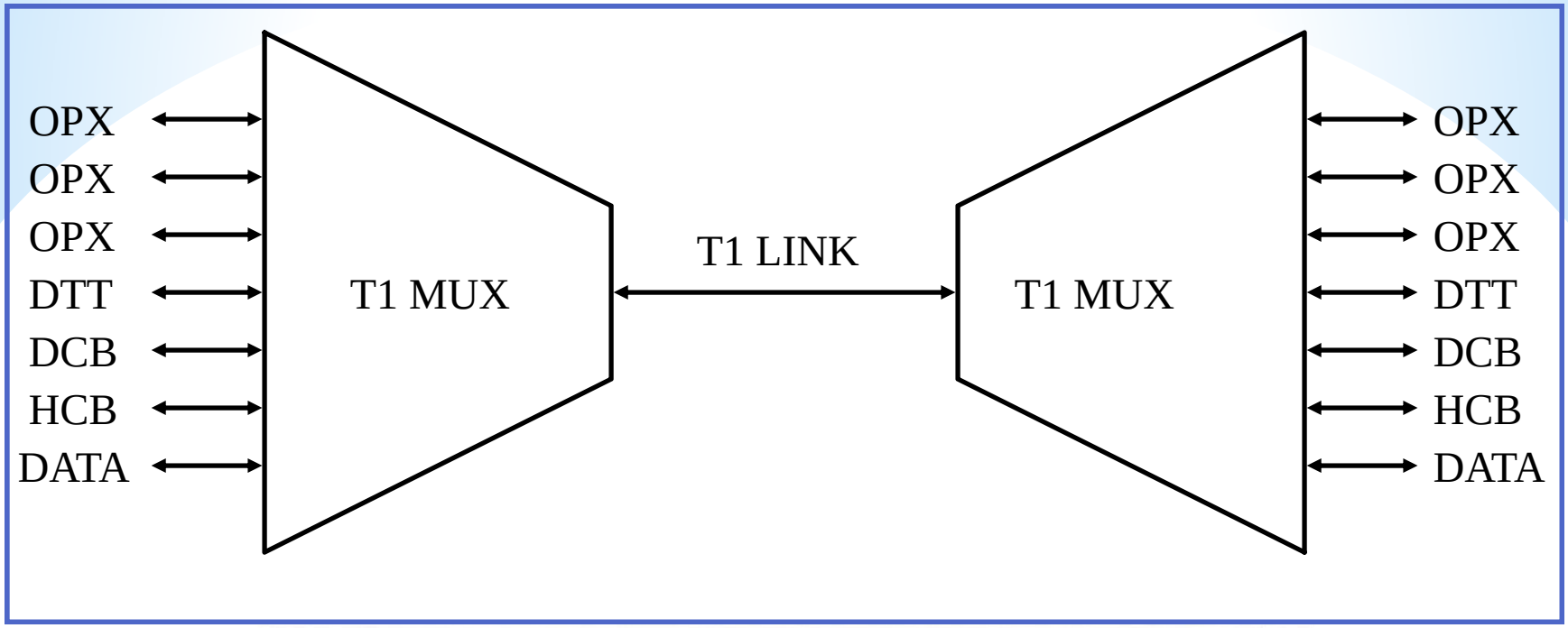

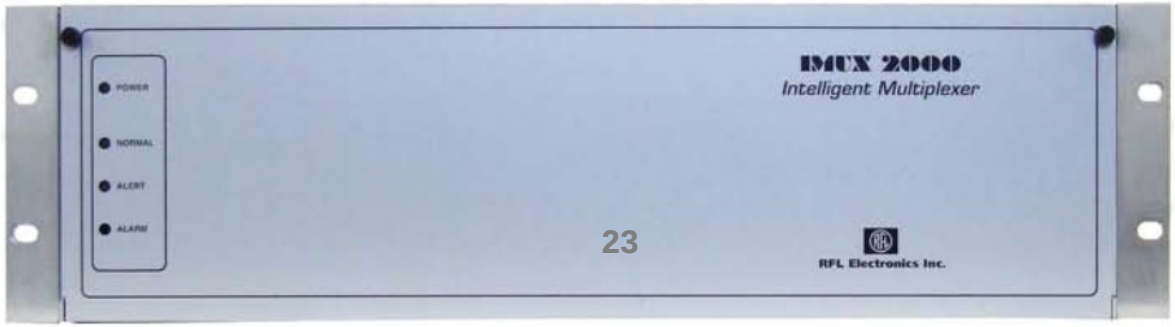

Channel Delay Time over T1 Multiplexer

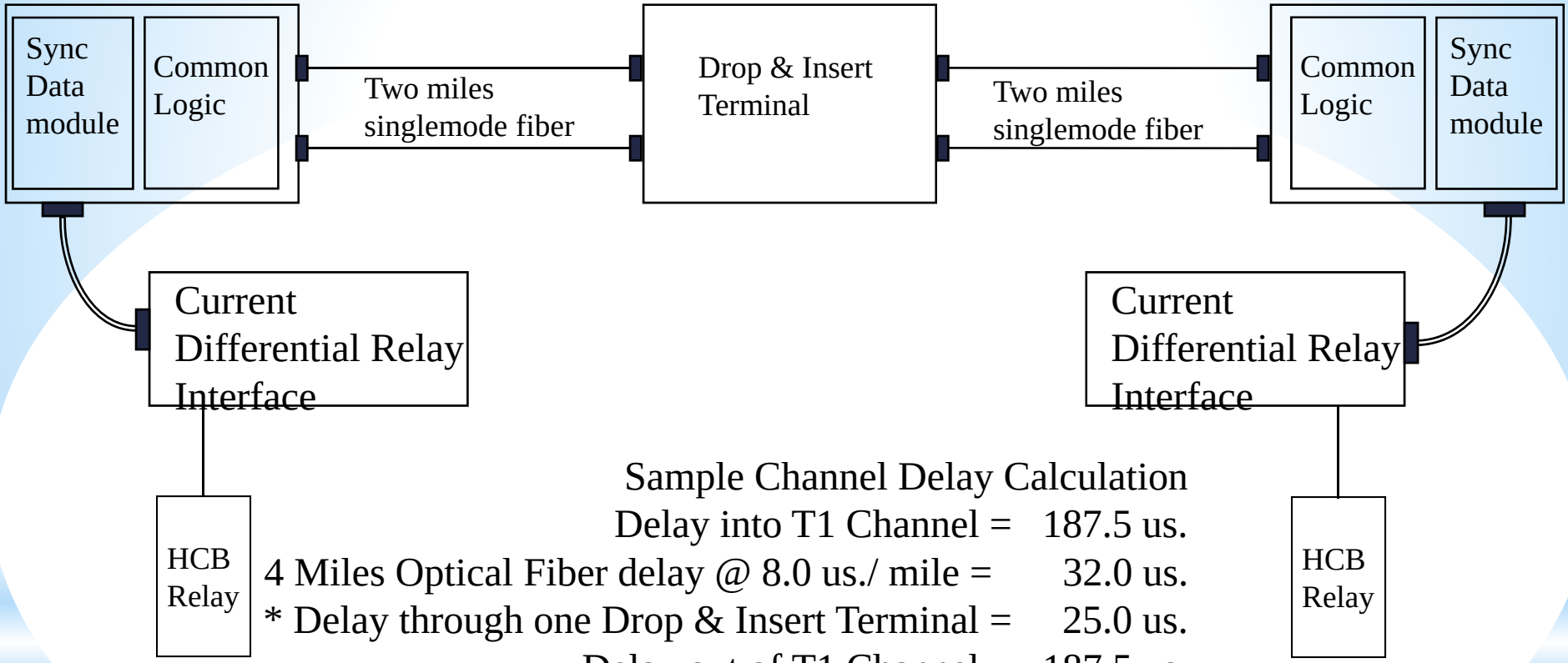

Sample Channel Delay Calculation

Delay into T1 Channel =	187.5 us.
4 Miles Optical Fiber delay @ 8.0 us./ mile =	32.0 us.
* Delay through one Drop & Insert Terminal =	25.0 us.
Delay out of T1 Channel =	187.5 us.
Total delay time =	432.0 us.

* Note:
Systems utilizing Digital Access and Cross-connect (DACS) units will incur a 250us delay going into and out of each DACS

Digital Circuits and Equipment

Proprietary Circuits and Equipment:
SEL Mirrored Bits, 421
RFL Digital, 9745, GARD8000
GE Digital, N60
Iniven Digital, PRU2000

Non-Proprietary Circuits and Equipment:
IEC 61850 and device
C37.94 interfaces

Audio Circuits or Paths

What is an Audio Circuit?

300 to 3,400 Hertz

Digital or Analog Microwave

A VF DSO on a channel bank

Analog Voice Channel Frequency Allocation

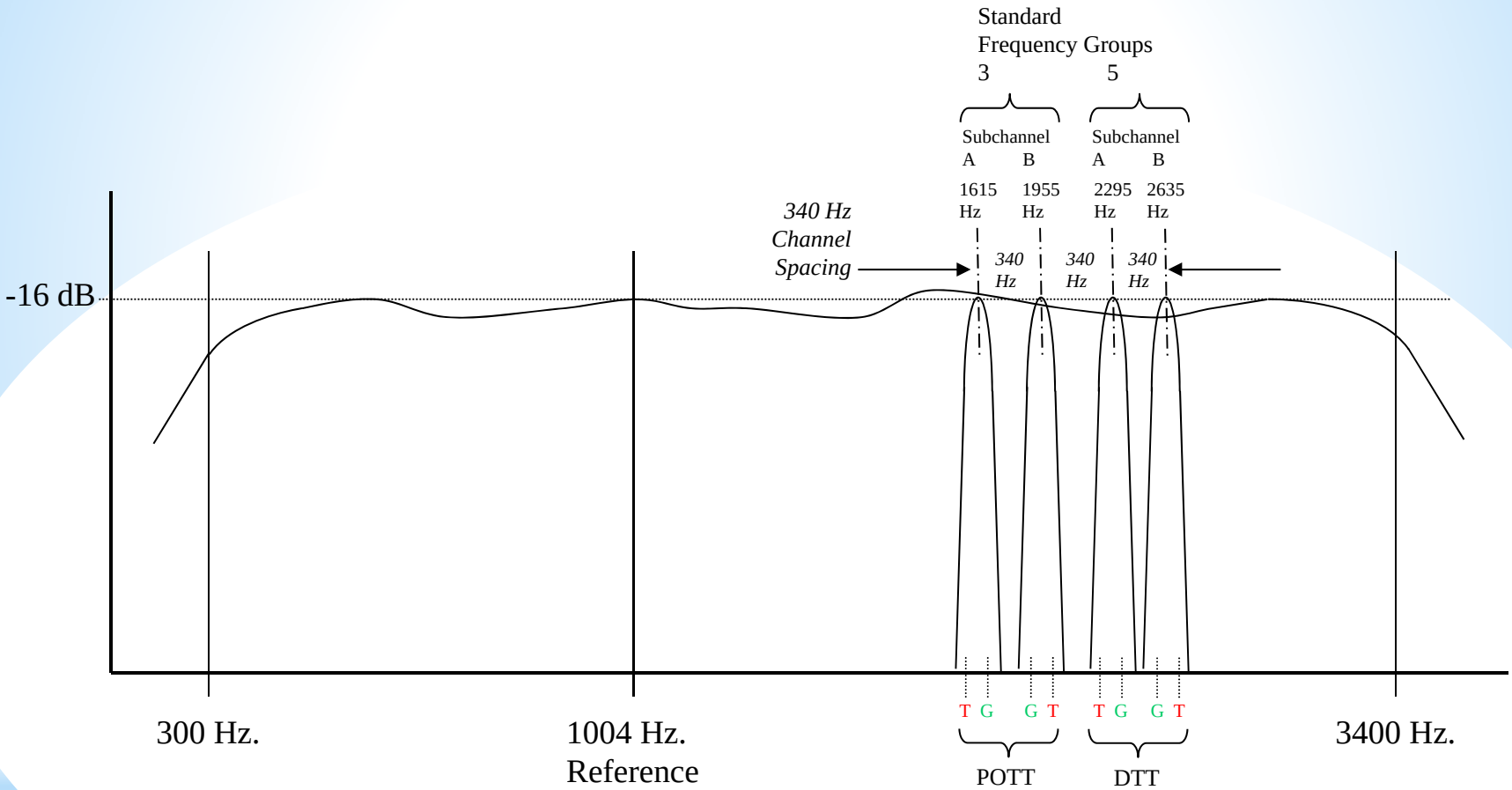

Frequency Group 3
(+/- 75 Hz. Shift)
Trip A = 1540 Hz.
Guard A = 1690 Hz.
Guard B = 1880 Hz.
Trip B = 2030 Hz.

Frequency Group 5
(+/- 75 Hz. Shift)
Trip A = 2220 Hz.
Guard A = 2370 Hz.
Guard B = 2560 Hz.
Trip B = 2710 Hz.

FSK Keying

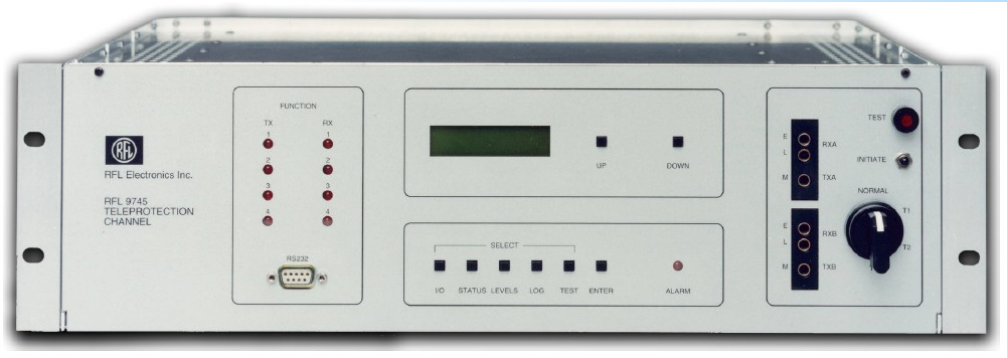

Basic function is a change of frequency to change trip output status

Tones are linear and do not contain data

Receiver monitors tones for proper timing and freq. shift

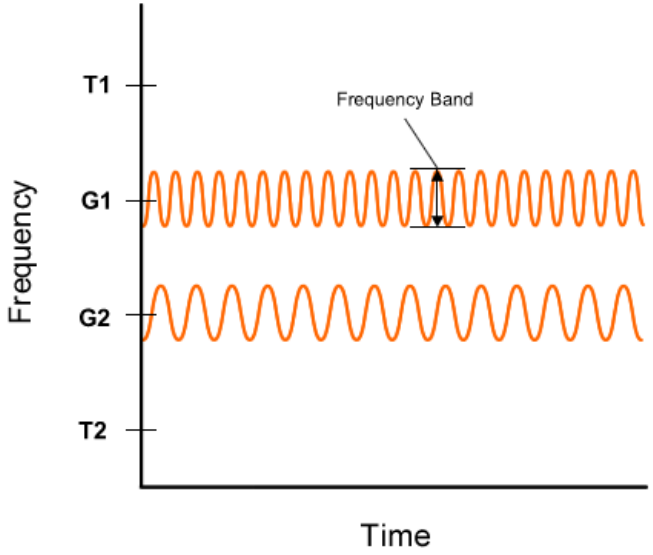

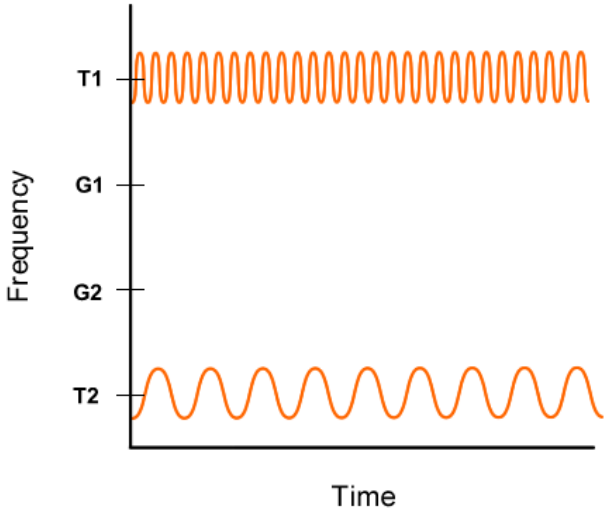

PDR-2000

INIVEN
DIVISION OF CONOLOG CORP.

Digital Teleprotection Terminal

Orthogonal Audio Keying

Digital Data over Audio

OFDM Protocol

Operates at 6.6 Kbps

22 simultaneous tones

Uses entire Audio Frequency band (300Hz - 3200Hz)

- Narrow bands at different frequencies transmit digital data
- Phase comparison to send 2 bits per tone
- Synced using pilot tones

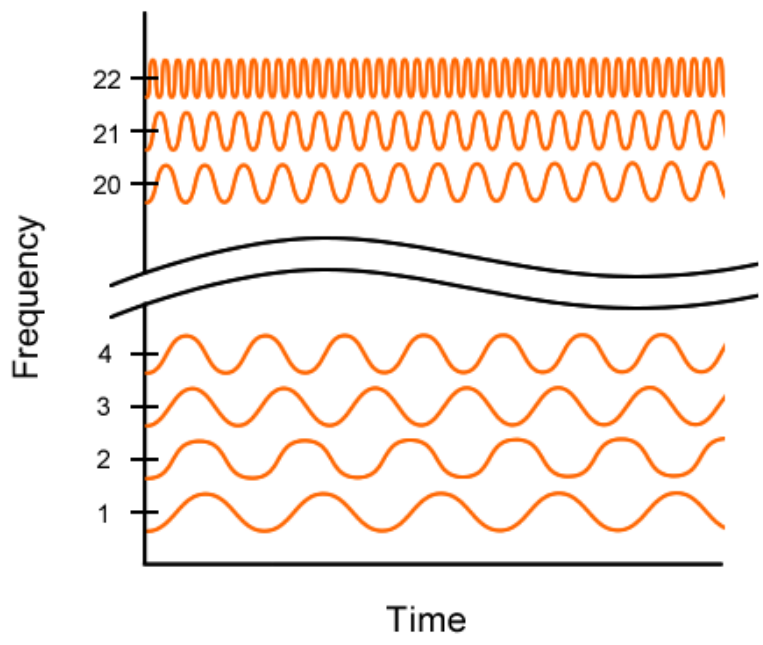

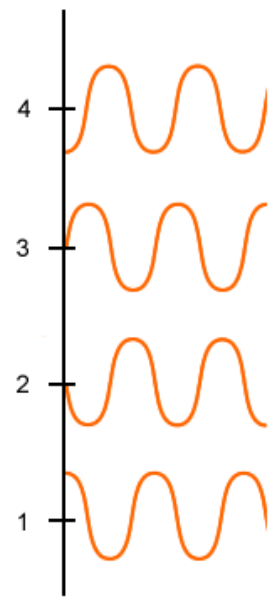

Powerline Carrier

Powerline Carrier

Transmission Line Communications Medium

Advantages:

1. The powerline offers a robust medium that is designed for reliable service.

2. The powerline is under the complete control of the utility.

3. The powerline originates, and terminates at the desired locations.

Disadvantages:

1. Increased signal attenuation may occur at the time of the fault.

2. Noise levels may increase at the time of the fault.

The powerline carrier signal must be coupled to the transmission line with expensive line tuning equipment.

Typical two terminal line, powerline carrier system

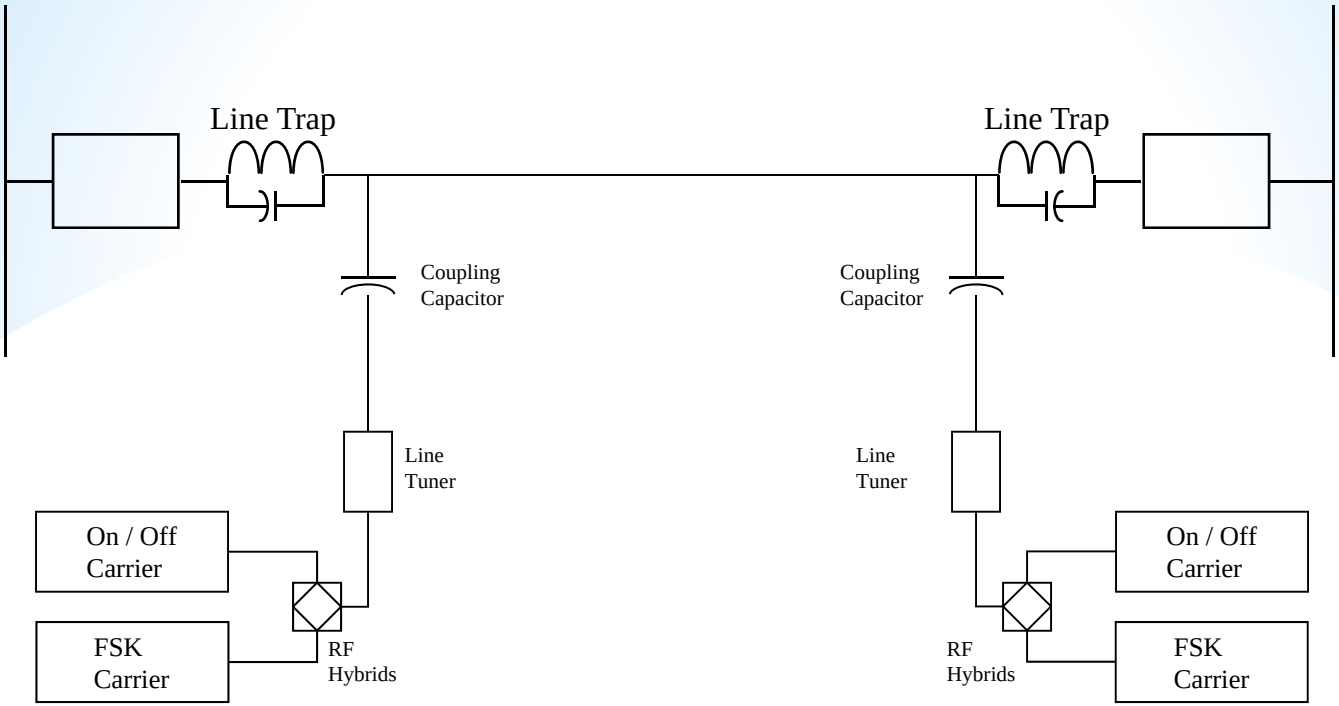

Powerline Carrier System Components

- Transmission Line
- Line Tuners
- Coupling Capacitors
- Line Traps
- RF Hybrids
- PLC Transmitter, and Receiving equipment
- Interconnecting coaxial cables

Typical two terminal line, powerline carrier system

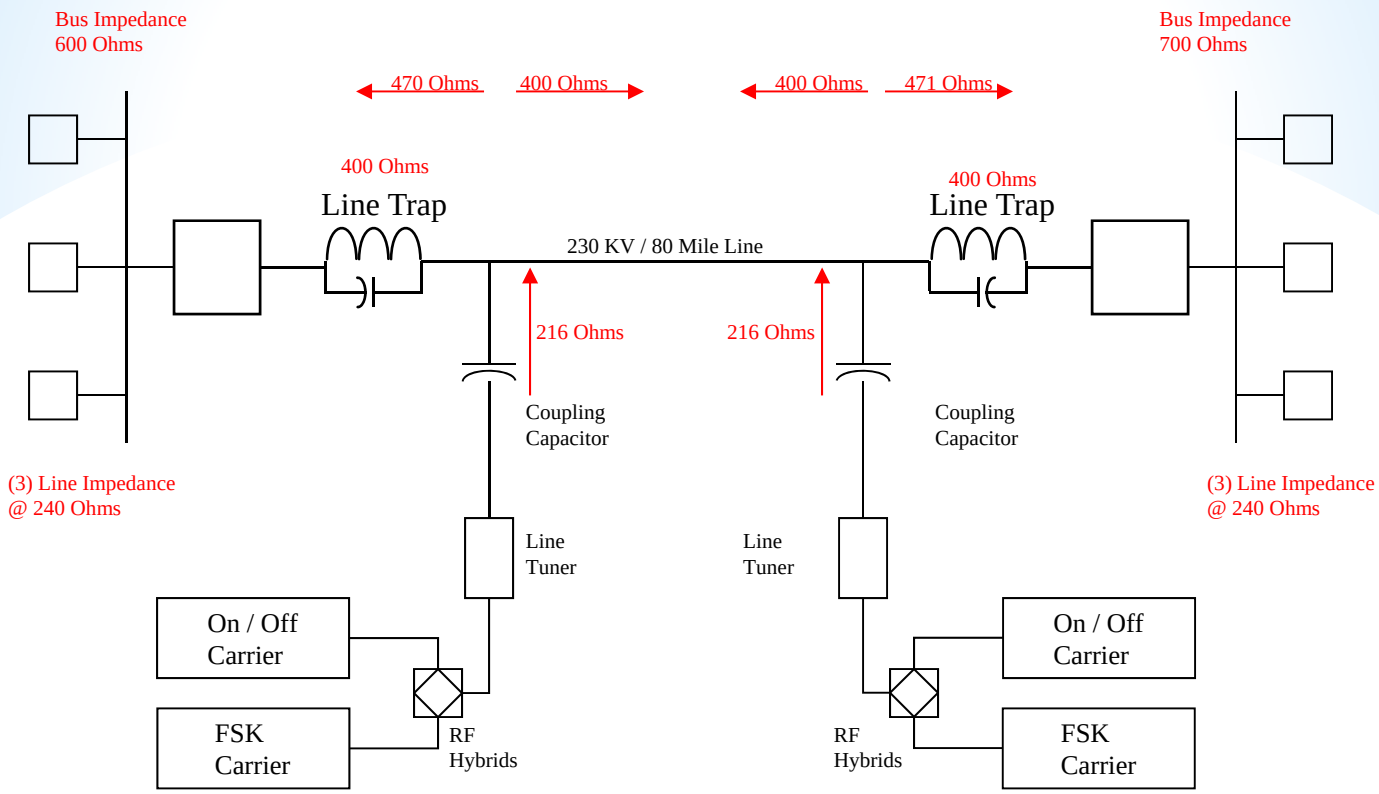

References and Credits:

Telecommunications of the Power System, Bob Ince, HRS 2003

The Art & Science of Protective Relaying, C. Russell Mason, GE

Communications for Power System Relaying, Solveig Ward

Communications for Power System Protection, Tom Dahlin

Newton's Telecom Dictionary, 23rd Edition

Marc Benou, Iniven

www.123rf.com, photos