Bringing ideas to life

CityLink Tulla Freeway Widening Project

Widening of Moonee Ponds Creek Bridges

Chris Halpin

aurecon

Bringing ideas to life

CityLink Tulla Freeway Project

- Additional traffic lanes to CityLink & West Gate Freeways
- Aurecon & GHD Joint Venture for CPB Contractors
- Widening, Load Rating & Strengthening of Moonee Ponds Creek Bridges:
  - Existing structure background
  - Widening details & key considerations
  - Load rating & strengthening details & key considerations

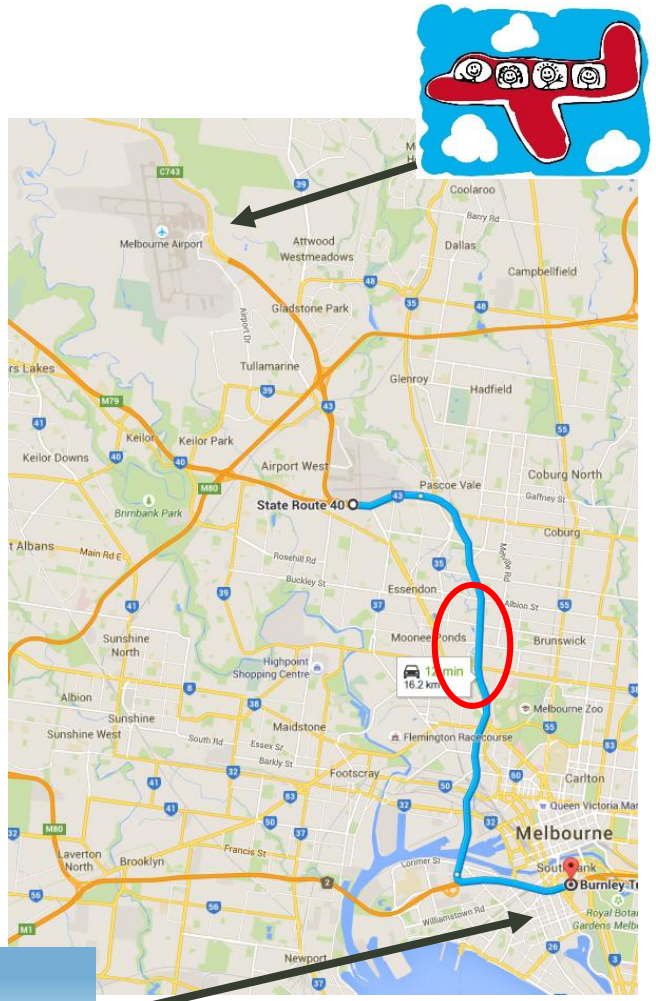

aurecon

Existing Bridge Details

- Moonee Ponds Creek Bridges:
  - MPC1
  - MPC2
  - MPC4
  - MPC6

- History:
  - Original bridge 1960's
  - Widened 1990's

- Existing bridge design loading:
  - Original bridge
    - HS20 / HS16
  - Widened bridge
    - T44 / L44
    - 62.5t B-Doubles
    - HLP400 loading lanes

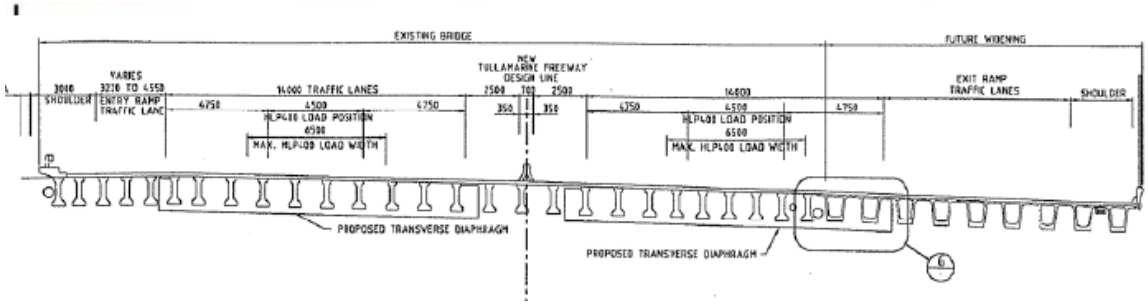

Existing Bridge Details Continued

- Superstructures:
  - Simply supported spans 23-26m
  - Original bridge:
    - 1100mm I-girders (MPC2, MPC4, MPC6)
    - 1200mm segmental box girders (MPC1)
    - In-situ deck slabs
    - Transverse diaphragms
  - Widened bridge:
    - 1200 – 1500mm Super-T girders
    - In-situ deck slabs tied to existing
    - Strengthening for HLP loading

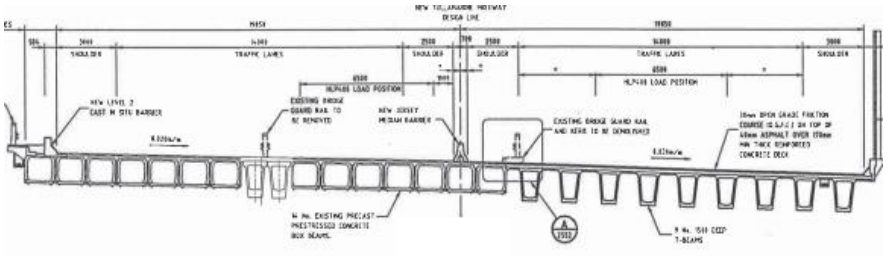

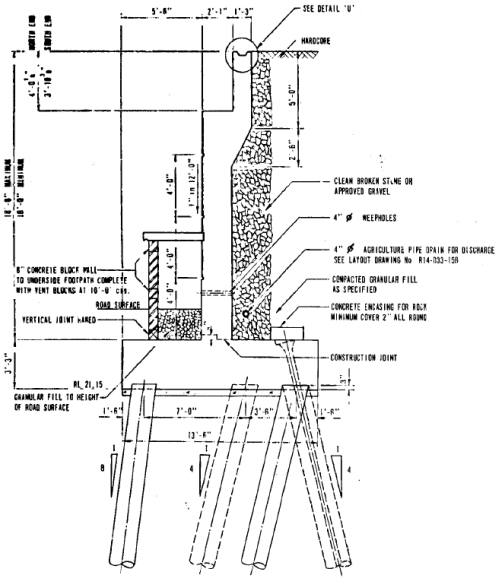

- Substructures:
  - Blade wall abutments on:
    - Spread footings
    - Driven piles with rock anchors

CTW Bridge Widening Details

- Superstructure:
  - Widening:
    1.2m – 4.6m
  - Super-T girders:
    900 – 1,550mm deep
  - In-situ decks slab connected via:
    - Hydro demolition with lapping of reinforcement (MPC1 & MPC6)
    - Vertically embedded ligatures (MPC2)
    - Saw cutting with drilled and epoxied starter bars (MPC4)

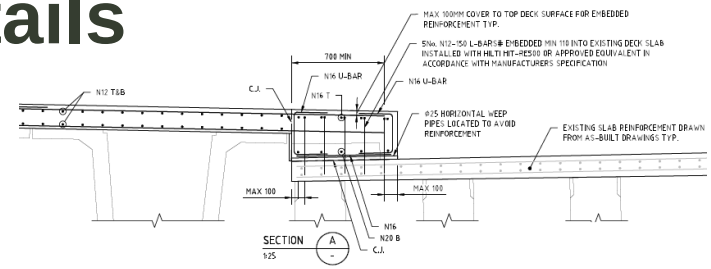

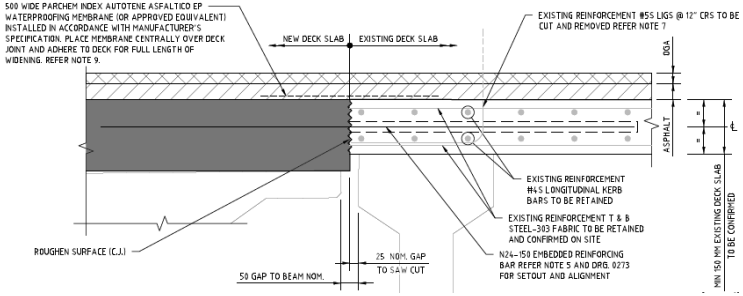

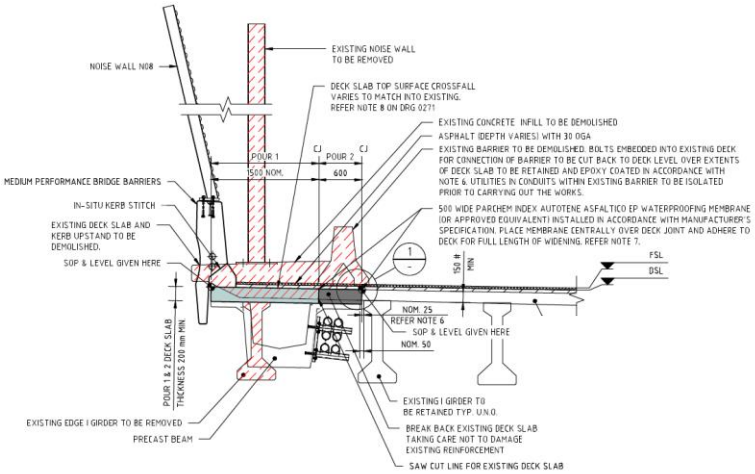

CTW Bridge Widening Details Continued

- Substructure:
  - MPC 1:
    - Localised bearing ledge modification
    - Offset pile cap
    - 1200mm bored pile
  - MPC 4:
    - Localised bearing ledge modification
    - Tie beam
    - Spread footing thickening

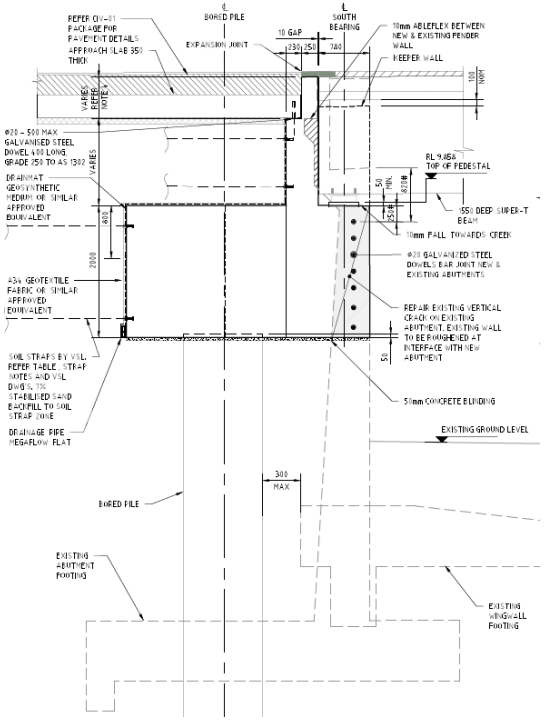

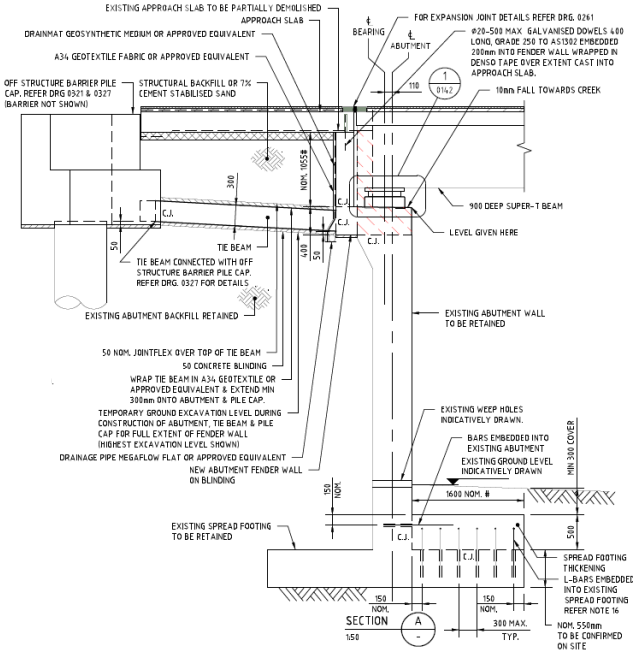

CTW Bridge Widening Details Continued

- Substructure Continued:
  - MPC 2:
    - Extended blade wall
    - 750mm / 900mm bored piles
    - 6m tall L-shaped retaining wall supporting barriers
  - MPC 6:
    - Extended blade wall
    - Driven piles
    - Predrilled & sleeved

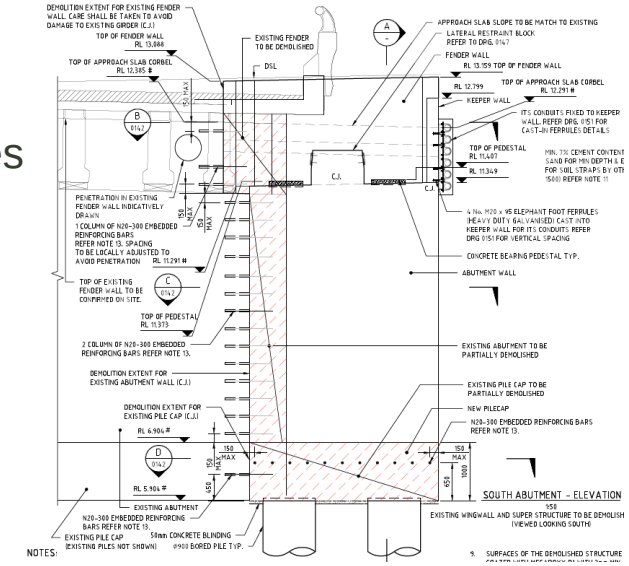

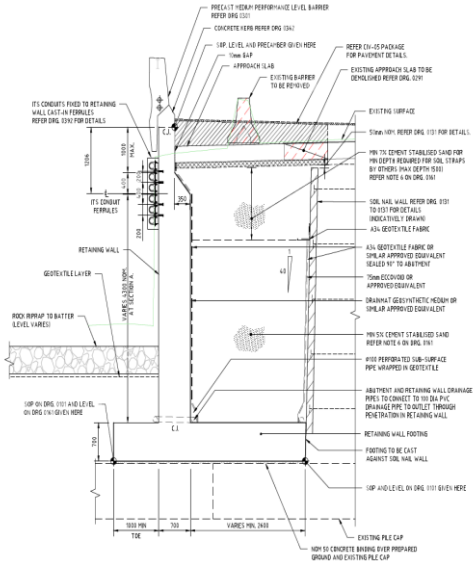

- Approach slabs:
  - Stitched to existing supporting OSB (Typical)
  - Independent (MPC2)

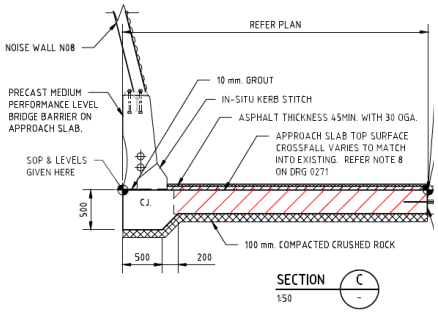

Key Widening Considerations

- Deck construction:
  - Staged construction to limit load transfer:
    1. Deck pour over girders
    2. 800mm wide stitch pour
  - Stitch pour time delay to limit load transfer:
    - 4 weeks – 750micro-strain
    - 2 weeks – 450micro-strain
  - Traffic restrictions to enable continuous traffic while limiting deflection / vibration to avoid dislodging or de-bonding reinforcement:
    1. Temporary barriers at minimum offset & 80kph
    2. Additional lane closures & 40kph

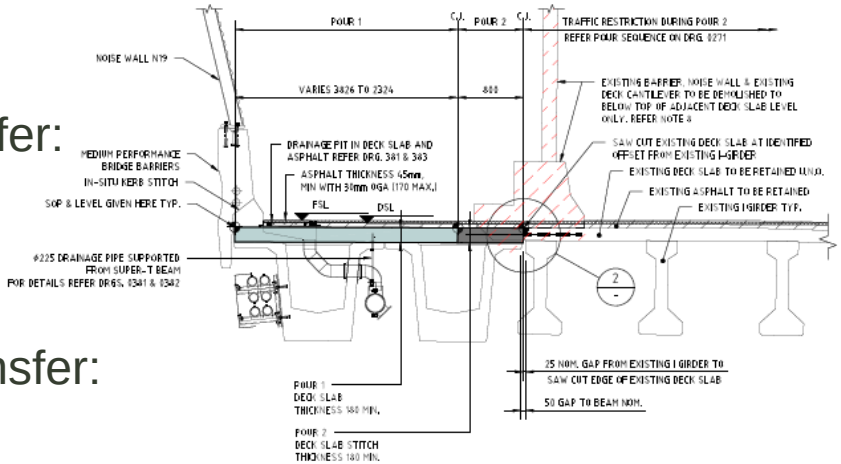

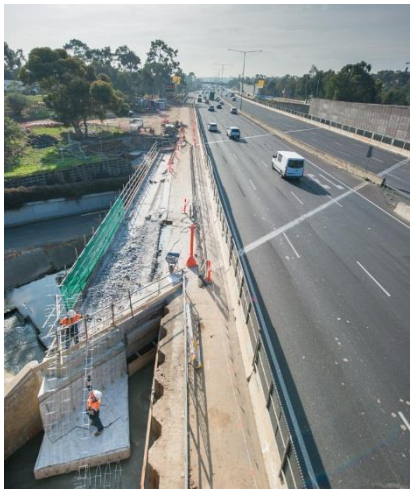

Key Widening Considerations Continued

- Abutments & retaining walls:
  - Temporary ground retention:
    - Sheet piles
    - Soil nail walls
  - Permanent soil nail wall (MPC2)
  - Cement stabilised sand:
    - Reduced lateral loading
    - Eliminated compaction

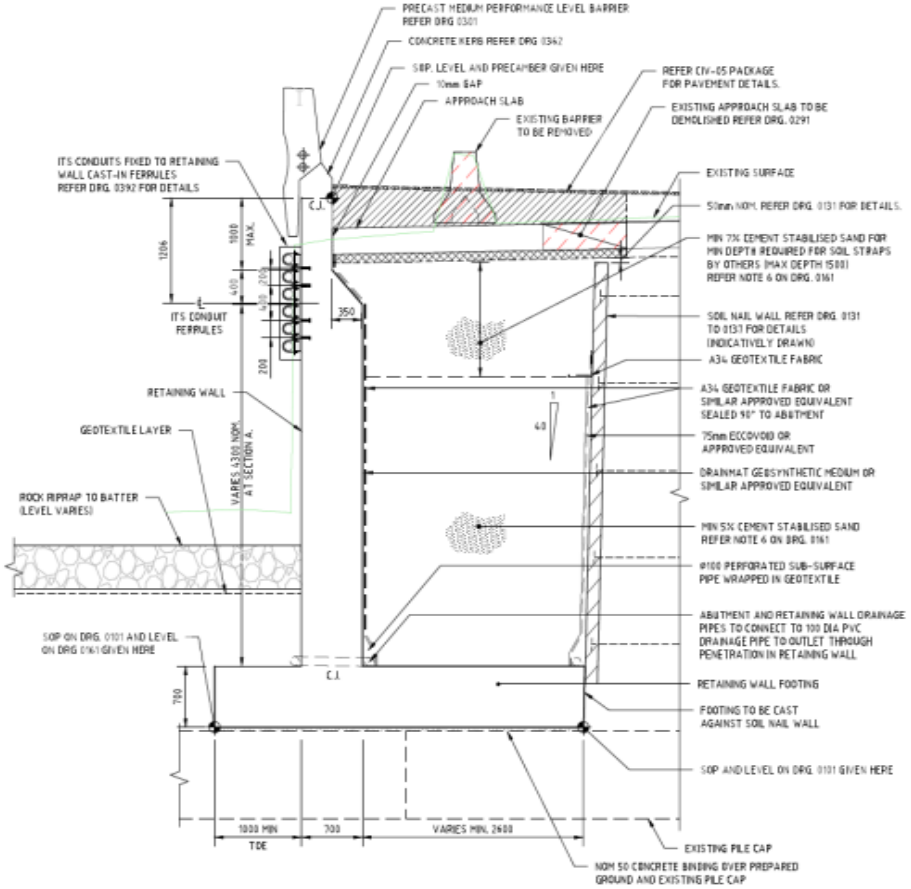

Existing Bridge Load Rating & Strengthening

- Design Loading:
  - Existing bridge:
    - T44/L44
    - 62.5t B-Doubles
  - New widening:
    - T44/L44 or SM1600

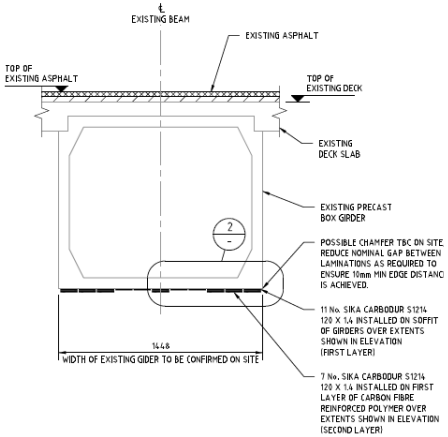

- Deficiencies & strengthening:
  - Box girder flexure:
    - CFRP
  - I-girder / deck interface shear:
    - Vertical bars connecting girders & deck
  - Abutment footing shear & stem flexure:
    - Thickening of abutment footing

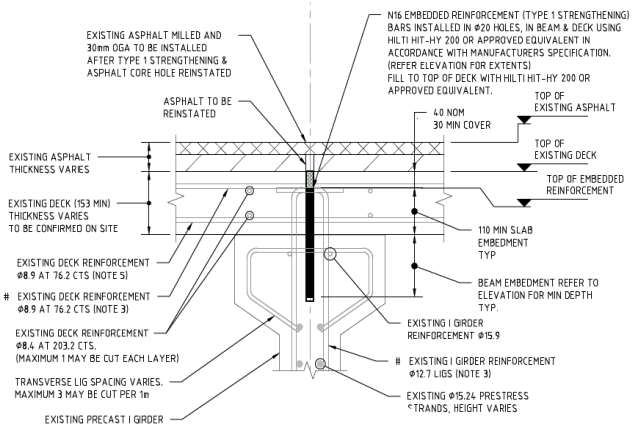

Load Rating & Strengthening Considerations

- Issue – Deficient Abutment Rating Factors:
  - Blade wall & footing
  - Multiple abutments
  - Extensive strengthening & creek flow capacity impacted

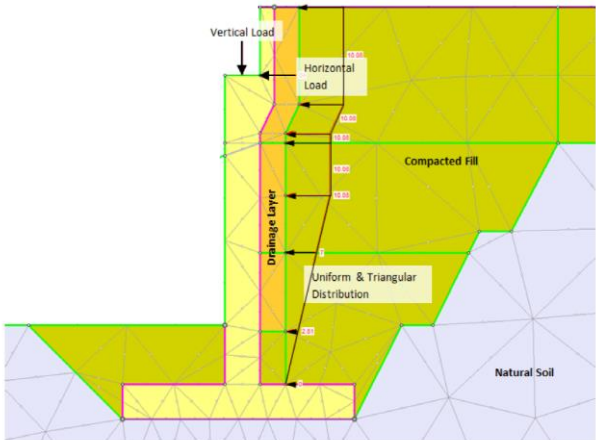

- More refined rating inputs:
  - Decrease lateral loading:
    1. Conservative parameters initially interpreted
    2. Refined FEA soil-structure interaction model developed
  - Increase capacity:
    1. As built drawings concrete strength 28Mpa
    2. Material testing concrete strength 38-46Mpa

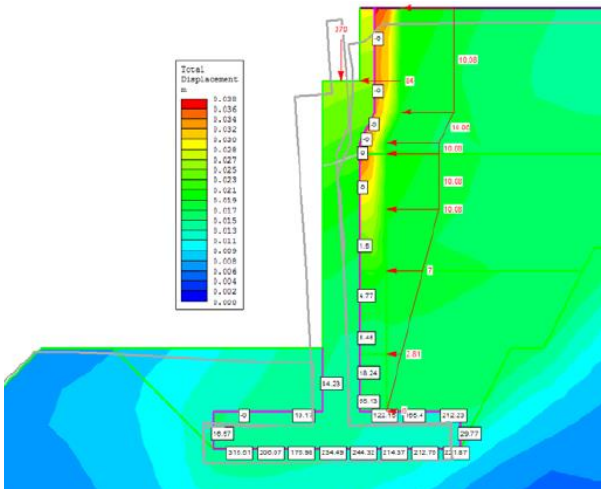

- Outcome:
  - MPC1, MPC2, MPC6 – Strengthening eliminated
  - MPC4 – Strengthening simplified & flow impact eliminated

Load Rating & Strengthening Considerations Continued

- Issue – tensile reinforcement anchorage inadequate:
  - Strengthening difficult to install
  - Common issue for existing bridges of this era with strengthening often not implemented

- Code Comparison:
  - **AS5100.5:2004**

8.1.8.3 *Anchorage of positive moment tensile reinforcement*

Anchorage of positive moment tensile reinforcement shall comply with the following:

(a) At a simple support, sufficient positive moment tensile reinforcement shall be anchored past the face of the support for a length such that the anchored tensile reinforcement can develop a tensile force of $1.5V^*$ at the face of the support, where V^* is the design shear force at a distance d from that face.

  - Demand:
    - 1.5 V*
  - Development beyond:
    - Face of support

  - **AS5100.5:2017 (as per DRAFT AS5100)**

8.2.9.3 *Anchorage of longitudinal reinforcement at exterior supports*

At exterior direct-bearing supports, the longitudinal reinforcement on the flexural tension side of a beam shall be capable of resisting a tensile force of—

$$\phi f_{sy} A_s \geq (V^* - 0.5V_{us} - P_v)\cot(\theta_v) + 0.5N^* \qquad \ldots 8.2.9.3$$

where

ϕ = 0.7 [see Table 2.3.2(c)]

V_{us} = contribution by the transverse reinforcement provided within a length of $d_v\cot(\theta_v)$ from the face of the support where V_{us} shall not exceed V^*

The tension force in the reinforcement shall be developed at the point where a line inclined at angle θ_v (to the longitudinal axis and extending from the inside edge of the bearing area) intersects the centroid of the reinforcement.

  - Demand:
    - Cot θ_v V* ≈ 2 V* ($\theta_v \approx 30^o$)
    - Reduced by V_{us} (transverse reinforcement capacity)
    - Reduced by P_v (prestress vertical component)
  - Development beyond:
    - Inclined line at angle at θ_v extending from face of support

- Outcome:
  - Strengthening requirement for tensile anchorage eliminated using revised Code

Summary

- Moonee Ponds Creek Bridges:
  - Similar structures,
  - Individual constraints and challenges,
  - Unique solutions for each bridge.

- Key considerations:
  - Deck connection:
    - Construction staging
    - Traffic restrictions
    - Structural modelling & detailing
  - Ground retention:
    - Temporary sheet piling
    - Temporary / permanent soil nail walls
  - Tall L-shaped retaining walls
  - Stabilised sand:
    - Reduced lateral load via staged installation
    - Reduced compaction
  - Reduced abutment strengthening:
    - Tie beams
    - FEA soil structure interaction modelling
    - Material testing
  - Beam tensile reinforcement anchorage using new AS5100:2017

CityLink Tulla Freeway Widening Project

Widening of Moonee Ponds Creek Bridges

Bringing ideas to life

Follow us on
www.twitter.com/Aurecon

Join us on
www.facebook.com/Aurecon

Watch us on
www.youtube.com/user/AureconGroup

Follow us on
www.instagram.com/Aurecon

Follow us on
www.linkedin.com/company/Aurecon

Follow us on
www.slideshare.net/Aurecon