Accelerated Bridge Construction for Level Crossing Removal in a High-Traffic Metropolitan Environment

Carla Rossimel, Structural Engineer, Kellogg Brown & Root
James Wong, Principal Structural Engineer, Kellogg Brown & Root

ABSTRACT

The Victorian State Government has committed to removing 75 of the most dangerous and congested level crossings across Melbourne by 2025.

Two of these now completed level crossing removal projects: Buckley Street, Essendon and Camp Road, Campbellfield; were positioned nearby key arterial roads in highly constrained residential areas of Melbourne. Removed as part of the North Western Program Alliance (NWPA), it was imperative that the each bridge was designed to have the least disruption on the community and environment, ensuring that Melbourne was able to keep moving during the works.

This paper discusses the engineering solutions that were developed to minimise construction duration and traffic disruption. In using a similar bridge design to that of Camp Road, the Buckley Street rail bridge benefited from the lessons learned in its design and construction phases, resulting in an optimised design. Whilst challenges specific to the Buckley Street site were encountered, the rail bridge was completed successfully, and kept closure of each track of the Upfield rail line limited to 18 days.

1 INTRODUCTION

The Victorian Government has committed to removing 75 level crossings across Melbourne by 2025, in an attempt to make communities safer and reduce traffic congestion. An Alliance, led by Kellogg Brown & Root (KBR) and John Holland (JH), was awarded the contract to deliver the north-western program of level crossing removals. In 2017, the level crossing at Camp Rd (Campbellfield) was successfully removed by the Alliance, followed by Skye Rd (Frankston) and Buckley St (Essendon) in 2018.

This paper discusses the level crossing removal at Buckley St, where a road under rail solution was adopted. It discusses the utilisation of lessons learned on the Camp Road project, whereby the design and construction phases of the project were optimised. As such, an accelerated bridge construction program was successfully met within the urban environment.

1.1 Project Background

Buckley St is one of the key arterial roads in Melbourne's inner north-west, connecting Keilor and Avondale Heights in the west with Mt Alexander Rd in the east. With the level crossing located within a 300 m radius of three schools, five churches, and the Essendon train station, the site constituted a highly constrained, high traffic metropolitan environment. Before the removal of the level crossing, boom gates were down for an average of 78 minutes during the morning peak, impacting the 11,000 vehicles that used the road each day (Your Level Crossing, 2019).

Figure 1. The Buckley St level crossing located in a highly constrained metropolitan environment (*Source: Your Level Crossing, 2019*)

As such, there was significant effort in ensuring that the grade separation could be constructed in a manner that offered least impact on the active community. In an Alliance context, the design team were able to work alongside the construction team, asset owners and asset maintainers to ensure a positive project outcome was achieved.

1.2 Design Solution

The design solution lowered approximately 250 metres of Buckley Street to a maximum depth of 5.5 m below the existing rail line, allowing three lanes of traffic to flow underneath operating trains.

With the Camp Road level crossing recently removed by the Alliance, the design team adopted a similar bridge design. That is, 36 No. 1050 mm diameter continuous flight auger (CFA) piles were constructed during a rail occupation over six days, locally removing sleepers and piling between the existing track. With the piles installed in between existing tracks, track did not need to be cut. Using this top-down construction approach meant that steel plates could be placed over the top of the piles, such that trains could start running whilst the pile was curing.

With the piles in position, the 13.8 m span reinforced bridge deck was poured in-situ, such that an integral connection was developed with the CFA piles. Such portal-frame action between the CFA piles and bridge deck meant that the bridge deck could be much thinner (and therefore, less resource-intensive) than a simply-supported deck.

As the deck was 30 m wide, works were phased such that the Track 1 bridge deck was built whilst Tracks 2 and 3 were running, followed by the Track 2 and 3 bridge deck built whilst Track 1 was running. This construction staging meant that the Craigieburn line always had one track open, meaning services through Essendon did not have to be completely suspended. As such, a construction joint was provided between the two sections of bridge deck, ensuring that the two decks behaved structurally together.

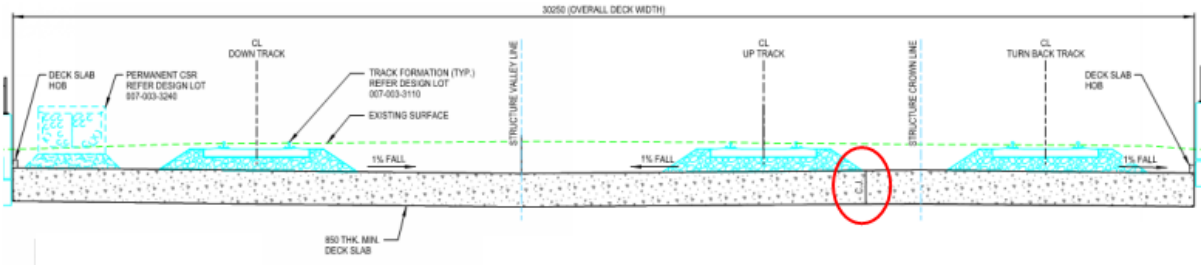

Figure 2. Section view of the rail bridge deck, demonstrating the position of the construction joint

Whilst the 850 mm deep bridge deck was curing, excavation of Buckley St commenced in lifts. After each lift, strip drains were installed, followed by a 150 mm thick shotcrete infill wall spanning between piles. This technique ensured that the soil behind the wall was adequately supported during the excavation.

Once the road was built beneath the structure, precast architectural panels were lifted and positioned atop road barriers to create an underpass that spoke to the urban design initiative. In creating a digital abstraction of a traditional hedge-lined path, the urban designers aimed to establish a connection with the original garden setting of the site.

Figure 3. Completed rail bridge, traversing atop Buckley St. (Note orientation identical to that of Figure 1, demonstrating the site before and after the grade separation).

2 VALUE ENGINEERING

As discussed previously, the benefits of working in an Alliance means that the overall lifecycle of the project can be discussed with stakeholders throughout all design phases. Working closely with the construction team meant that the impact the bridge design had on the construction method and duration (and thus, disruption to the community) could be considered early in the design process.

A number of Value Engineering Workshops were held between JH and KBR in the early phases of the project, whereby design alternatives were discussed and considered. A number of these are explained below.

2.1 Optimisation of Deck-Pile Connection

During the Camp Road bridge construction, it was found that the integral deck-pile connection was a significant risk item for the construction team. With a vertical projection of up to 500 mm out of the CFA pile (designed for use with both a threaded coupler and a mechanical coupler), combined with an N36 bar of $10d_b$ curvature, it was very difficult to install the N36 bar and achieve adequate deck cover.

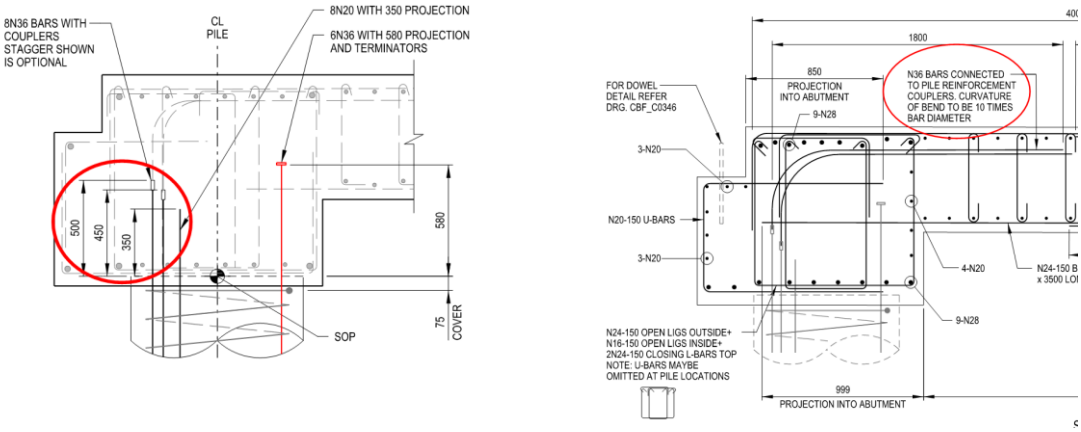

Figure 4. Camp Rd bridge deck-pile connection design, whereby the large vertical projection out of the pile made it difficult to connect curved N36 deck bars.

With this advice provided to the Buckley St design team early, the projection out of the CFA pile was limited to 250 mm, designing only for use with a threaded coupler. On the Camp Rd project, it was found that mechanical couplers were not ideal, given the large amount of torque required to secure the large coupler. As such, threaded couplers were the preferred option on Buckley St, which allowed the connection to be optimised.

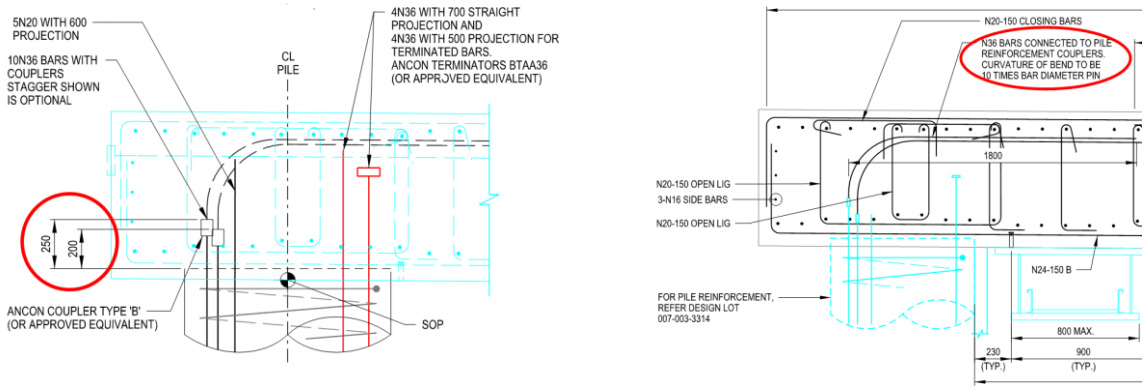

Figure 5. Buckley St rail bridge deck-pile connection design, whereby the vertical projection out of the pile was minimized, resulting in an easier connection with the curved N36 deck bars.

A design alternative of lapping bars in this location (and thus removing the couplers) was considered. However, due to the large N36 bars needed, lapped bars would prove too long and too heavy to construct within an accelerated program.

2.2 Removal of Crosshead

At Preliminary Design, a 1400 mm wide abutment crosshead (connecting the bridge deck to the CFA piles) was presented. The purpose of this widened abutment is to create a moment connection, whereby the large bending moment can be carried by the thickened crosshead.

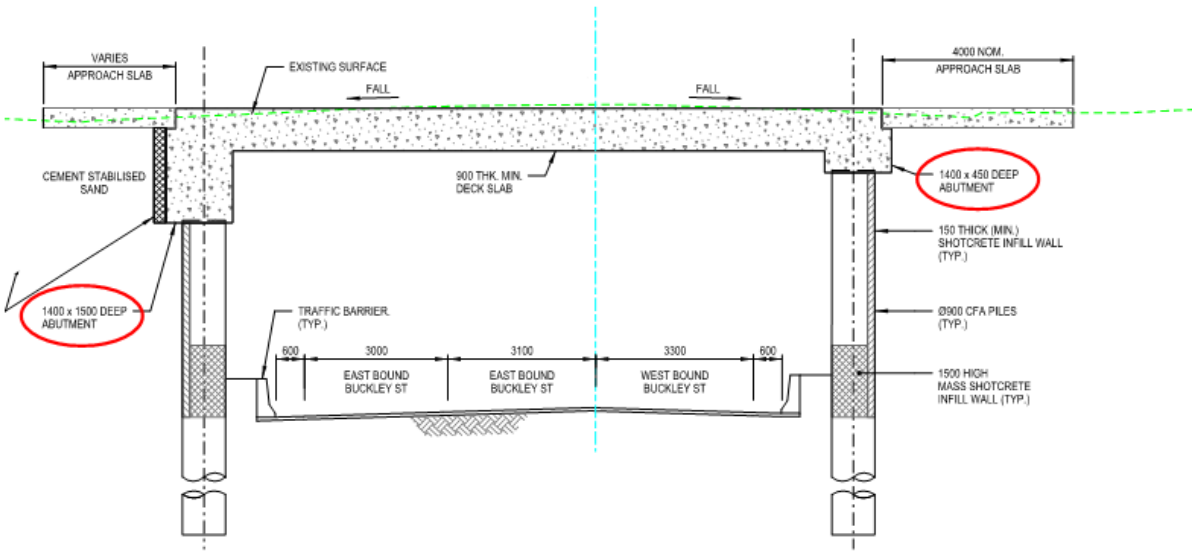

Figure 6. Preliminary design of the Buckley St rail bridge, proposing a 1400 mm wide crosshead to carry the bending moment from the deck into the pile.

The construction team communicated that such additional element resulted in a longer construction program, due to the additional excavation and formwork needed for the crosshead. Furthermore, the practicalities of personnel entering a 1.5 m high trench to secure couplers proved undesirable.

With the project goal of keeping the rail line closed for the minimum amount of time, it was decided that the crosshead shall be removed, even if it meant that the deck would become thicker.

2.3 Removal of Approach Slabs

The edge of the rail bridge is positioned close to an existing pedestrian underpass at the north. The project was scoped such that the rail bridge would be built without negatively affecting the existing masonry structure. As such, a number of conversations were held, to determine the most effective way of:

a) structurally isolating the rail bridge from the existing underpass
b) providing a smooth transition onto the rail bridge.

With the underpass positioned 2.2 m from the bridge structure, the project had to deviate from MTM's Track and Structures Bridge Standard, requiring underbridges to include approach slabs (of minimum length 4 m) at each end of a bridge. As such, the Alliance considered a number of alternative options.

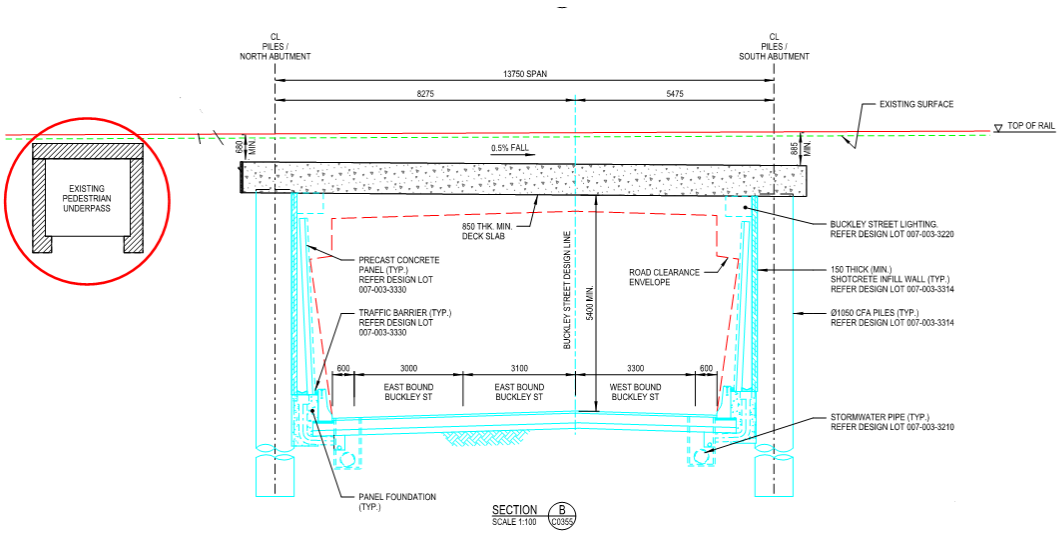

Figure 7. Location of existing masonry pedestrian underpass in relation to the rail underbridge

The provision of compressible sleeves around the piles was considered. With a compressible material absorbing horizontal loads coming from the rail bridge, one could argue that the loading condition of the existing underpass would remain constant. However, due to the construction methodology, staging, and reliance on CFA piling to limit the rail occupation duration, the installation of compressible sleeves was not possible.

A 2 m approach slab at the northern end of the structure was considered. However, this option was ruled out, as it was found that the lateral pressure occurring at the northern end of the shortened approach slab would induce horizontal pressures on the existing underpass, affecting its current loading condition. Similarly, this option was deemed not acceptable.

As such, a hybrid solution was developed, whereby the horizontal loads were absorbed, and a smooth transition could be provided onto the bridge. This solution is as documented in Figure 8 below, whereby a 50 mm thick compressible material is provided for the full height of the underpass, and backfilled with cement stabilized sand. Whilst the compressible material absorbs the horizontal loads, a geotechnical analysis (using a Plaxis 2D Finite Element Model) demonstrated that the cement stabilized sand has sufficient vertical strength to prevent significant differential settlement of

the track. That is, the net differential vertical movement between the underpass, bridge and soil zone was found to be less than 3 mm, and thus, acceptable.

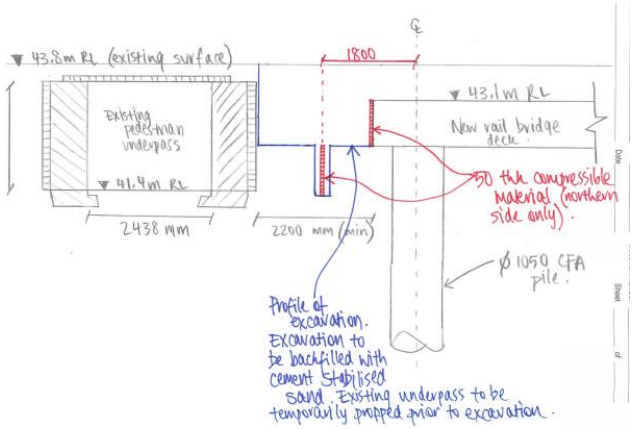

Figure 8. Design solution adopted at the northern abutment to account for the existing underpass structure.

Given an integral bridge structure, maintaining bridge symmetry was important. An asymmetrical integral bridge would make the structure more likely to experience ratcheting, meaning that the structure would move toward one abutment. Resulting in increased serviceability and maintenance issues, it was deemed that approach slabs would not be included on either side of the structure.

3 BRIDGE CONSTRUCTION

Whilst measures were taken during the design phase to ensure that the bridge could be constructed in the most efficient way possible, a number of techniques were employed to decrease the risk of schedule blow-out during construction.

3.1 Parametric Modelling

As discussed in Section 2.1, construction of the deck-pile interface proved difficult on Camp Rd, and the redesign of reinforcement during construction had a detrimental effect on the construction schedule. In recycling a previously-constructed bridge design and understanding its inherent difficulties, the connection design was both optimized and checked to ensure it could all fit in place. 3D modelling was performed via the use of parametric modelling, allowing the design to be efficiently checked and adjusted.

Due to the iterative nature of reinforcement design when located in congested environments, a plug-in to AecoSim was used (GenerativeComponents) to efficiently model components that changed during the design process. Adoption of this software created a faster design development process, and accelerated clash detection processes. Furthermore, parametric modelling ensured that the reinforcement would both fit within the connection, and allow concrete to flow through it. Given the assembly of the reinforcement was understood, all bars were able to be assembled onsite, with no rework required. This ensured the construction schedule could be met.

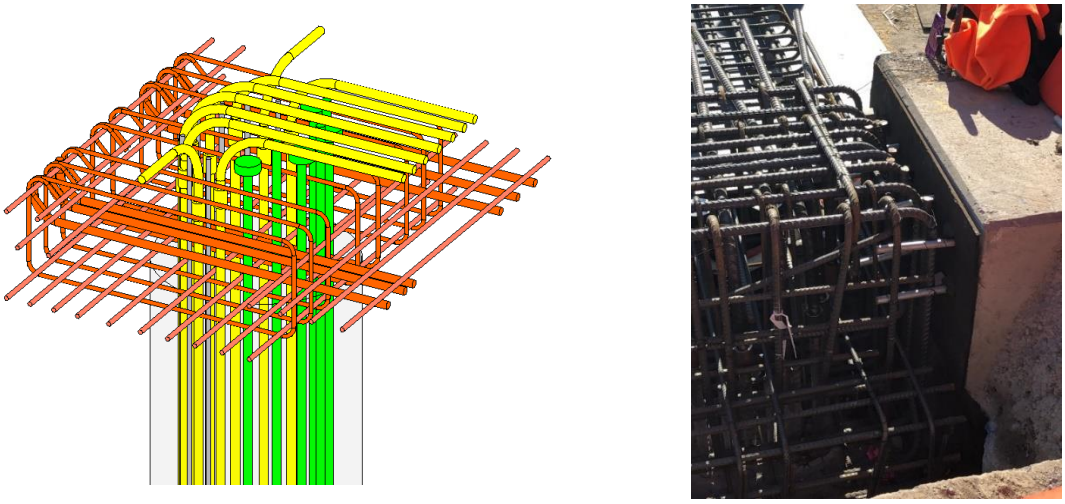

Figure 9 (a) Parametric modelling of the deck-pile connection and (b) Actual deck-pile connection on site.

3.2 Heating the Bridge Deck

Constructing the deck of the rail bridge constituting Tracks 2 & 3 was critical, as two tracks were closed to trains during this period. As such, it was imperative that the deck was built to schedule, with no delays.

On the day that this deck was to be poured, it was found that Melbourne's temperature was to dip to below 5°C at the time of concrete pour. The Vicroads Specification states *"concrete shall not be placed in the works when the air temperature measured at the point of placement is below 5°C".*

Given the time-critical nature of this concrete pour, it was agreed that mitigation measures could be employed to ensure the air temperature remained above 5°C, and the 320 m^3 of concrete could be poured. These mitigation measures included 3 No. temperature monitoring probes, thermal blankets, keeping the concrete and its materials above 5°C (by use of silos) and ensuring the reinforcement was kept above 12°C by using 14 No. jet fan blow heaters.

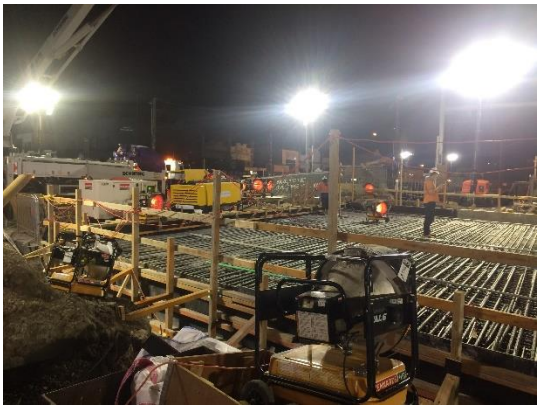

Figure 10. Heating of the Tracks 2 & 3 bridge deck using 14 No. jet fan blow heaters.

This technique allowed the ballast and sleepers to be placed on the bridge deck according to the construction schedule, ensuring the tracks were opened on time.

4 CONCLUSION

This paper has presented an accelerated bridge construction for a level crossing removal in a high-traffic metropolitan environment. In adopting a bridge design similar to one previously executed by the Alliance, learnings were transferred, resulting in a more efficient level crossing removal.

Given the success of the Alliance (and thus, the award of additional level crossing removal projects) is dependent on the successful delivery of previous projects, the use of repeatable designs is of high importance. If the Alliance is continually able to deliver the level crossing removals in challenging environments, a significant number of the 75 grade separations in metropolitan Melbourne may be successfully removed by NWPA by the targeted 2025 date.

5 REFERENCES

- AS 5100 – 2017, Australian Standard, Bridge Design
- KBR, Buckley Street – Rail Bridge Superstructure Design Basis Report, NWP-007-C-NWA-REP-00-ESD-CBR-0005 Rev. 0, 7/6/2018
- KBR, Buckley Street – Rail Bridge Substructure Design Basis Report, NWP-007-C-NWA-REP-00-ESD-CBR-0002 Rev. 0, 18/4/2018
- Your Level Crossing - https://your.levelcrossings.vic.gov.au/buckley-street-essendon?tool=qanda, accessed 4/2/2019
- Vicroads Standard Specification 610 – Structural Concrete, published 20/11/2018

6 ACKNOWLEDGEMENTS

The author wishes to acknowledge the support and permission of the Level Crossing Removal Authority, Metro Trains Melbourne, John Holland, Foundations Specialist Group and Kellogg Brown & Root.

7 AUTHOR BIOGRAPHIES

Carla Rossimel is a structural engineer with five years of experience in project management and structural engineering within the mining, oil and gas, maritime and bridge sectors. Through her time at KBR, Carla has worked on a number of transport projects, designing a number of road, rail and pedestrian bridges.

James Wong is a Principal Structural Engineer for the KBR Victoria Office and is the Lead Structural Engineer of the Buckley Street and Bell & Moreland Railway Crossing Removal Projects. He is a Chartered Professional Engineer of Engineers Australia with over 18 years of extensive experience in engineering, construction and management across infrastructure, power and resource sectors.