GENERATOR PROTECTION OVERVIEW

33RD ANNUAL
HANDS-ON
Relay School
MARCH 14–18, 2016
PULLMAN, WASHINGTON

BECKWITH ELECTRIC CO. INC.

160118

Presenter Contact Info

Wayne Hartmann

VP, Protection and Smart Grid Solutions
Beckwith Electric Company
whartmann@beckwithelectric.com
904-238-3844

Wayne Hartmann is VP, Protection and Smart Grid Solutions for Beckwith Electric. He provides Customer and Industry linkage to Beckwith Electric's solutions, as well as contributing expertise for application engineering, training and product development.

Before joining Beckwith Electric, Wayne performed in application, sales and marketing management capacities with PowerSecure, General Electric, Siemens Power T&D and Alstom T&D. During the course of Wayne's participation in the industry, his focus has been on the application of protection and control systems for electrical generation, transmission, distribution, and distributed energy resources.

Wayne is very active in IEEE as a Senior Member serving as a Main Committee Member of the IEEE Power System Relaying Committee for 25 years. His IEEE tenure includes having chaired the Rotating Machinery Protection Subcommittee ('07-'10), contributing to numerous standards, guides, transactions, reports and tutorials, and teaching at the T&D Conference and various local PES and IAS chapters. He has authored and presented numerous technical papers and contributed to McGraw-Hill's "Standard Handbook of Power Plant Engineering, 2nd Ed."

Generator Construction: Simple Bock Diagram

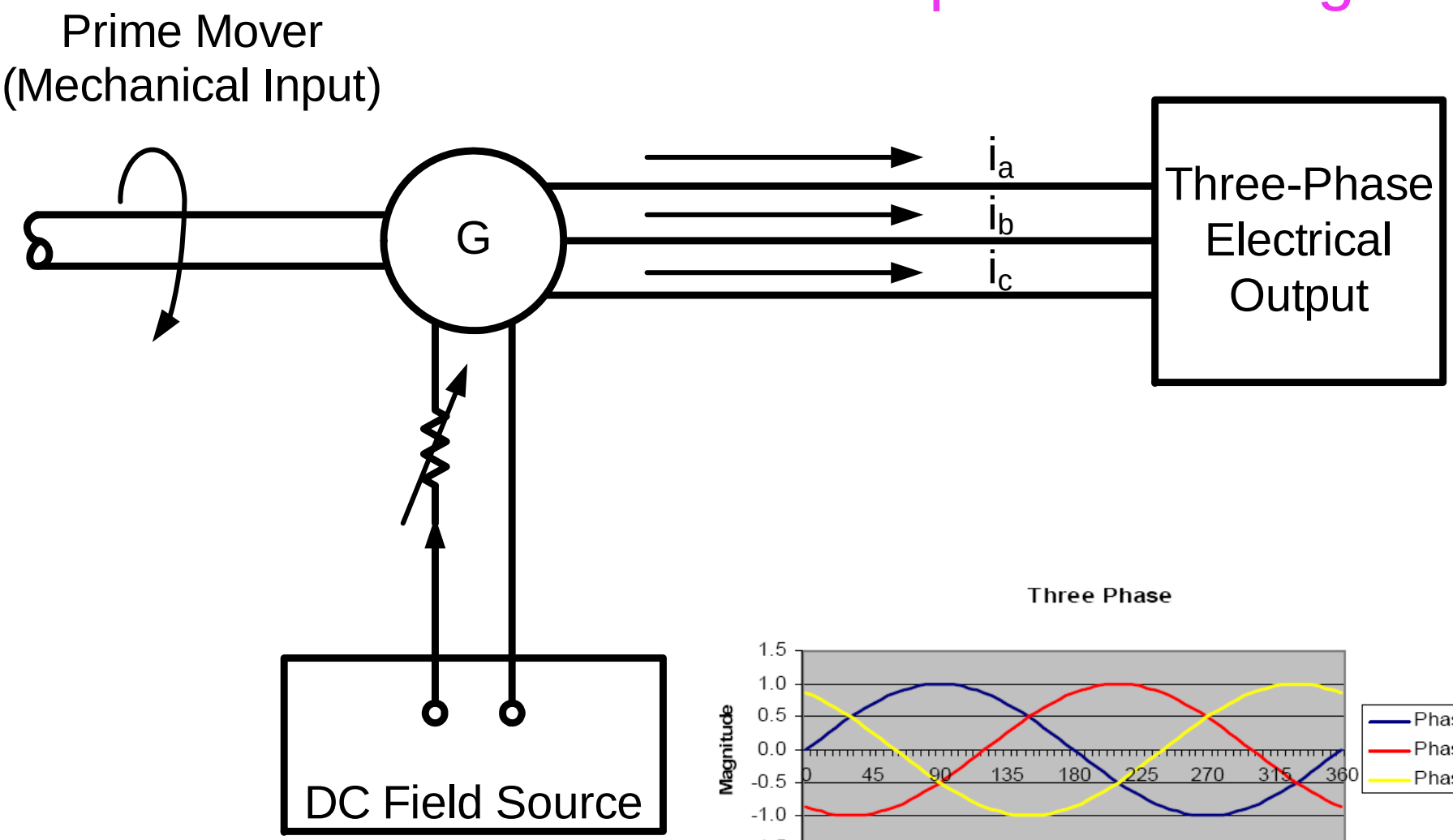

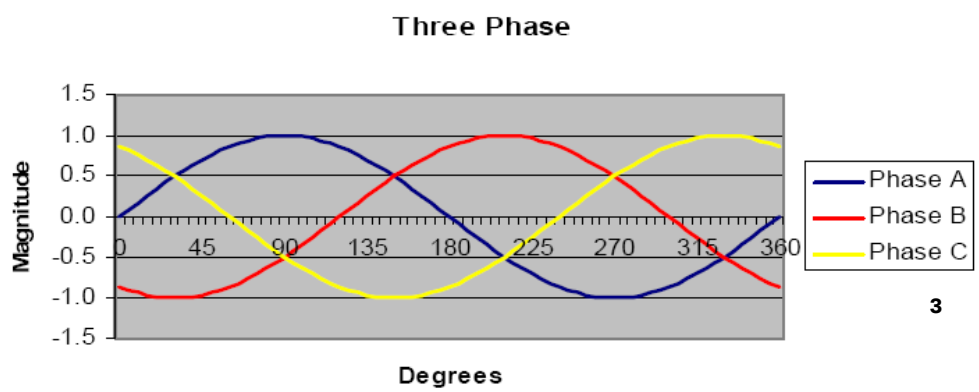

Applying Mechanical Input

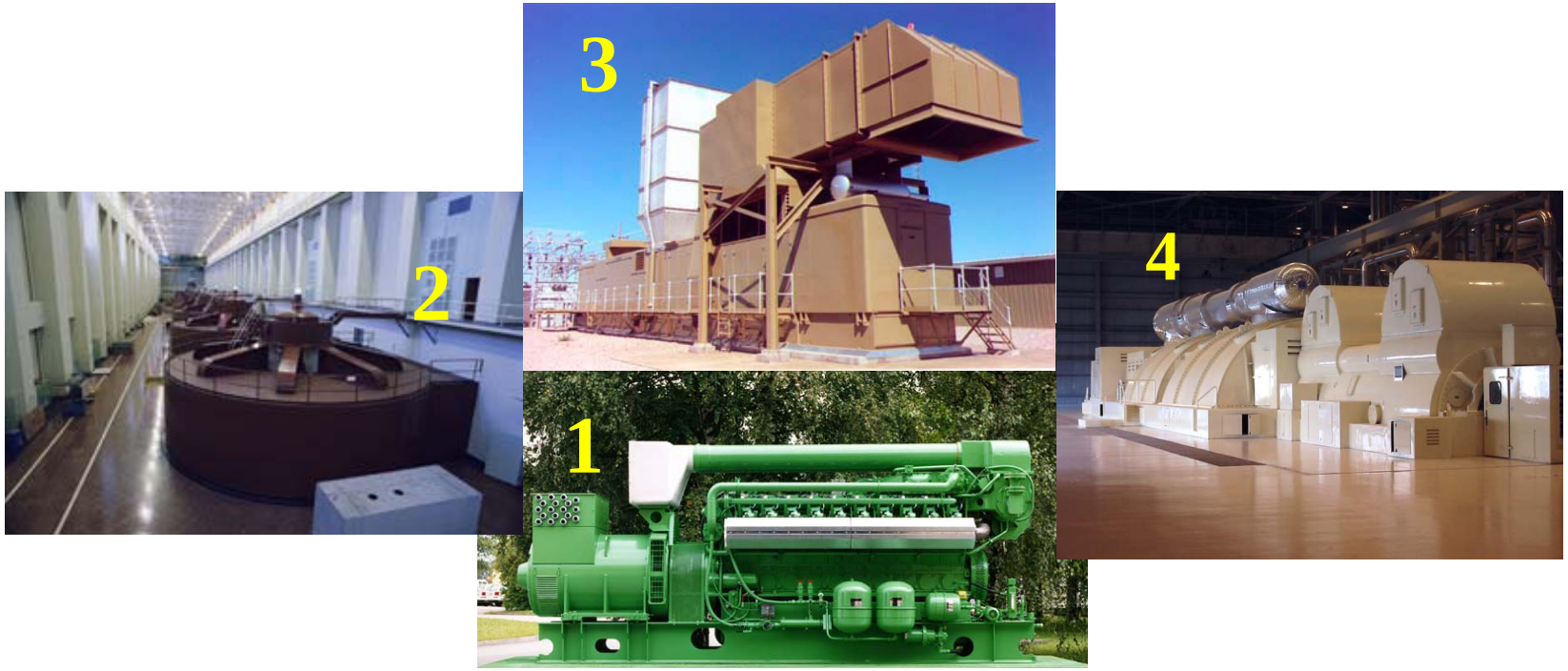

1. Reciprocating Engines
2. Hydroelectric
3. Gas Turbines (GTs, CGTs)
4. Steam Turbines (STs)

Applying Field

Static Exciter

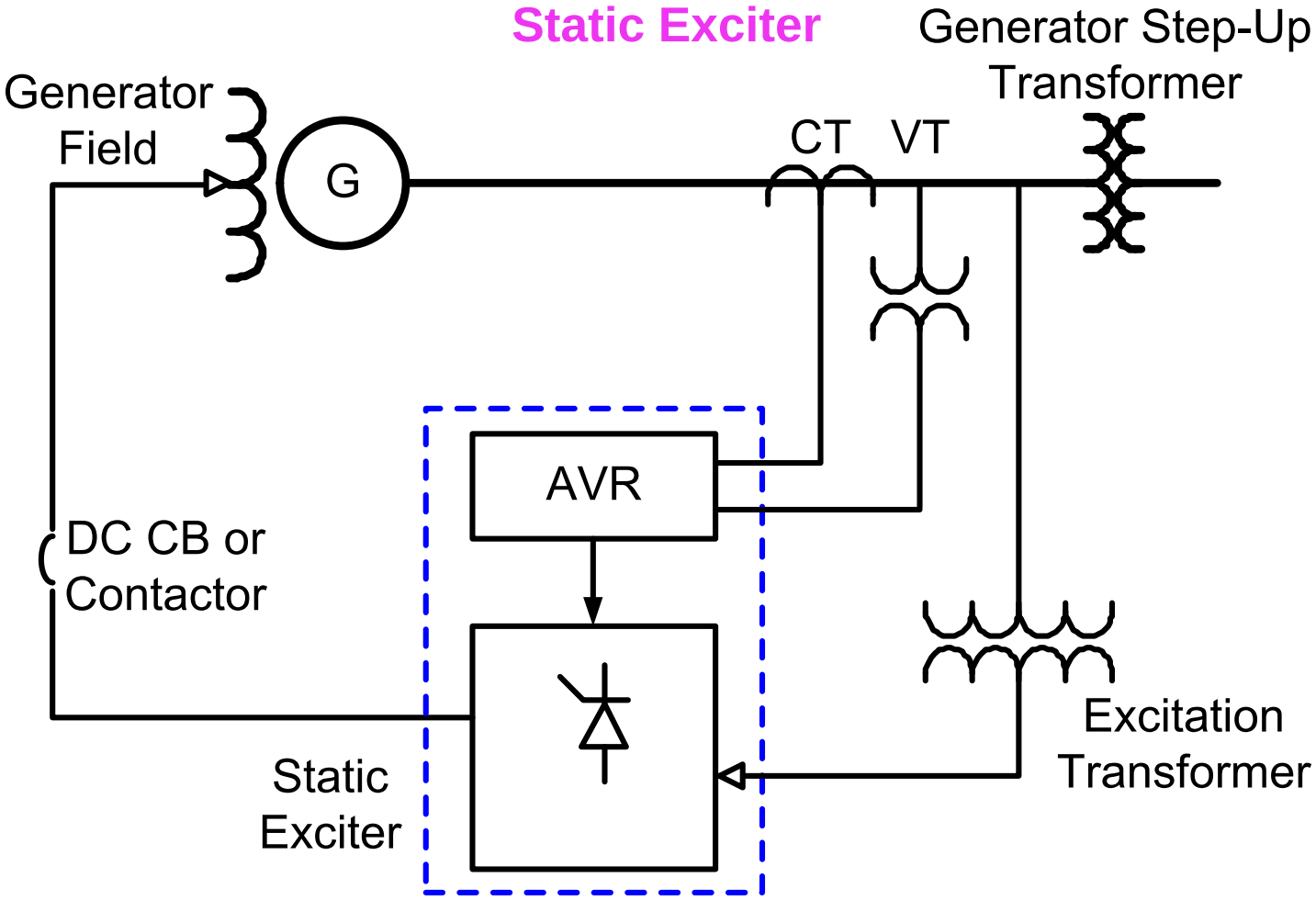

- DC is induced in the rotor
- AC is induced in the stator

Rotor Styles

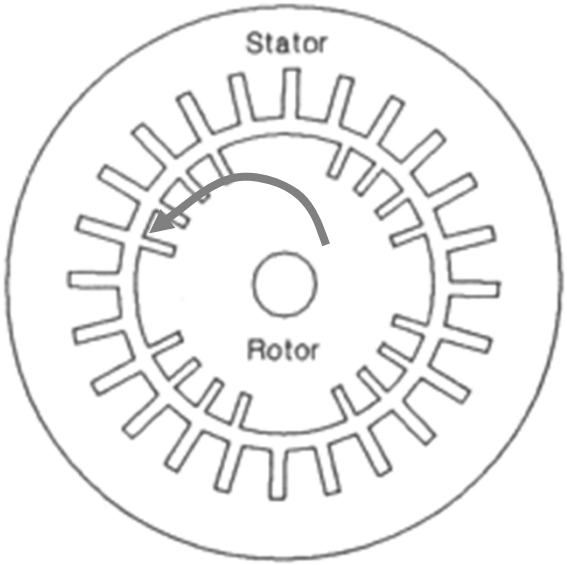

Cylindrical (Round)

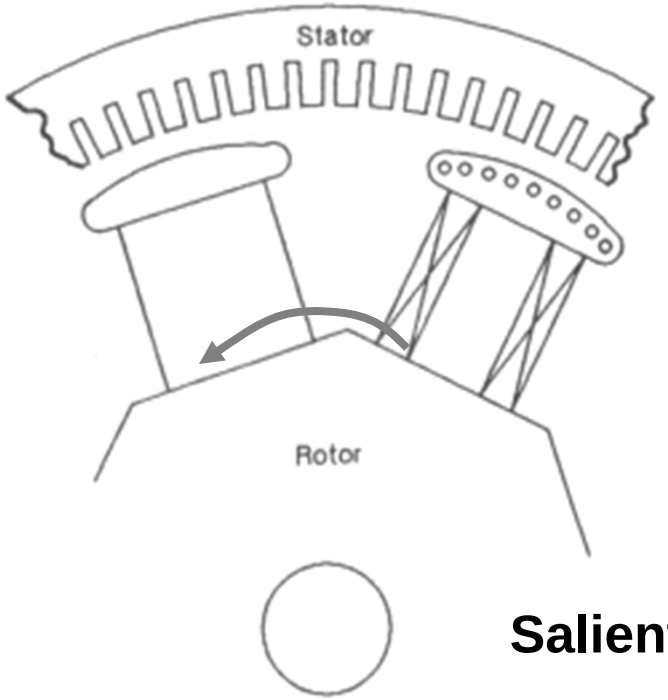

Salient

- Cylindrical rotor seen in Recips, GTs and STs
- Salient pole rotor seen in Hydros
  - More poles to obtain nominal frequency at low RPM
  - Eq: f= [RPM/60] * [P/2] = [RPM * P] / 120

Cylindrical Rotor & Stator

Salient Pole Rotor & Stator

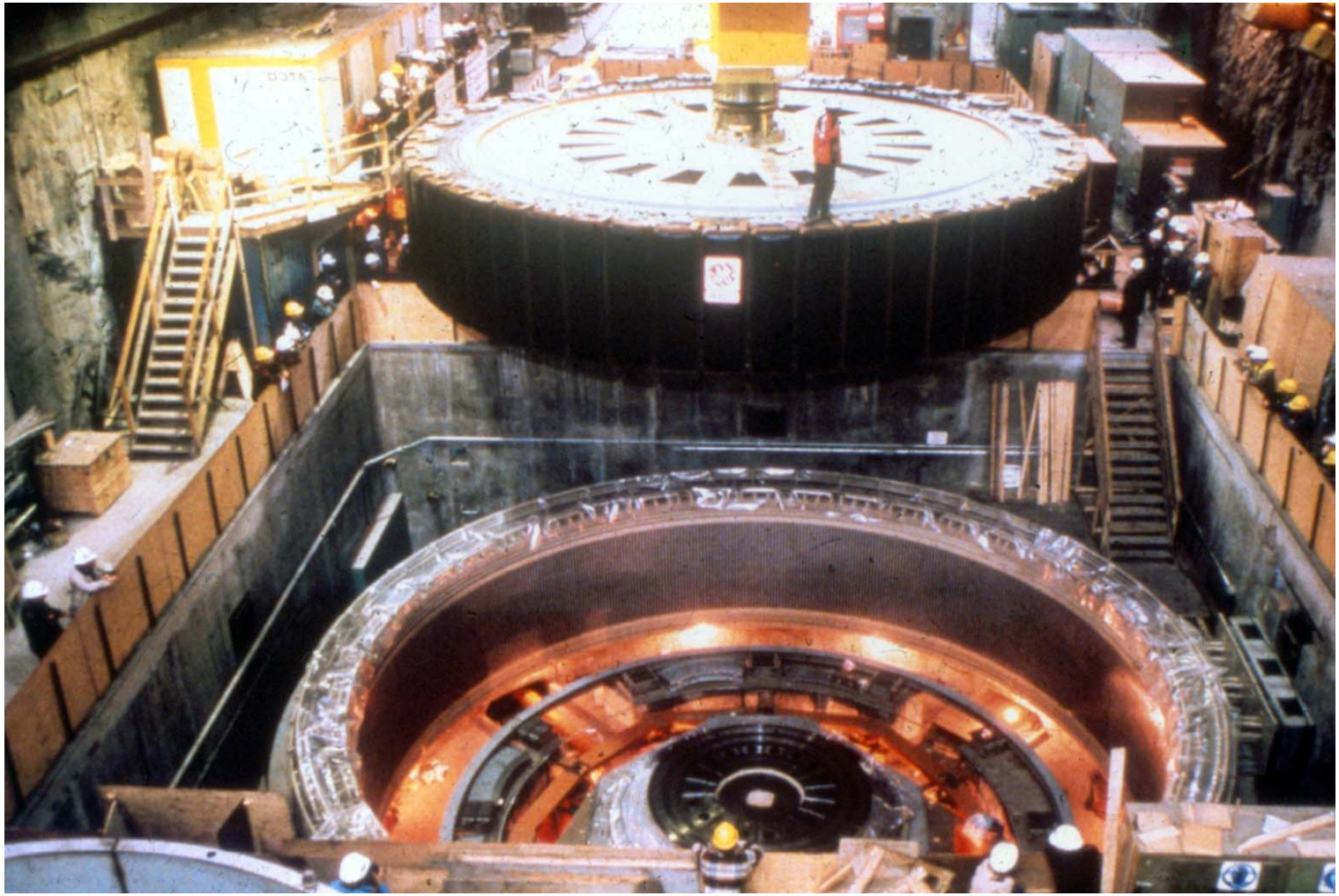

Generator Behavior During Short Circuits

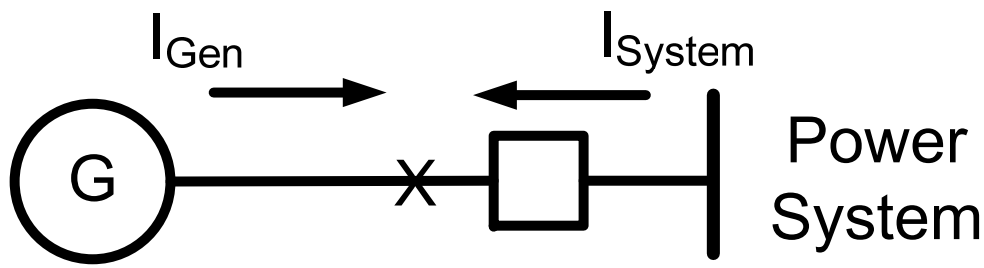

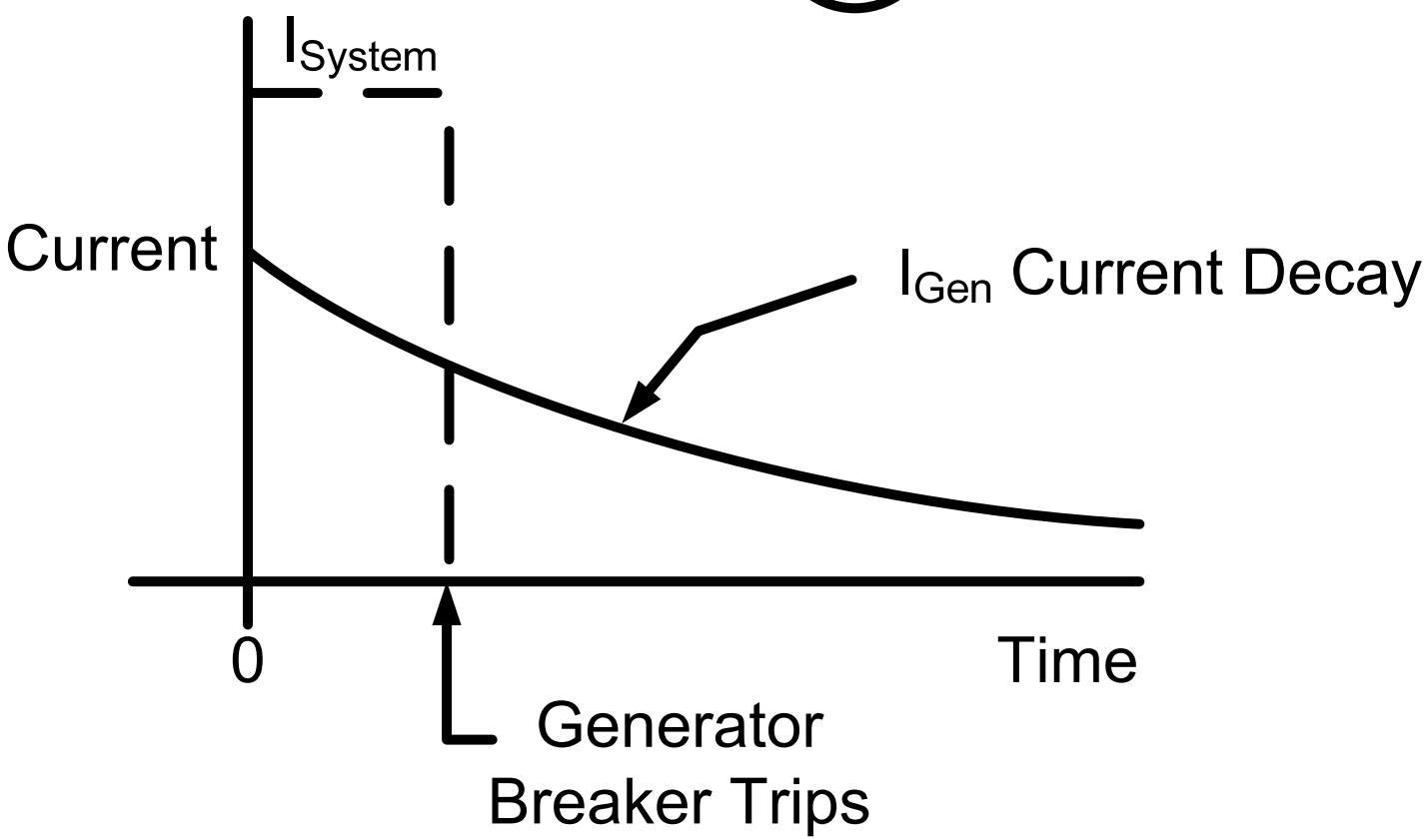

Generator Short-Circuit Current Decay

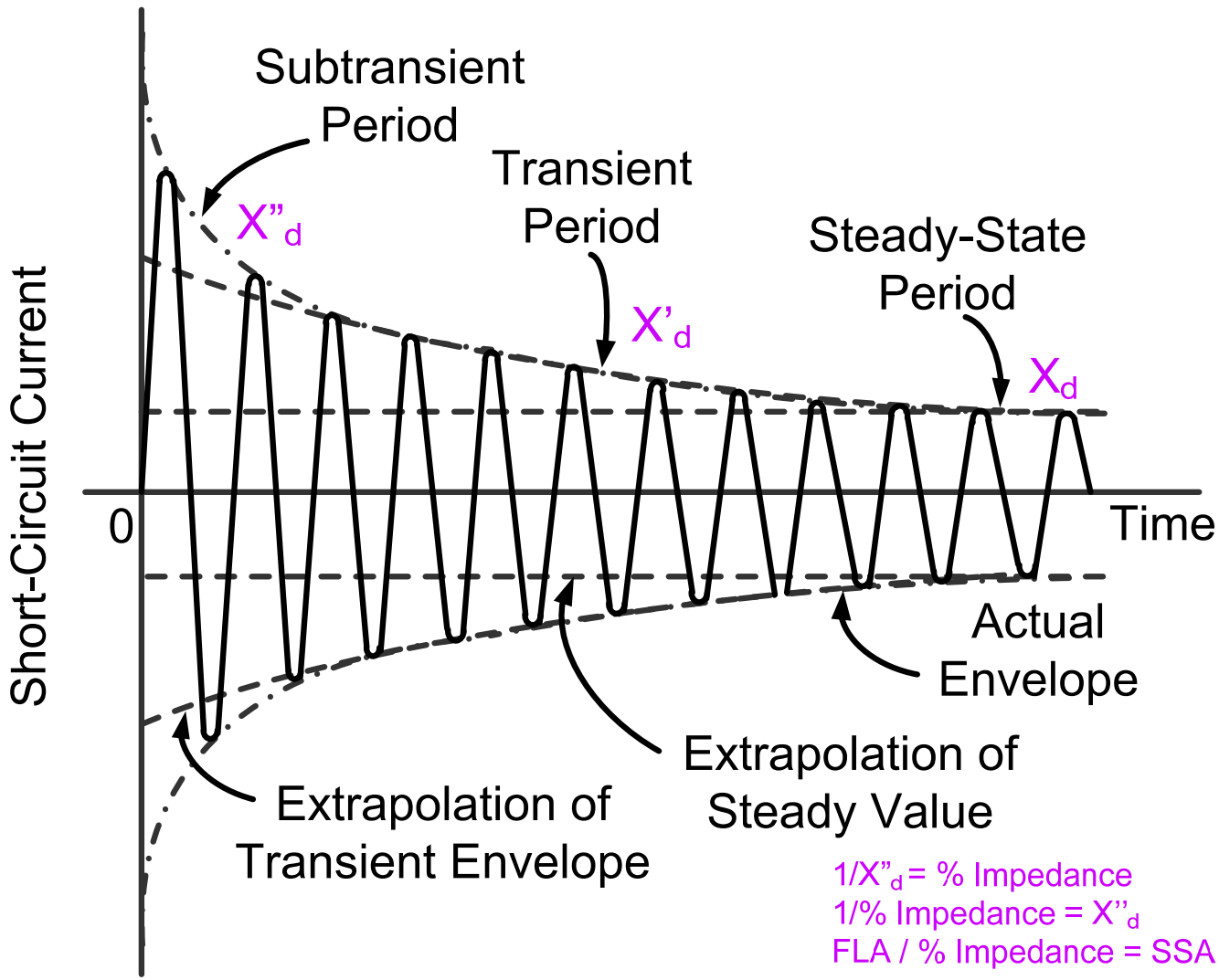

$1/X''_d$ = % Impedance
1/% Impedance = X''_d
FLA / % Impedance = SSA

Effect of DC Offsets

Three-Phase Fault

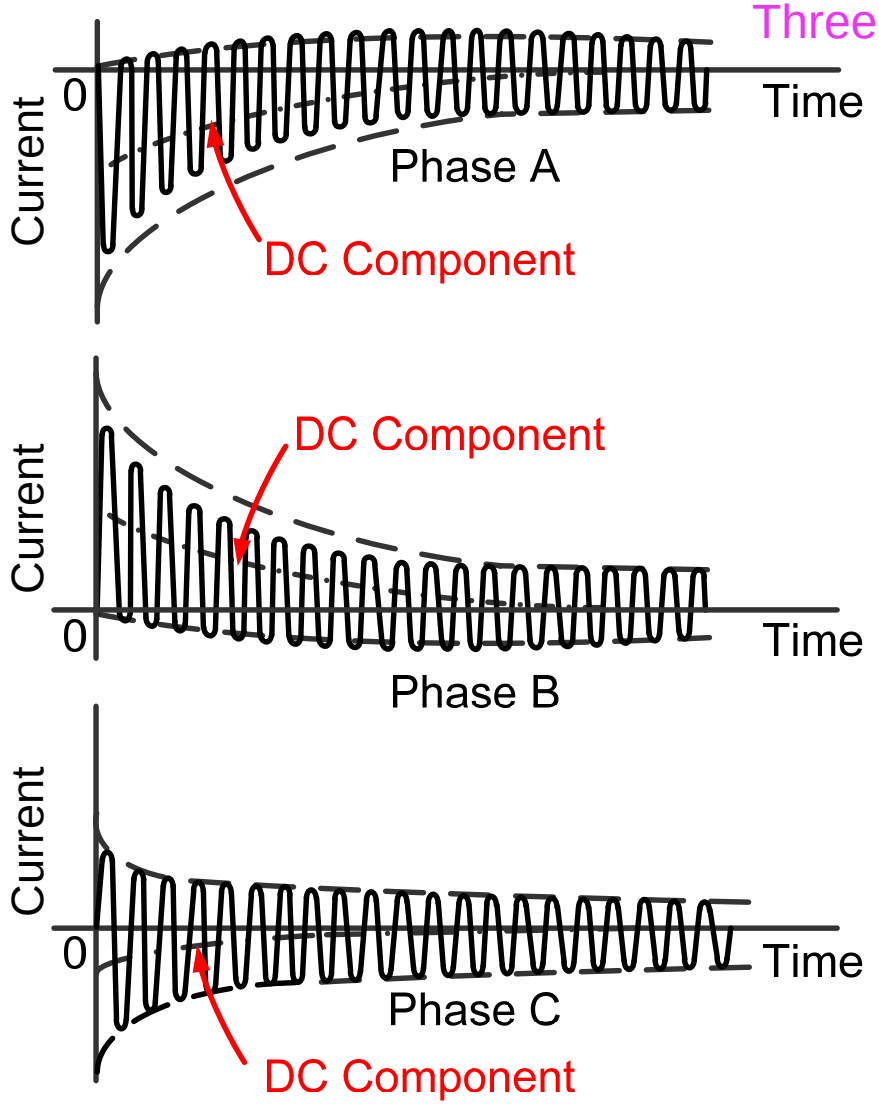

Grounding Techniques

- Why Ground?
  - Improved safety by allowing detection of faulted equipment
  - Stop transient overvoltages
    - Notorious in ungrounded systems
  - Ability to detect a ground fault before a multiphase to ground fault evolves
  - If impedance is introduced, limit ground fault current and associated damage faults
  - Provide ground source for other system protection (other zones supplied from generator)

Types of Generator Grounding

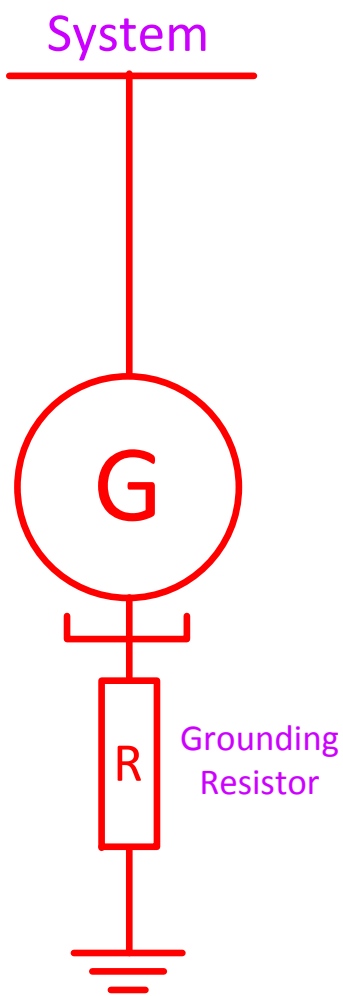

- Low Impedance
  - Good ground source
    - The lower the R, the better the ground source
    - The lower the R, the more damage to the generator on internal ground fault
  - Can get expensive as resistor voltage rating goes up
  - Generator will be damaged on internal ground fault
    - Ground fault current typically 200-400 A

Types of Generator Grounding

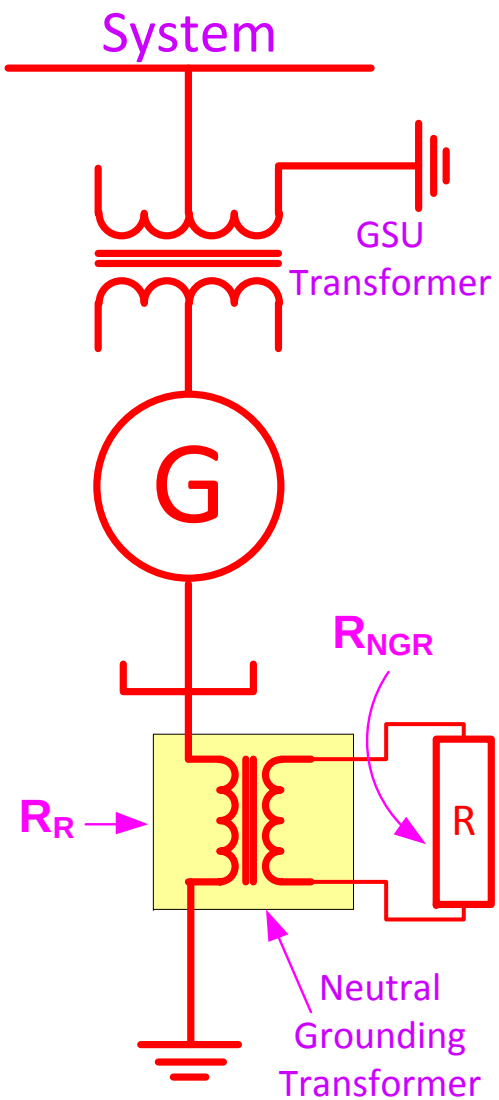

- High Impedance
  - With delta/wye GSU, creates "unit connection"
  - System ground source obtained from GSU
  - Uses principle of reflected impedance
    - Eq: $R_{NGR} = R_R / [V_{pri}/V_{sec}]^2$
      - R_{NGR} = Neutral Grounding Resistor Resistance
      - R_R = Reflected Resistance
    - Ground fault current typically <=10A

Types of Generator Grounding

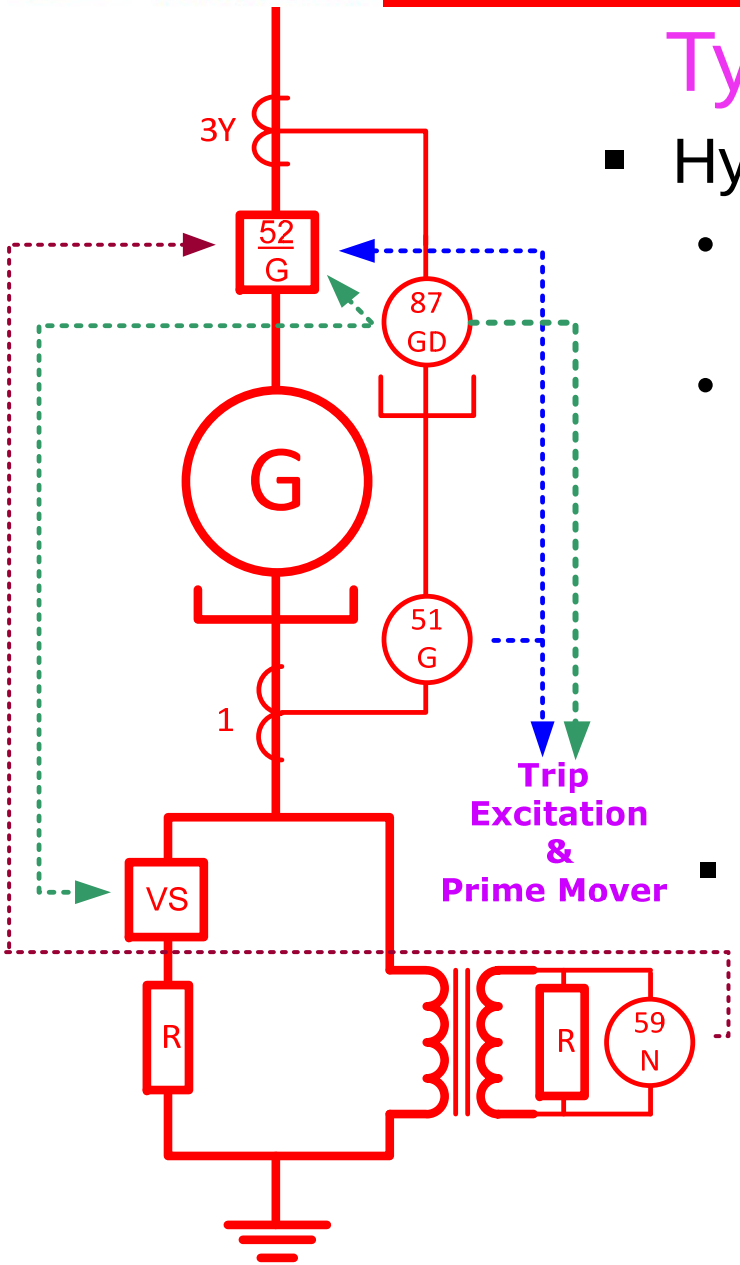

- Hybrid Impedance Grounding
  - Has advantages of Low-Z and High-Z ground
  - Normal Operation
    - Low-Z grounded machine provides ground source for other zones under normal conditions
      - 51G acts as back up protection for uncleared system ground faults
      - 51G is too slow to protect generator for internal fault
- Ground Fault in Machine
  - Detected by the 87GD element
  - The Low-Z ground path is opened by a vacuum switch
  - Only High-Z ground path is then available
    - The High-Z ground path limits fault current to approximately 10A (stops generator damage)

Types of Generator Grounding

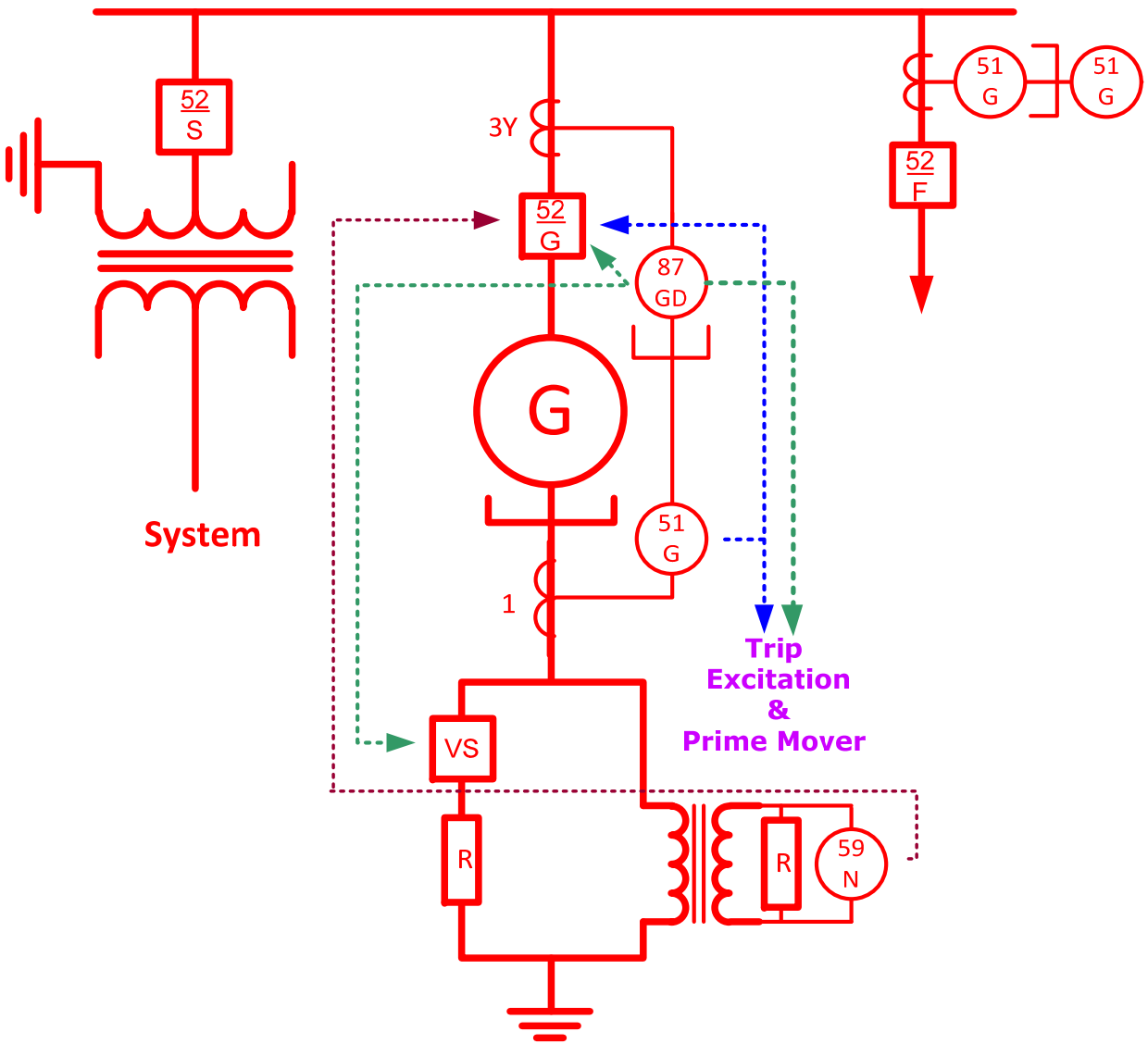

Types of Generator Ground Fault Damage

- Following pictures show stator damage after an internal ground fault
- This generator was high impedance grounded, with the fault current less than 10A
- Some iron burning occurred, but the damage was repairable
- With low impedance grounded machines the damage is severe

Stator Ground Fault Damage

Stator Ground Fault Damage

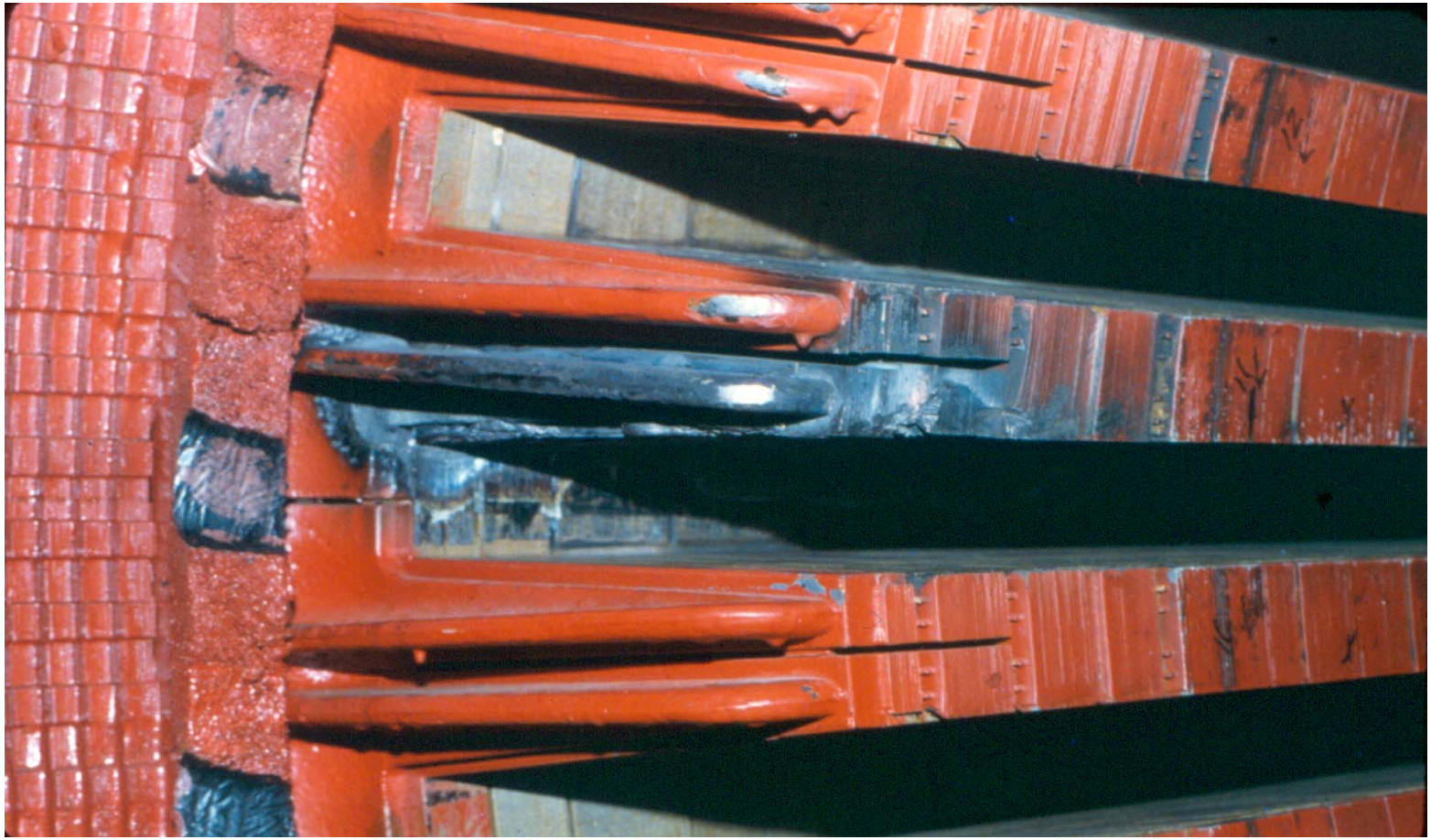

Stator Ground Fault Damage

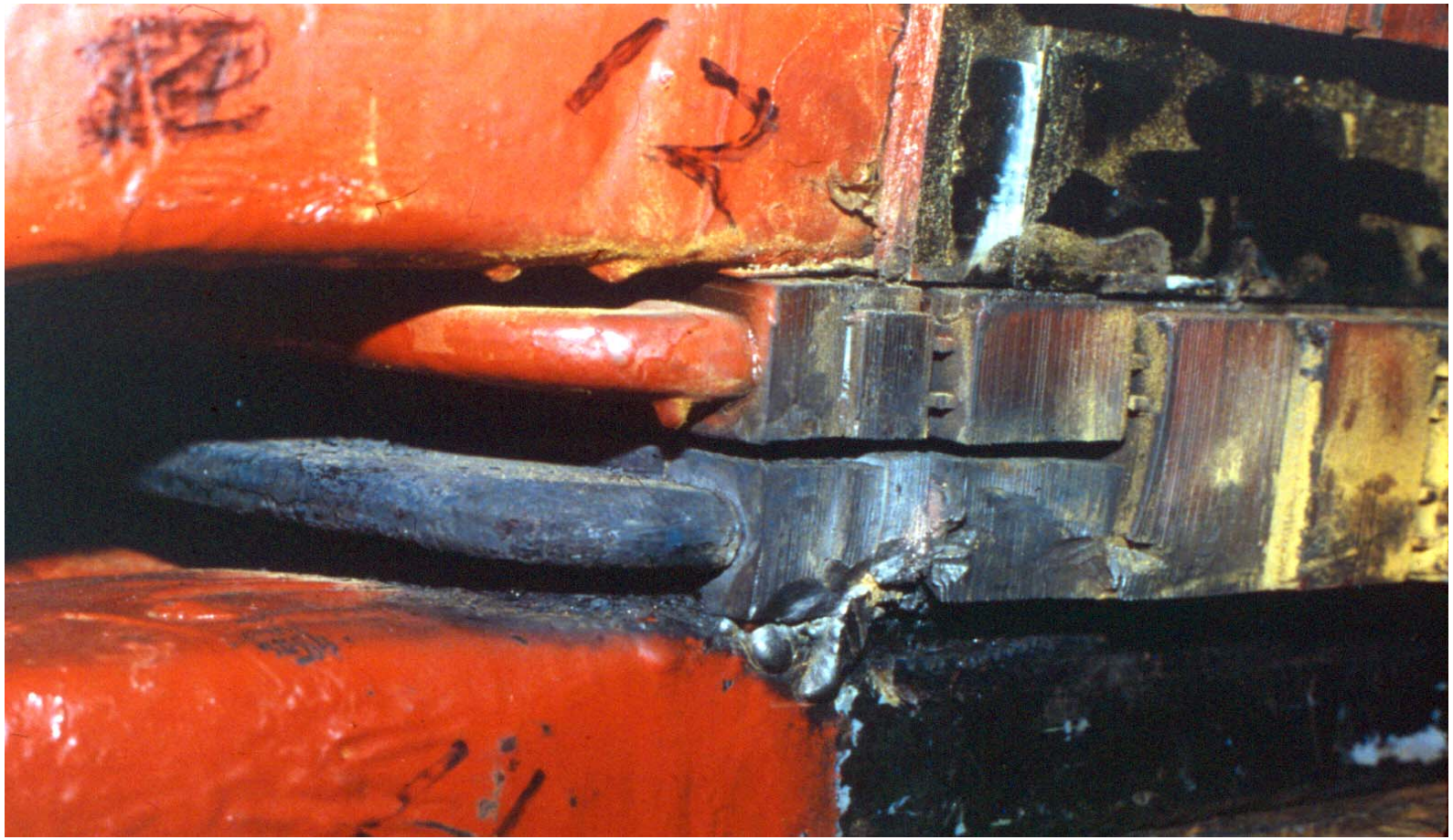

Stator Ground Fault Damage

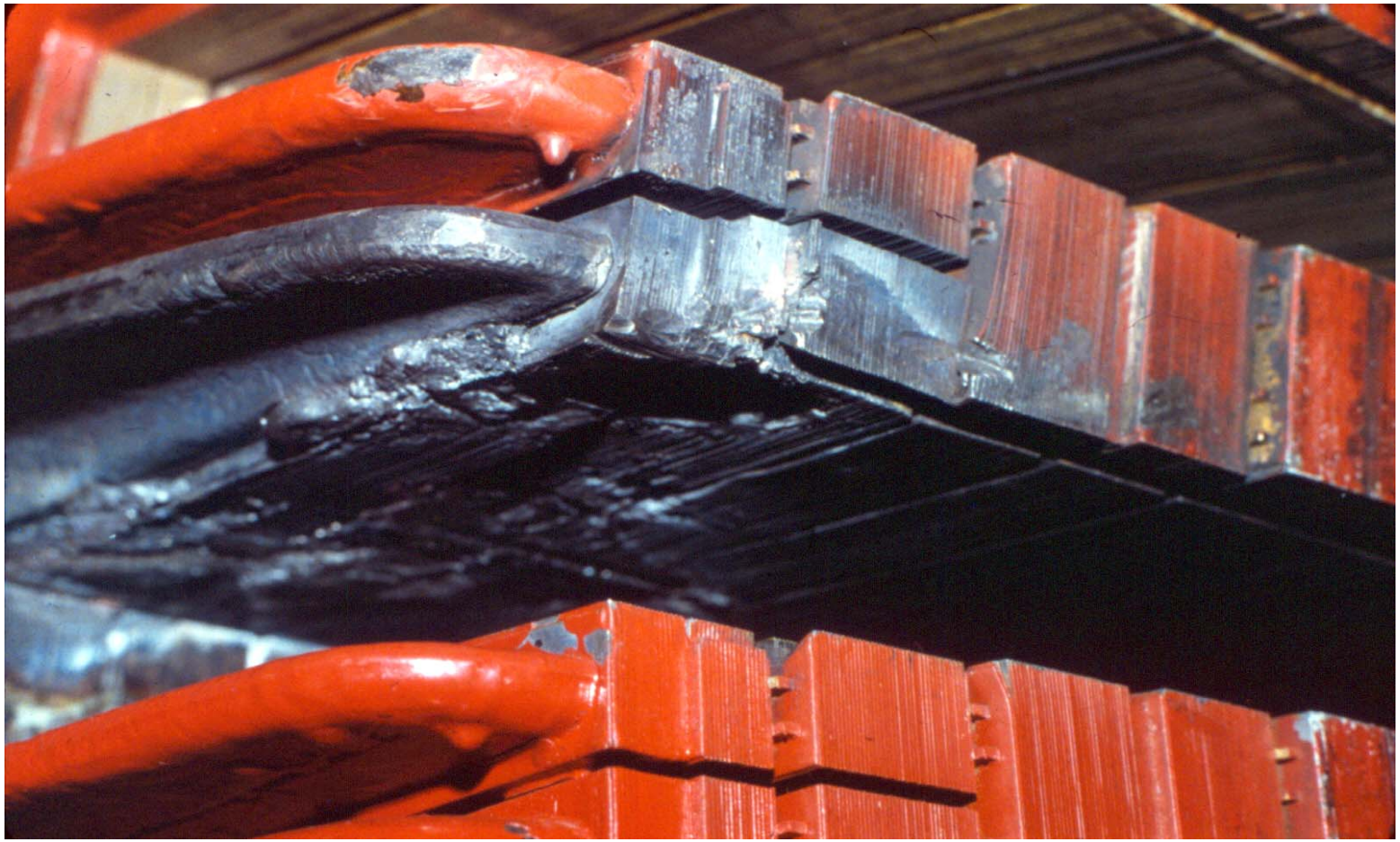

Types of Generator Connections

- **Bus or Direct Connected (typically Low Z)**
  - Directly connected to bus
  - Likely in industrial, commercial, and isolated systems
  - Simple, inexpensive

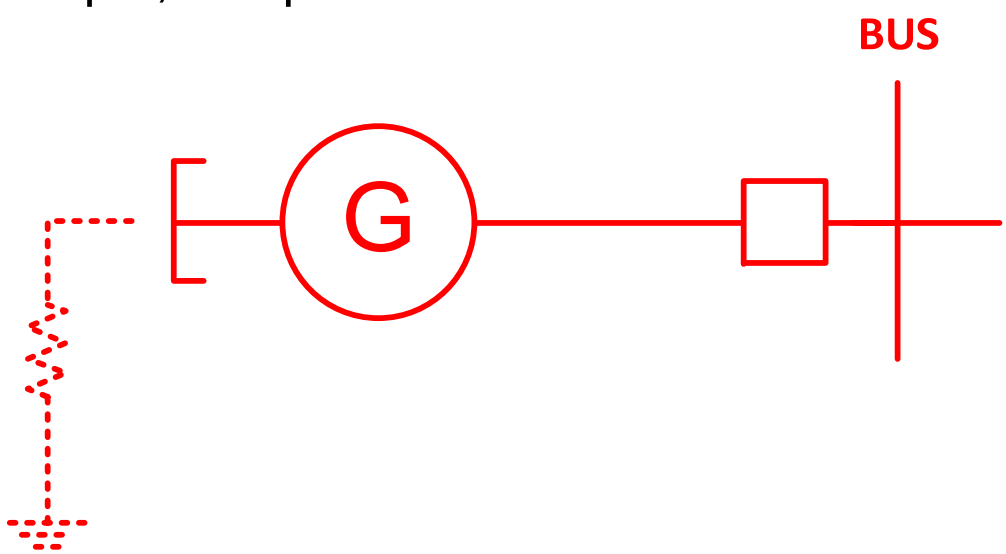

Types of Generator Connections

- **Multiple Direct or Bus Connected (No/Low Z/High Z)**
  - Directly connected to bus
  - Likely in industrial, commercial, and isolated systems
  - Simple
  - May have problems with circulating current
    - Use of single grounded machine can help
  - Adds complexity to discriminate ground fault source

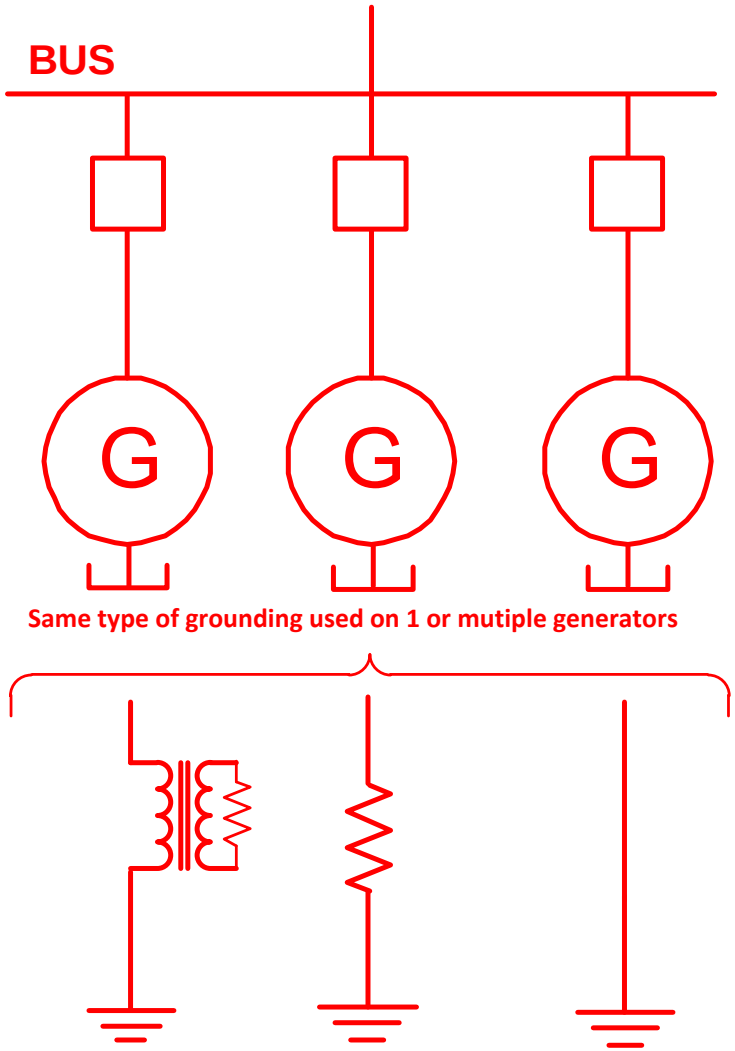

Bus (Direct) Connected

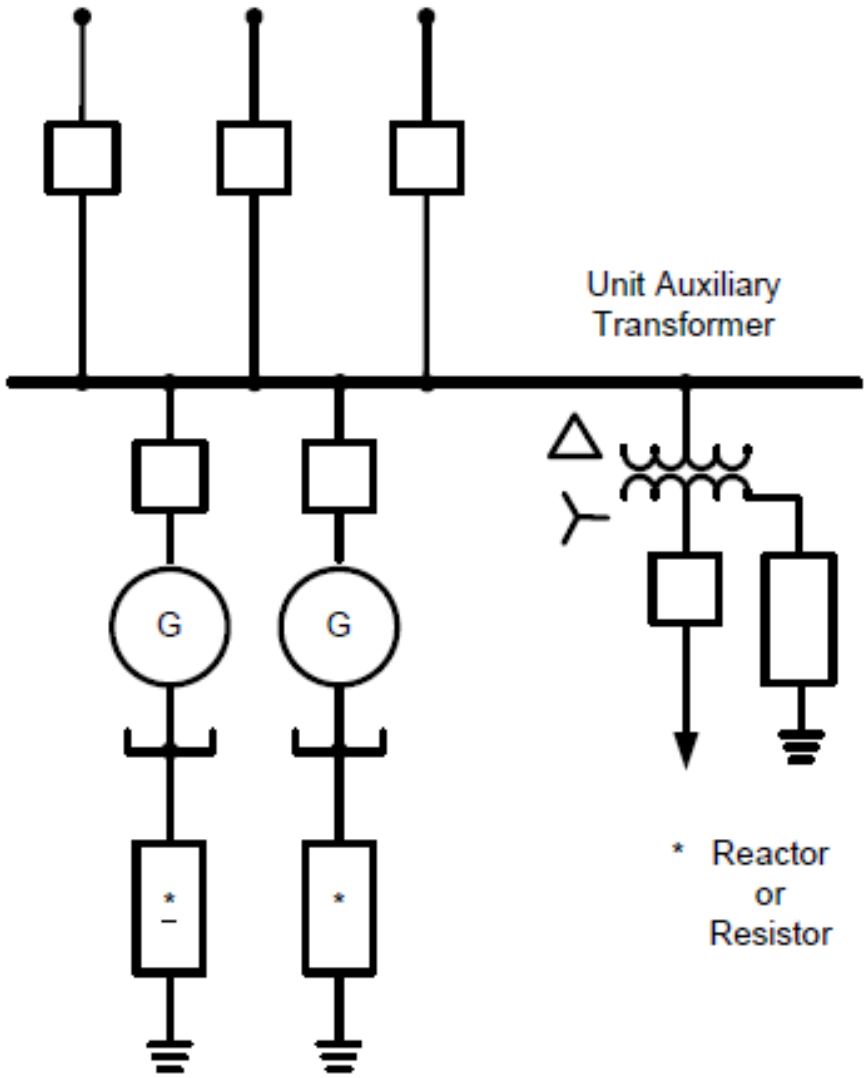

Types of Generator Connections

- **Unit Connected (High Z)**
  - Generator has dedicated unit transformer
  - Generator has dedicated ground transformer
  - Likely in large industrial and utility systems
  - 100% stator ground fault protection available

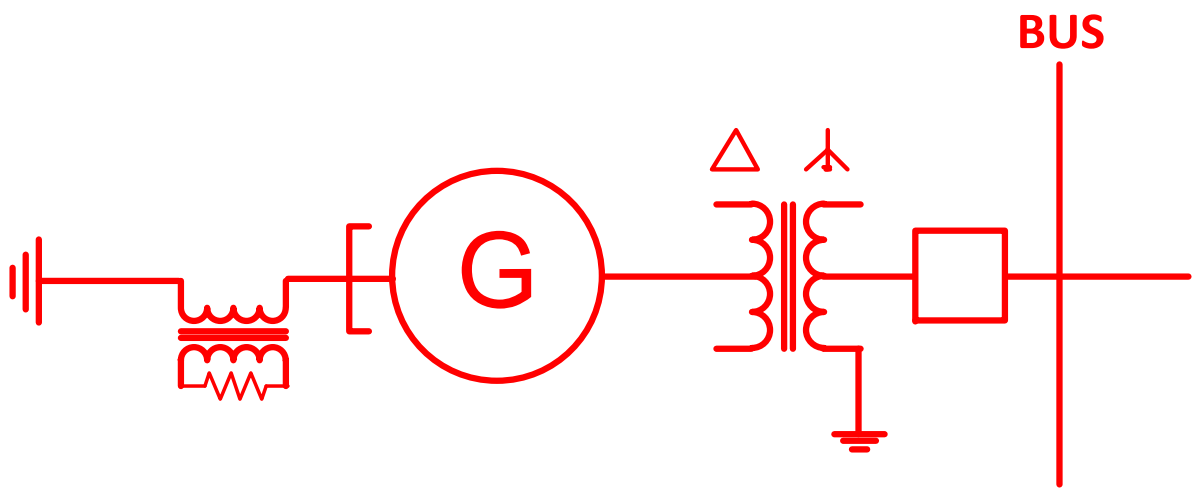

Types of Generator Connections

- **Multiple Bus (High Z), 1 or Multiple Generators**
  - Connected through one unit xfmr
  - Likely in large industrial and utility systems
  - No circulating current issue
  - Adds complexity to discriminate ground fault source
    - Special CTs needed for sensitivity, and directional ground overcurrent elements

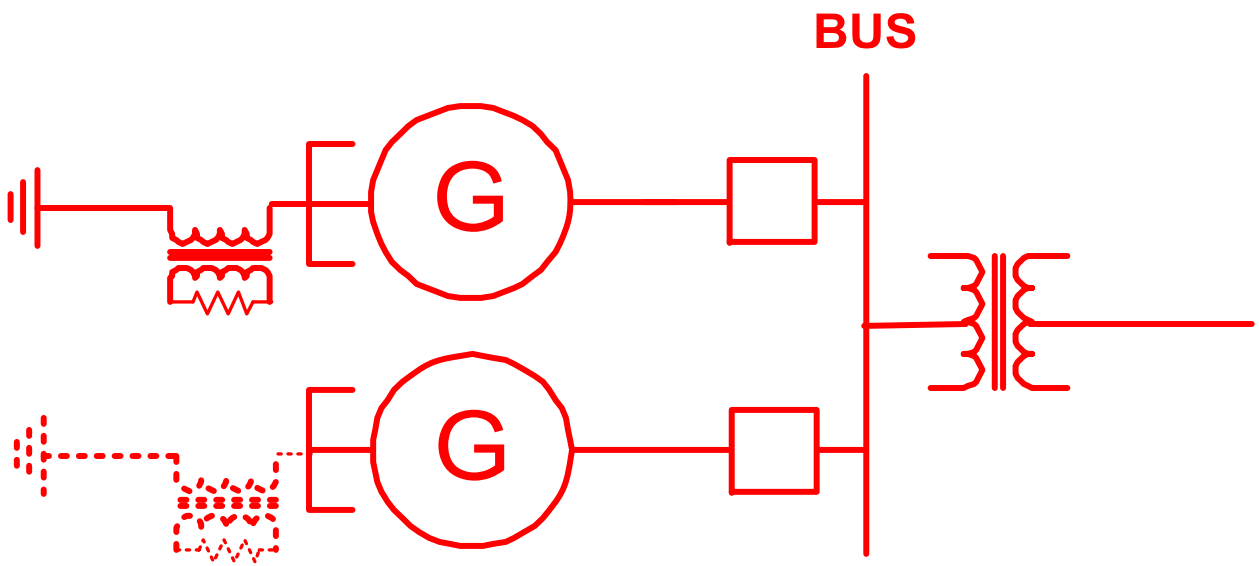

Unit Connected

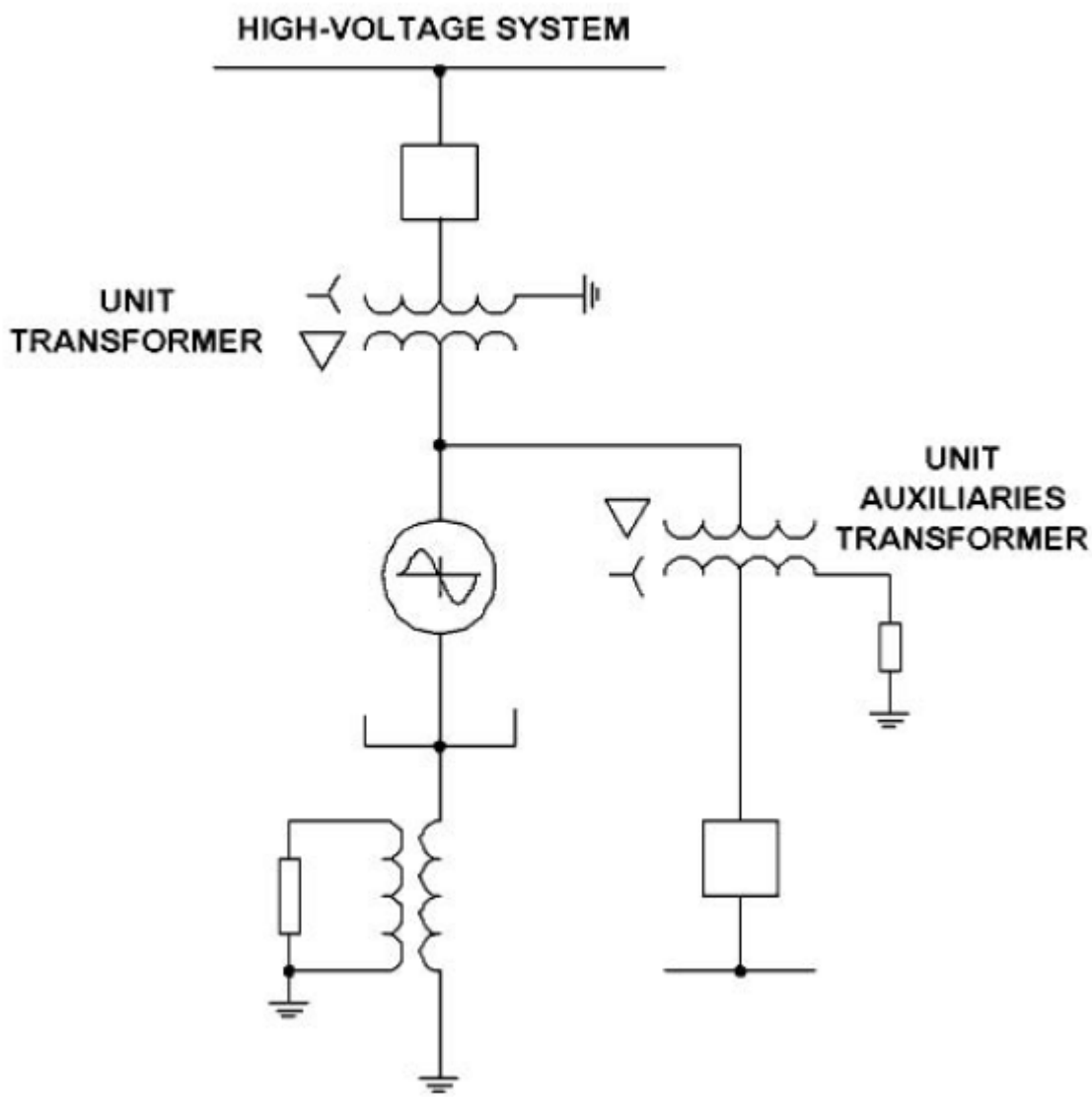

Generator Protection Overview

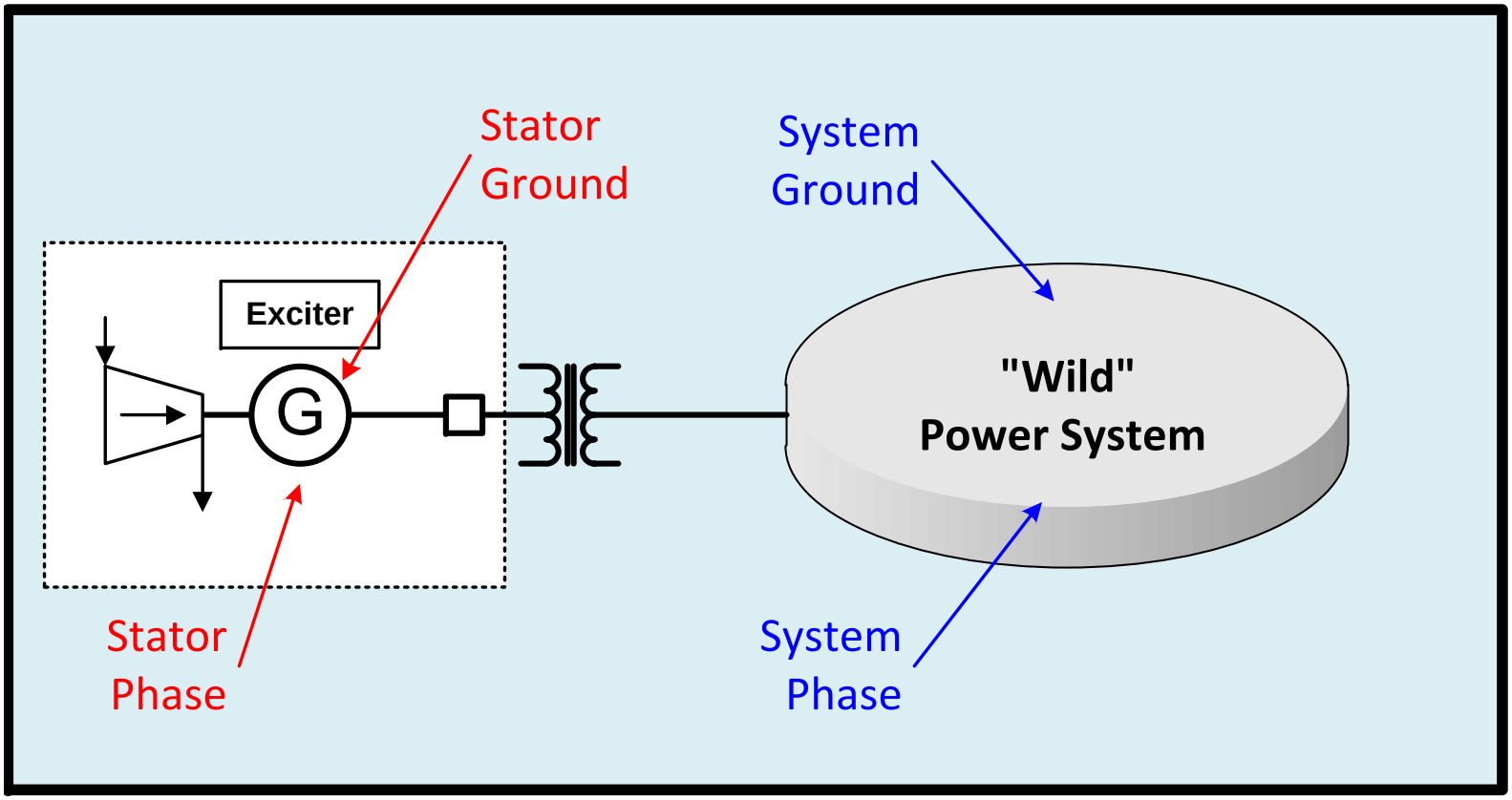

Internal and External Short Circuits

Generator Protection Overview

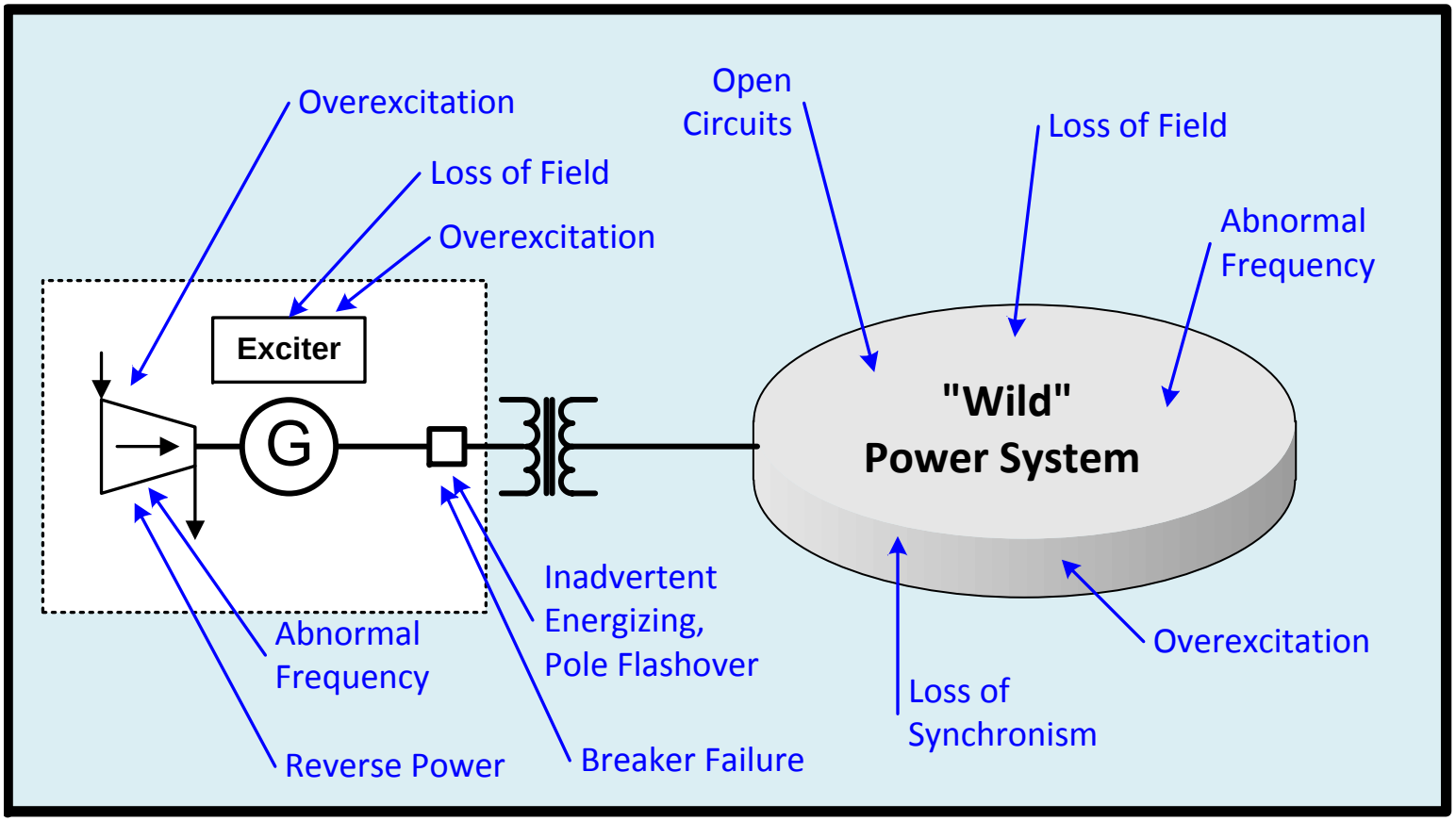

Abnormal Operating Conditions

Typical Unit Connected Generator (C37.102)

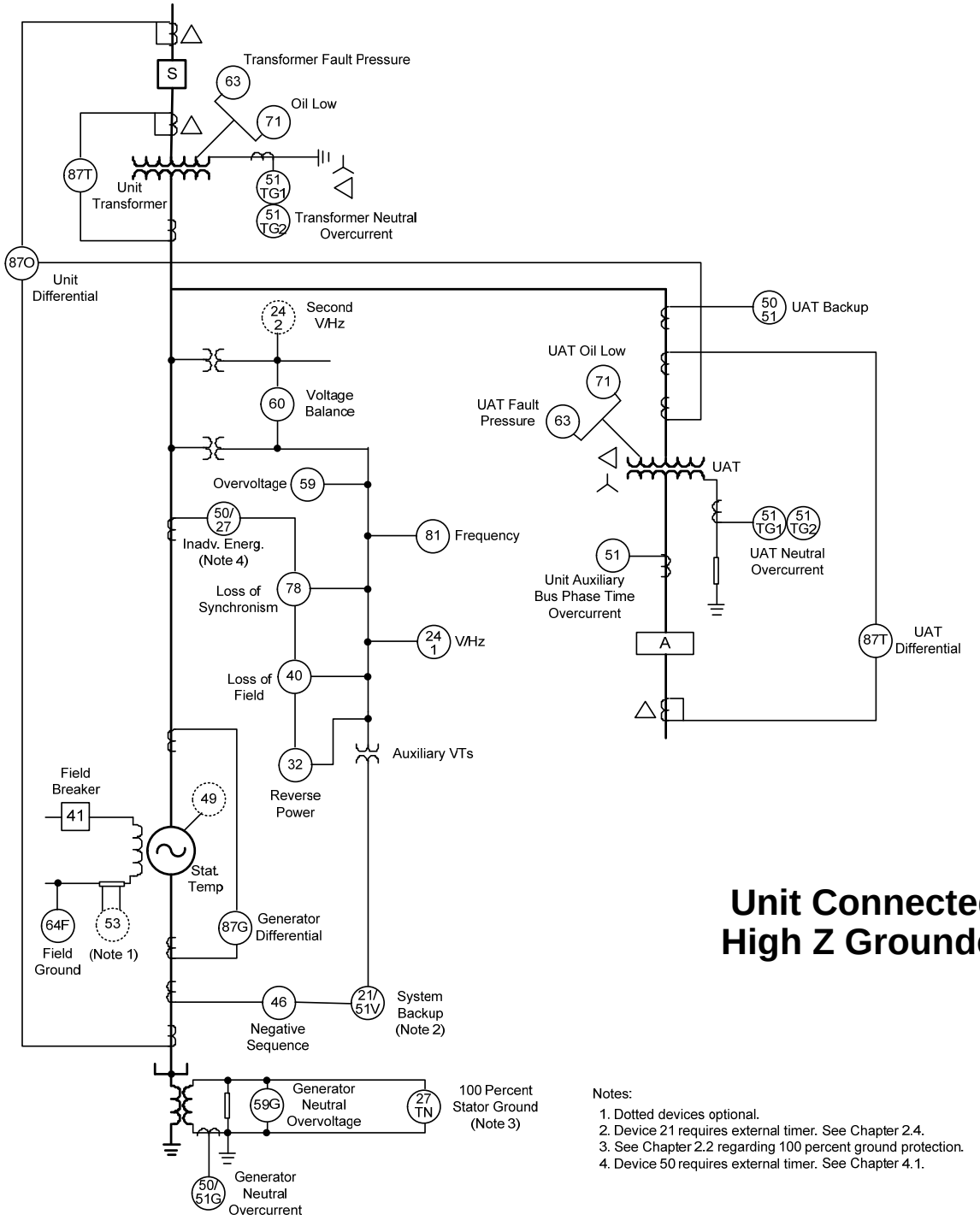

Unit Connected, High Z Grounded

Notes:

1. Dotted devices optional.
2. Device 21 requires external timer. See Chapter 2.4.
3. See Chapter 2.2 regarding 100 percent ground protection.
4. Device 50 requires external timer. See Chapter 4.1.

Stator Ground Fault-High Z Grounded Machines

- 95% stator ground fault provided by 59G Tuned to the fundamental frequency
  - Must work properly from 10 to 80 Hz to provide protection during startup
- Additional coverage near neutral (last 5%) provided by:
  - 27TN: 3rd harmonic undervoltage
  - 59D: Ratio of 3rd harmonic at terminal and neutral ends of winding
- Full 100% stator coverage by 64S
  - Use of sub-harmonic injection
  - May be used when generator is off-line
  - Immune to changes in loading (MW, MVAR)

Stator Ground Fault (59G)

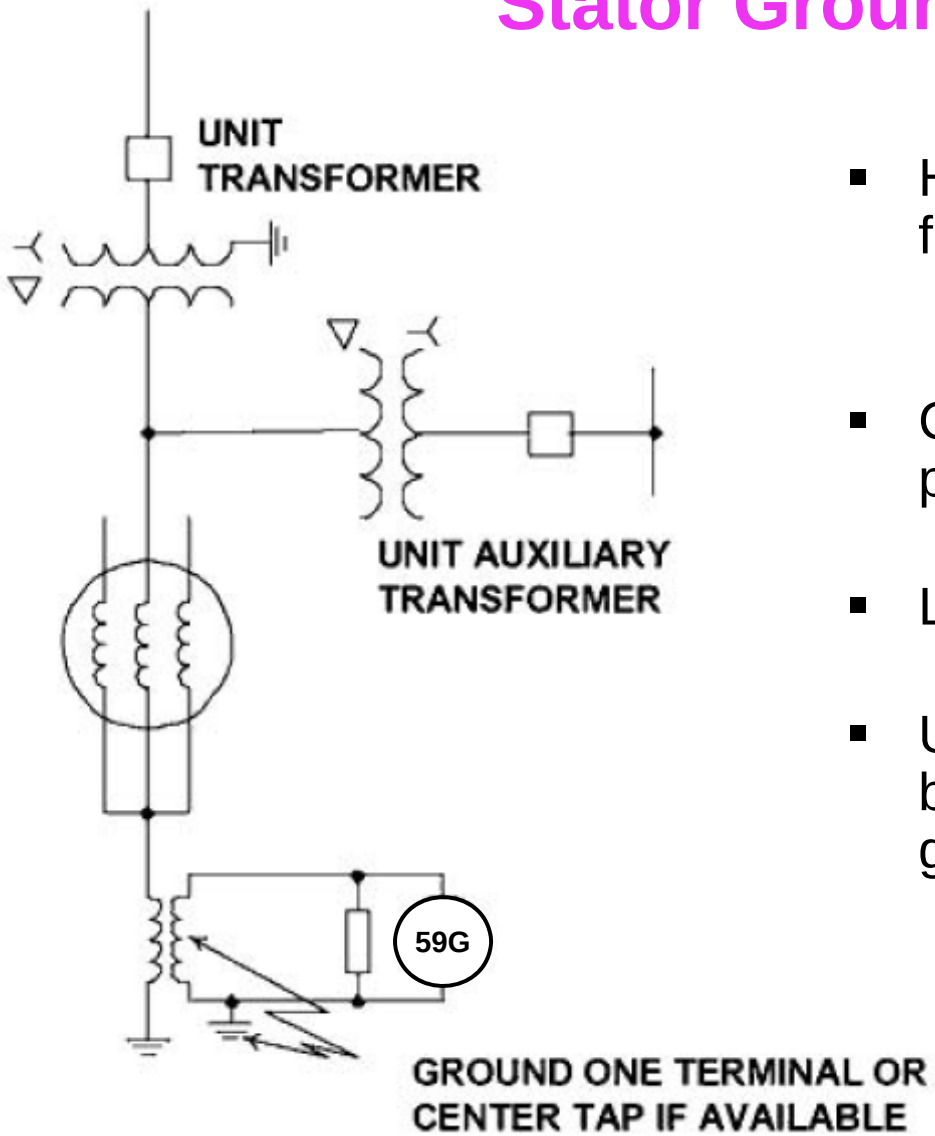

- High impedance ground limits ground fault current to about 10A
  - Limits damage on internal ground fault
- Conventional neutral overvoltage relay provides 90-95% stator coverage
- Last 5-10% near neutral not covered
- Undetected grounds in this region bypass grounding transformer, solidly grounding the machine!

Generator Protection

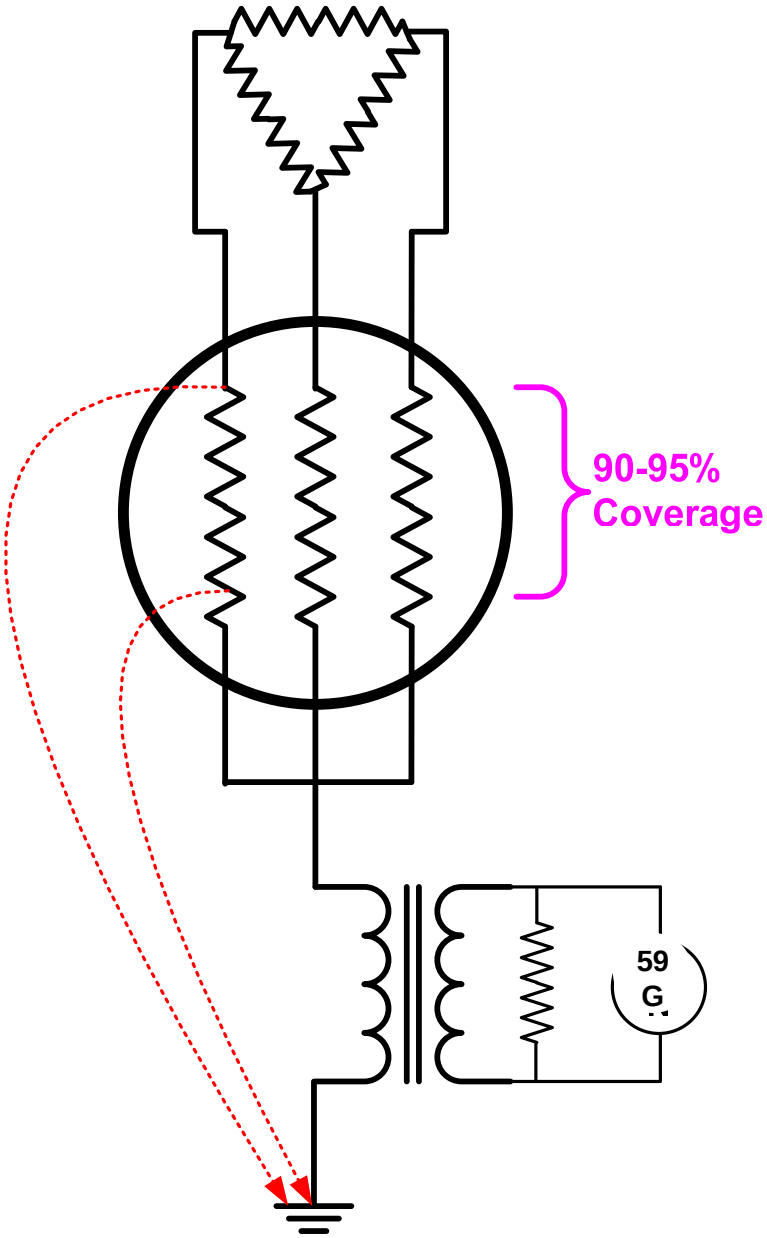

59G Element

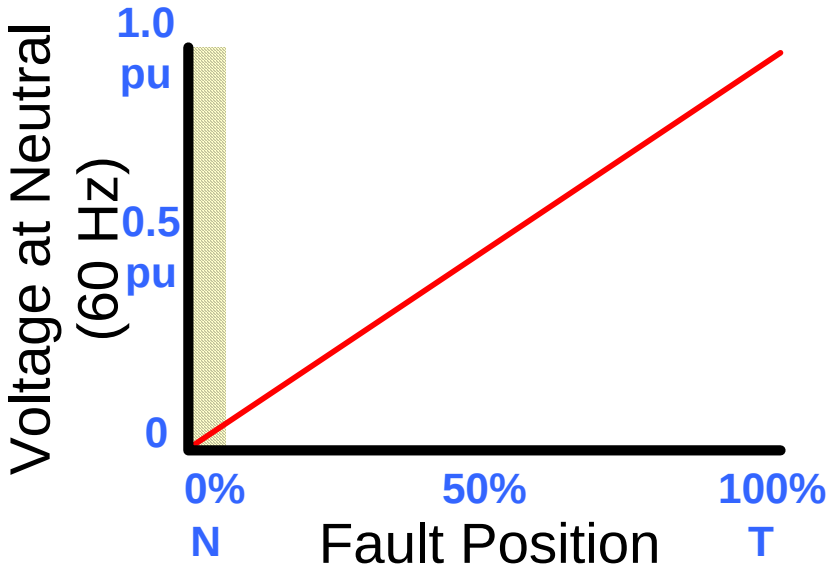

- **Neutral grounding transformer (NGT) ratio selected that provides 120 to 240V for ground fault at machine terminals**
  - **Max L-G volts =13.8kV / 1.73 = 7995V**
  - **Max NGT volts sec. = 7995V / 120V = 66.39 VTR**

59G System Ground Fault Issue

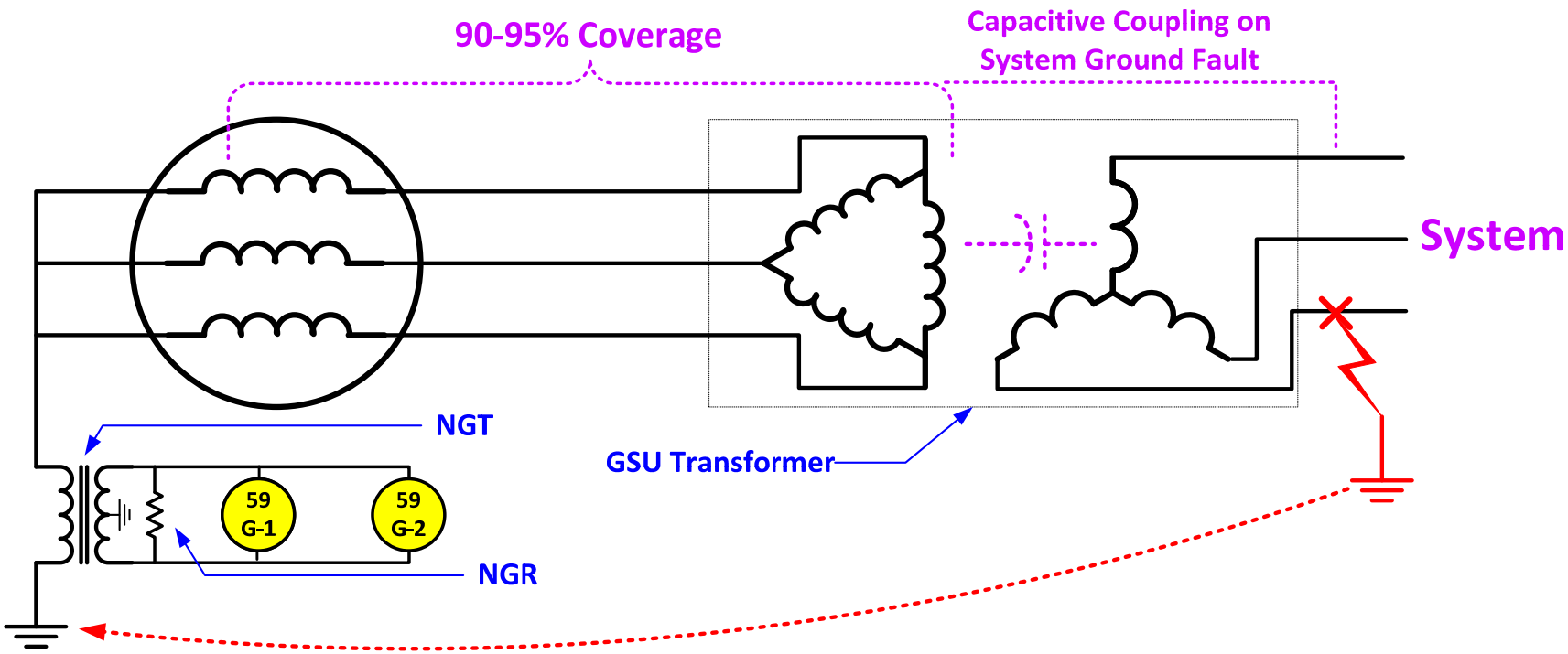

- GSU provides capacitive coupling for system ground faults into generator zone
- Use two levels of 59G with short and long time delays for selectivity
- <u>Cannot</u> detect ground faults at/near the neutral (very important)

Multiple 59G Element Application

- **59G-1,** set in this example to 5%, may sense capacitance coupled out-of-zone ground fault
  - **Long** time delay

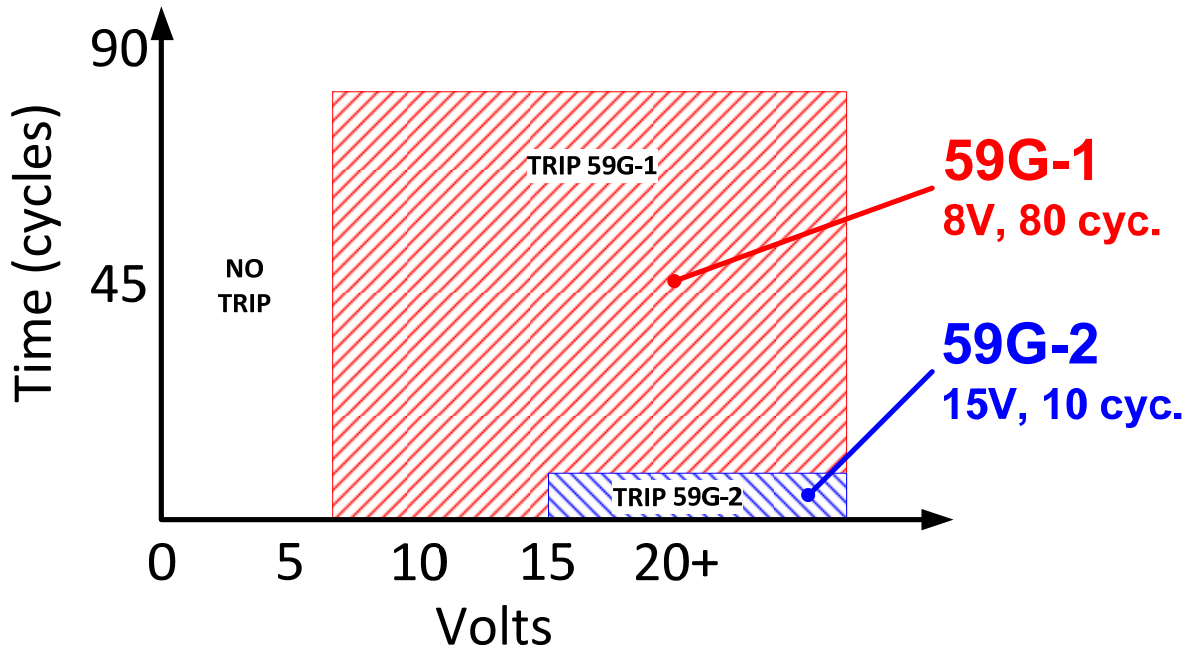

- **59G-2,** set in this example to 15%, is set above capacitance coupled out-of-zone ground fault
  - **Short** time delay

Use of Symmetrical Component Quantities to Supervise 59G Tripping Speed

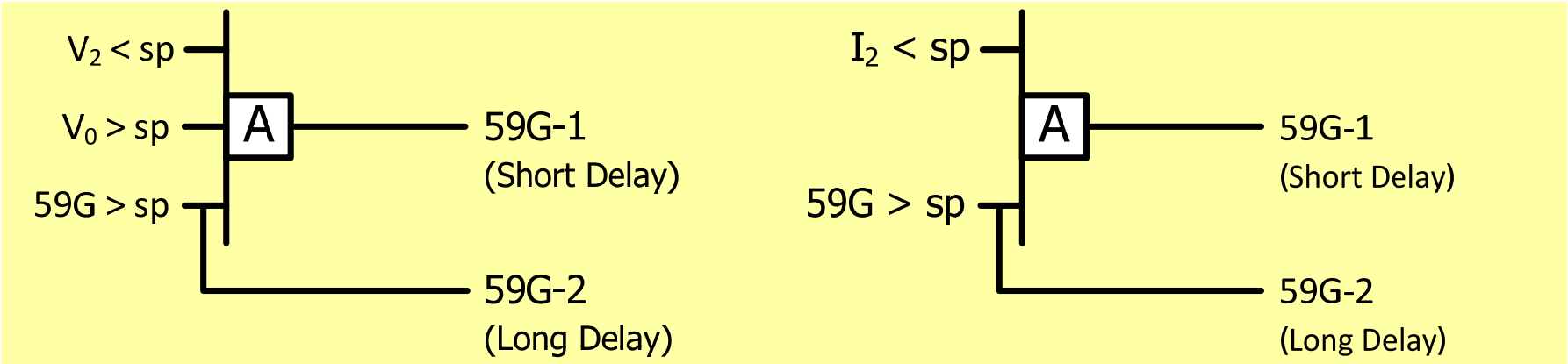

- Both V_2 and I_2 implementation have been applied
  - A ground fault in the generator zone produces primarily <u>zero</u> sequence voltage
  - A fault in the VT secondary or system (GSU coupled) generates <u>negative</u> sequence quantities in addition to zero sequence voltage

59G Element

59G – Generator Neutral Overvoltage: Three setpoints

- 1st level set sensitive to cover down to 5% of stator
  - Long delay to coordinate with close-in system ground faults capacitively coupled across GSU
- 2nd level set higher than the capacitively coupled voltage so coordination from system ground faults is not necessary
  - Allows higher speed tripping
  - Only need to coordinate with PT fuses
- 3rd level may be set to initiate waveform capture and not trip, set as intermittent arcing fault protection

59G/27TN Timing Logic

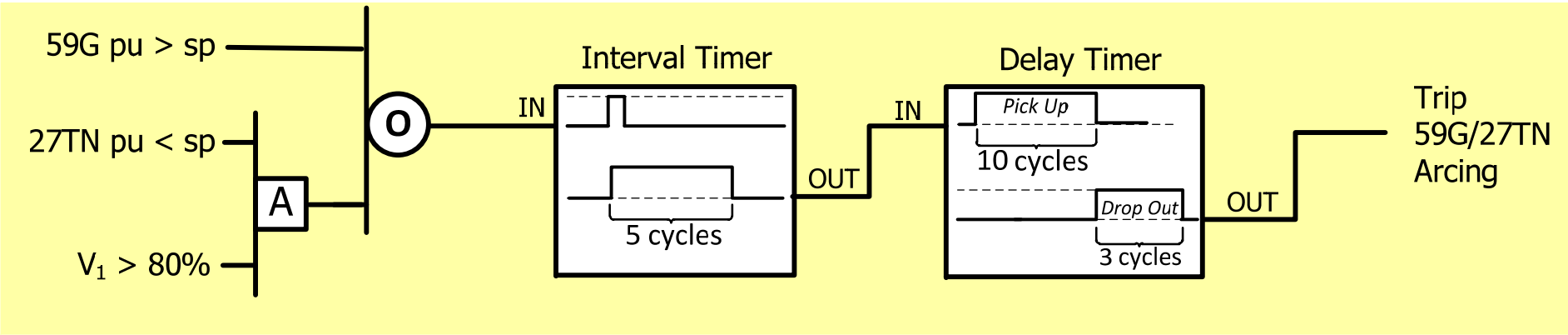

Interval and Delay Timers used together to detect intermittent pickups of arcing ground fault

Intermittent Arcing Ground Fault Turned Multiphase

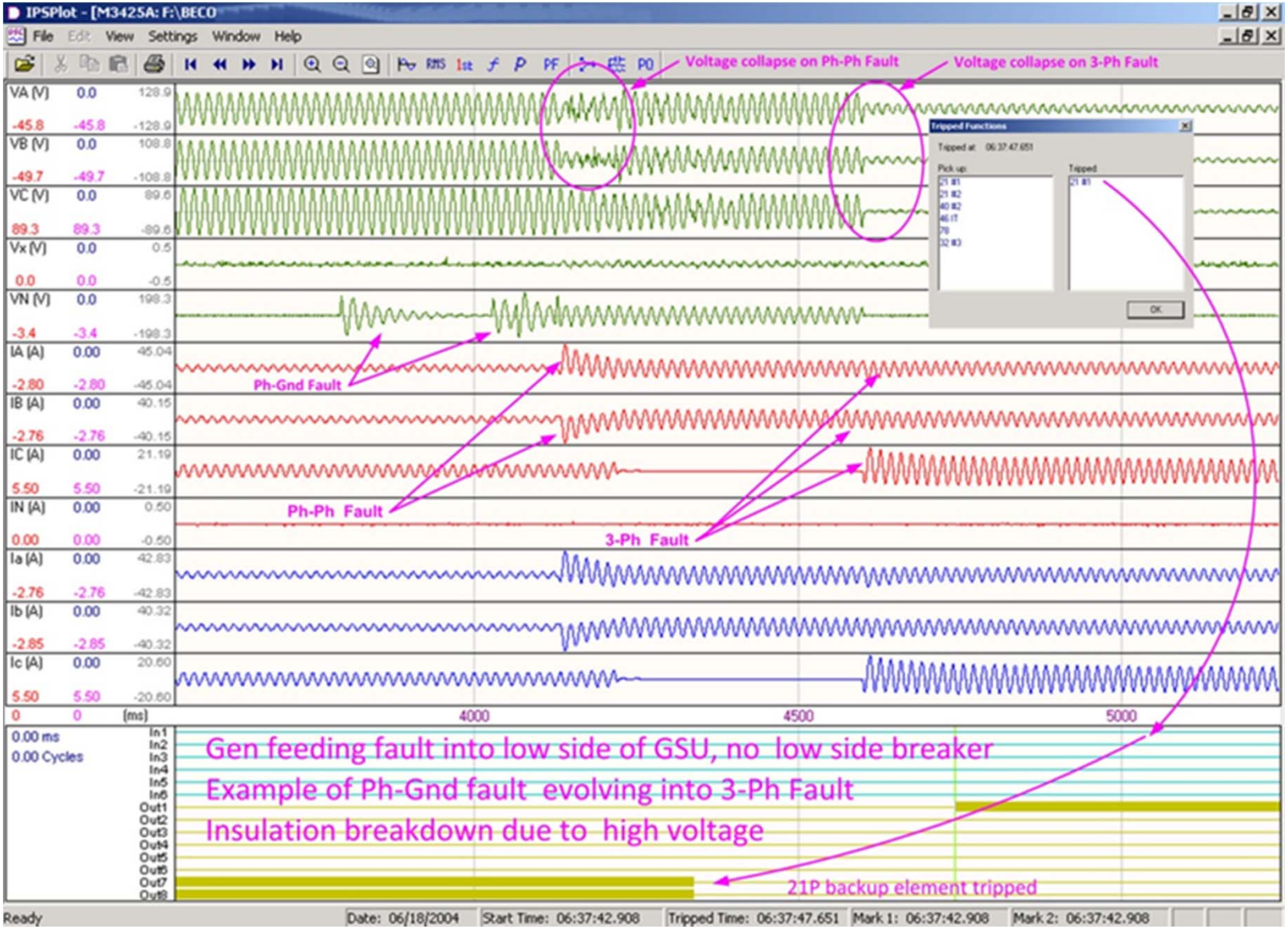

Why Do We Care About Faults Near Neutral?

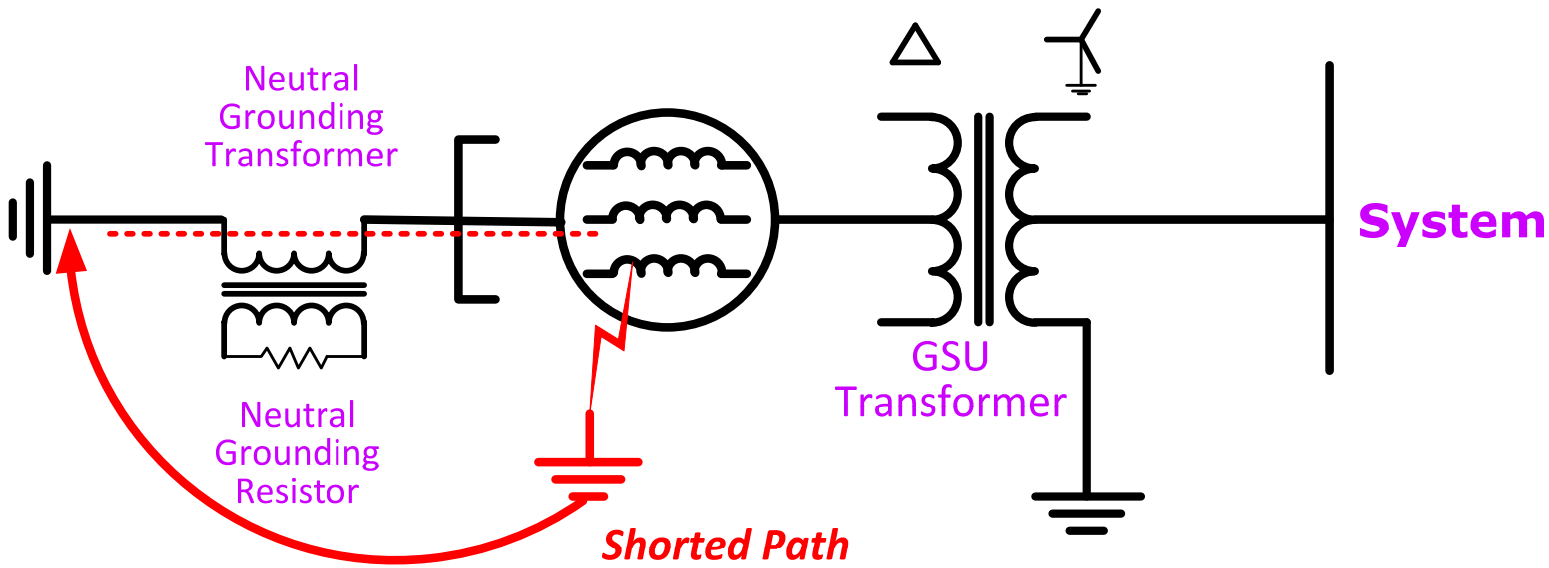

- A fault at or near the neutral shunts the high resistance that saves the stator from large currents with an internal ground fault
- A generator operating with an undetected ground fault near the neutral is a accident waiting to happen

- We can use 3rd Harmonic or Injection Techniques for complete (100%) coverage

Third-Harmonic Rotor Flux

- **Develops in stator due to imperfections in winding and system connections**
- **Unpredictable amount requiring field observation at various operating conditions**
- **Also dependent on pitch of the windings, which a method to define the way stator windings placed in the stator slots**

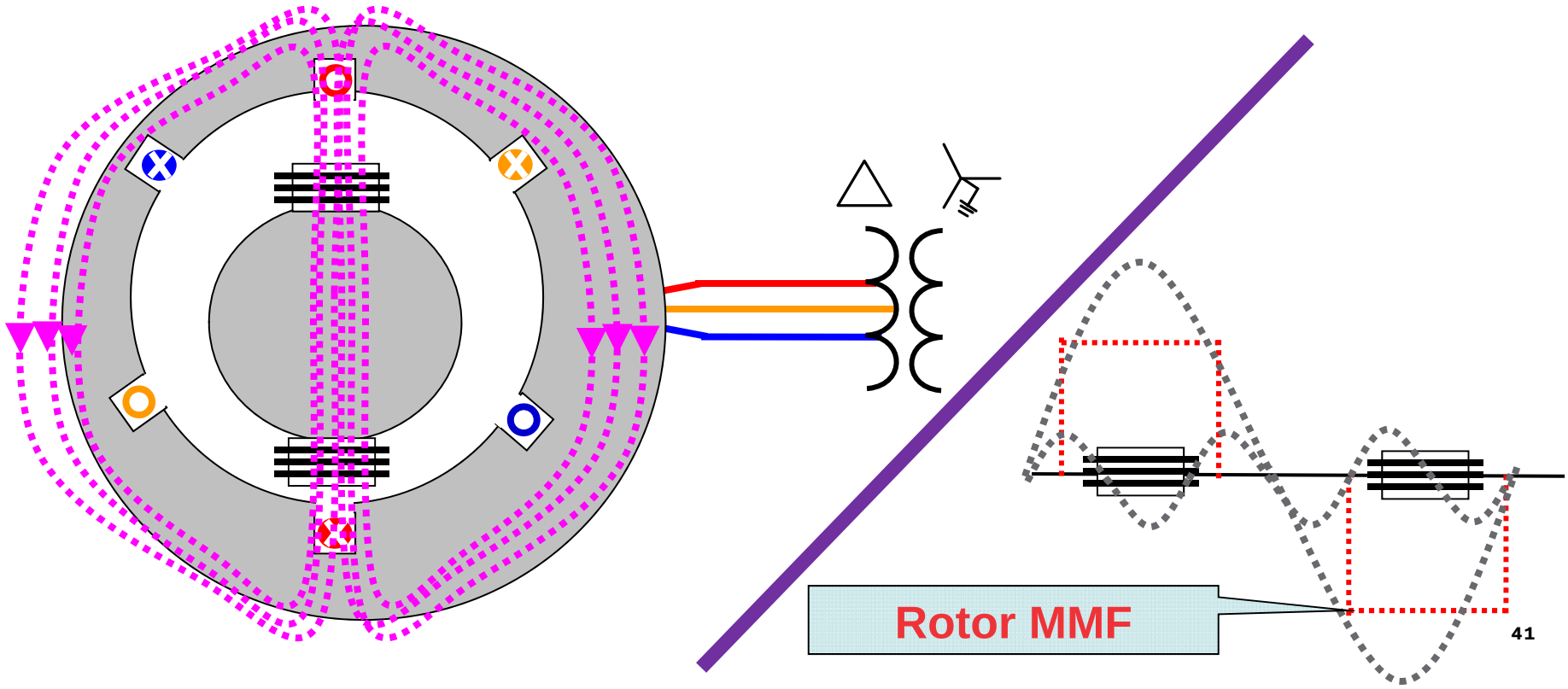

Using Third Harmonic in Generators

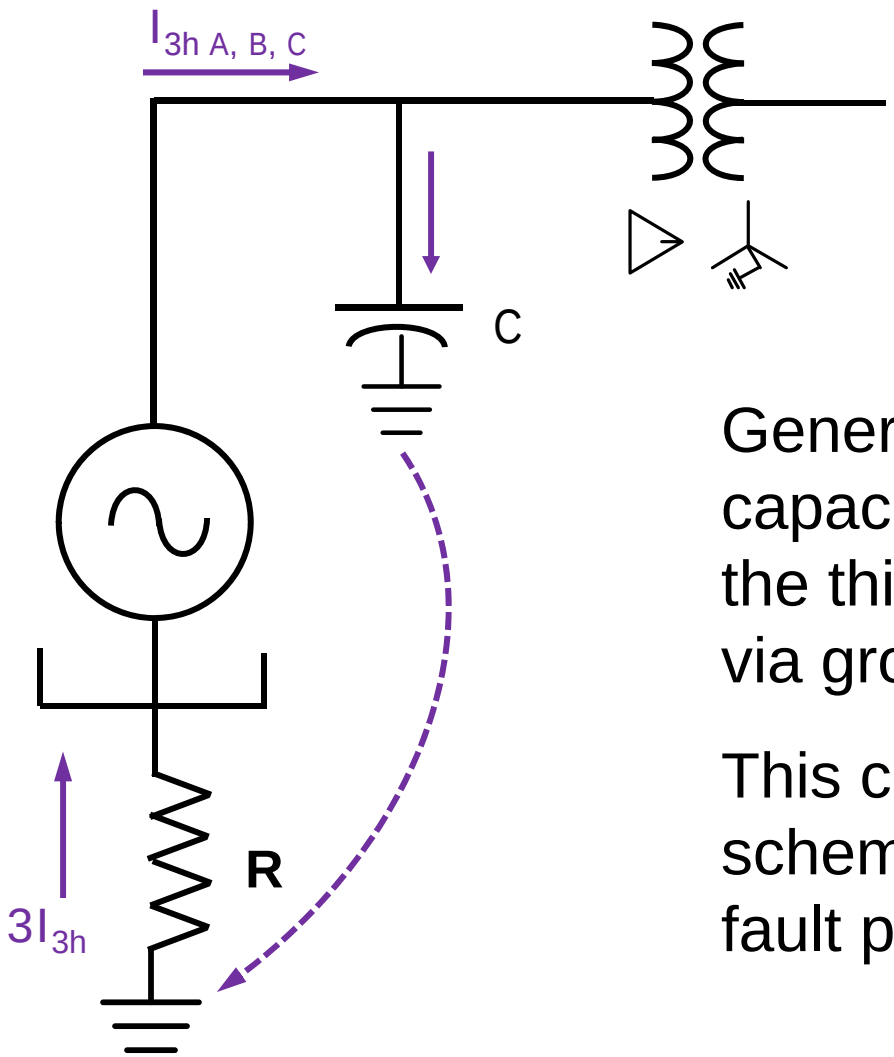

Generator winding and terminal capacitances (C) provide path for the third-harmonic stator current via grounding resistor

This can be applied in protection schemes for enhanced ground fault protection coverage

Generator Capacitance and 3rd Harmonics

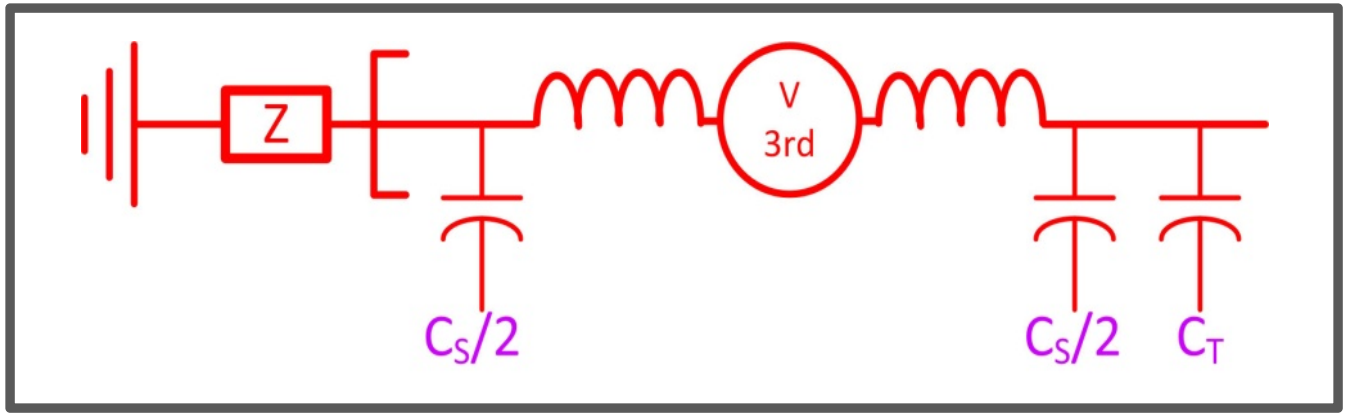

- 3rd harmonics are produced by some generators
  - Amount typically small
    - Lumped capacitance on each stator end is $C_S/2$.
  - C_T is added at terminal end due to surge caps and isophase bus
  - Effect is 3rd harmonic null point is shifted toward terminal end and not balanced

3rd Harmonic in Generators

- 3rd harmonic may be present in terminal and neutral ends
- Useful for ground fault detection near neutral
  - If 3rd harmonic goes away, conclude a ground fault near neutral
- 3rd harmonic varies with loading

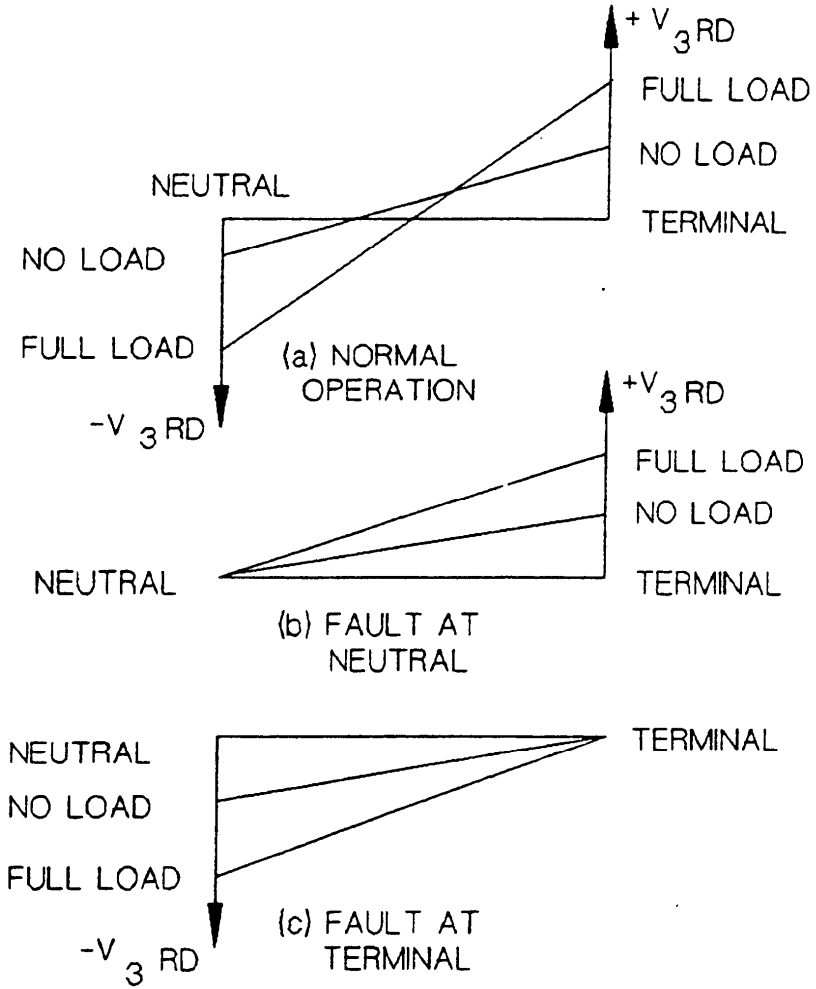

27TN – 3rd Harmonic Neutral Undervoltage

- Provides 0-15% stator winding coverage (typ.)
- Tuned to 3rd harmonic frequency
- Provides two levels of setpoints
- Supervisions for increased security under various loading conditions: Any or All May be Applied Simultaneously

  - Phase Overvoltage Supervision
  - Underpower Block
  - Forward & Reverse
  - Under VAr Block; Lead & Lag
  - Power Factor Block; Lead & Lag
  - Definable Power Band Block

  - Undervoltage/No Voltage Block
  - Varies with load
  - May vary with power flow direction
  - May vary with level
  - May vary with lead and lag
  - May be gaps in output

Loading/operating variables may be Sync Condenser, VAr Sink, Pumped Storage, CT Starting, Power Output Reduction

3rd Harmonic in Generators: Typical 3rd Harmonic Values

UNIT LOAD		180 HZ RMS VOLTAGE		VOLTAGE RATIO
MW	MVAR	NEUTRAL	TERMINAL	TERMINAL/NEUTRAL
0	0	2.8	2.7	1.08
7	0	2.5	3.7	1.48
35	5	2.7	3.8	1.41
105	5	4.2	5.0	1.19
175	25	5.5	6.2	1.13
340	25	8.0	8.0	1.00

Magnitudes of Third Harmonic Voltages for a Typical Generator

- **3rd harmonic values tend to increase with power and VAr loading**
- **Fault near neutral causes 3rd harmonic voltage at neutral to go to zero volts**

Example 3rd Harmonic Plot: Effects of MW and MVAR Loading

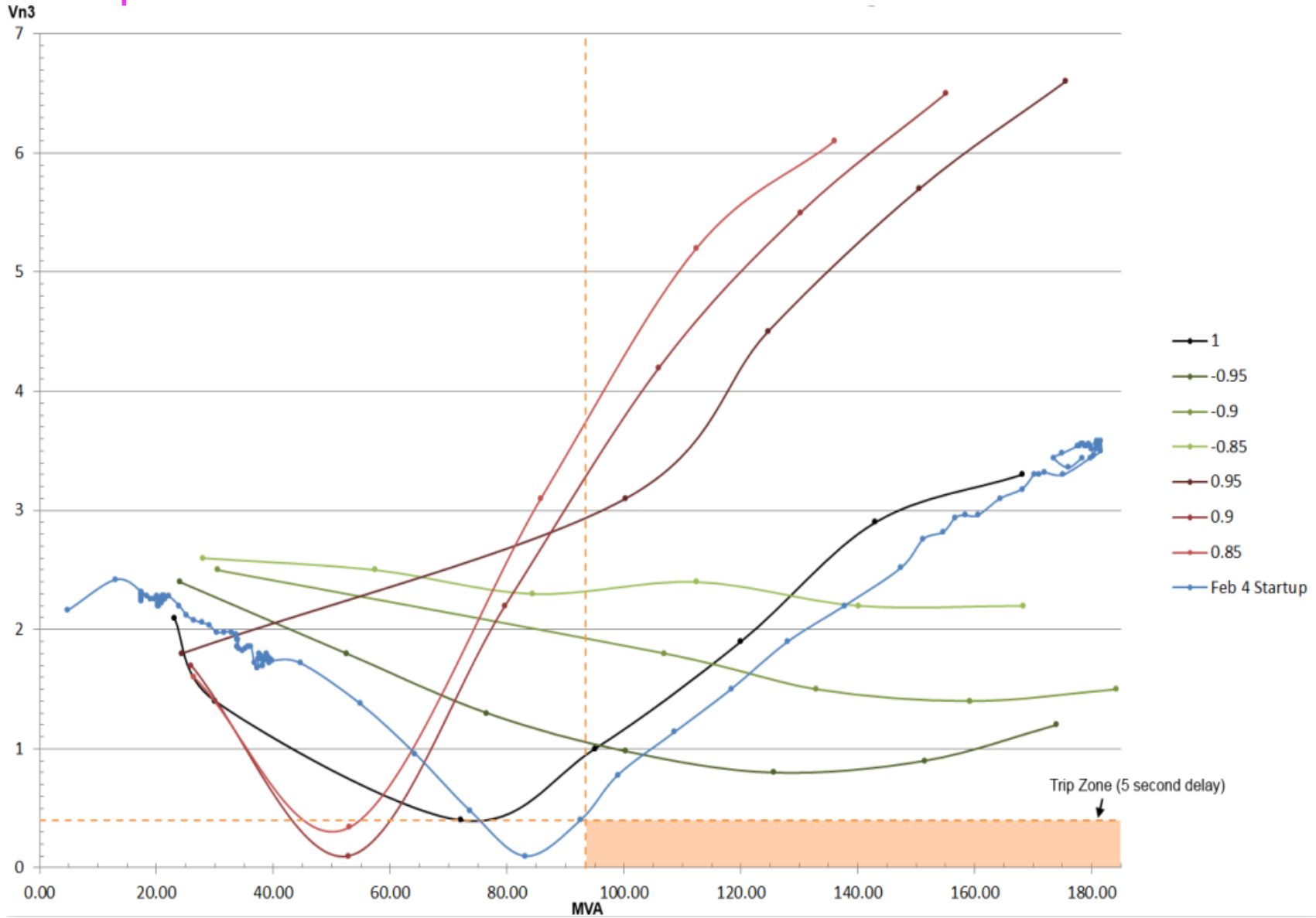

100% Stator Ground Fault (59G/27TN)

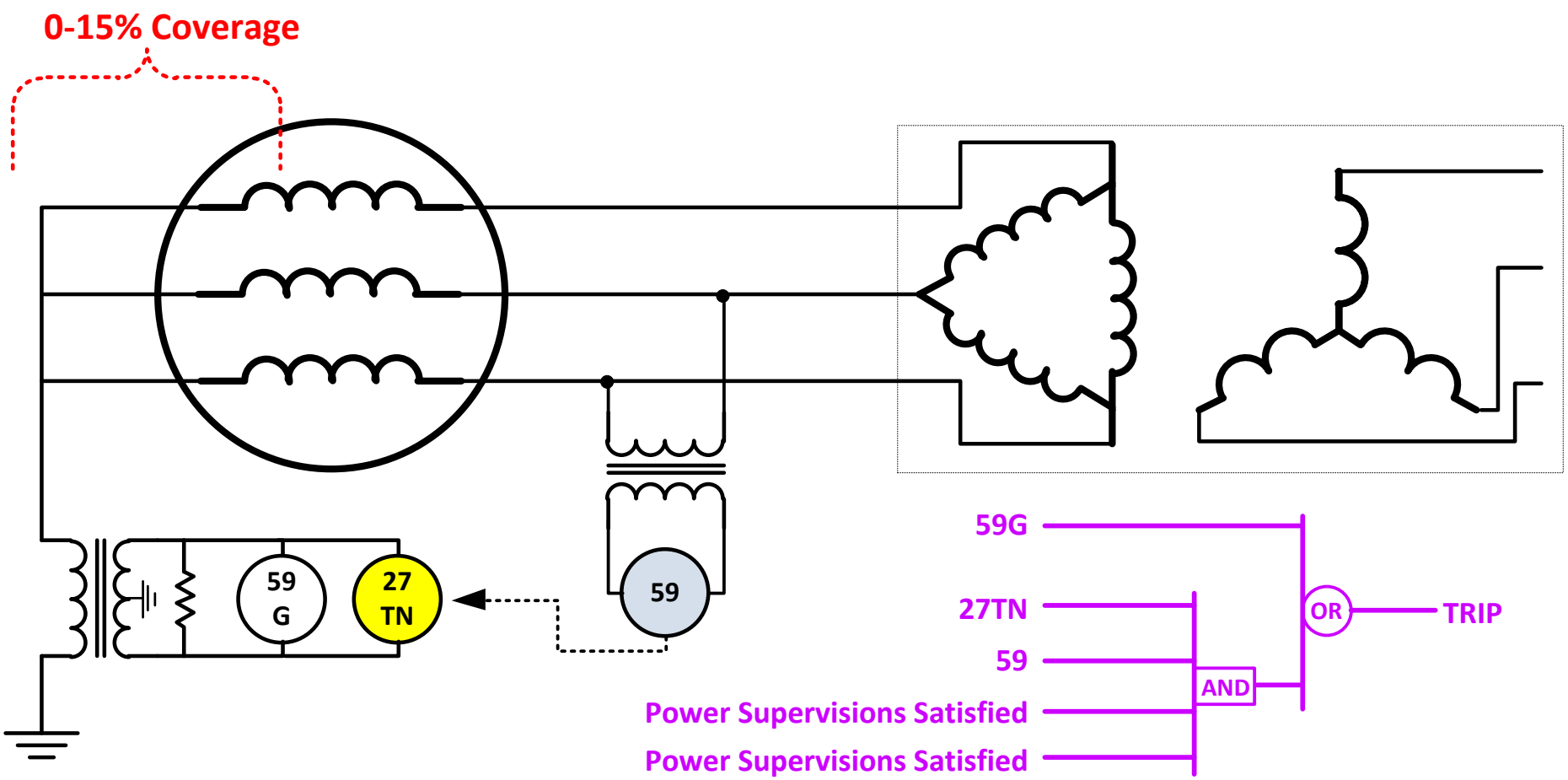

Third-Harmonic Undervoltage Ground-Fault Protection Scheme

100% Stator Ground Fault (59G/27TN)

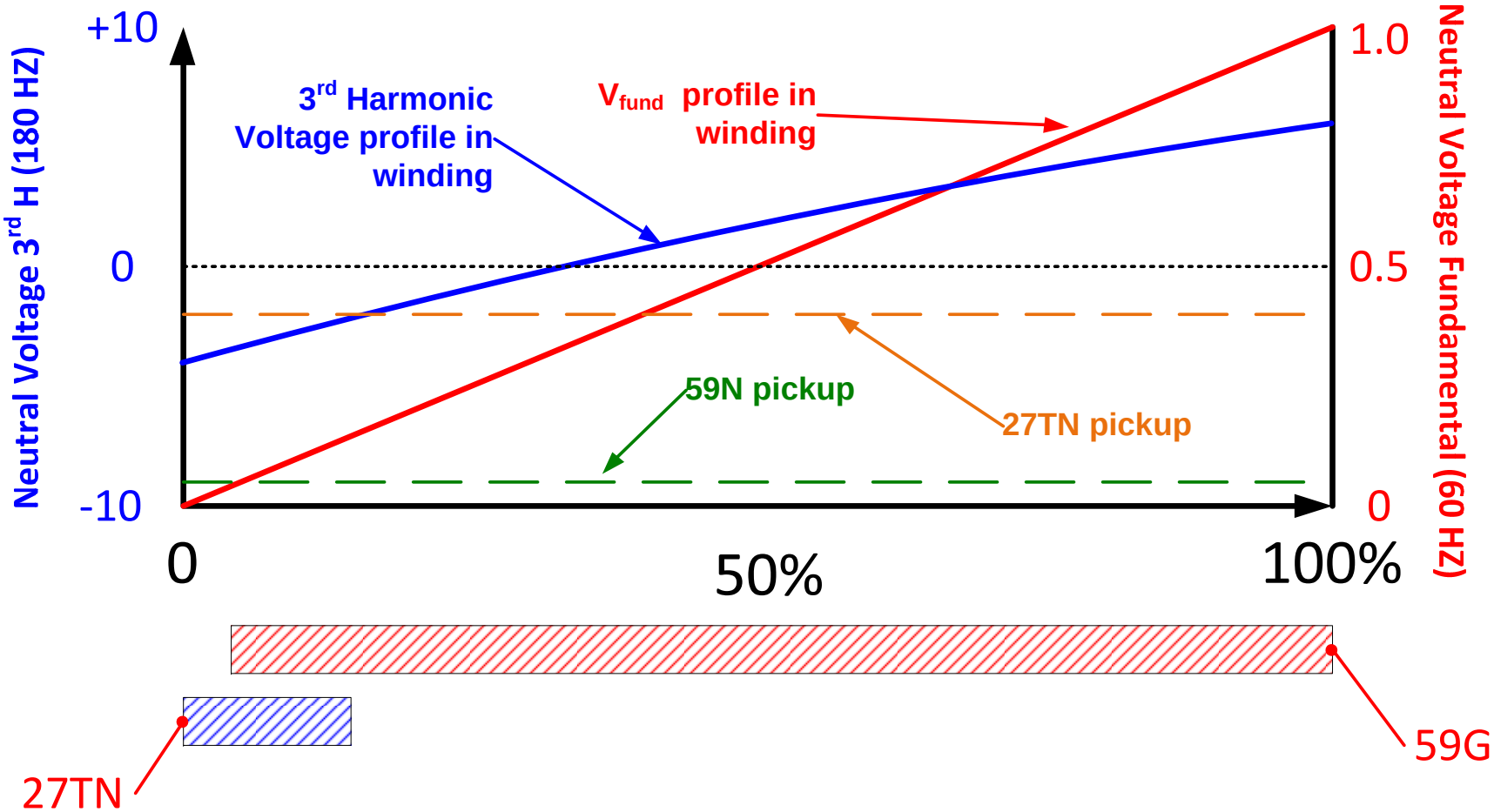

Overlap of Third Harmonic (27TN) with 59G Relay

59D – 3rd Harmonic Ratio Voltage

- **Examines 3rd harmonic at line and neutral ends of generator**
- **Provides 0-15% and 85-100% stator winding coverage (typ.)**
- **Does not have a security issue with loading, as can a 27TN**
  - May be less reliable than 27TN (not enough difference to trip)
- **"Blind spot" at mid-winding protected by 59G**
- **Needs wye PTs; cannot use delta PTs**

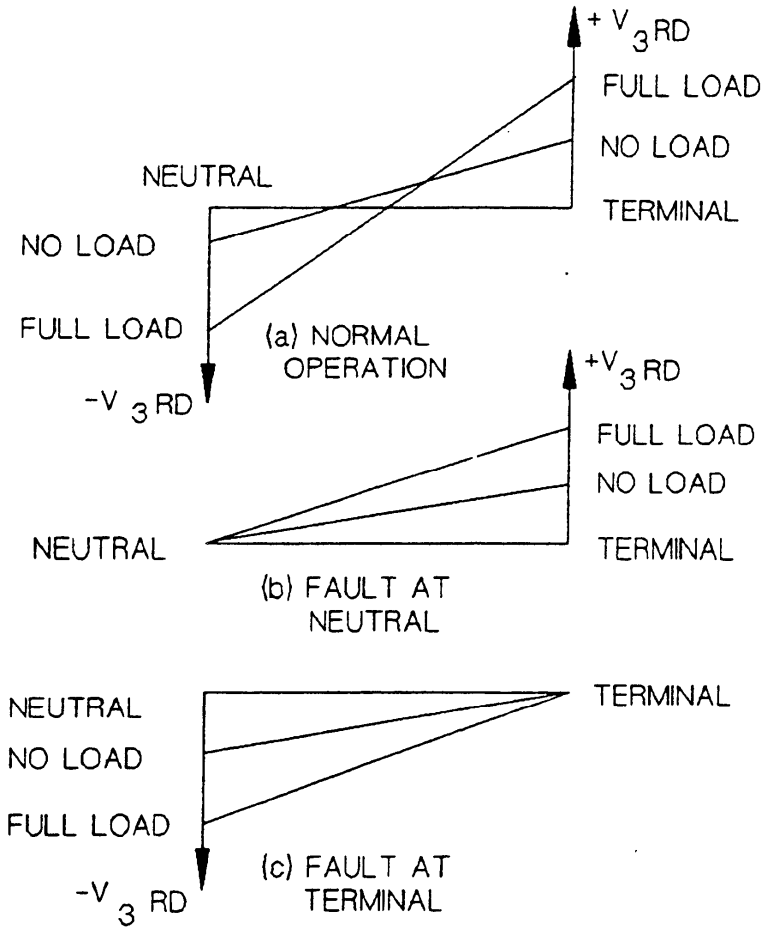

59D – 3rd Harmonic Ratio Voltage

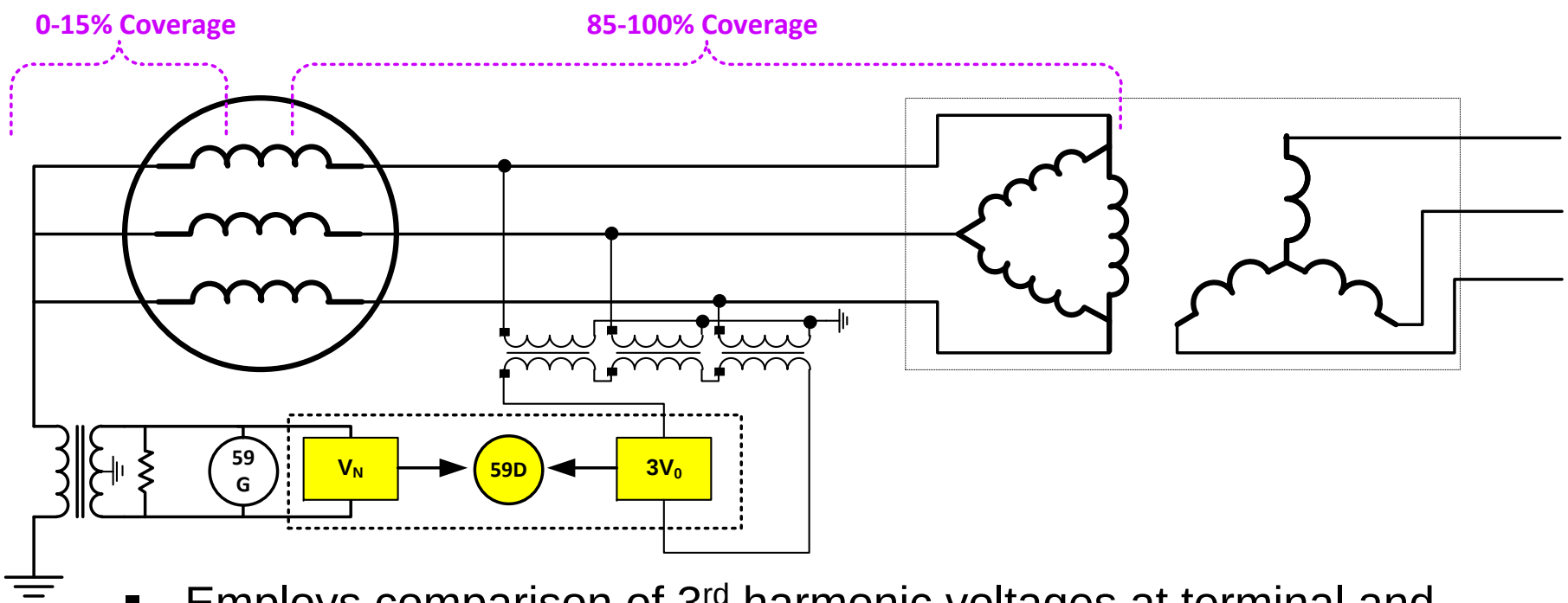

- Employs comparison of 3rd harmonic voltages at terminal and neutral ends
- These voltages are fairly close to each other
- One goes very low if a ground fault occurs at either end of the winding

Stator Ground Faults: 59N, 27TN, 59D

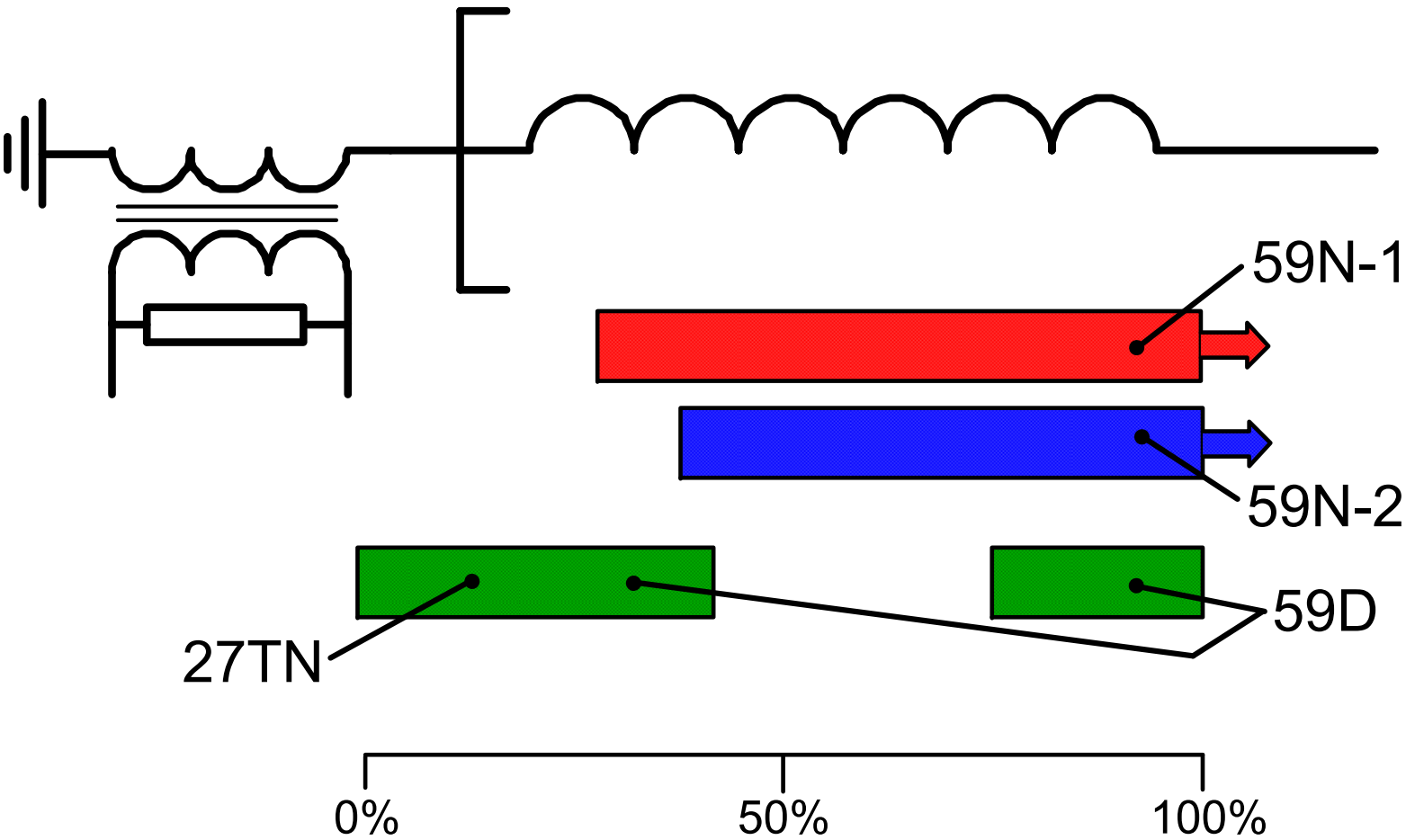

Subharmonic Injection: 64S

- 20Hz injected into grounding transformer secondary circuit
- Rise in *real component* of injected current suggests resistive ground fault
- Ignores *capacitive* current due to isophase bus and surge caps
  - Uses it for self-diagnostic and system integrity

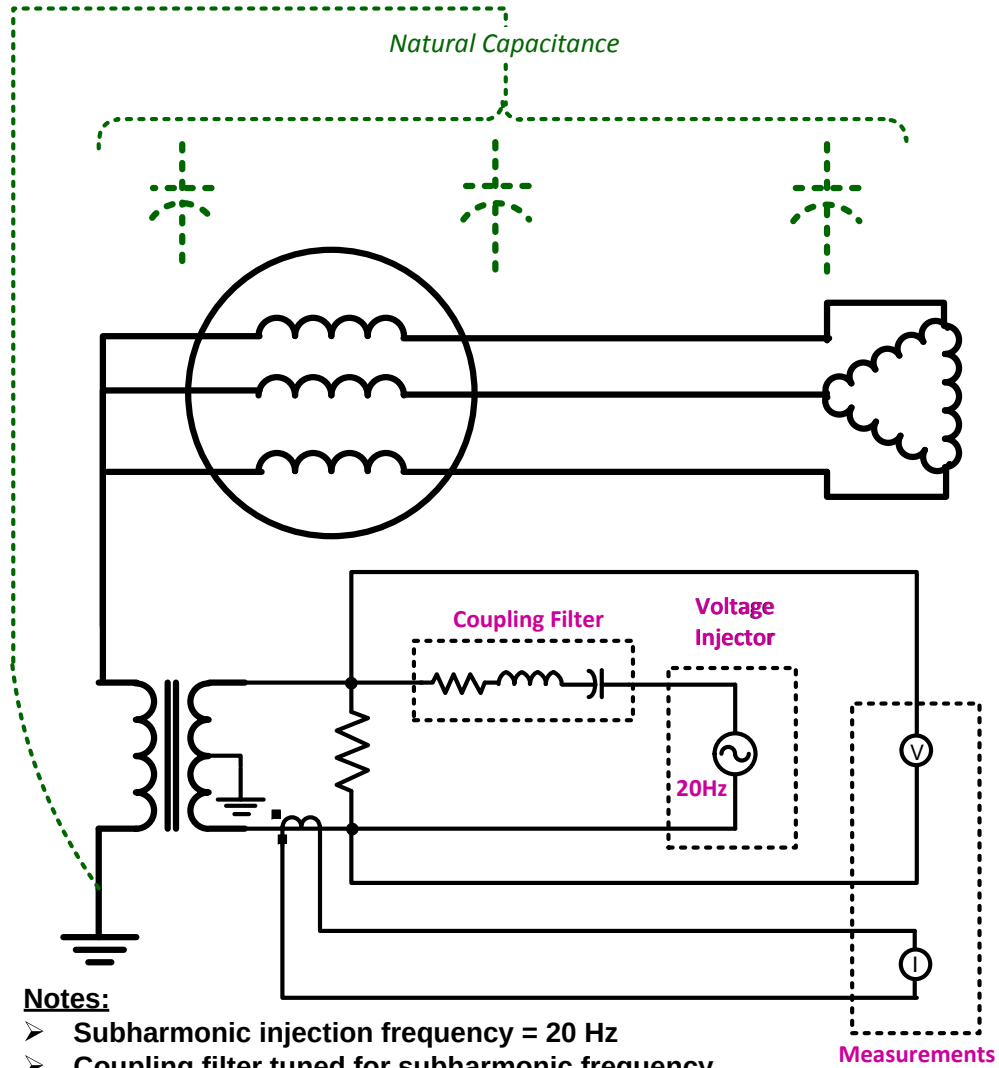

Notes:

- **Subharmonic injection frequency = 20 Hz**
- **Coupling filter tuned for subharmonic frequency**
- **Measurement inputs tuned to respond to subharmonic frequency**

64S: Stator Ground Faults – Subharmonic Injection

- Injects subharmonic frequency into generator neutral
  - Does not rely on third harmonic signature of generator
- Provides full coverage protection
- Provides on and offline protection, prevents serious damage upon application of excitation
- Frequency independent

Stator Ground Faults: High Z Element Coverage

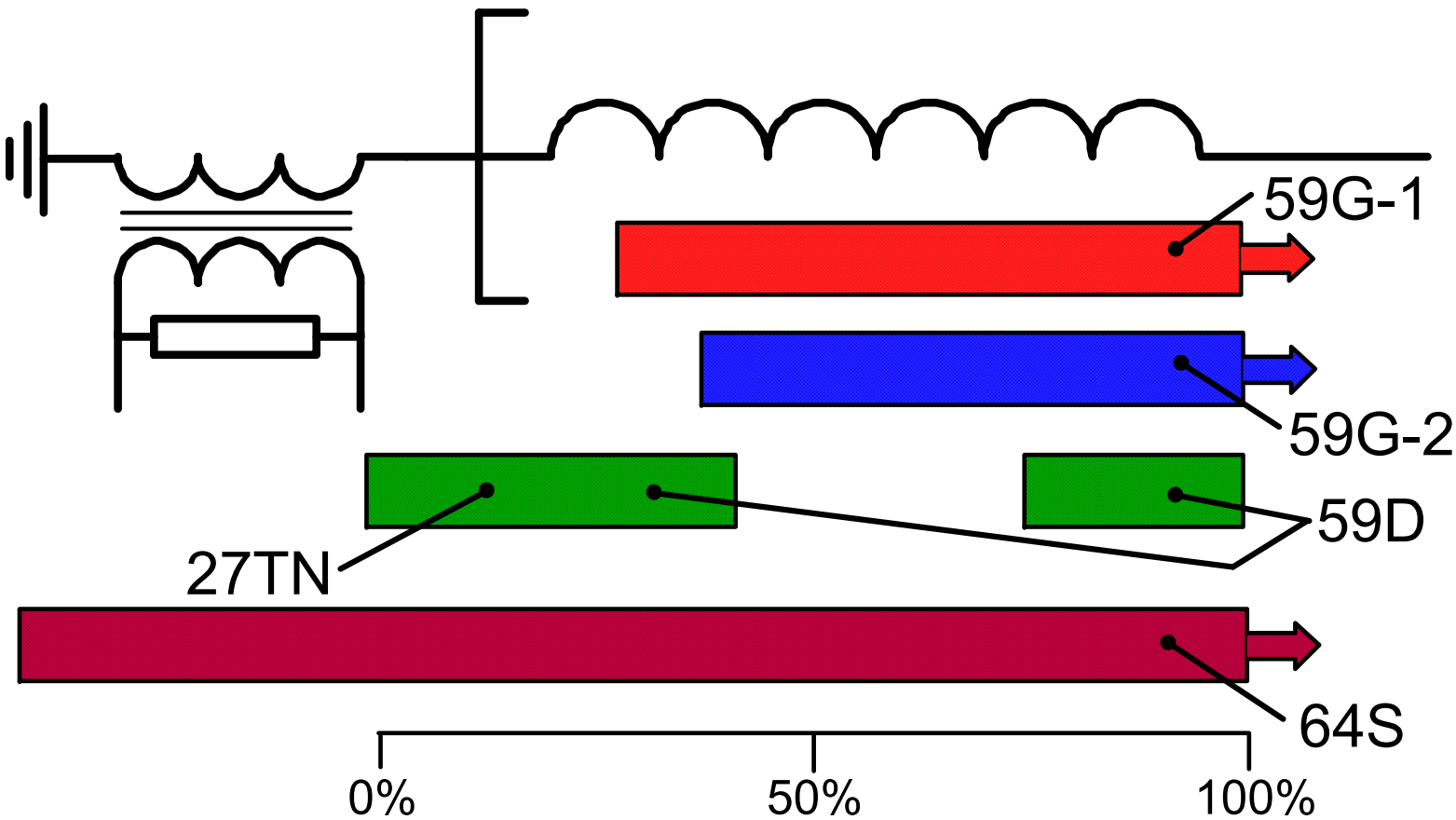

Brushed and "Brushless" Excitation

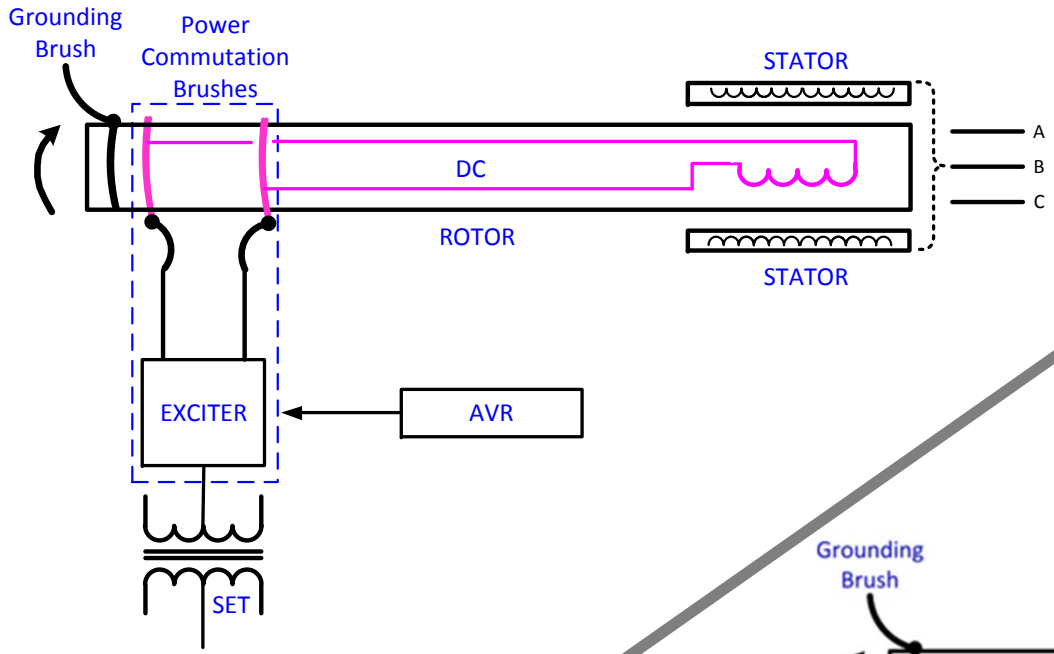

Brushed

"Brushless"

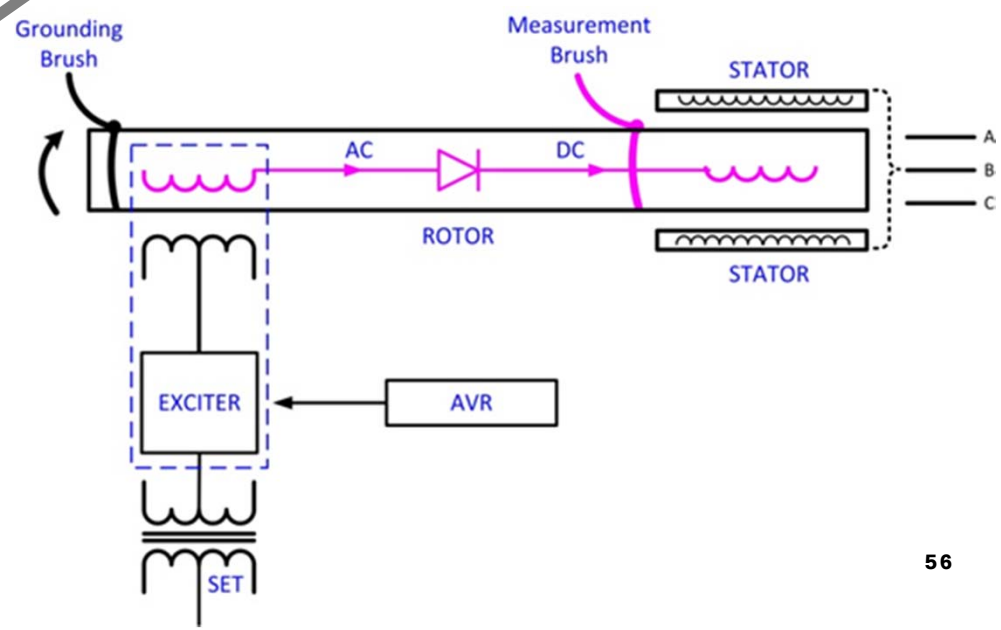

Field/Rotor Ground Fault

- Traditional field/rotor circuit ground fault protection schemes employ DC voltage detection
  - Schemes based on DC principles are subject to security issues during field forcing, other sudden shifts in field current and system transients

DC-Based 64F

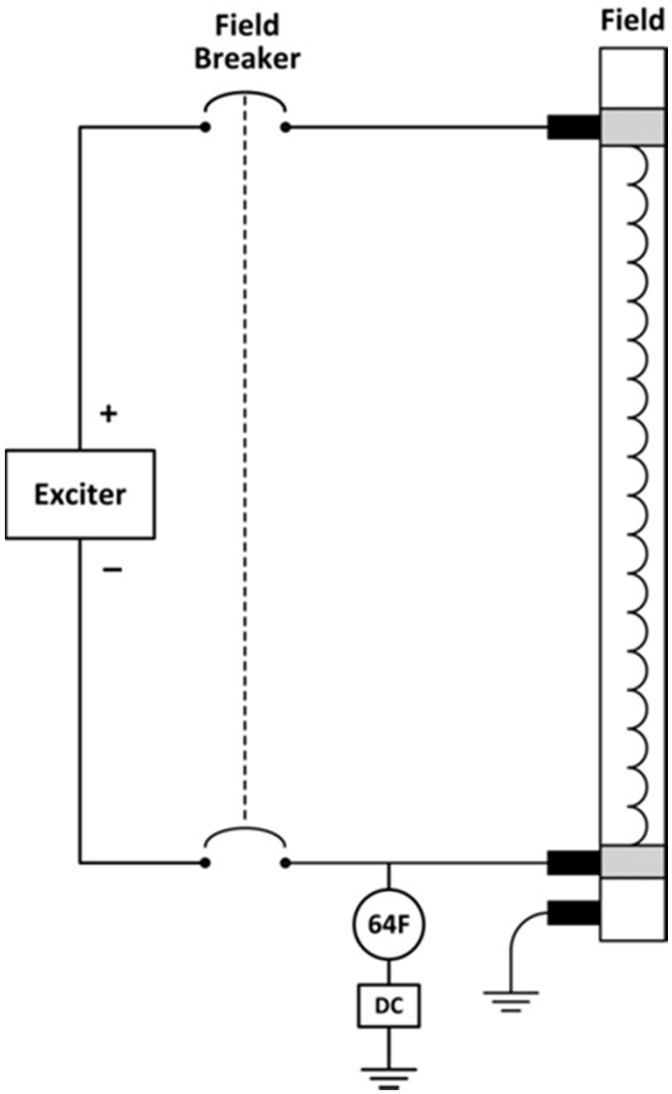
Field Breaker
Field
+
Exciter
–
64F
DC

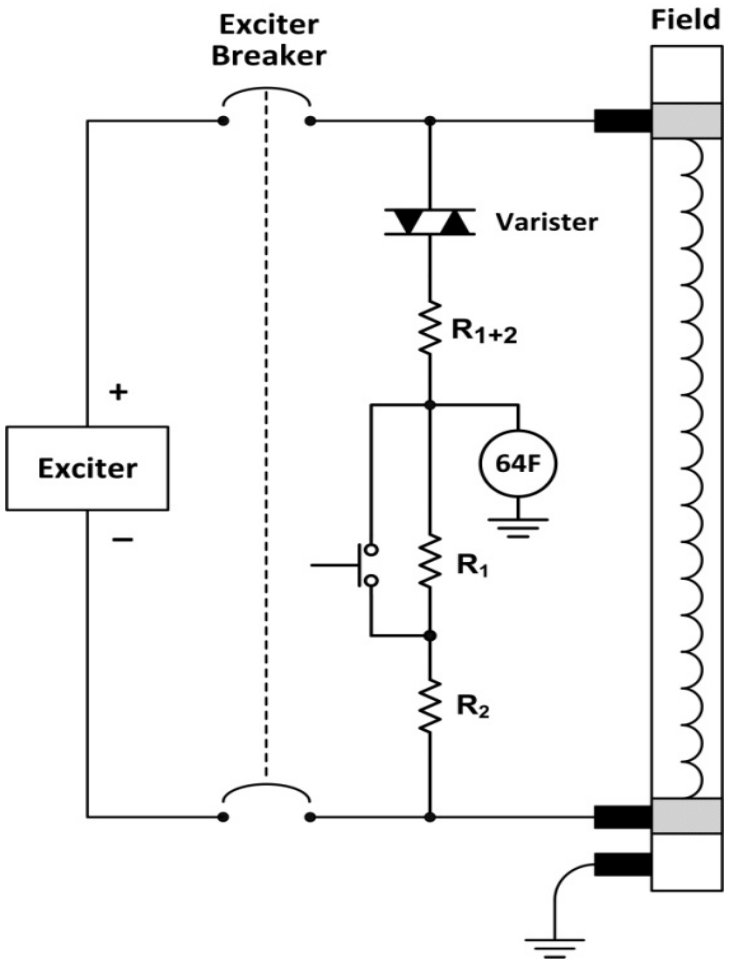
Exciter Breaker
Field
Varister
R1+2
+
Exciter
–
64F
R1
R2

Field/Rotor Ground Fault (64F)

- To mitigate the security issues of traditional DC-based rotor ground fault protection schemes, AC injection based protection may be used
  - AC injection-based protection ignores the effects of sudden DC current changes in the field/rotor circuits and attendant DC scheme security issues

Advanced AC Injection Method

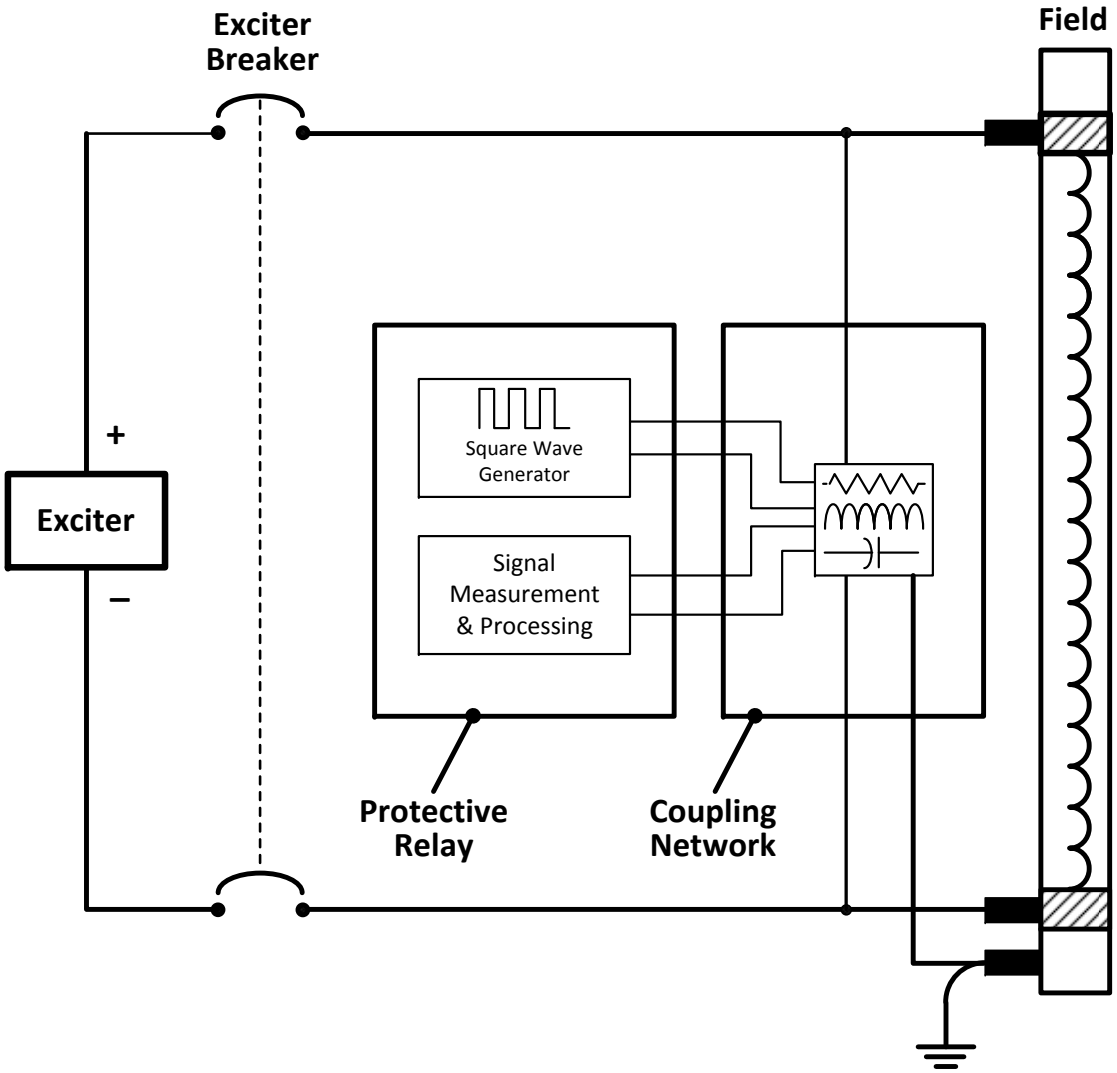

Advanced AC Injection Method: Advantages

- Scheme is secure against the effects of DC transients in the field/rotor circuit
  - DC systems are prone to false alarms and false trips, so they sometimes are ignored or rendered inoperative, placing the generator at risk
  - The AC system offers greater security so this important protection is not ignored or rendered inoperative

- Scheme can detect a rise in impedance which is characteristic of grounding brush lift-off
  - In brushless systems, the measurement brush may be periodically connected for short time intervals
  - The brush lift-off function must be blocked during the time interval the measurement brush is disconnected

Rotor Ground Fault Measurement

- Plan a shutdown to determine why impedance is lowering, versus an eventual unplanned trip!
- When resistive fault develops, **V_f goes down**

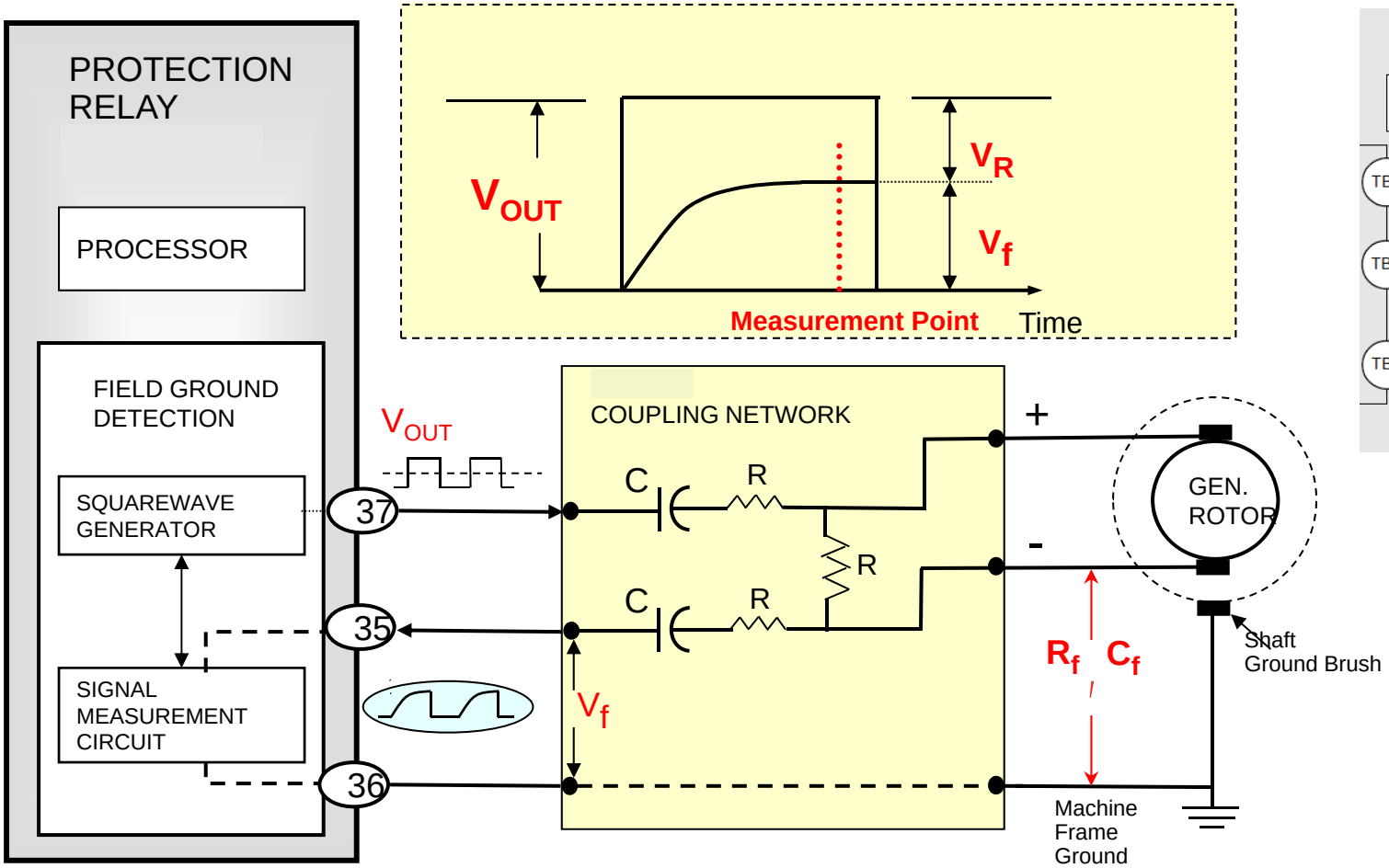

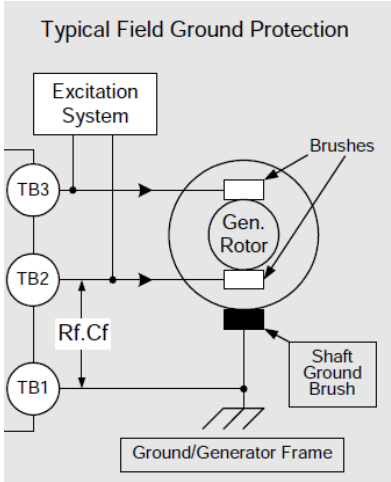

64B: Brush Lift Off

- **Commutation brush lift-off will lead to:**
  - **Arcing**
  - **Tripping on loss-of-field**
- **Grounding brush lift-off can lead to:**
  - **Stray currents that cause bearing pitting**

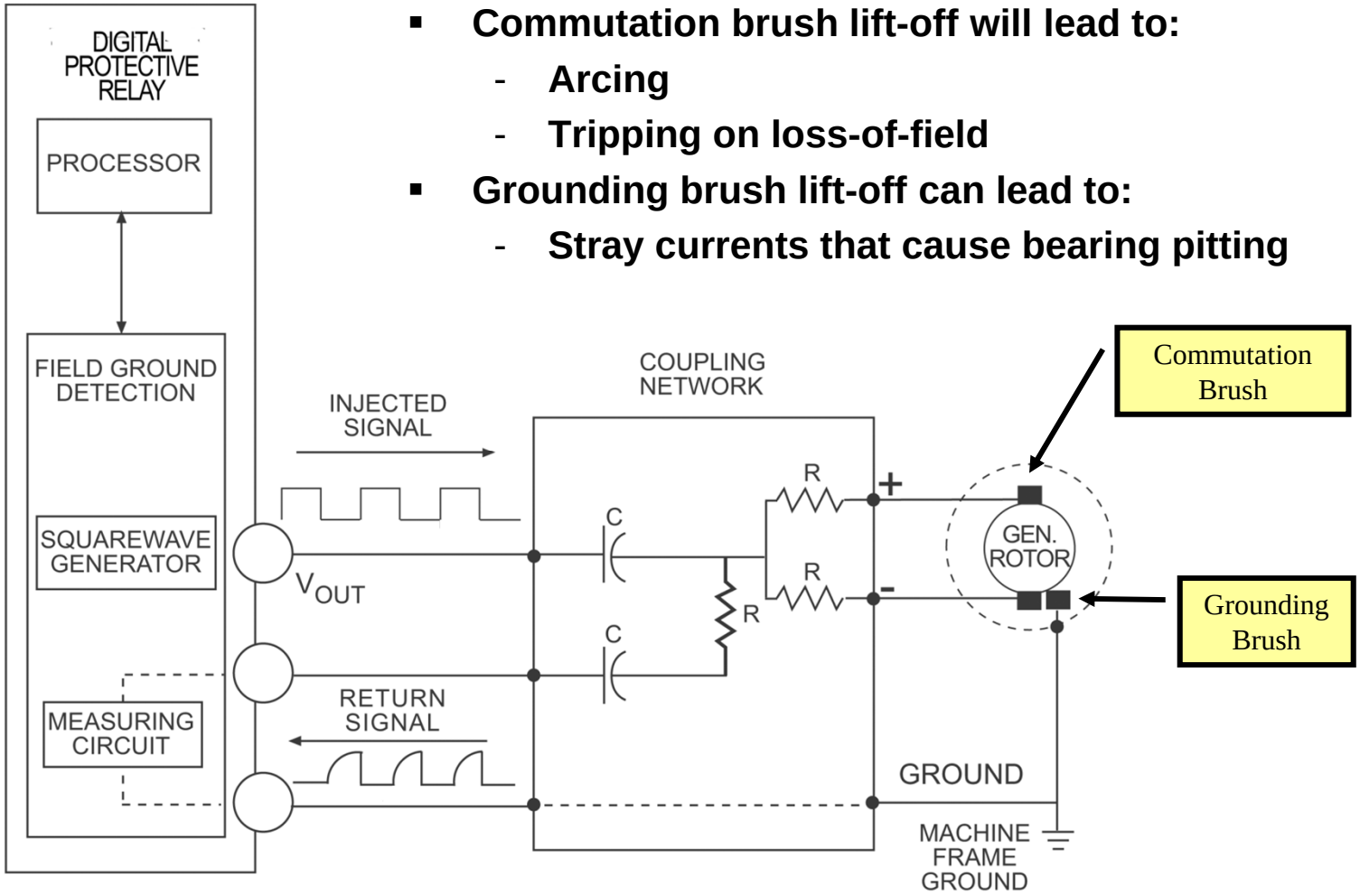

64B: Brush Lift Off

- **As brushes lift-off, the sawtooth wave's return signal slope gets less rounded, which is detected as a rise in voltage**

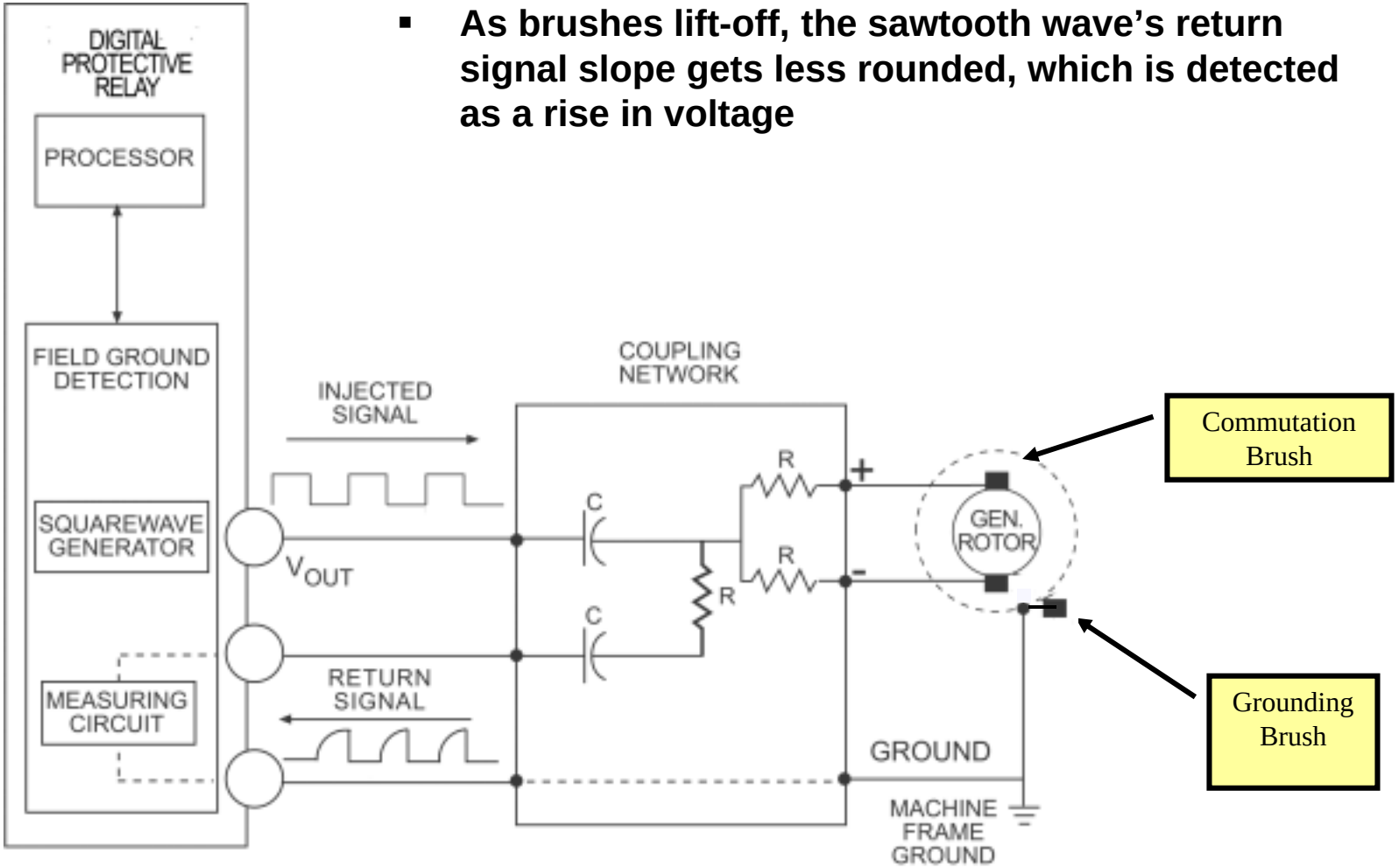

Brush Lift-Off Measurement

- When brush lifts off, **V_f goes up**

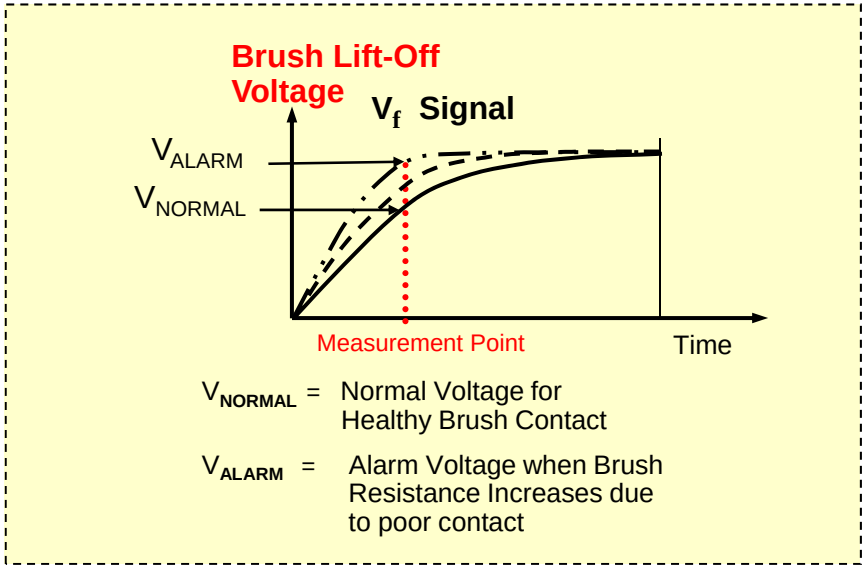

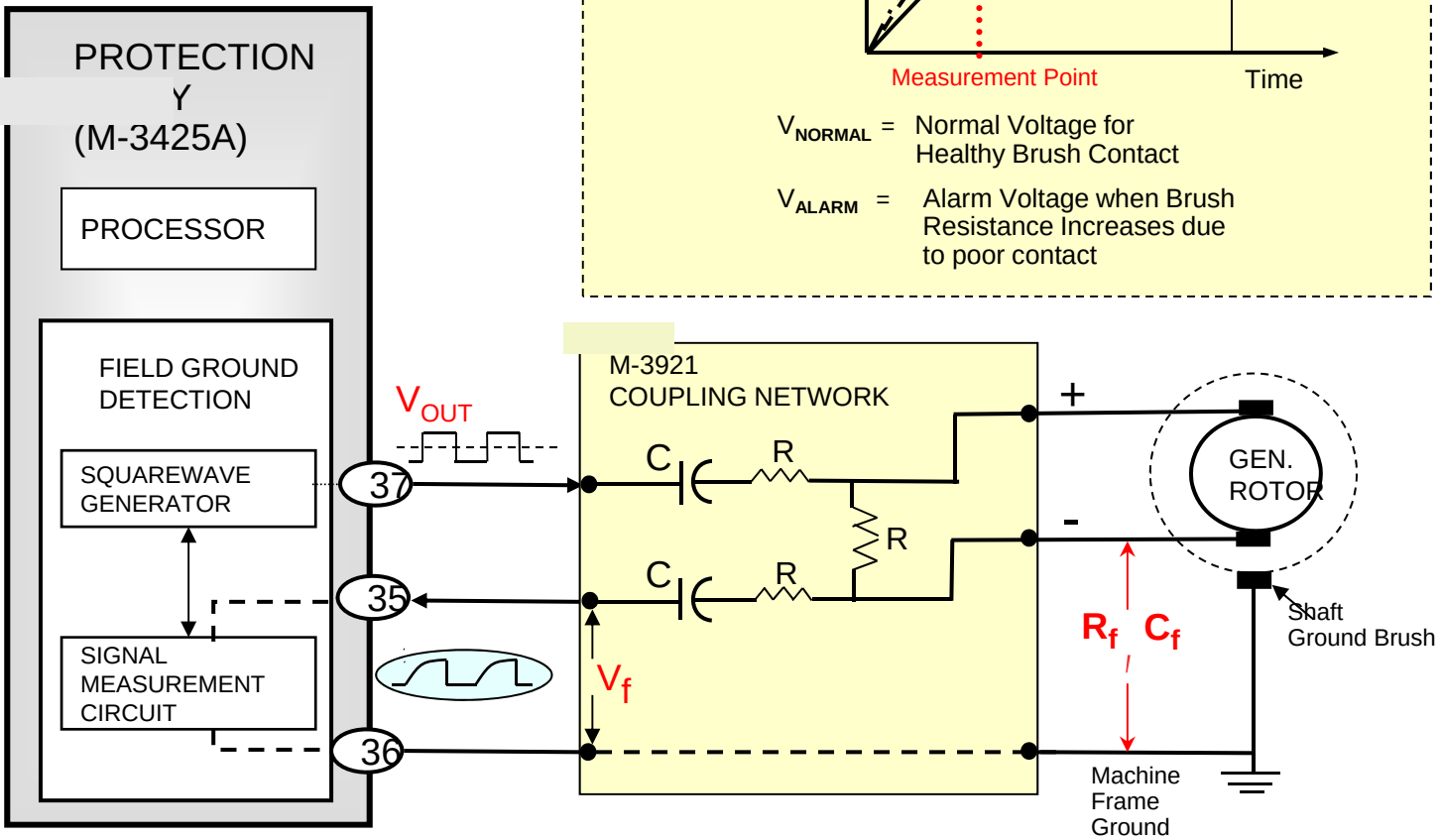

64B: Brush Lift Off

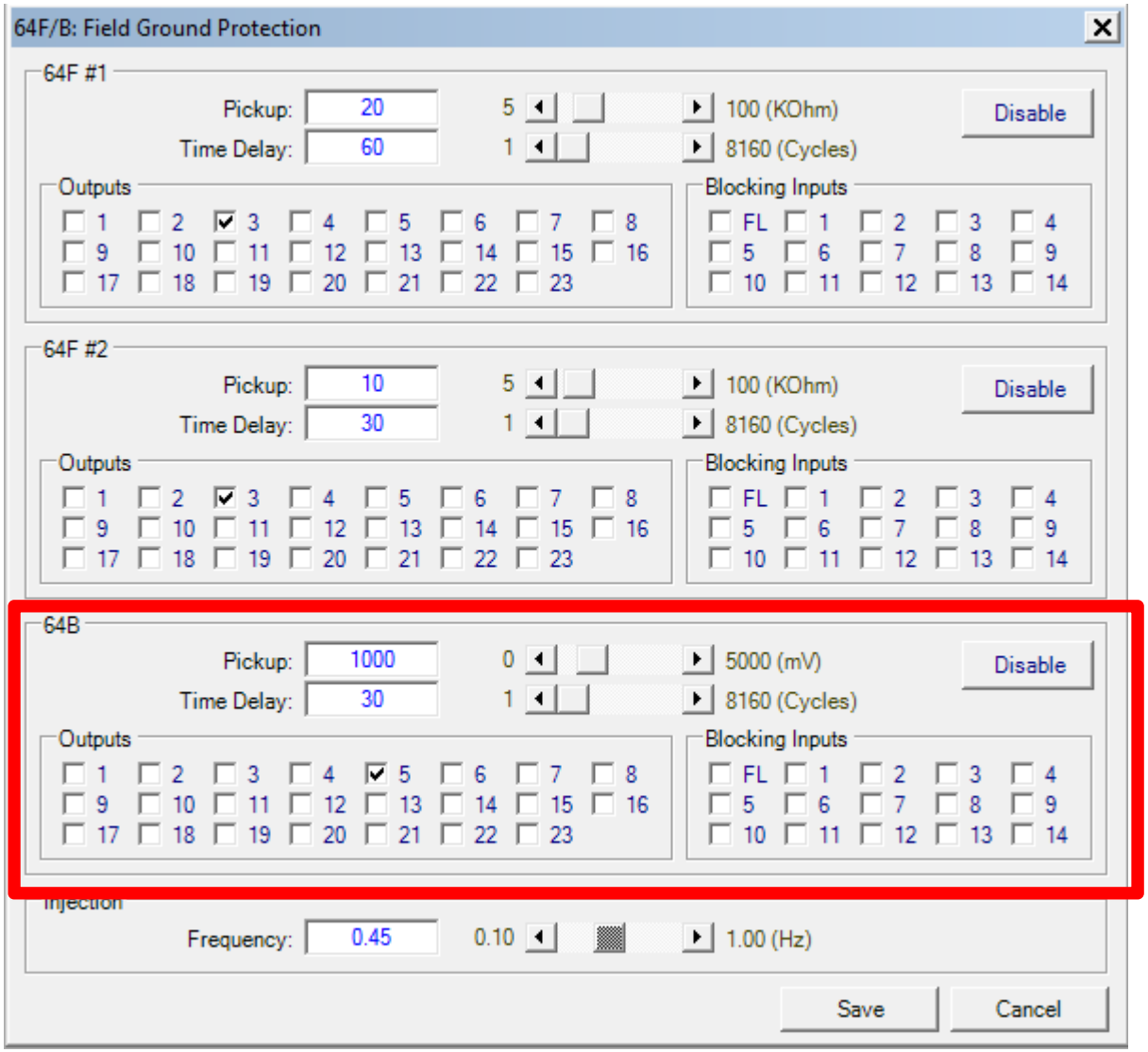

ALARM

Field/Rotor Ground Faults

- 64F/B
  - It is possible to apply two systems and have redundancy
  - The switch system is initiated by manual means or by monitoring relay self diagnostic contacts

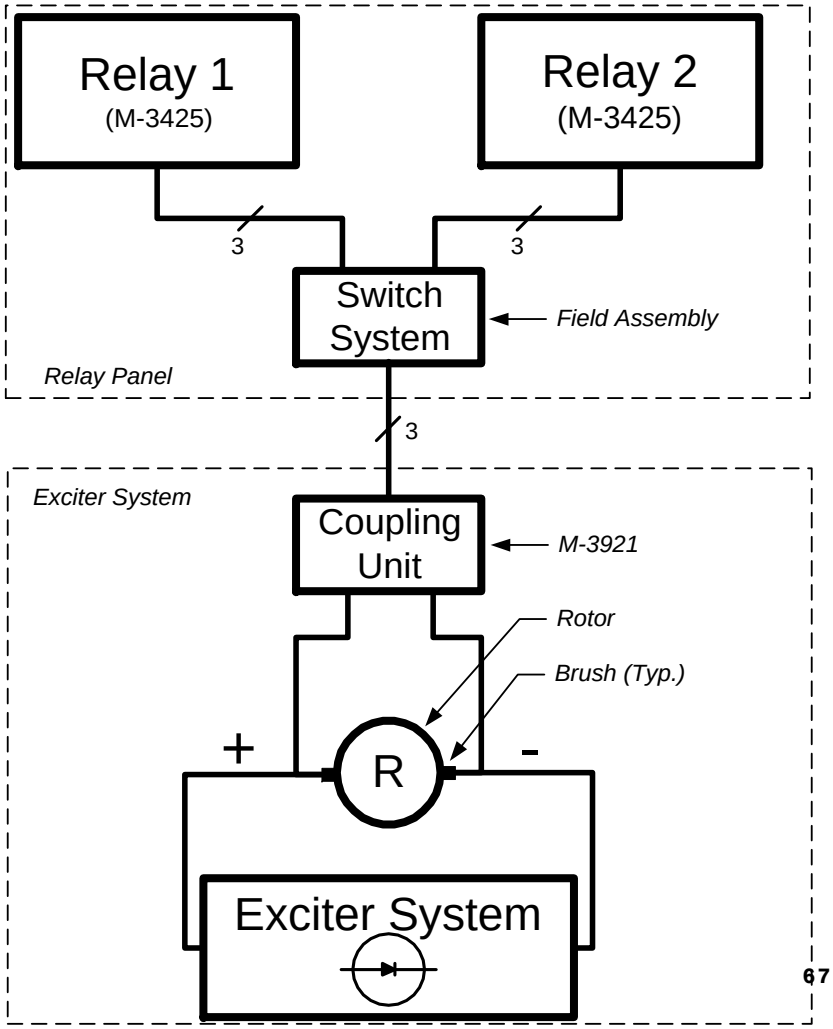

Stator Phase Faults

- 87G – Phase Differential (primary for in-zone faults)
  - What goes into zone must come out
  - Challenges to Differential
    - CT replication issues: Remenant flux causing saturation
    - DC offset desensitization for energizing transformers and large load pick up
    - Must work properly from 10 Hz to 80Hz so it operates correctly at off-nominal frequencies from internal faults during startup
    - May require multiple elements for CGT static start
  - Tactics:
    - Use variable percentage slope
    - Operate over wide frequency range
    - Uses I_{RMS}/I_{FUND} to adaptively desensitize element when challenged by DC offset for security
      - DC offset can occur from black starting and close-in faults

87 Characteristic

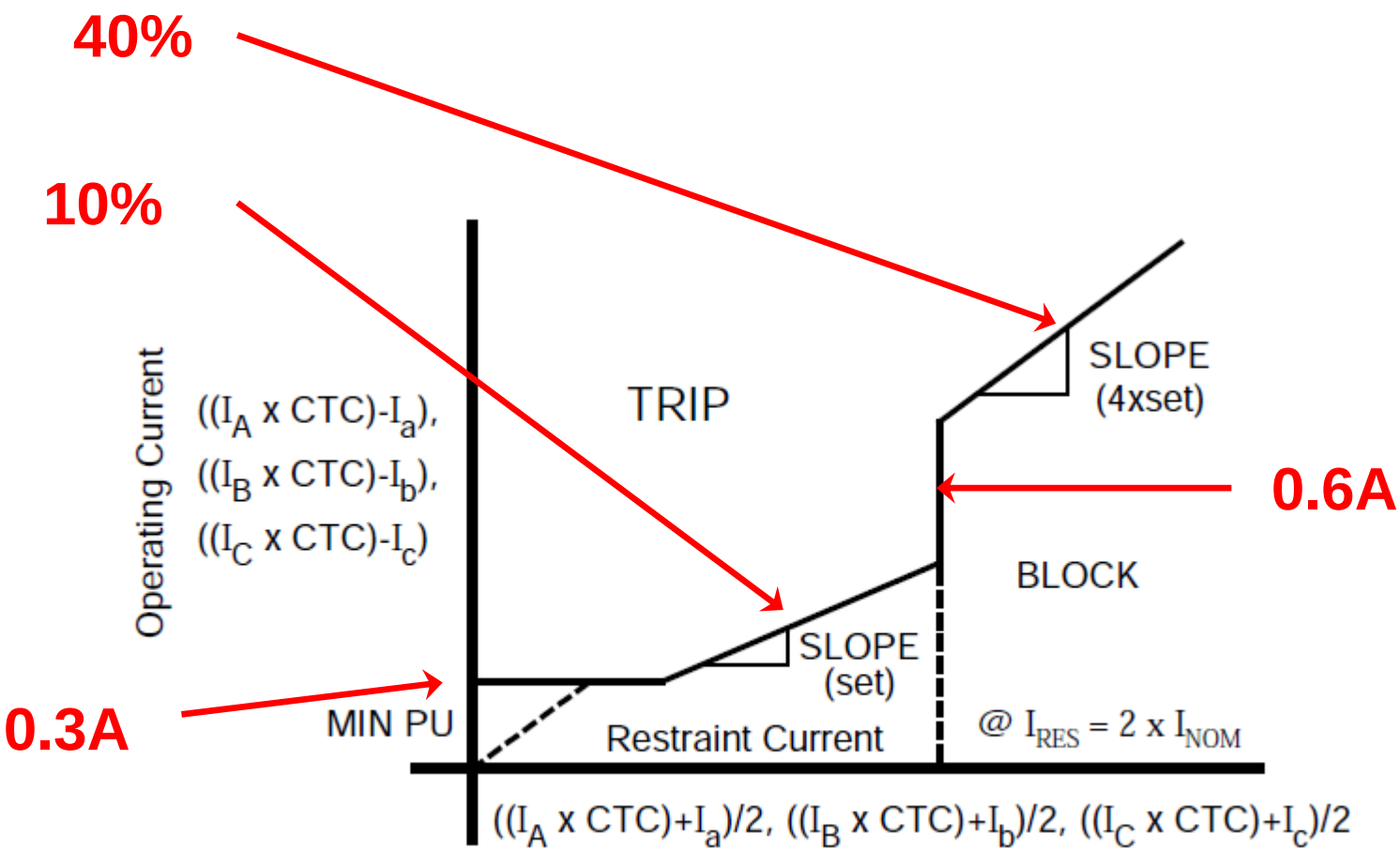

CTC = CT Correction Ratio = Line CTR/Neutral CTR
Used when Line and Neutral CTs have different ratios

CT Remanence and Performance

- Magnetization left behind in CT iron after an external magnetic field is removed
- Caused by current interruption with DC offset
- CT saturation is increased by other factors working alone or in combination:
  - High system X/R ratio which increases time constant of the CT saturation period
  - CT secondary circuit burden which causes high CT secondary voltage
  - High primary fault or through-fault current which causes high secondary CT voltage

CT Saturation [1]

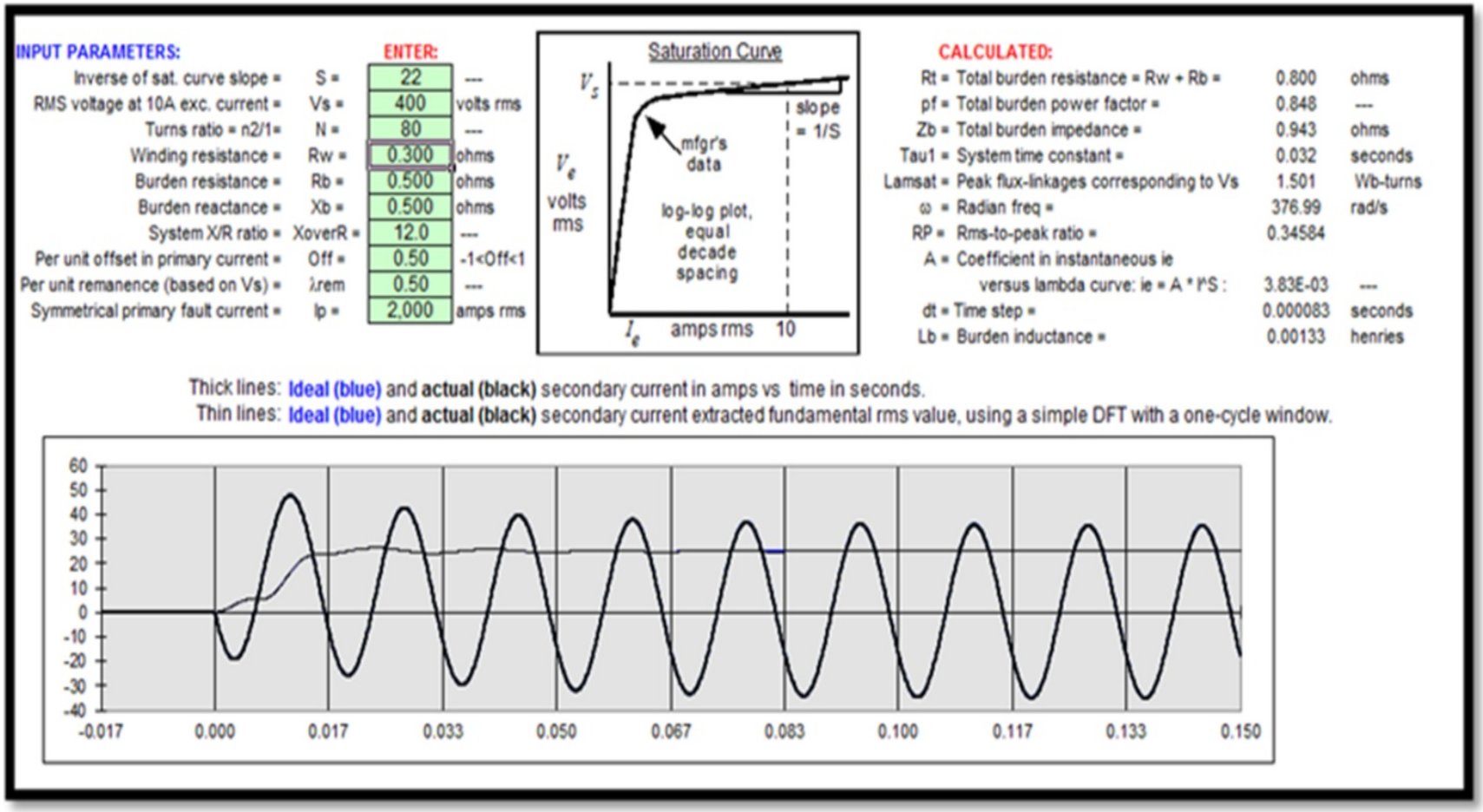

Fig. 2: 400:5, C400, R=0.5, Offset = 0.5, 2000A

CT Saturation [2]

INPUT PARAMETERS:

		ENTER:	
Inverse of sat. curve slope =	S =	22	---
RMS voltage at 10A exc. current =	Vs =	400	volts rms
Turns ratio = n2/1=	N =	80	---
Winding resistance =	Rw =	0.300	ohms
Burden resistance =	Rb =	0.500	ohms
Burden reactance =	Xb =	0.500	ohms
System X/R ratio =	XoverR =	12.0	---
Per unit offset in primary current =	Off =	0.75	-1<Off<1
Per unit remanence (based on Vs) =	λrem	0.75	---
Symmetrical primary fault current =	Ip =	8,000	amps rms

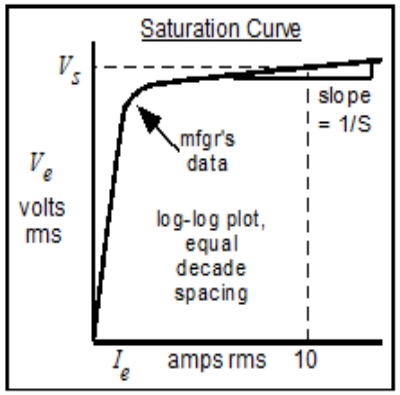

CALCULATED:

Rt =	Total burden resistance = Rw + Rb =	0.800	ohms
pf =	Total burden power factor =	0.848	---
Zb =	Total burden impedance =	0.943	ohms
Tau1 =	System time constant =	0.032	seconds
Lamsat =	Peak flux-linkages corresponding to Vs	1.501	Wb-turns
ω =	Radian freq =	376.99	rad/s
RP =	Rms-to-peak ratio =	0.34584	
A =	Coefficient in instantaneous ie versus lambda curve: ie = A * l^S :	3.83E-03	---
dt =	Time step =	0.000083	seconds
Lb =	Burden inductance =	0.00133	henries

Thick lines: **Ideal (blue)** and **actual (black)** secondary current in amps vs time in seconds.
Thin lines: **Ideal (blue)** and **actual (black)** secondary current extracted fundamental rms value, using a simple DFT with a one-cycle window.

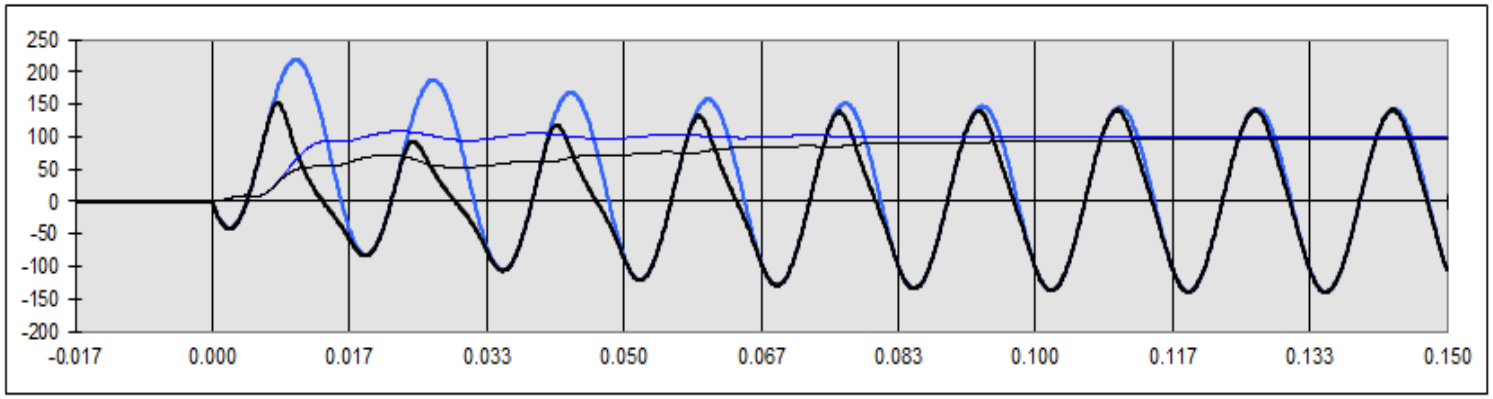

Fig. 6: 400:5, C400, R=0.75, Offset = 0.75, 8000A

Generator Protection

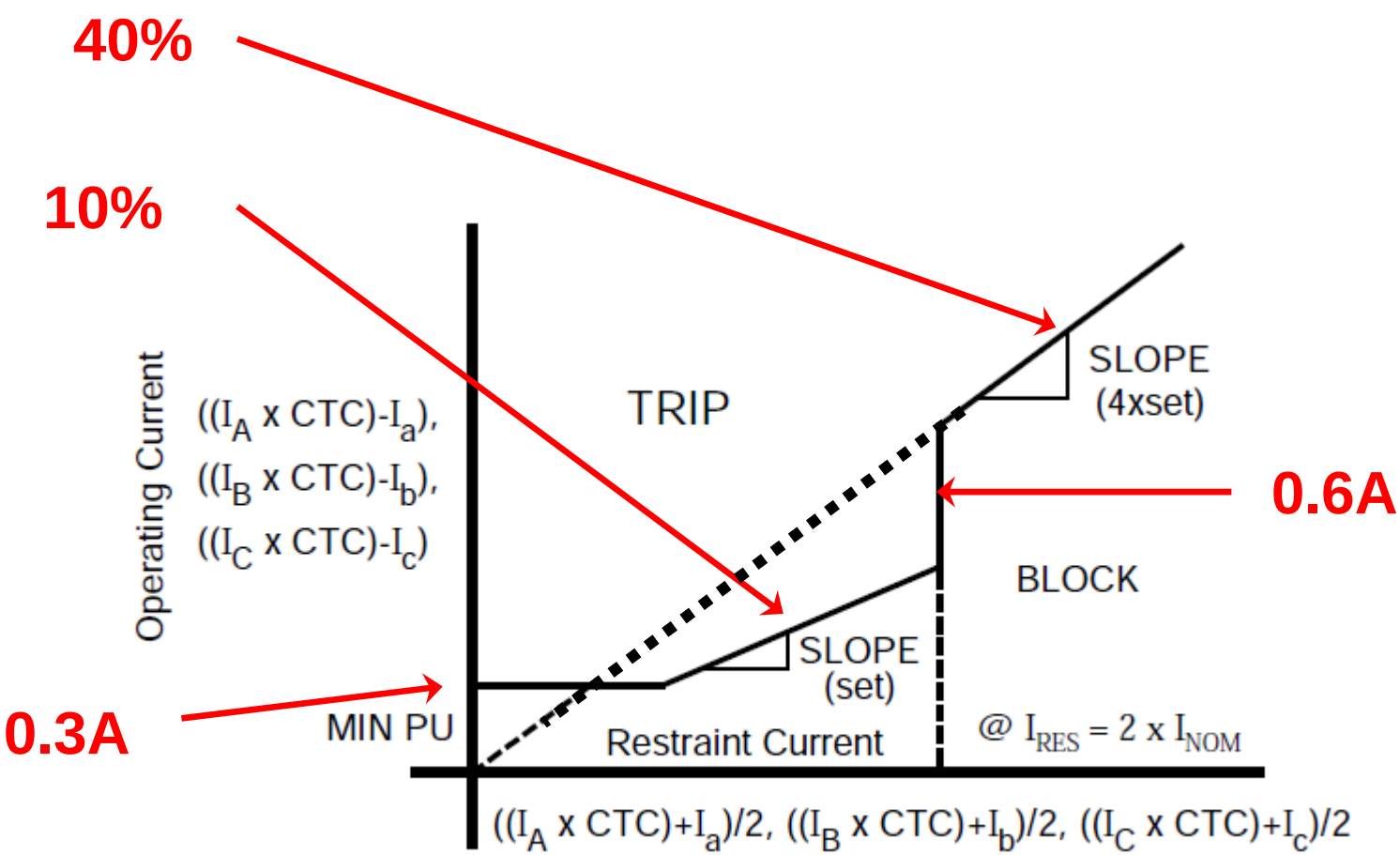

CTC = CT Correction Ratio = Line CTR/Neutral CTR
Used when Line and Neutral CTs have different ratios

46: Negative Sequence Current

- **Typically caused by open circuits in system**

  -Downed conductors

  -Stuck poles switches and breakers

- **Unbalanced phase currents create negative sequence current in generator stator and induces a double frequency current in the rotor**

- **Induced current (120 Hz) into rotor causes surface heating of the rotor**

Rotor End Winding Construction

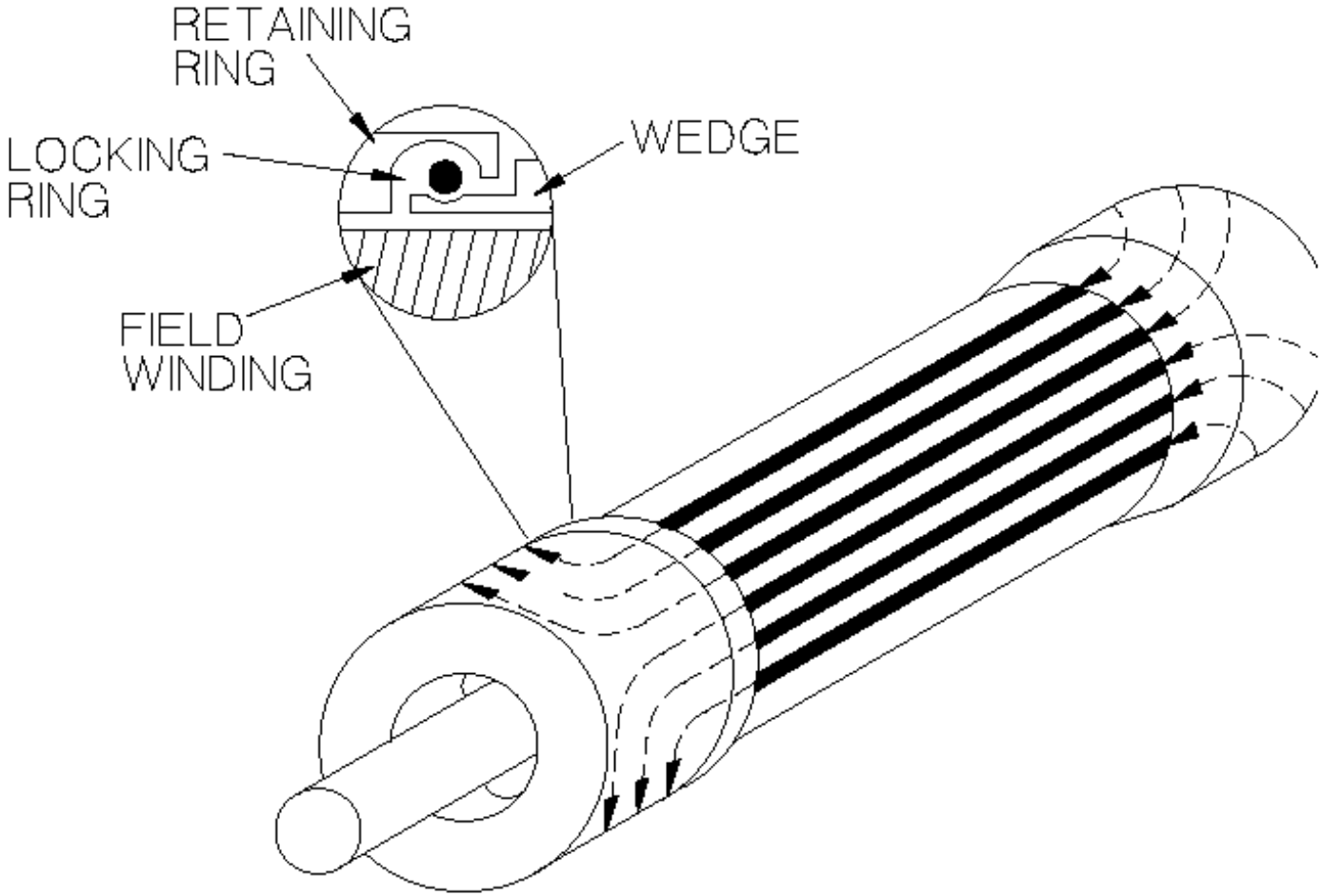

Currents Flow in the Rotor Surface

Negative Sequence Current:
Constant Withstand Generator Limits

- **Salient Pole**
  - With connected amortisseur 10%
  - With non-connected amortisseur 5%
- **Cylindrical**
  - Indirectly 10%
  - Directly cooled - to 960 MVA 8%
    - 961 to 1200 MVA 6%
    - 1200 to 1500 MVA 5%

Negative Sequence Current: Constant Withstand Generator Limits

- **Nameplate**
  - Negative Sequence Current (I2) Constant Withstand Rating
  - "K" Factor

$$I_2^2 T = K$$

where K = Manufacturer Factor (the larger the generator the smaller the K value)

Generator Protection

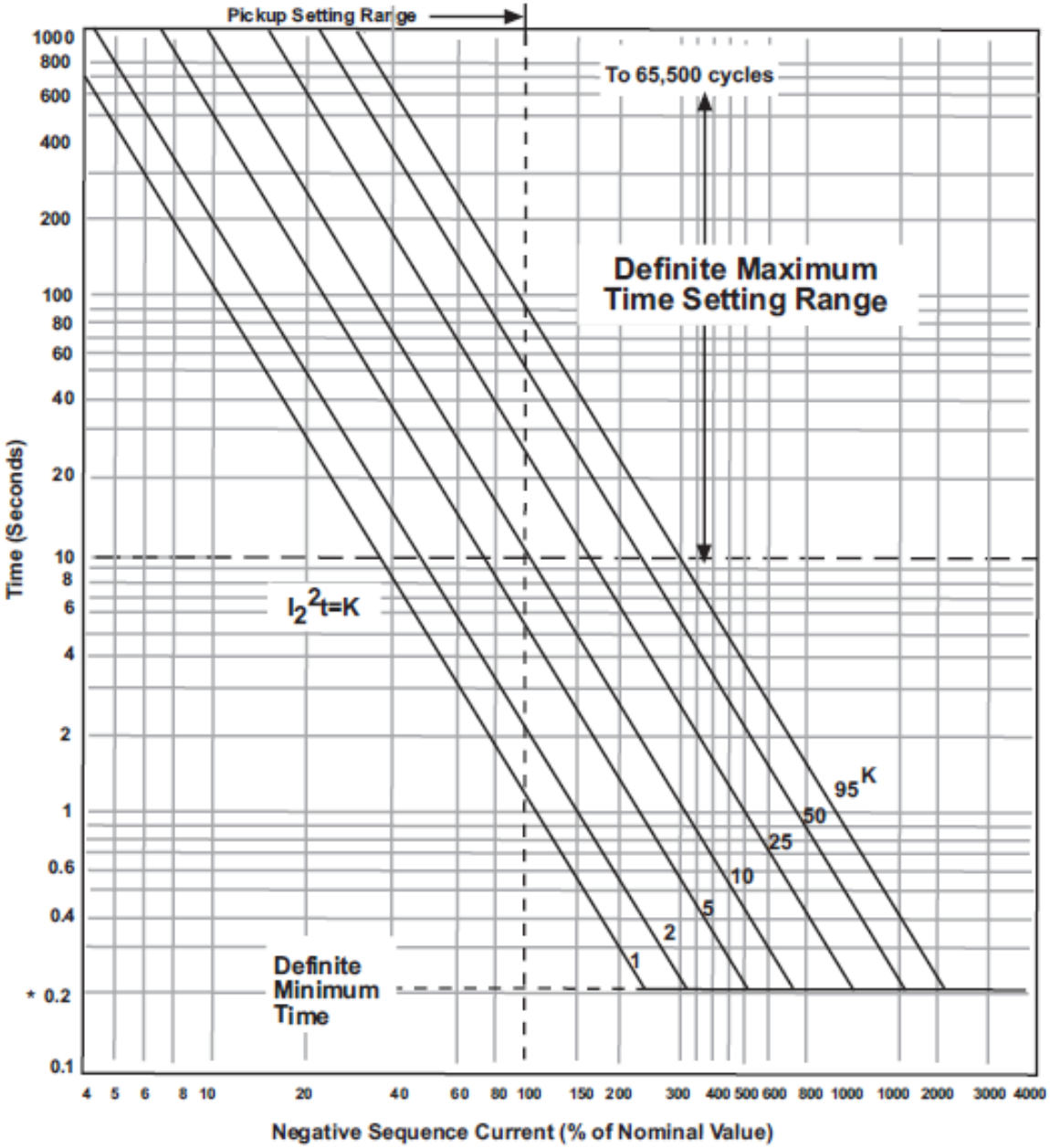

Generator Ratings

Typical
<u>K Values</u>

Salient Pole Generators
40

Cylindrical Generators
30

46: Negative Sequence Electromechanical Relays

- Sensitivity restricted and cannot detect I_2 levels less than 60% of generator rating
- Fault backup provided
- Generally insensitive to load unbalances or open conductors

46: Negative Sequence Digital Relay

- Protects generator down to its continuous negative sequence current (I_2) rating vs. electromechanical relays that don't detect levels less than 60%
- Fault backup provided
- Can detect load unbalances
- Can detect open conductor conditions

Overexcitation (24)

- Measured
  - High Volts/Hertz ratio
  - Normal = 120V/60Hz = 1pu
  - Voltage up, and/or frequency low, make event
- Issues
  - Overfluxing of metal causes localized heating
  - Heat destroys insulation
  - Affects generators and transformers

Overexcitation (24)

Causes of V/HZ Problems

- Generator voltage regulator problems
  - Operating error during off-line manual regulator operation
  - Control failure
  - VT fuse loss in voltage regulator (AVR) sensing voltage
- System problems
  - Unit load rejection: full load, partial rejection
  - Power system islanding during major disturbances
  - Ferranti effect
  - Reactor out
  - Capacitors in
  - Runaway LTCs

Overexcitation (24)

Modern Protection

- Definite time elements
  - Curve modify
  - Alarm
- Inverse curves
  - Select curve type for best coordination to manufacturers recommendations
  - Employ settable reset timer
    - Provides “thermal memory” for repeat events

Overexcitation (24)

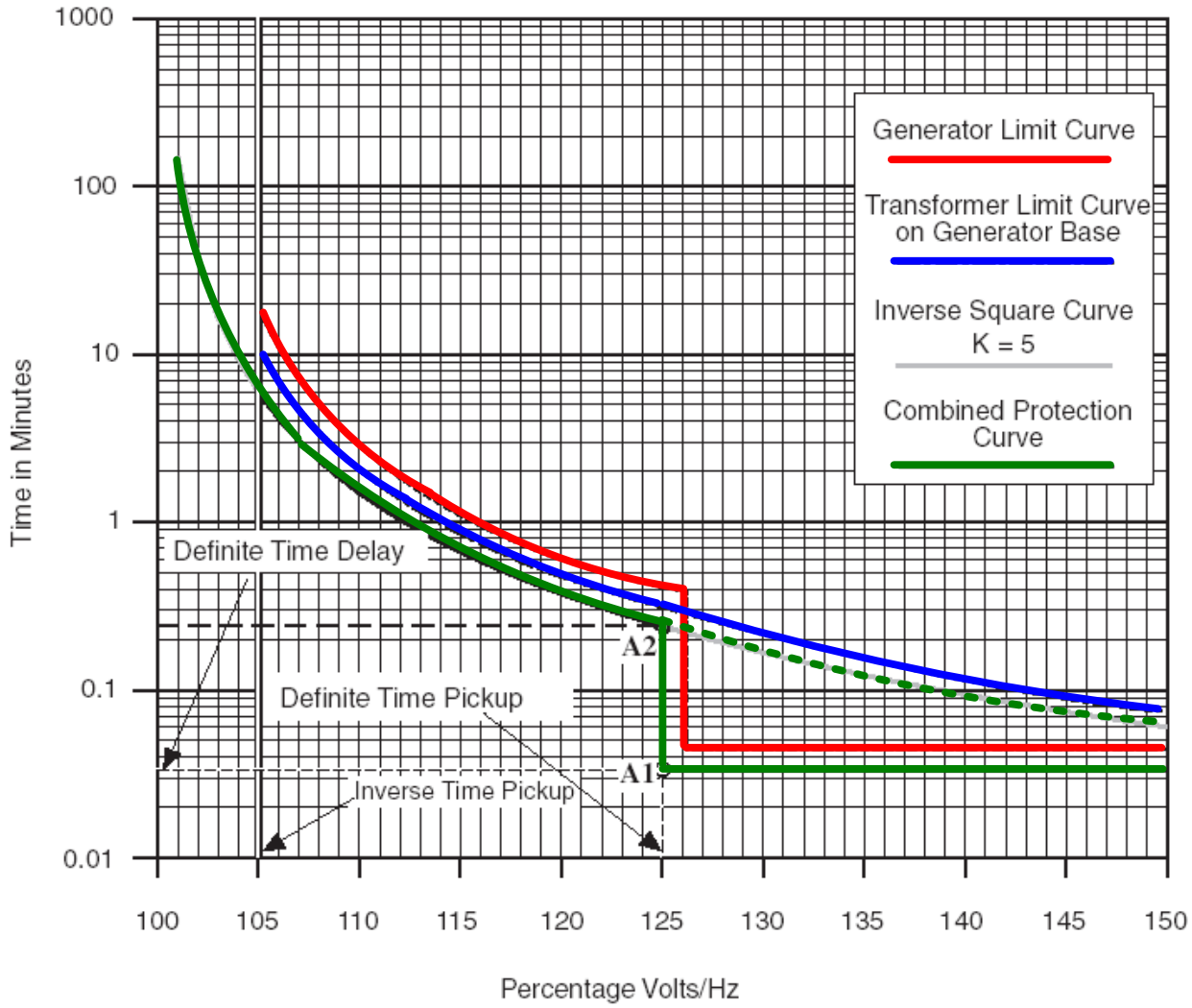

Example plot using definite time and inverse curve

Overexcitation (24)

Modern Protection

- **V/Hz measurement operational range: 2-80 Hz**

- Necessary to avoid damage to steam turbine generators during rotor pre-warming at startup
- Necessary to avoid damage to converter-start gas turbine generators at startup
- In both instances, the generator frequency during startup and shut down can be as low as 2 Hz

NOTE: An Overvoltage (59) function, designed to work properly up to 120 Hz, is important for Hydro Generators where the generators can experience high speed (high frequency) during full load rejection.

Since the V/Hz during this condition is low, the 24 function will not operate, and the 59 function will provide proper protection from overvoltage.

40: Loss of Field

Can adversely effect the generator and the system!!

- **Generator effects**
  - Synchronous generator becomes induction
  - Slip induced eddy currents heat rotor surface
  - High reactive current drawn by generator overloads stator
- **Power system effects**
  - Loss of reactive support
  - Creates a reactive drain
  - Can trigger system/area voltage collapse

Generator Protection

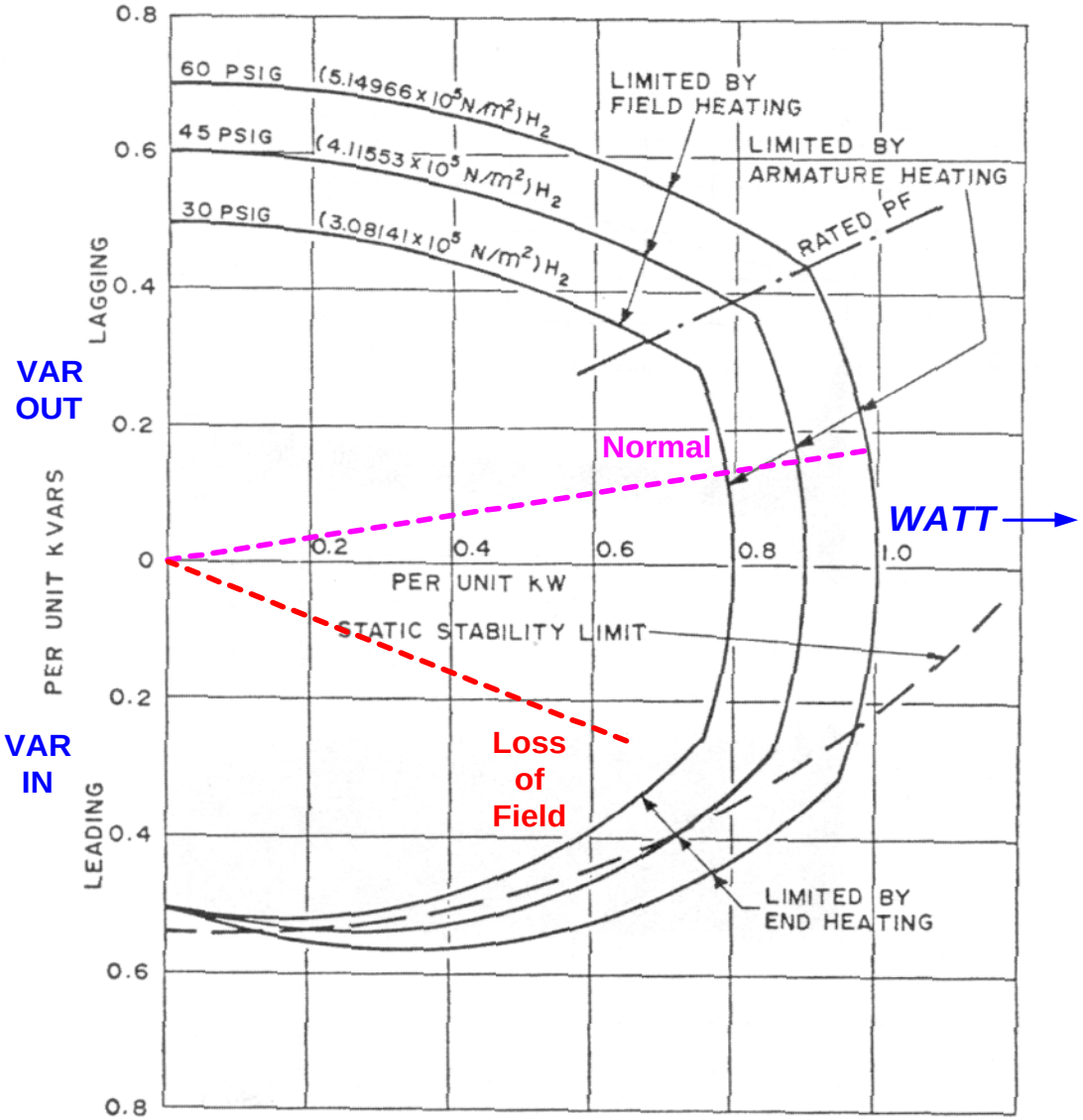

TYPICAL GENERATOR CAPABILITY CURVE

Generator capability curve viewed on the P-Q plane.

This info must be converted to the R-X plane.

Generator Protection

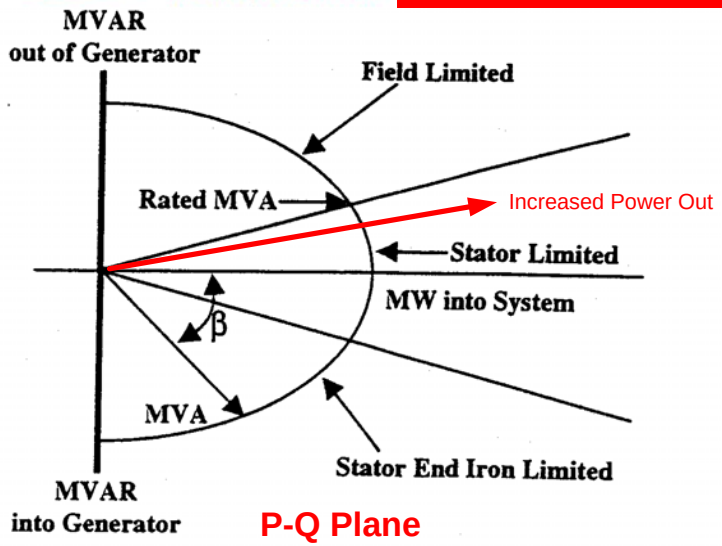

P-Q Plane

TRANSFORMATION FROM MW-MVAR TO R-X PLOT

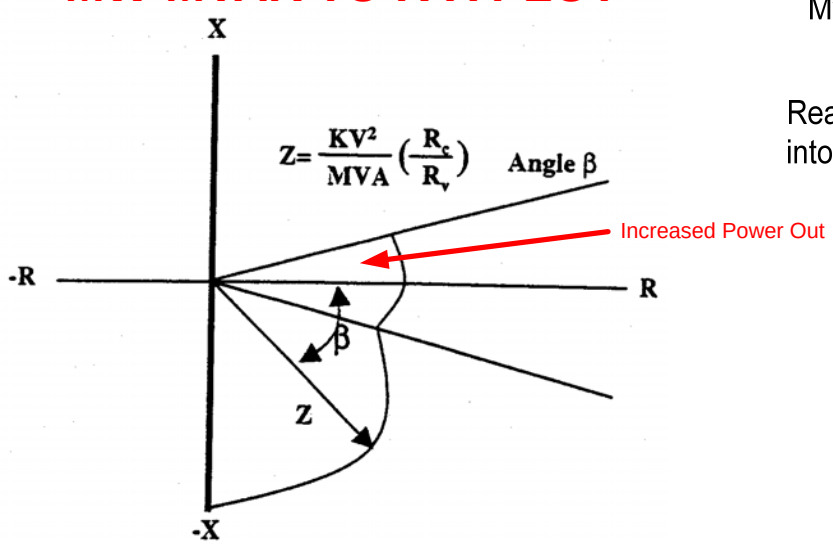

R-X Plane

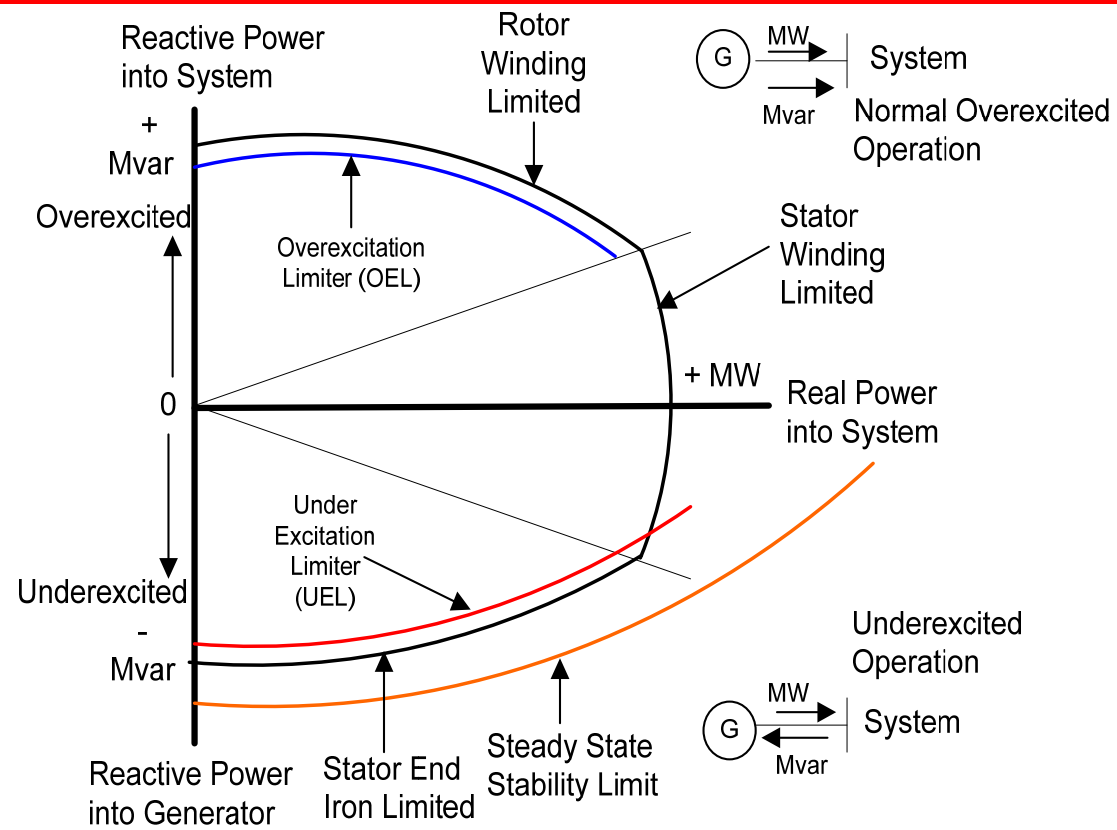

TYPICAL GENERATOR CAPABILITY CURVE Excitation Limiters and Steady State Stability

Generator Capability Curve

- Limiting factors are rotor and stator thermal limits
- Underexcited limiting factor is stator end iron heat
- Excitation control setting control is coordinated with steady-state stability limit (SSSL)
- Minimum excitation limiter (MEL) prevents exciter from reducing the field below SSSL

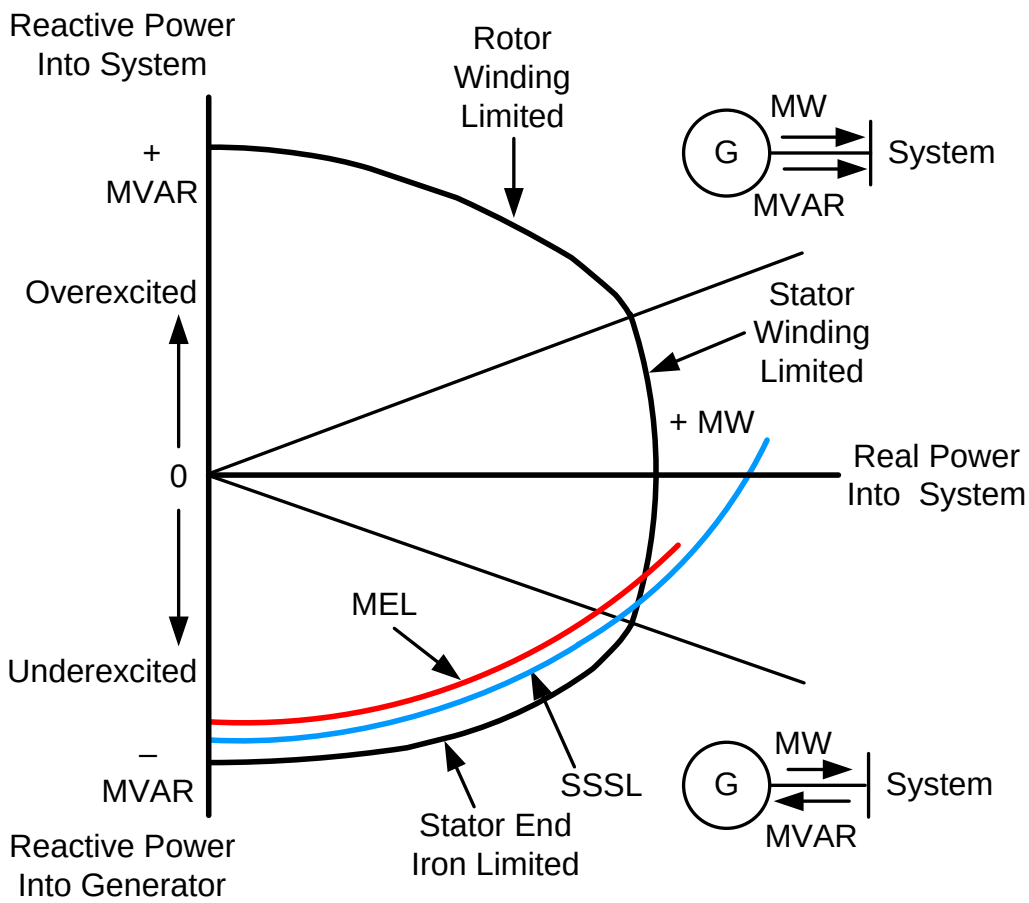

Loss of Field

GE and Westinghouse Methods

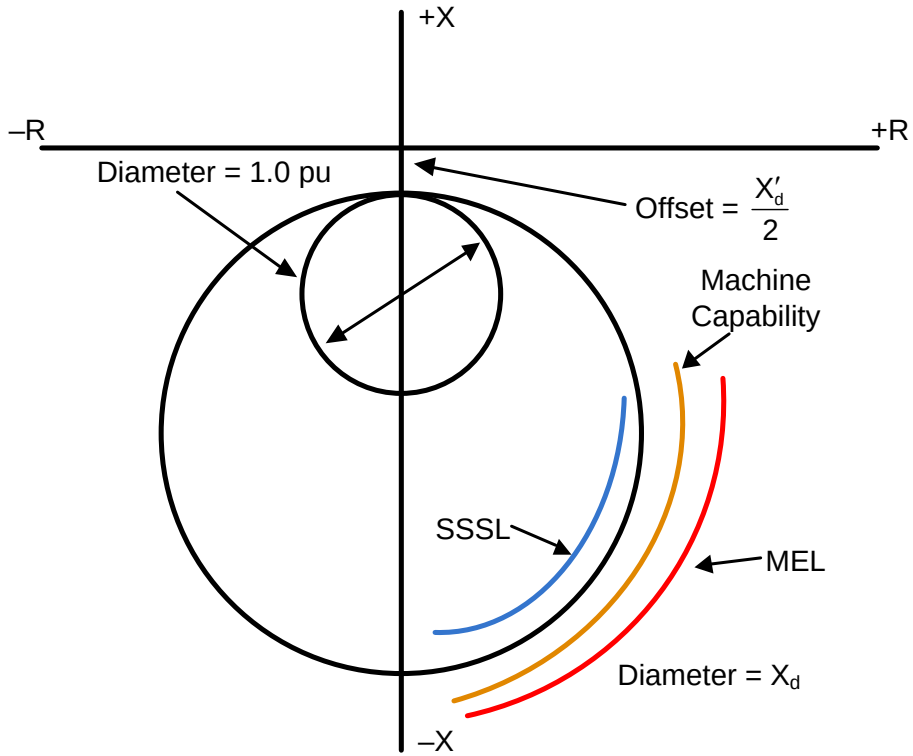

Two Zone Offset Mho
GE
CEH

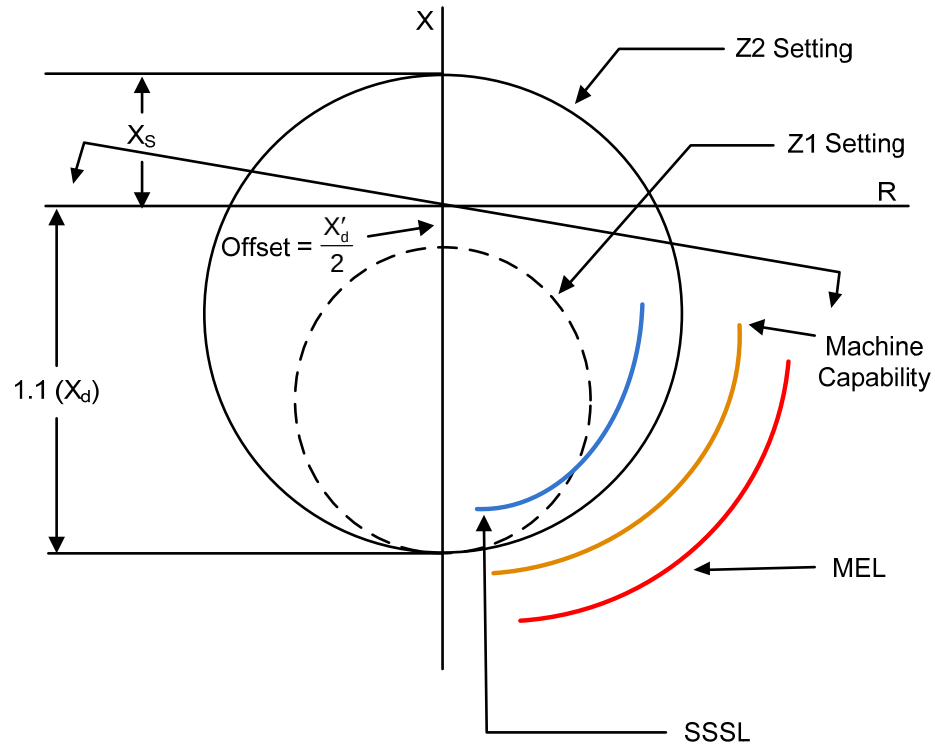

Impedance w/Directional Unit
Westinghouse
KLF

Loss of Field

Two Zone Offset Mho

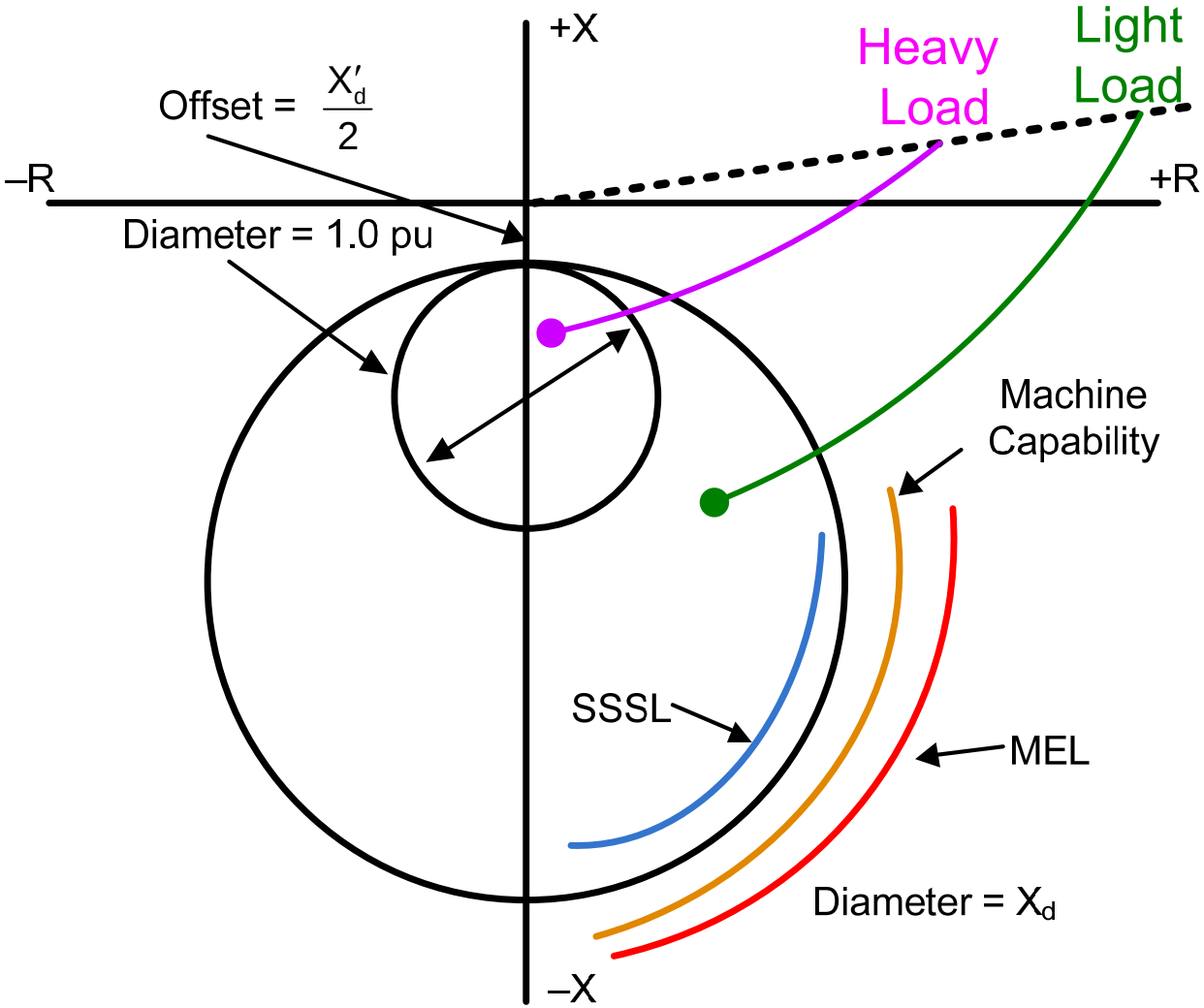

Loss of Field

Impedance w/Direction Unit

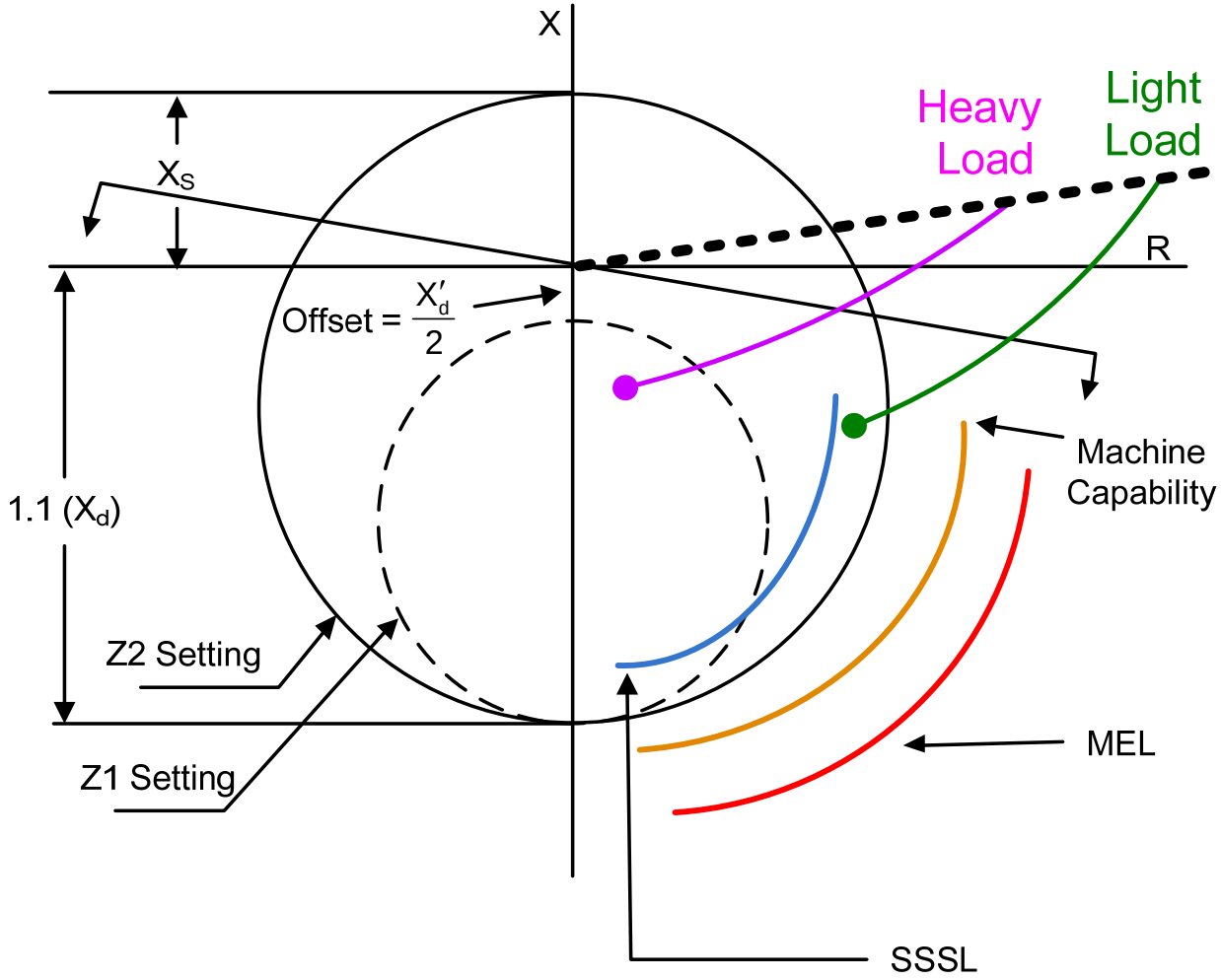

Generator Protection

Loss of Field Event

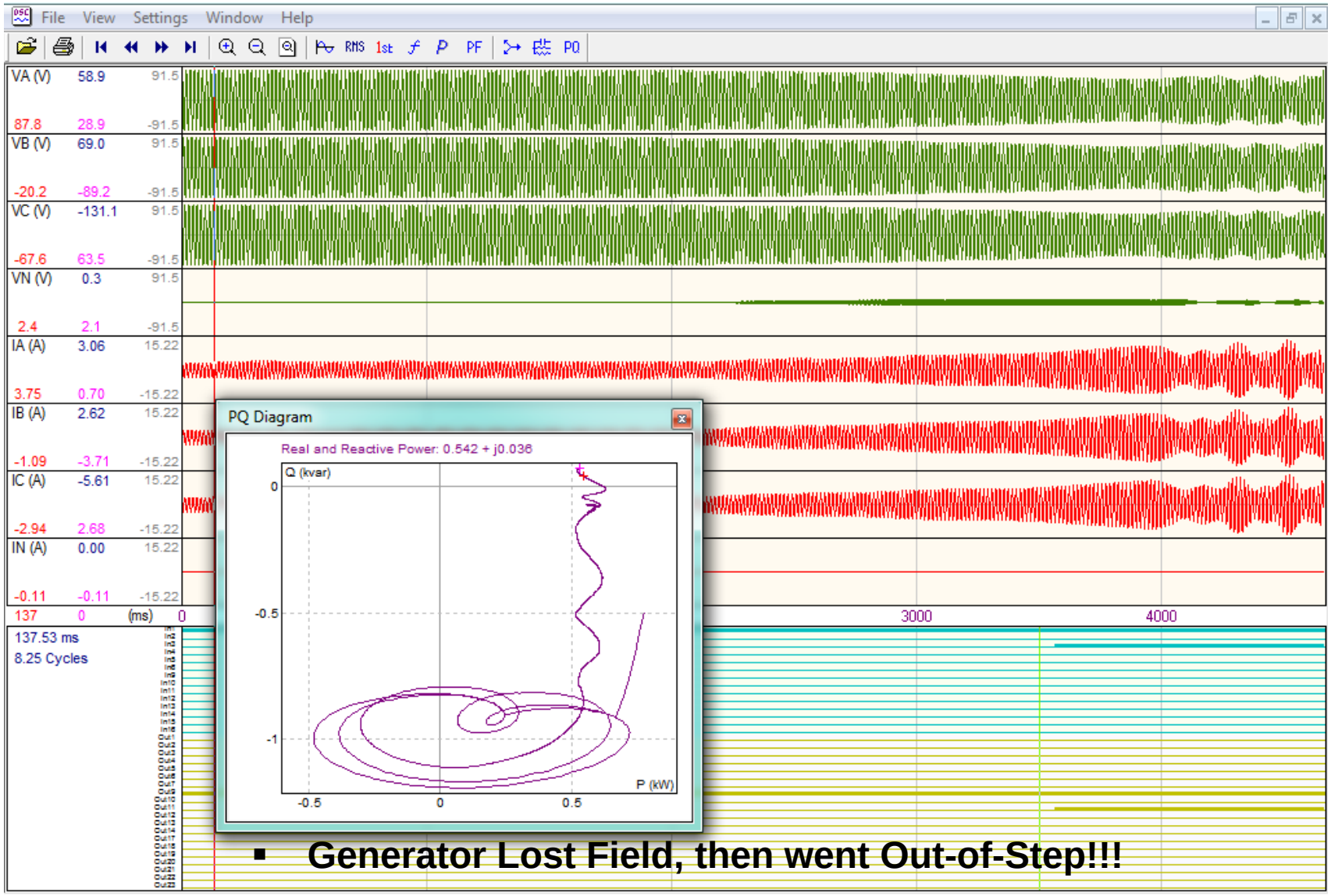

- **Generator Lost Field, then went Out-of-Step!!!**

Phase Distance (21)

- **Phase distance backup protection may be prone to tripping on stable swings and load encroachment**
  - Employ three zones
    - Z1 can be set to reach 80% of impedance of GSU for 87G back-up.
    - Z2 can be set to reach 120% of GSU for station bus backup, **or** to overreach remote bus for system fault back up protection. Load encroachment blinder provides security against high loads with long reach settings.
    - Z3 may be used in conjunction with Z2 to form out-of-step blocking logic for security on power swings **or** to overreach remote bus for system fault back up protection. Load encroachment blinder provides security against high loads with long reach settings.
  - Use minimum current supervision provides security against loss of potential (machine off line)

21: Distance Element

With Load Encroachment Blinder fro Z1, Z2, Z3

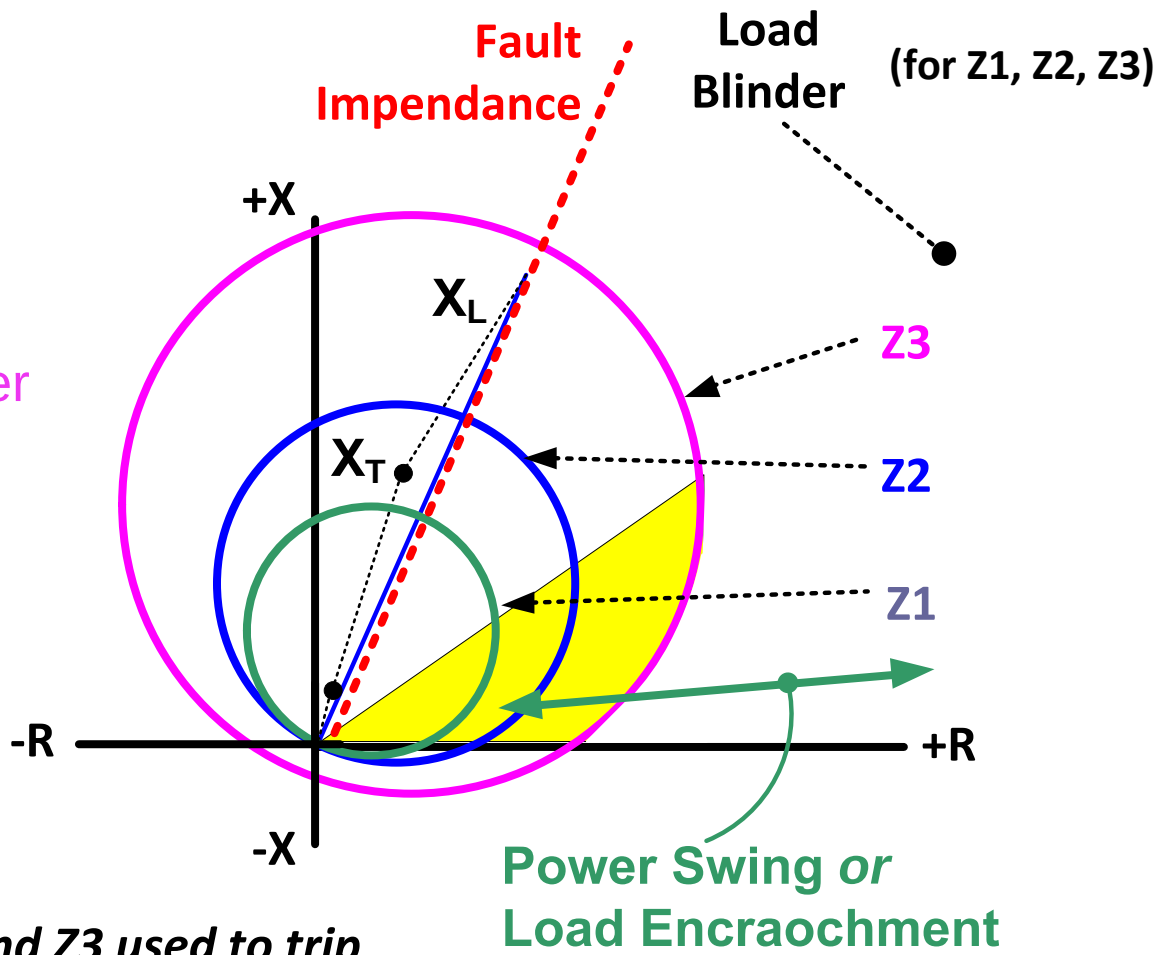

Z1, Z2 and Z3 used to trip
Z1 set to 80% of GSU, Z2 set to 120% of GSU
Z3 set to overreach remote bus

Stable Power Swing and Load Encroachment Blinding

21: Distance Element

With:

- Power Swing Blocking
- Load Encroachment Blocking for Z1 and Z2

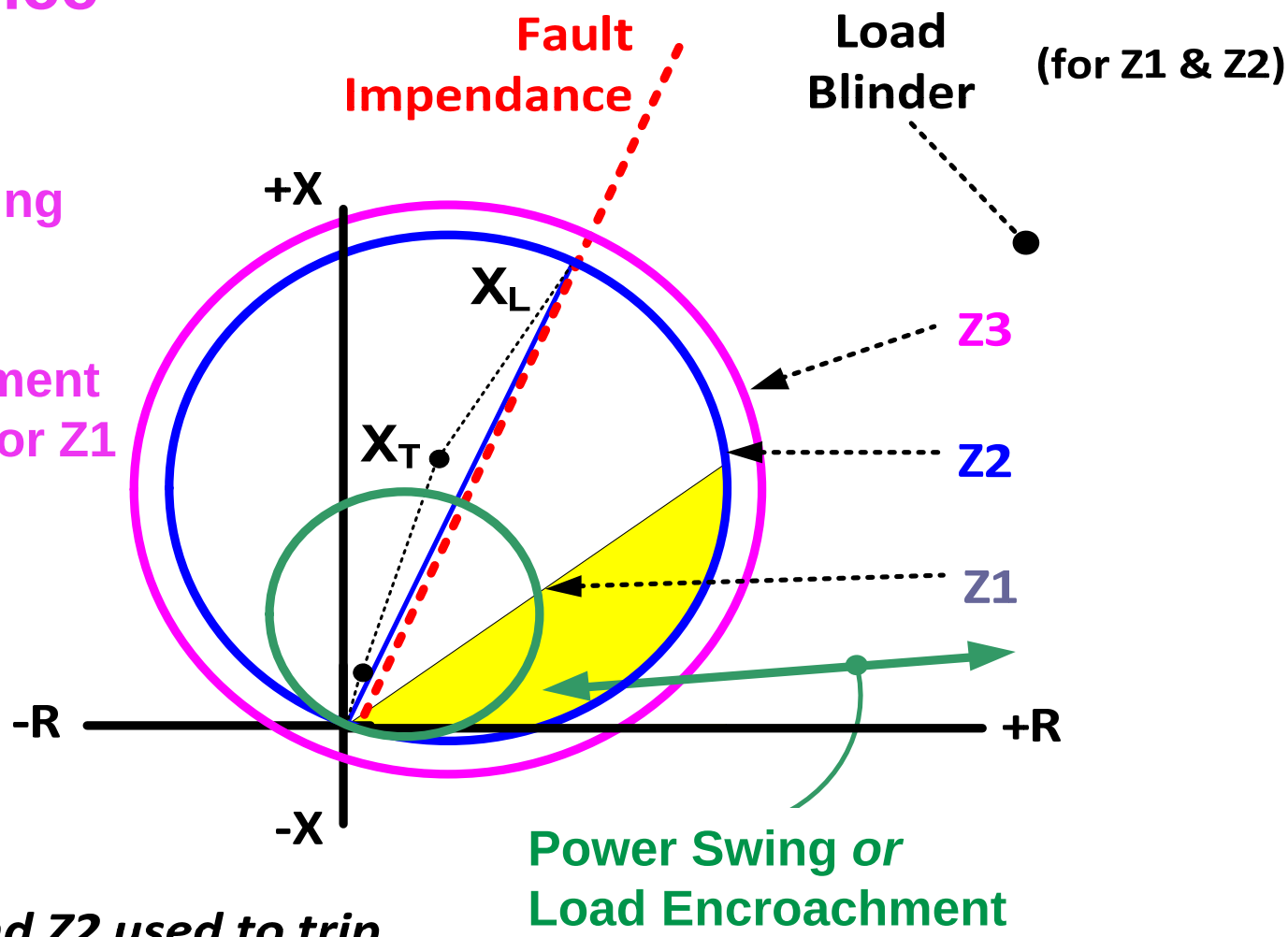

Z1 and Z2 used to trip

Z1 set to 80% of GSU, Z2 set to overreach remote bus

Z3 used for power swing blocking; Z3 blocks Z2

Generator Out-of-Step Protection (78)

- Types of Instability
  - Steady State: Steady Voltage and Impedance (Load Flow)
  - Transient: Fault, where voltage and impedance change rapidly
  - Dynamic: Oscillations from AVR damping (usually low f)
- Occurs with unbalance of load and generation
  - Short circuits that are severe and close
  - Loss of lines leaving power plant (raises impedance of loadflow path)
  - Large losses or gains of load after system break up
- Generator accelerates or decelerates, changing the voltage angle between itself and the system
- Designed to cover the situation where electrical center of power system disturbance passes through the GSU or the generator itself
- More common with modern EHV systems where system impedance has decreased compared to generator and GSU impedance

Generator Out-of-Step Protection (78)

- When a generator goes out-of-step (synchronism) with the power system, high levels of transient shaft torque are developed.
- If the pole slip frequency approaches natural shaft resonant frequency, torque produced can break the shaft
- High stator core end iron flux can overheat and short the generator stator core
- GSU subjected to high transient currents and mechanical stresses

Stability

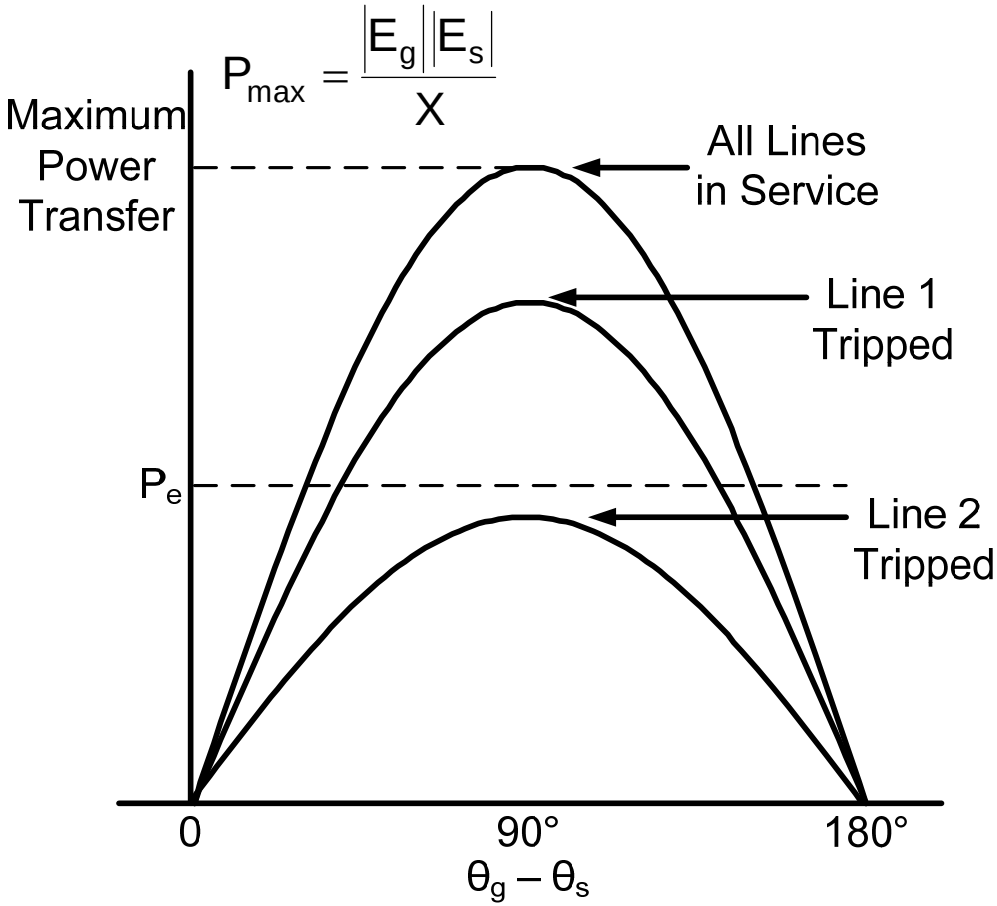

Power Transfer Equation

$$P_e = \frac{|E_g||E_s|}{X}\sin(\theta_g - \theta_s)$$

E_s - System Voltage
E_g - Generator Voltage
Θ_s - System Voltage Phase Angle
Θ_g - Generator Voltage Phase Angle
P_e - Electrical Power

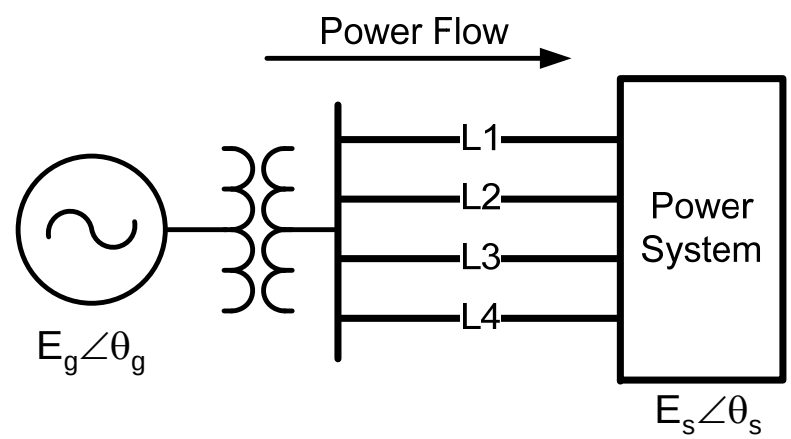

For maximum power transfer:

- Voltage of GEN and SYSTEM should be nominal – Faults lower voltage
- Impedance of lines should be low – lines out raise impedance

Out of Step: Generator and System Issue

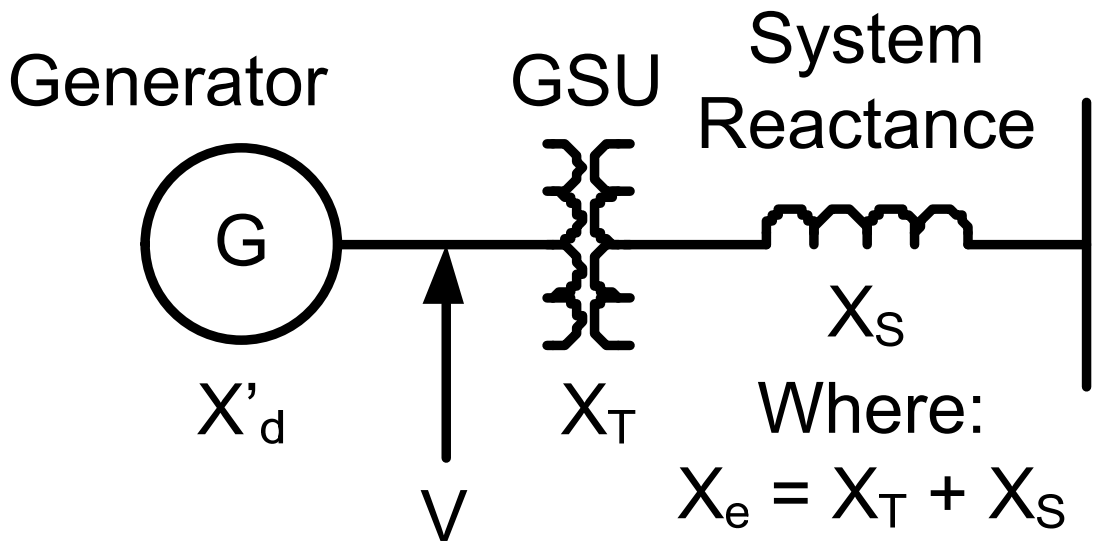

Power Transfer Equation

$$P_e = \frac{|E_g||E_s|}{X}\sin(\theta_g - \theta_s)$$

Graphical Method: 78

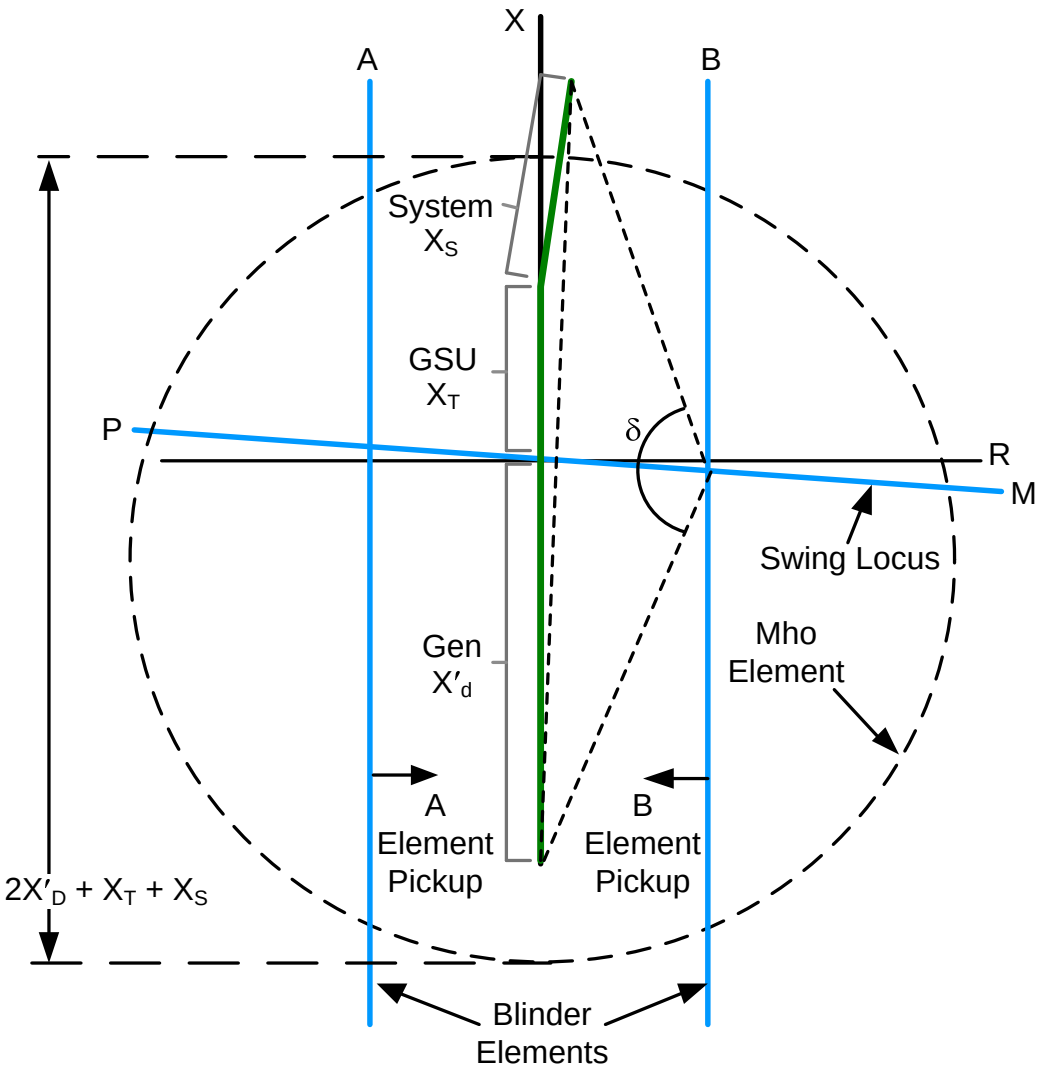

- One pair of blinders (vertical lines)
- Supervisory offset mho
- Blinders limit reach to swings near the generator

Graphical Method: 78

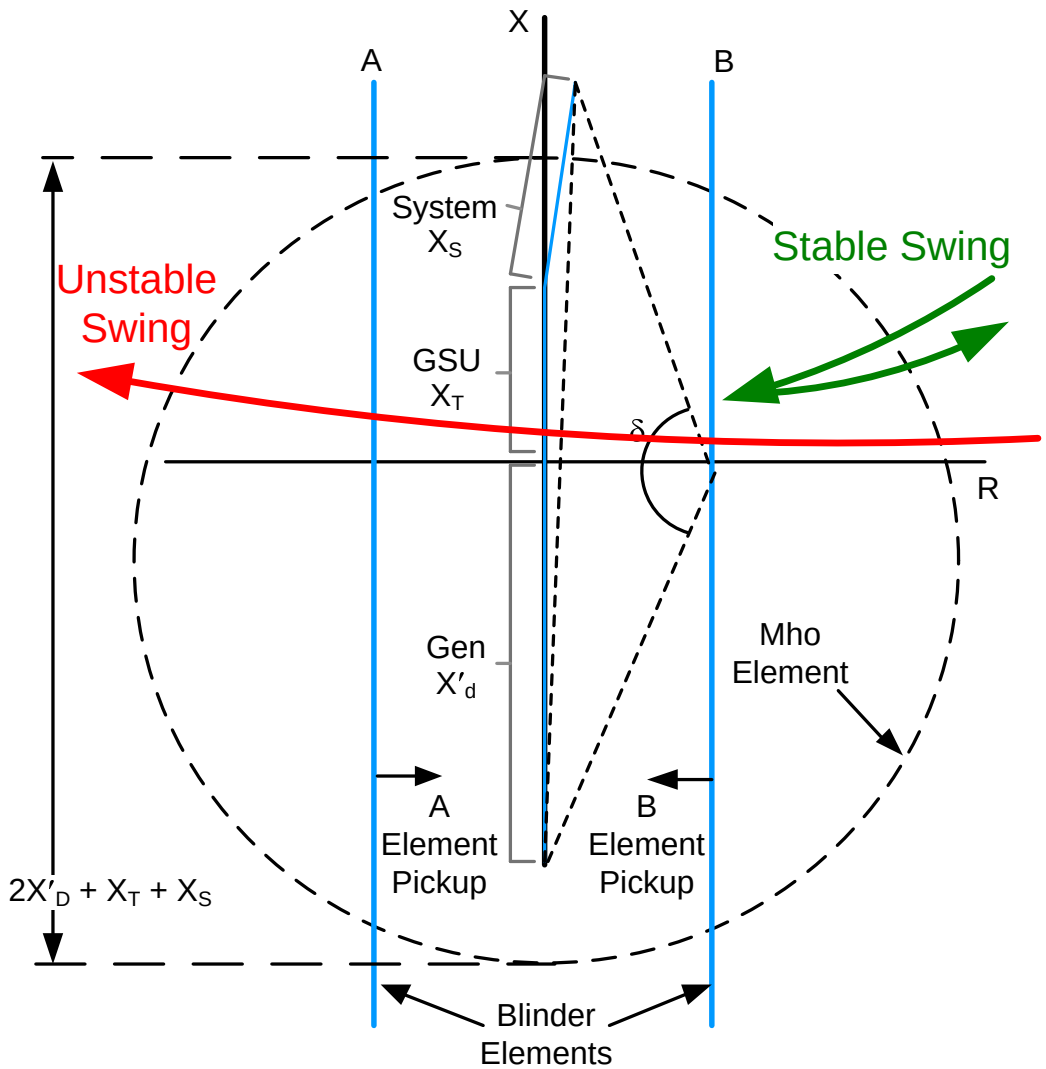

Generator Protection

Out-of-Step (Loss of Synchronism) Event

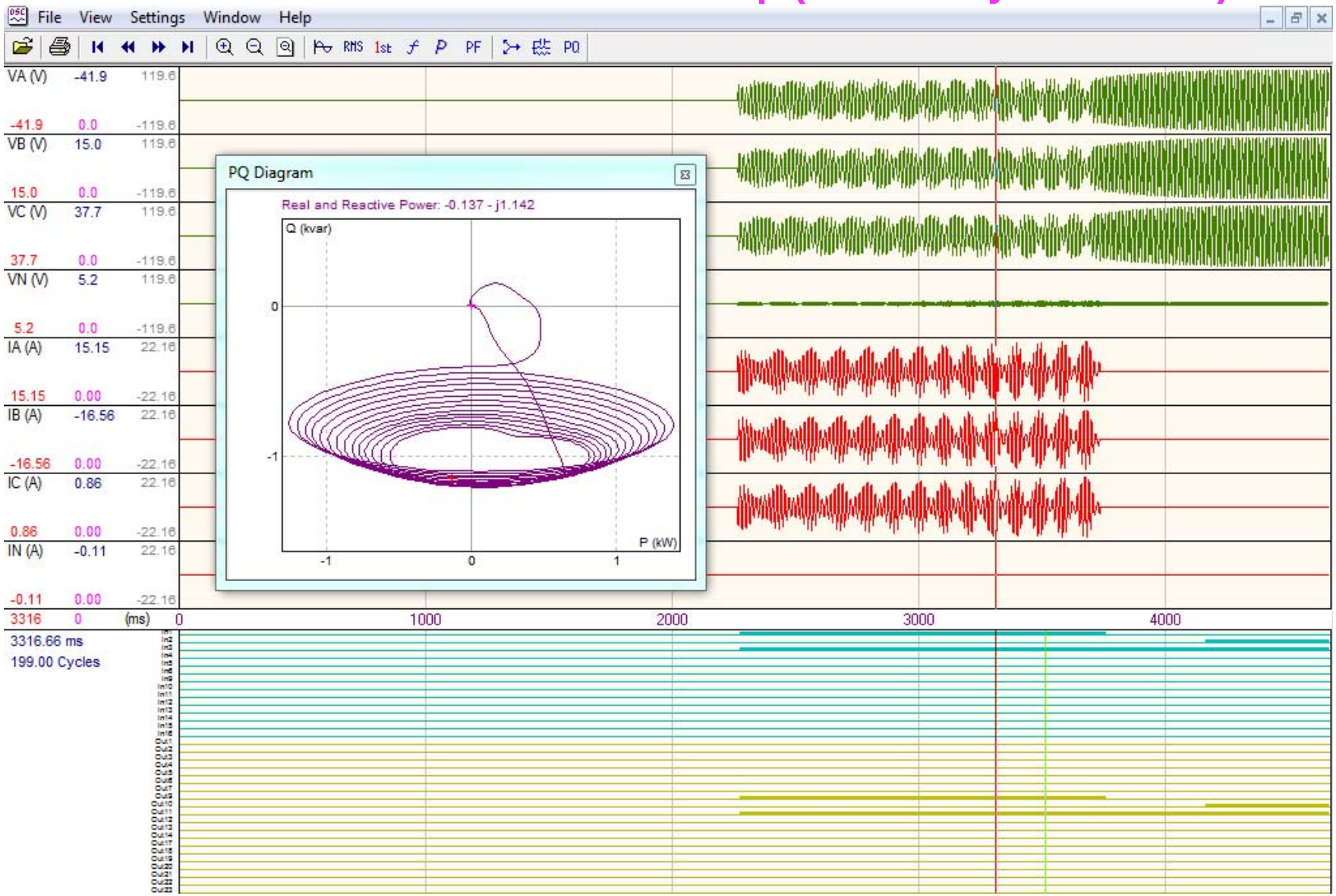

Off-Nominal Frequency Impacts

- Underfrequency may occur from system overloading
  - Loss of generation
  - Loss of tie lines importing power
- Underfrequency is an issue for the generator **81-U**
  - Ventilation is decreased
  - Flux density (V/Hz) increases
- Underfrequency limit is typically dictated by the generator and turbine
  - Generator: V/Hz and loading
  - Turbine: Vibration Issues

- Overfrequency may occur from load rejection
- Overfrequency is typically not an issue with the generator
  - Ventilation is improved **81-O**
  - Flux density (V/Hz) decreases
- Overfrequency limit is typically dictated by the turbine (vibration)

System Frequency Overview

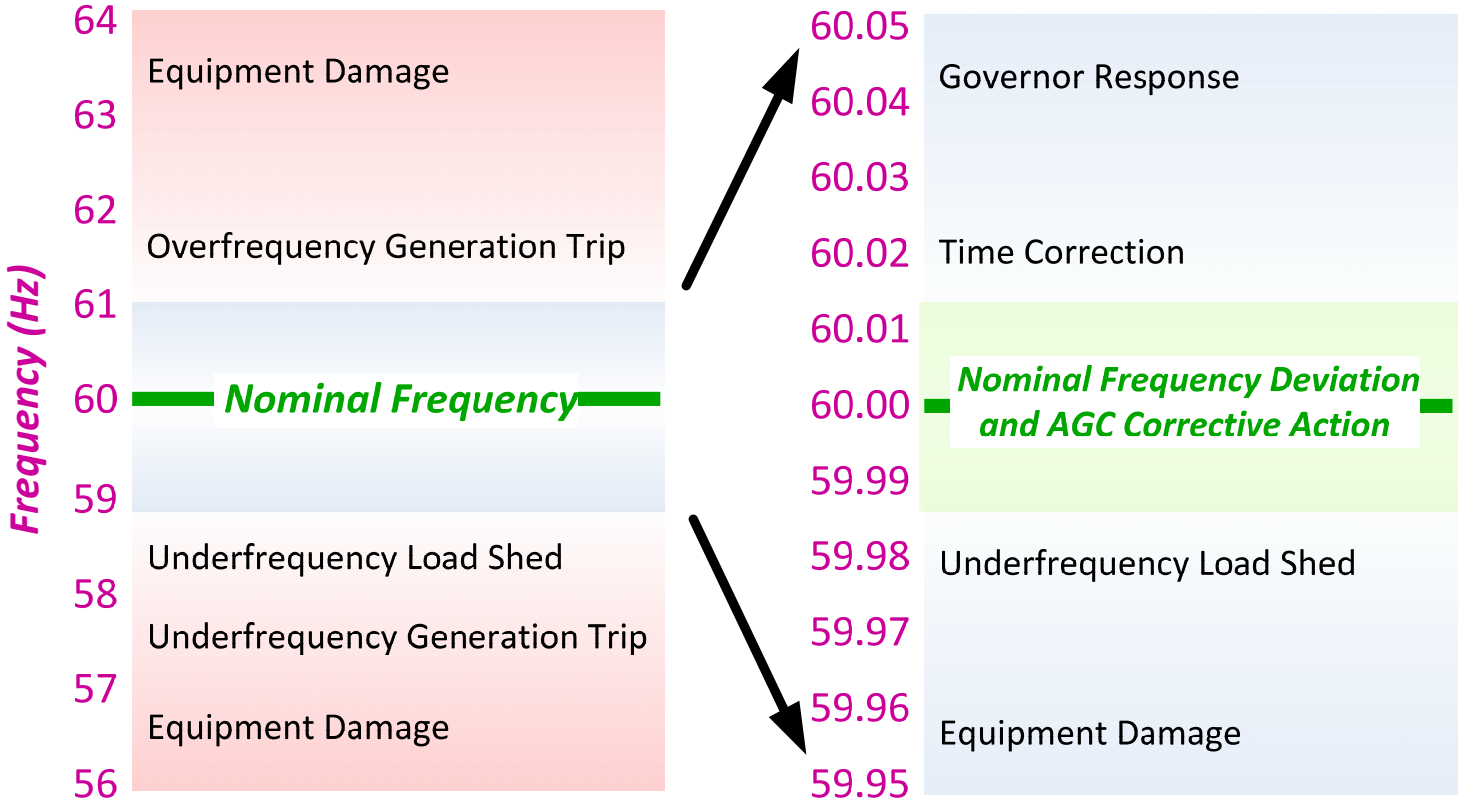

- For overfrequency events, the generator prime mover power is reduced to bring generation equal to load
- For underfrequency events, load shedding is implemented to bring load equal to generation
  - It is imperative that underfrequency tripping for a generator be coordinated with system underfrequency load shedding

Abnormal Operating Conditions

- **81 – Four Step Frequency**
  - Any step may be applied over- or underfrequency
  - High accuracy – 1/100th Hz (0.01 Hz)
  - Coordination with System Load Shedding

- **81A – Underfrequency Accumulator**
  - Time Accumulation in Six Underfrequency Bands
  - Limits Total Damage over Life of Machine
    - Typically used to Alarm

- **81R – Rate of Change of Frequency**
  - Allows tripping on rapid frequency swing

Steam Turbine Underfrequency Operating Limitations

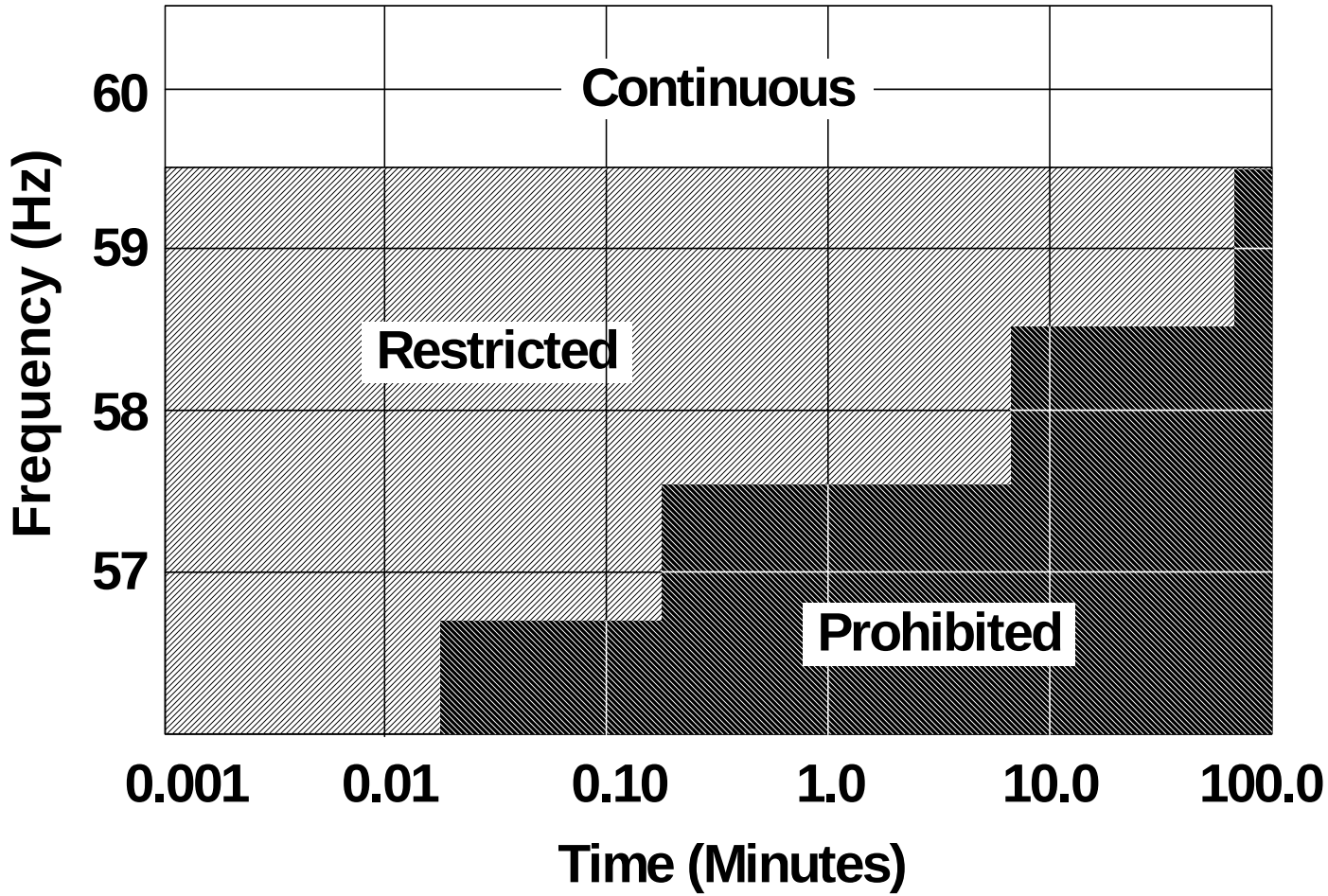

Typical, from C37.106

Turbine Over/Underfrequency

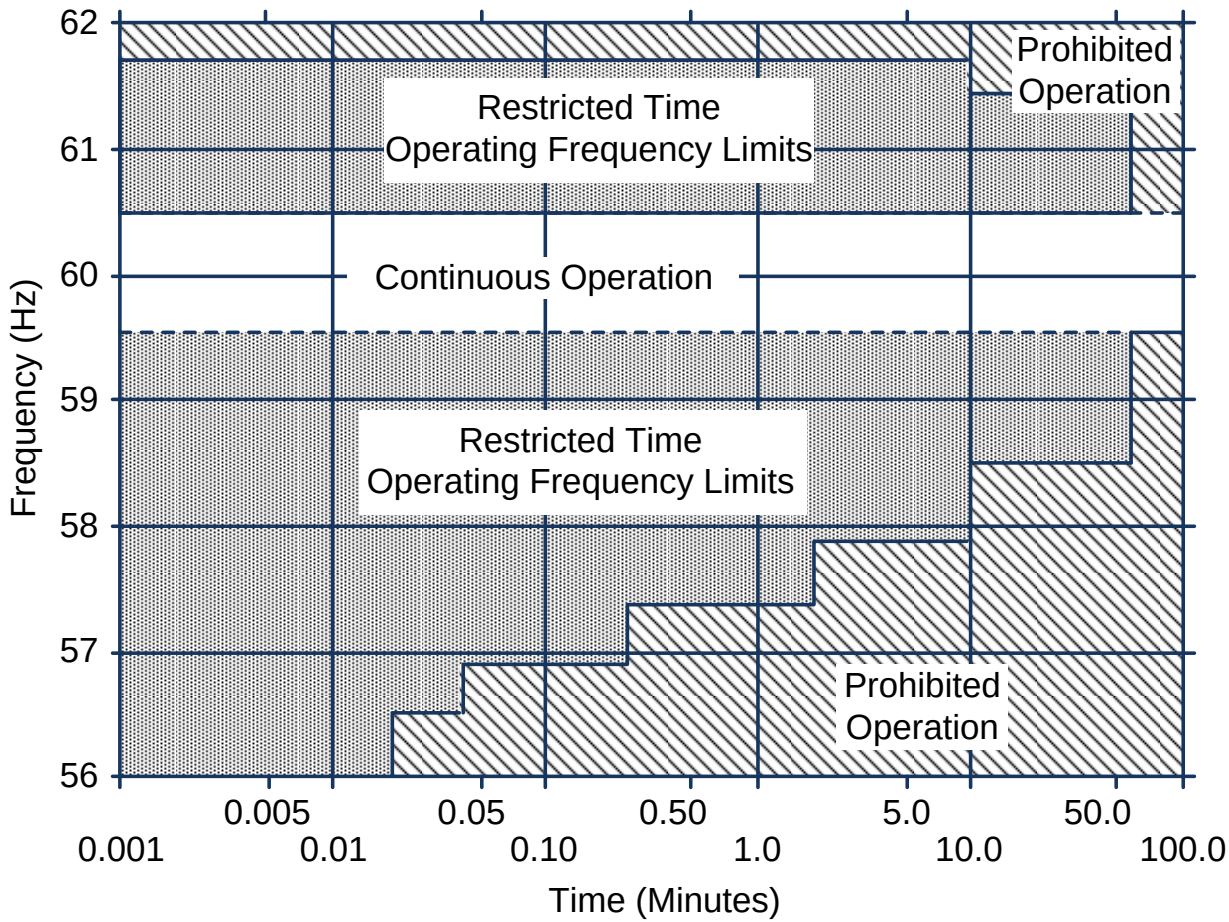

Typical, from C37.106

81A – Underfrequency Accumulator

- Turbine blades are designed and tuned to operate at rated frequencies
- Operating at frequencies different than rated can result in blade resonance and fatigue damage

  - In 60 Hz machines, the typical operating frequency range:
    - 18 to 25 inch blades = 58.5 to 61.5 Hz
    - 25 to 44 inch blades = 59.5 and 60.5 Hz
  - Accumulated operation, for the life of the machine, not more than:
    - 10 minutes for frequencies between 56 and 58.5 Hz
    - 60 minutes for frequencies between 58.5 and 59.5 Hz

Causes of Inadvertent Energizing

- Operating errors
- Breaker head flashovers
- Control circuit malfunctions
- Combination of above

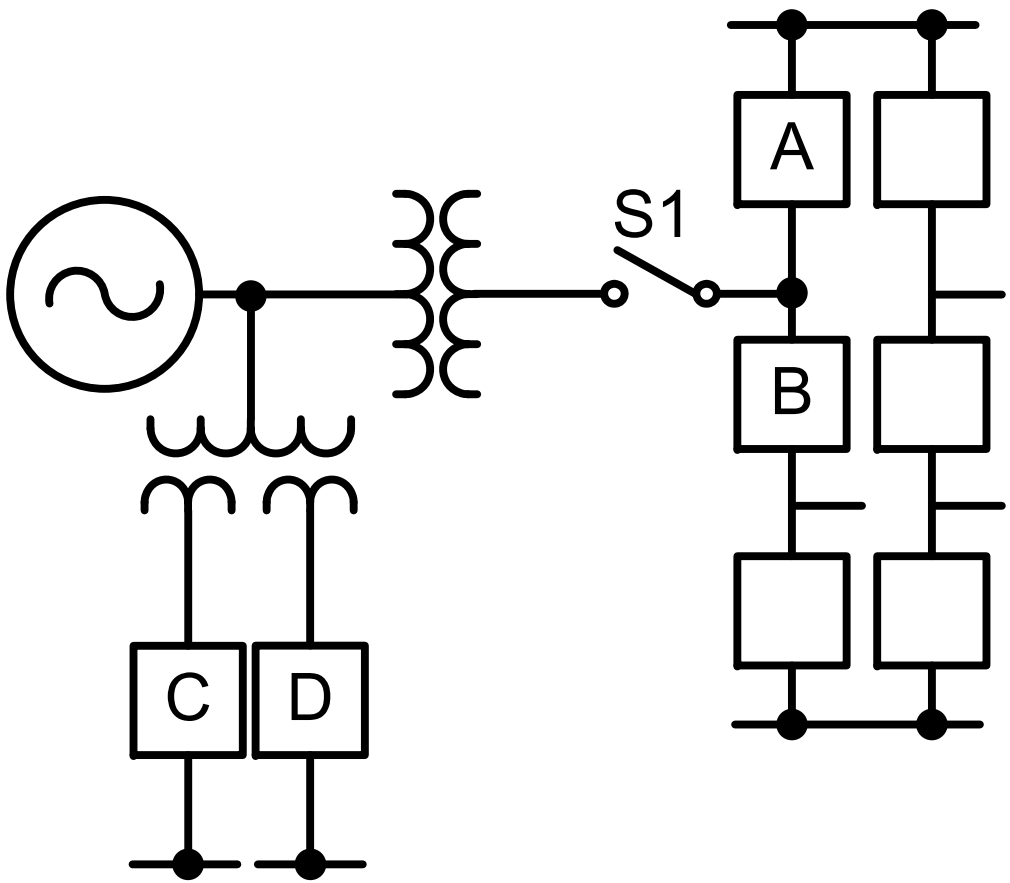

Inadvertent Energizing: Protection Response

- Typically, normal generator relaying is not adequate to detect inadvertent energizing
  - Too slow or not sensitive enough
    - Distance
    - Negative sequence
    - Reverse power
    - Some types are complicated and may have reliability issues
      - Ex., Distance relays in switchyard disabled for testing and inadvertent energizing event takes place

Inadvertent Energizing

- When inadvertently energized from 3-phase source, the machine acts like an induction motor
  - Rotor heats rapidly (very high I_2 in the rotor)
- Current drawn
  - Strong system: 3-4x rated
  - Weak system: 1-2x rated
  - From Auxiliary System: 0.1-0.2x rated

- When inadvertently energized from 1-phase source (pole flashover), the machine does not accelerate
  - No rotating flux is developed
  - Rotor heats rapidly (very high I_2 in the rotor)

- Protection system must be able to detect and clear both 3-phase and 1-phase inadvertent energizing events

Inadvertent Energizing

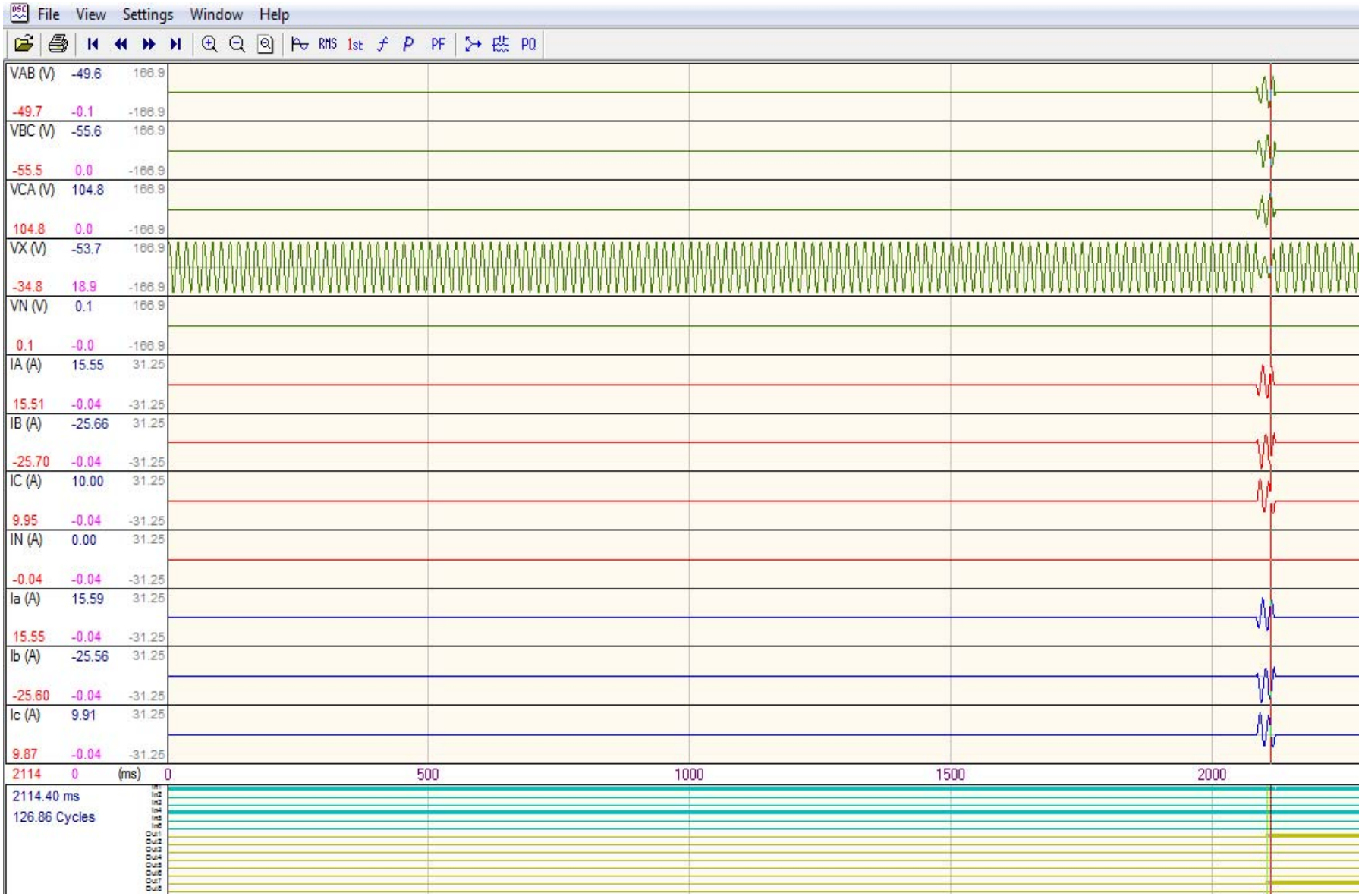

Inadvertent Energizing Scheme

- Undervoltage (27) supervises low-set, instant overcurrent (50) – recommended 27 setting is 50% or lower of normal voltage
- Pickup timer ensures generator is dead for fixed time to ride through three-phase system faults
- Dropout timer ensures that overcurrent element gets a chance to trip just after synchronizing

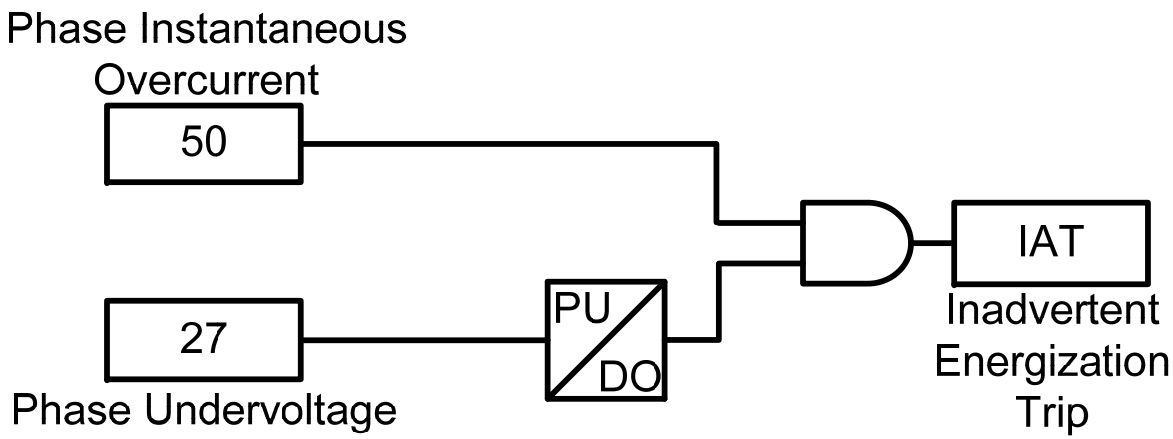

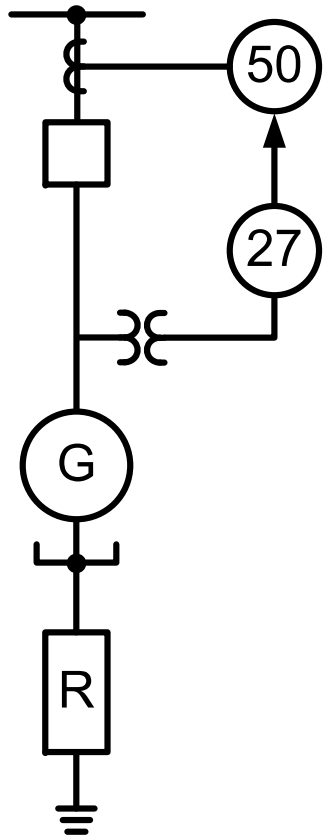

Breaker Failure Timeline

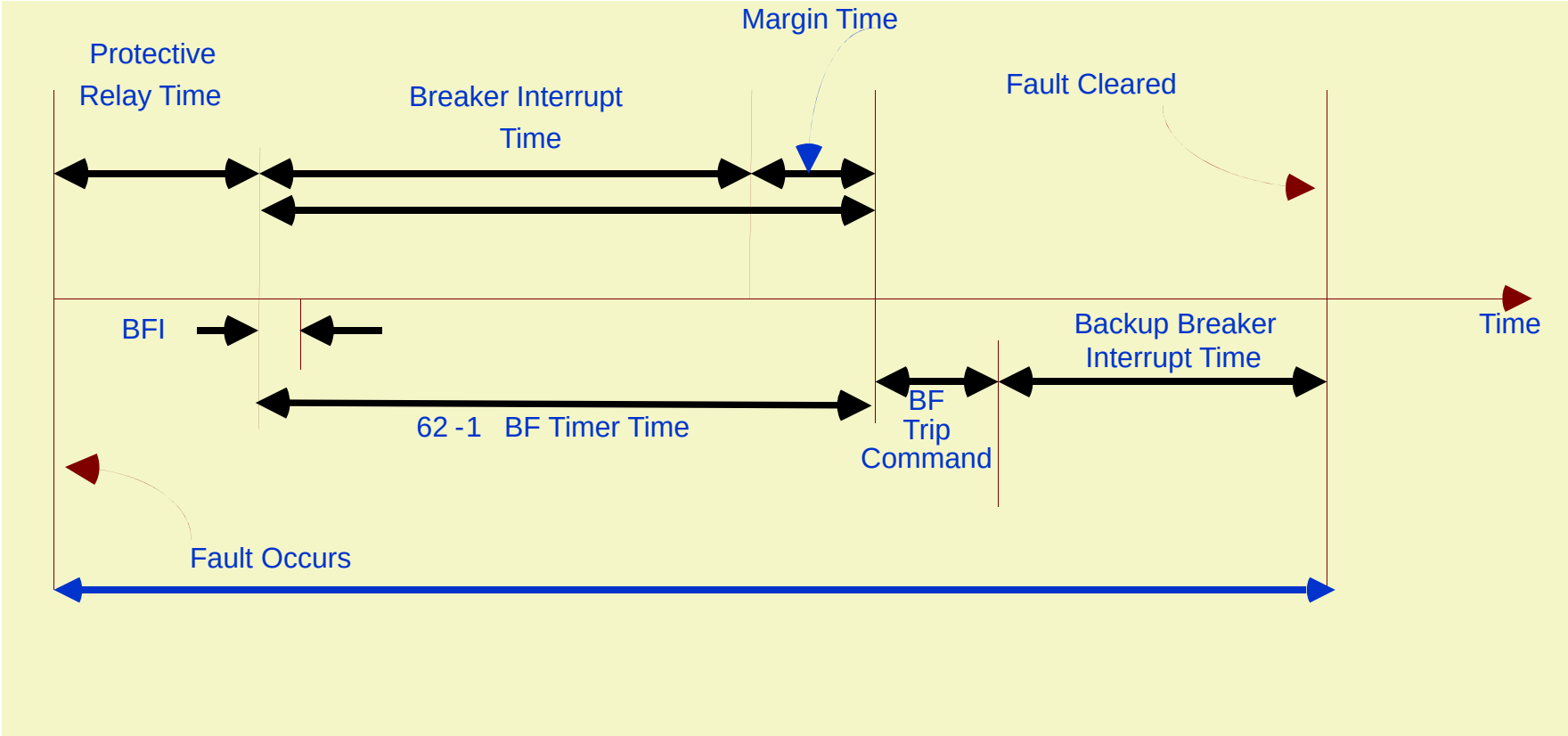

Breaker Pole Flashover & Stuck Pole

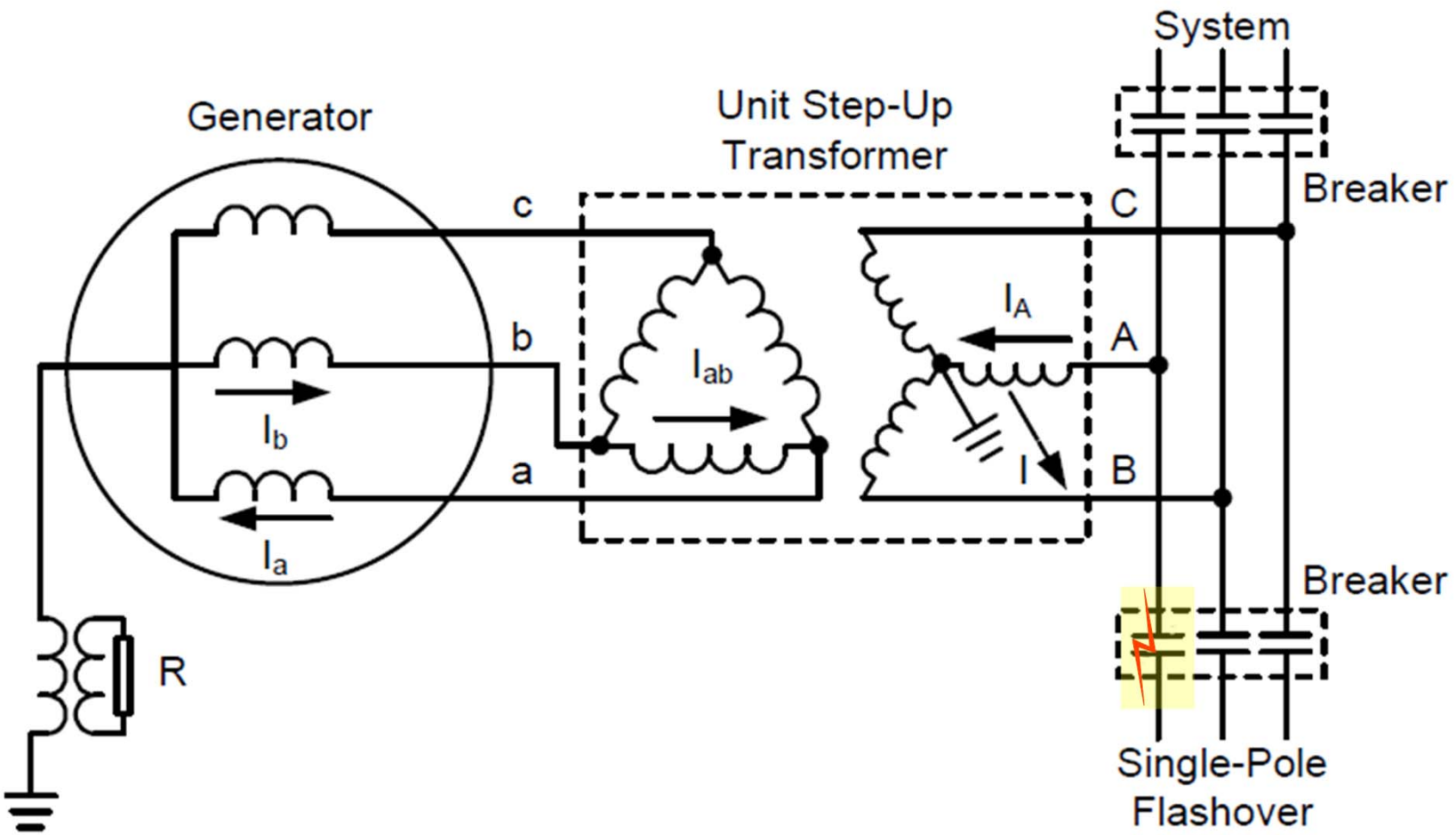

Generator Breaker Failure and Pole Flashover Scheme: Simplified Conceptual View

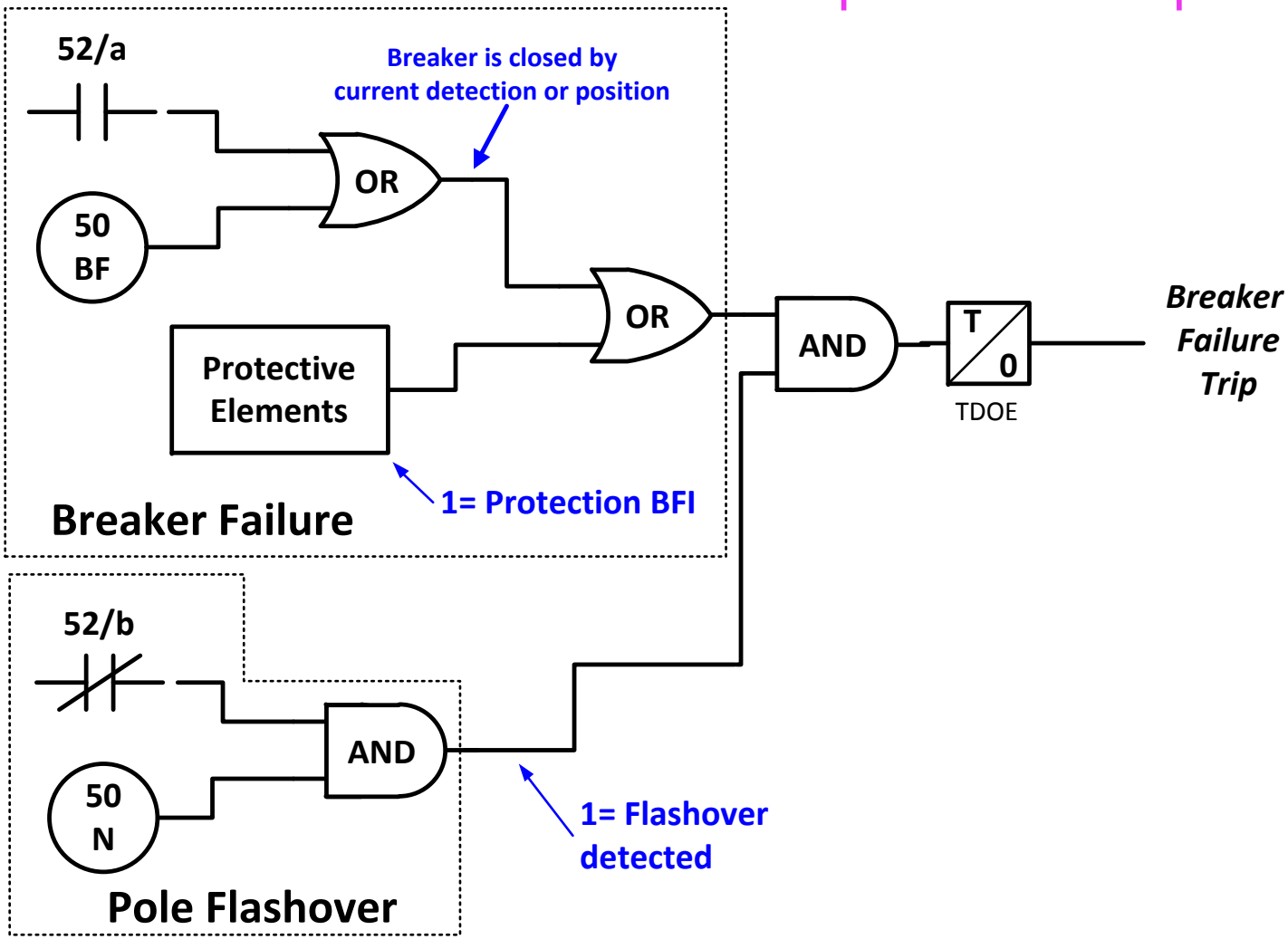

Anti-Motoring: 32

- Used to protect generator from motoring during loss of prime mover power
- Motoring:
  - Wastes power from the system
  - May cause heating in steam turbines as ventilation is greatly reduced
  - Steam and dewatered hydro can motor with very little power; <=1% rated
  - CGT and Recip typically use 10-25% of rated power to motor
- Generators are often taken off the system by backing off the power until importing slightly so not to trip with power export and go into overspeed (turbine issue)
  - This is known as sequential tripping
- Two 32 elements may be applied:
  - Sequential trip (self reset, no lockout)
  - Abnormal trip (lockout)
  - Need great sensitivity, down to .002pu
  - Usually applied as 32R, may be applied as 32F-U

Generator Tripping and Shutdown

- Generators may be shutdown for unplanned and planned reasons
  - Shutdowns may be whole or partial
  - Shutdowns may lock out (86- LOR) or be self resetting (94)
  - <u>Unplanned</u>
    - Faults
    - Abnormal operating conditions
  - <u>Scheduled</u>
    - Planned shutdown

Generator Tripping

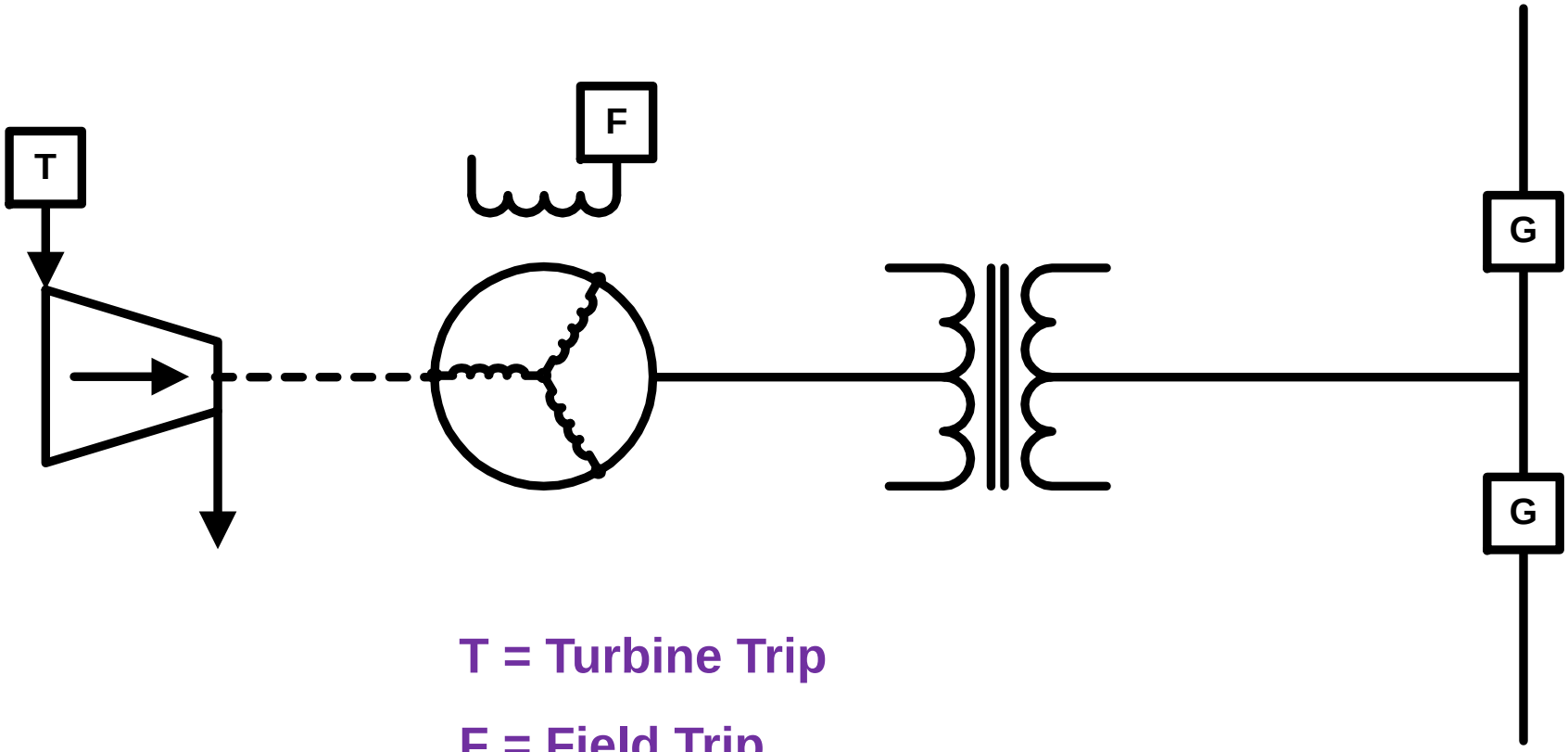

T = Turbine Trip

F = Field Trip

G = Generator Breaker Trip

Tripping Philosophy & Sequential Tripping

– Unit separation

- Used when machine is to be isolated from system, but machine is left operating so it can be synced back to the system after separating event is cleared (system issue)
- Only generator breaker(s) are tripped

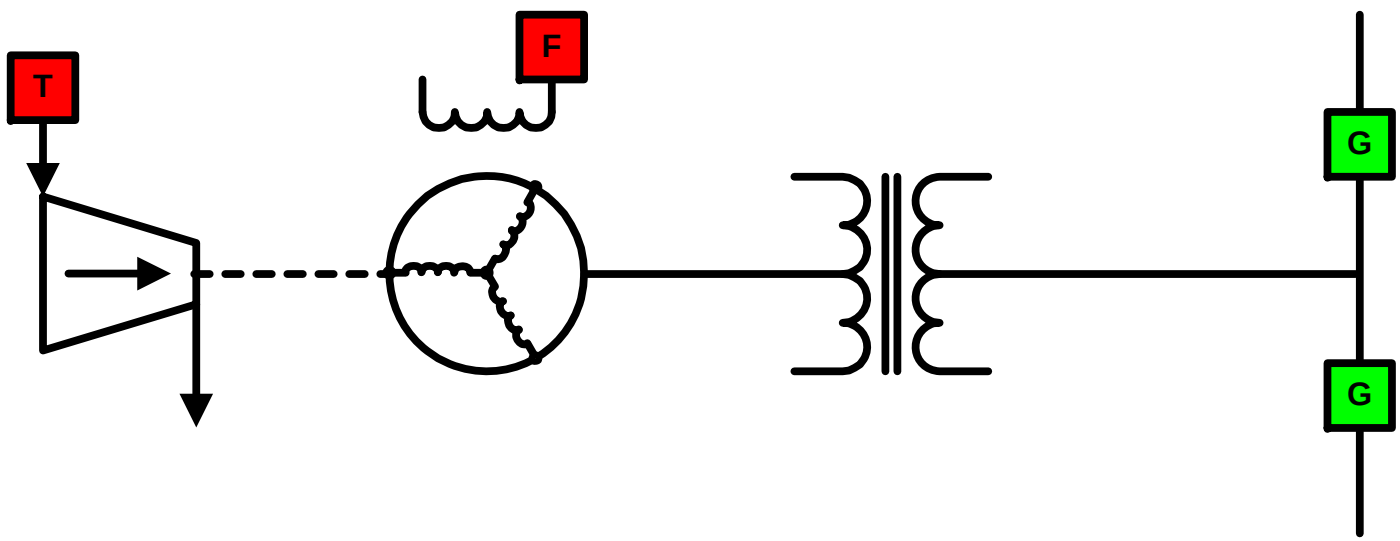

Tripping Philosophy & Sequential Tripping

– Generator Trip
- Used when machine is isolated and overexcitation trip occurs
- Exciter breaker is tripped (LOR) with generator breakers already opened

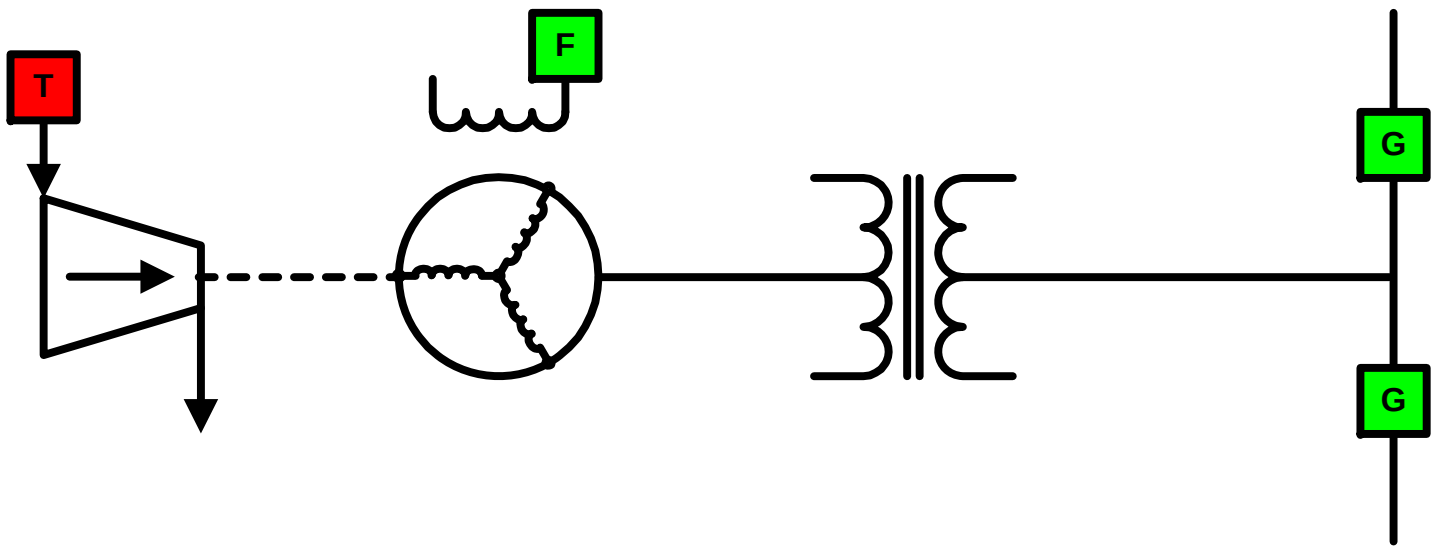

Tripping Philosophy & Sequential Tripping

– Simultaneous Trip (Complete Shutdown)

- Used when internal (in-zone) protection asserts
- Generator and exciter breakers are tripped (LOR)
- Prime mover shutdown initiated (LOR)
- Auxiliary transfer (if used) is initiated

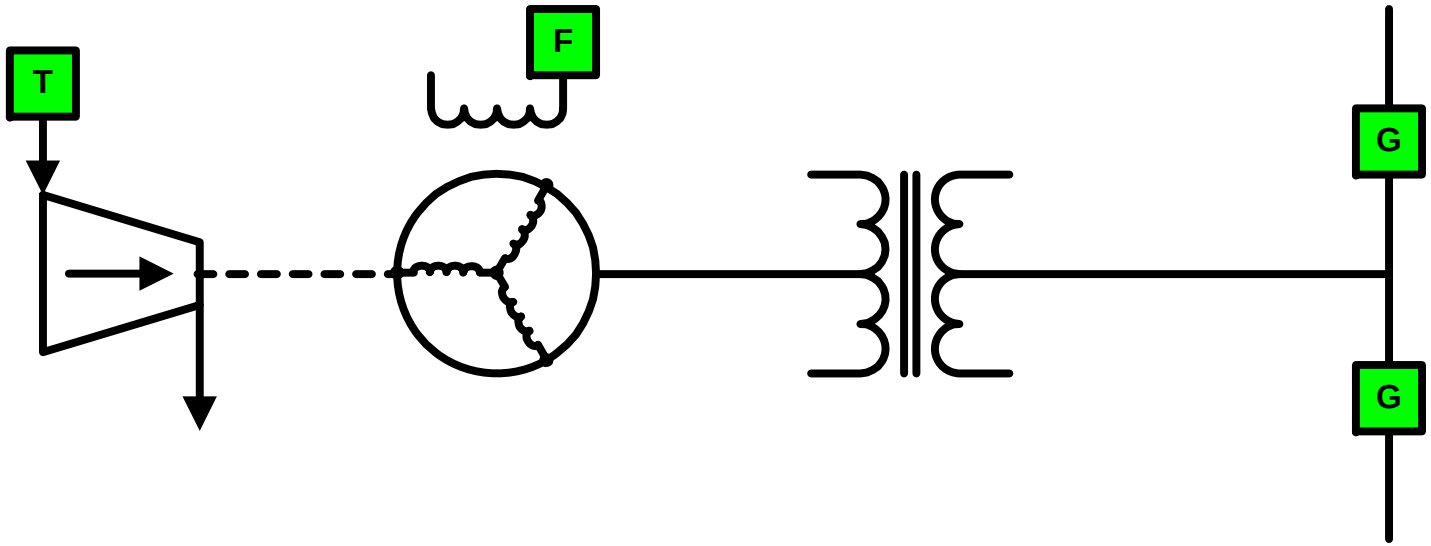

Tripping Philosophy & Sequential Tripping

- Sequential Trip
  - Used for taking machine off-line (unfaulted)
    - Generator and exciter breakers are tripped (94)
    - Prime mover shutdown initiated (94)
    - Auxiliary transfer (if used) is initiated

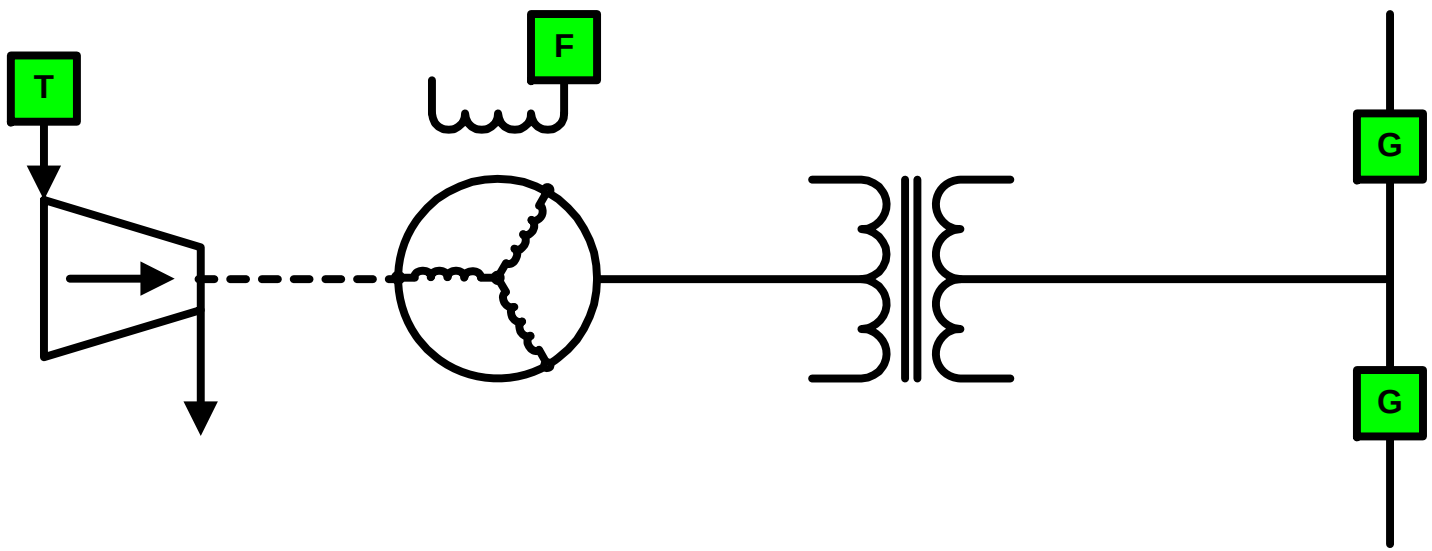

Sequential Tripping

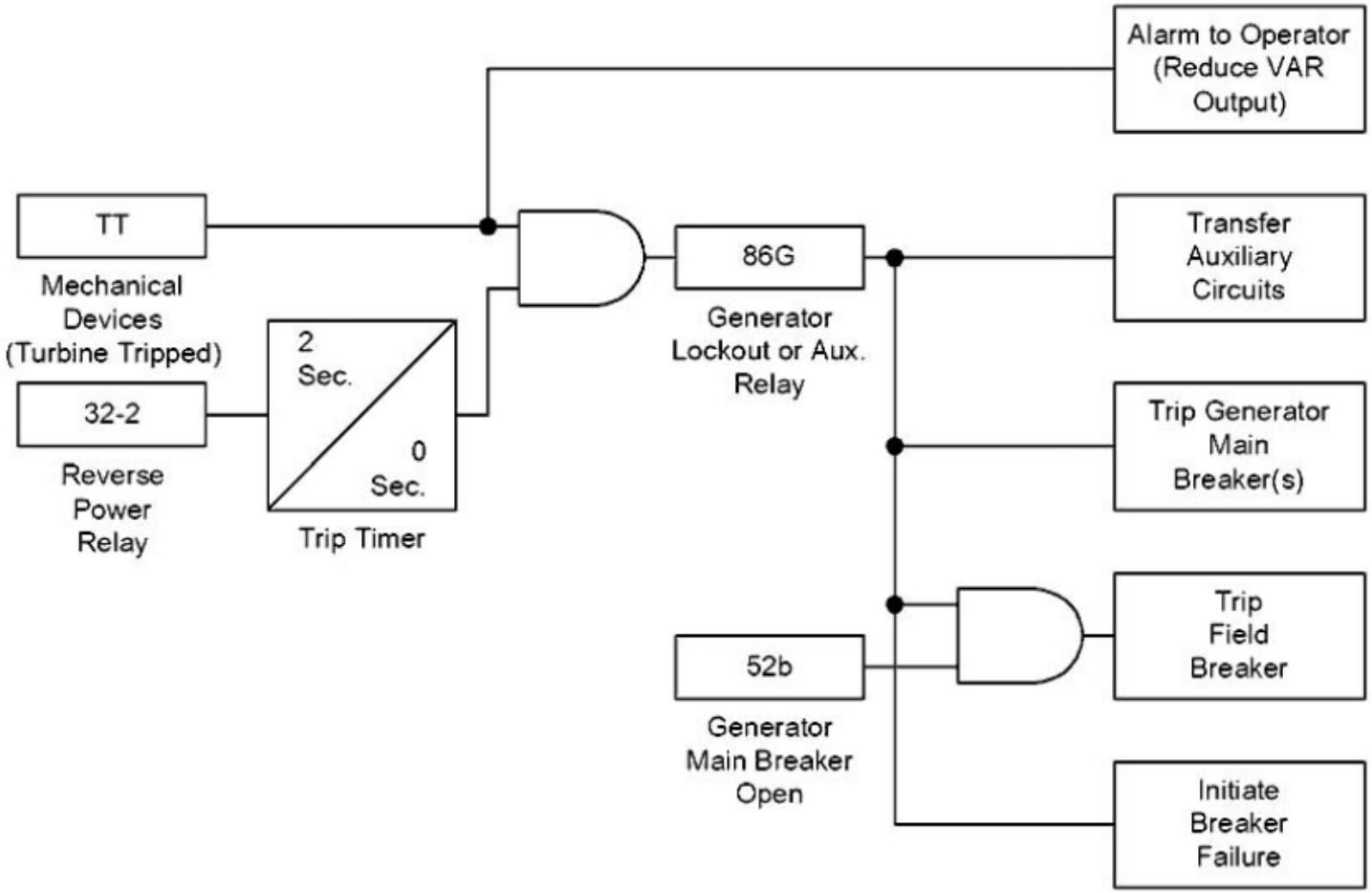

Tripping Philosophy & Sequential Tripping

- Back down turbine and excitation
  - Backing down excitation to allows easier better measurement of power
- Initiate Sequential Trip
  - Use 32 element that trips G, F and T, but does not do this through a LOR
  - When a small amount of reverse power is detected, trip G, F and T

Generator Protection

Trip Logic

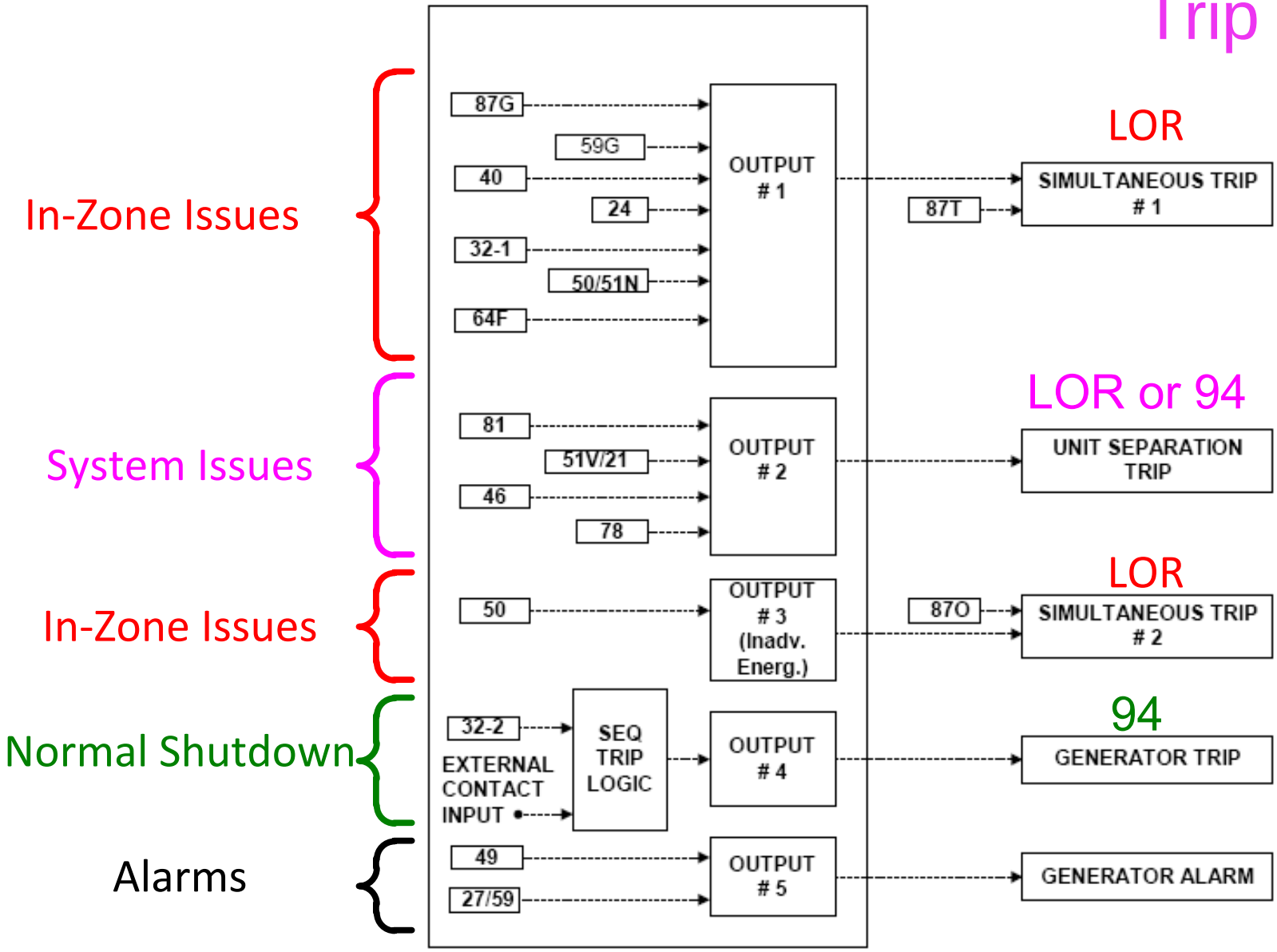

Typical Protection Functions for a Large or Important Generator

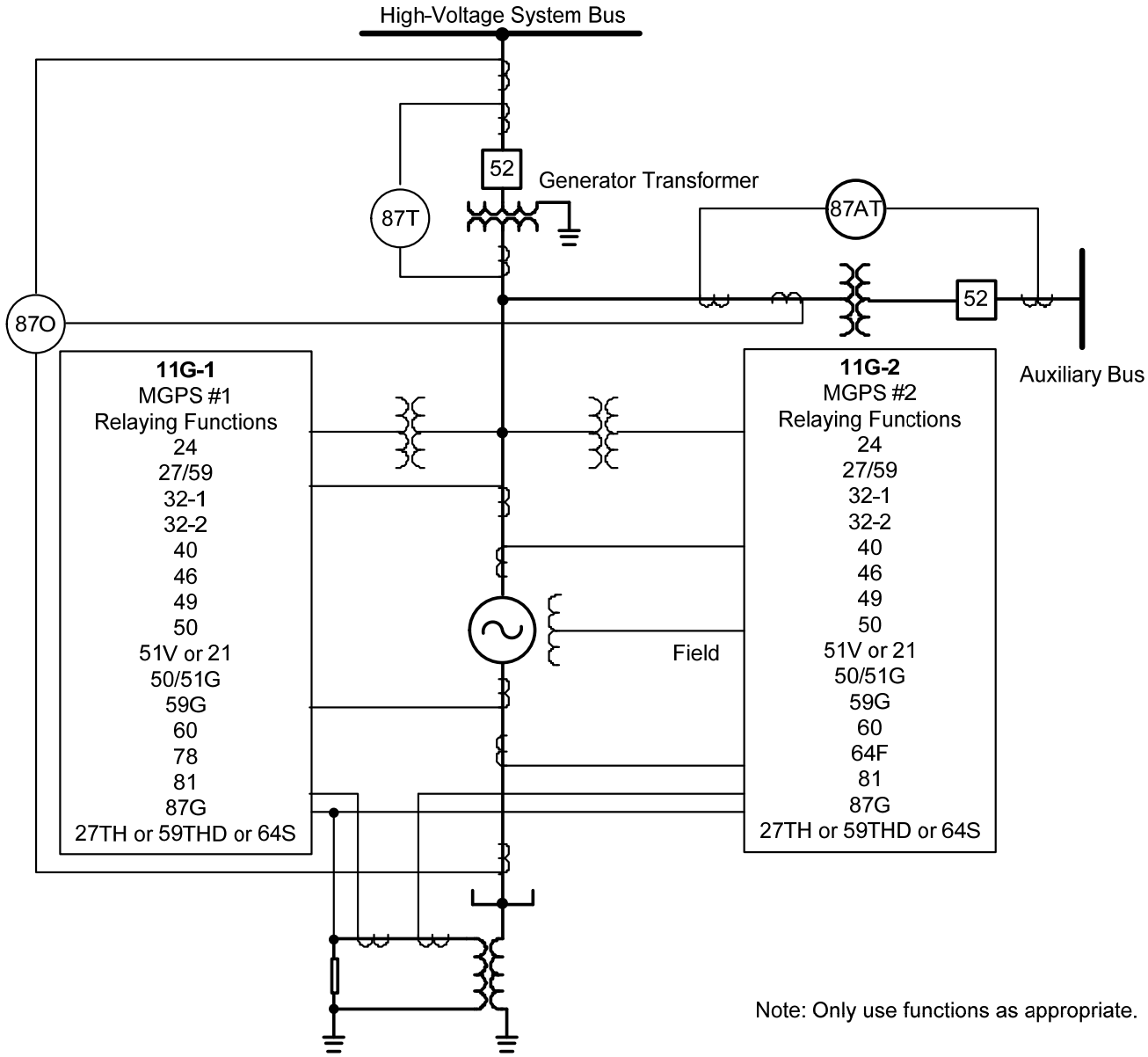

Note: Only use functions as appropriate.

Mitigating Reliability Concerns

- Integrating many protection functions into one package raises reliability concerns
- Address these concerns by…
  1. Providing two MGPRs, each with a portion or all of the protection functions (redundancy for some or all)
  2. Providing backup for critical components, particularly the power supply
  3. Using MGPR self-checking ability

Aug 2003, NE Blackout: Generator Trips

531 Generators at 261 Power Plants tripped!!!

- IEEE PSRC Survey
  - Conducted in early ’90s, exposed many areas of protection lacking
  - Reluctance to upgrade:
    - Lack of expertise
    - To recognize problems
    - To engineer the work
    - The thought that “Generators don’t fault”
    - Operating procedures can prevent protection issues

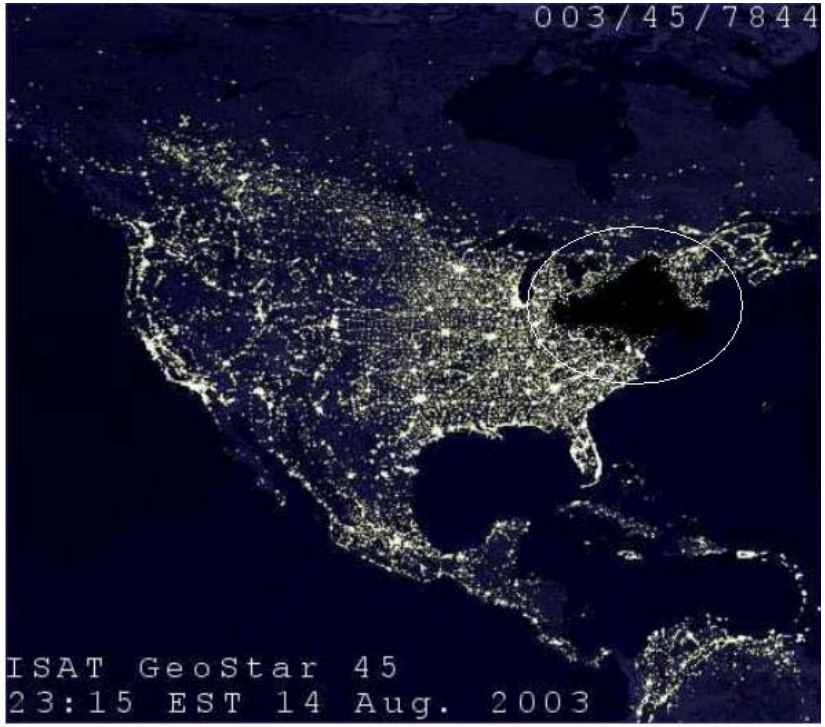

Why Upgrade?

- Existing generator and transformer protection may:
  - Require frequent and expensive maintenance
  - Cause coordination issues with plant control (excitation, turbine control)
  - Trip on through-faults (external faults), stable power swings, load encroachment and energizing
  - Not follow NERC PRC Standards (PRC = protection and control)
  - Exhibit insensitivity to certain abnormal operating conditions and fault types
  - Not be self-diagnostic
  - Lack comprehensive monitoring and communications capabilities
    - Not provide valuable event information that can lead to rapid restoration
    - Part of NERC Report comments on the August 03 Blackout
  - Not be in compliance with latest ANSI/IEEE Standards!
    - Asset Reliability, Insurance, Liability Issues
    - C37-102: Guide for the Protection of Synchronous Generators

Protection Upgrade Opportunities

- **Improved sensitivity**
  - Loss of Field
  - 100% stator ground fault
  - Reverse power
  - Negative sequence
  - Overexcitation
- **Improved Security**
  - Directionally supervised ground differential protection
  - Distance Element Enhancements
    - Load encroachment blinding
    - Power swing blocking (for stable swings)

Protection Upgrade Opportunities

- **New protections**
  - Inadvertent energizing
  - VT fuse loss (integrated)
- **Special applications**
  - Generator breaker failure
    - Pole flashover (prior to syncing)

Oscillography

- **Determine if relay and circuit breaker operated properly**
  - Identify relay, control or breaker problem
  - Generators do experience faults / abnormal conditions
    - In the machine or the system?
- **Speed generator's return to service**
  - Identify type of testing needed
  - Provide data to generator manufacturer
- **Gives plant engineer data to force unit off-line for inspection**
- **Uncovers unexpected problems**
  - Synchronizing, shutdown

Long Records Let You See the Issue

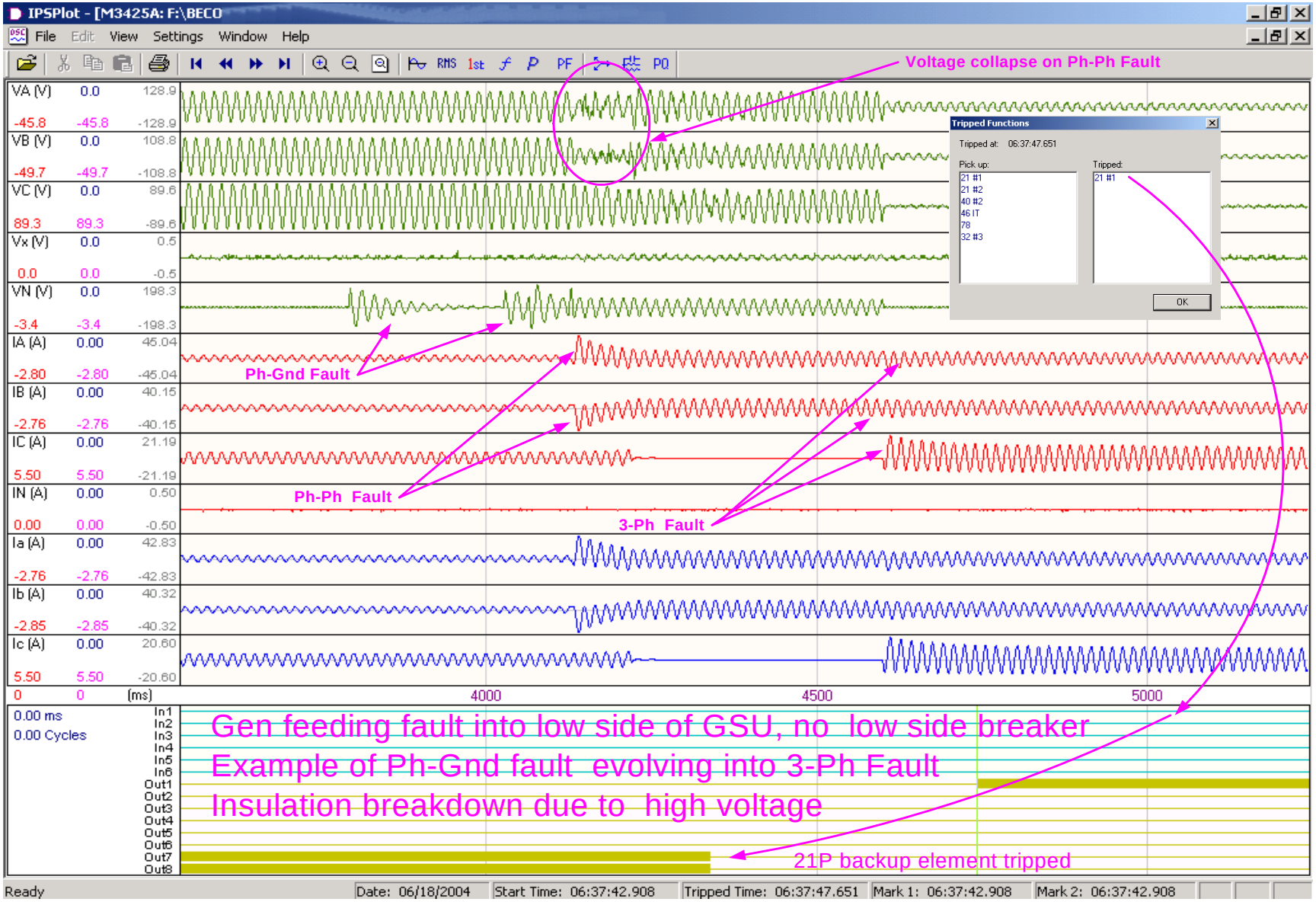

Summary

- Generators require special protection for faults and abnormal operations
- These protections are for in-zone and out-of zone events
- Modern element design matter for security and dependability
- Complexity can be made simple with the correct user tools

References

1. *IEEE Guide for Generator Ground Protection*, ANSI/IEEE C37.101-2006.
2. *IEEE Guide for AC Generator Protection*, ANSI/IEEE C37.102-2006.
3. *IEEE Tutorial on the Protection of Synchronous Generators*, Second Edition, 2010; Special Publication of the IEEE Power System Relaying Committee.
4. *IEEE Recommended Practice for Grounding of Industrial and Commercial Power Systems*, IEEE Std. 142-1991.
5. *Protection Considerations for Combustion Gas Turbine Static Starting*; Working Group J-2 of the Rotating Machinery Subcommittee, Power System Relay Committee.
6. *Protective Relaying for Power Generation Systems*; Donald Reimert, CRC Press 2006; ISBN#0-8247-0700-1.
7. *Practical Improvement to Stator Ground Fault Protection Using Negative Sequence Current*; Russell Patterson, Ahmed Eltom; IEEE Transactions Paper presented at the Power and Energy Society General Meeting (PES), 2013 IEEE.
8. *Behavior Analysis of the Stator Ground Fault (64G) Protection Scheme*; Ramón Sandoval, Fernando Morales, Eduardo Reyes, Sergio Meléndez and Jorge Félix, presented to the Rotating Machinery Subcommittee of the IEEE Power System Relaying Committee, January 2013.
9. *Advanced Generator Ground Fault Protections; Wayne Hartmann, presented at the Western Protective Relay Conference, October 2015.*