Design of Four Long Bridges in Fiji Islands

Oliver de Lautour

- Sites
- Constraints
- Design
- Construction
- Conclusions

Site locations

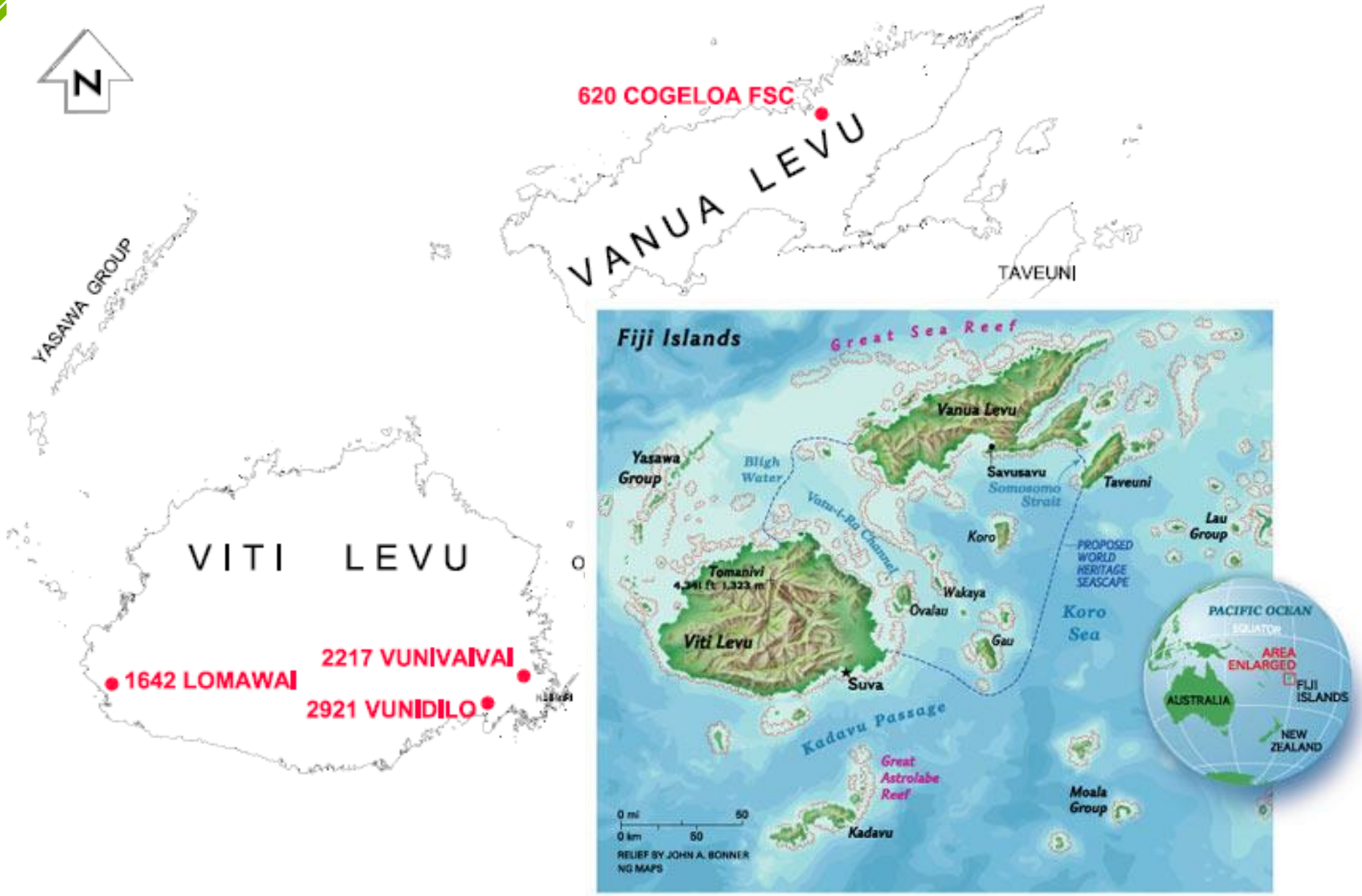

Bridge 620 - Cogeloa

Bridge 1642 - Lomawai

Bridge 2217 - Vunivaivai

Bridge 2912 - Vunidilo

Design and construction constraints

- Large flood loading
  - Bridges are subjected to yearly flood events which over top the deck. Scour and debris also impose large design loading.
- High seismic loading
  - Bridges are subjected to high seismic loading. Z values 0.23-0.28 (Auckland Z = 0.1). Sites are prone to liquefaction and lateral spreading.

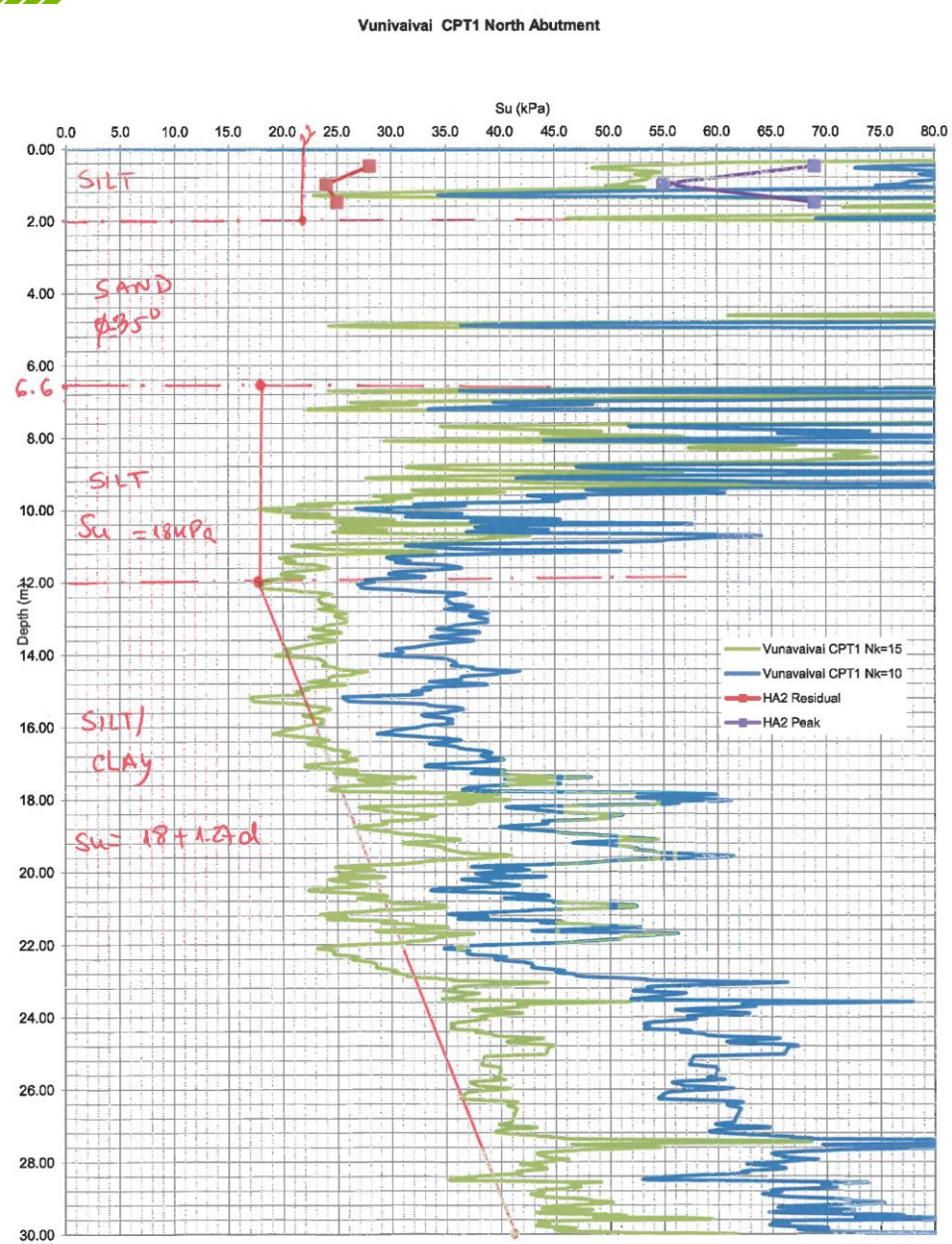

Poor founding conditions

- Deep soft soil sites at 3 of 4 bridge sites. No suitable founding layer found at Bridge 2217 to the investigation depth of 65m.
- SPT ‘N’ values of near zero

Durability

Bringing ideas to life

- 100 year design life,
- Local concrete suppliers not accustomed to high specification concrete,
- Draft amendments to cover requirements NZS3101,
- Use of supplementary cementitious materials 30% fly ash type C and corrosion inhibitors to the mix designs

Bridge	Vunidilo	Vunivaivai	Lomawai	Cogeloa
Site exposure classification	B2/C+	B2	C	B2

aurecon

Construction constraints

Bringing ideas to life

- Construction logistics
- Construction access
  - Access roads to bridges are narrow and tight in places,
  - Shipping plant & materials to Labasa
- Concrete supply (outer islands) and quality
  - Good supply in Suva, able to achieve 50MPa,
  - Elsewhere 40MPa max without the use of admixtures.
- Precast capabilities
  - Limited precast facilities for bridge beam construction, all in Suva,
  - No moulds available.
- Construction equipment
  - Limited cranes and crane capacity, 50T cranes only.
- Construction programming
  - Construction is outside of cane season (6 months) / in wet season.

aurecon

Design

Bringing ideas to life

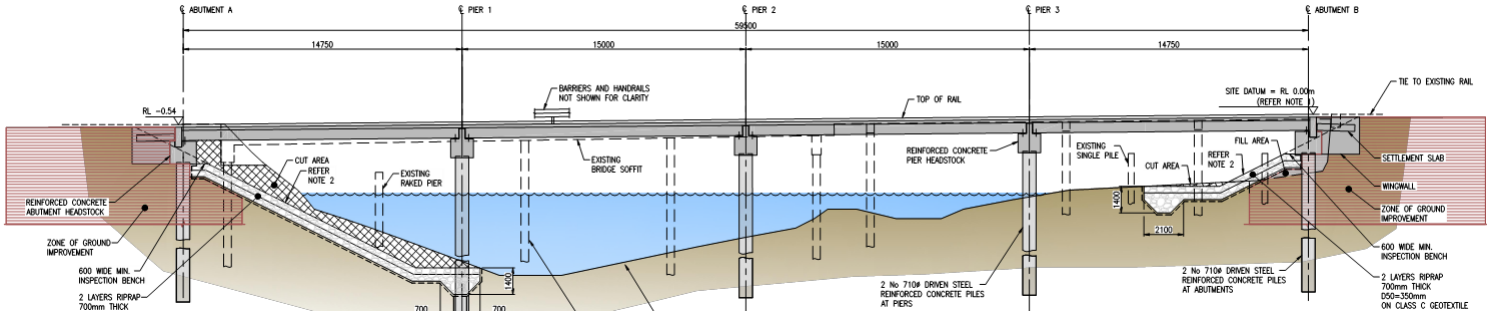

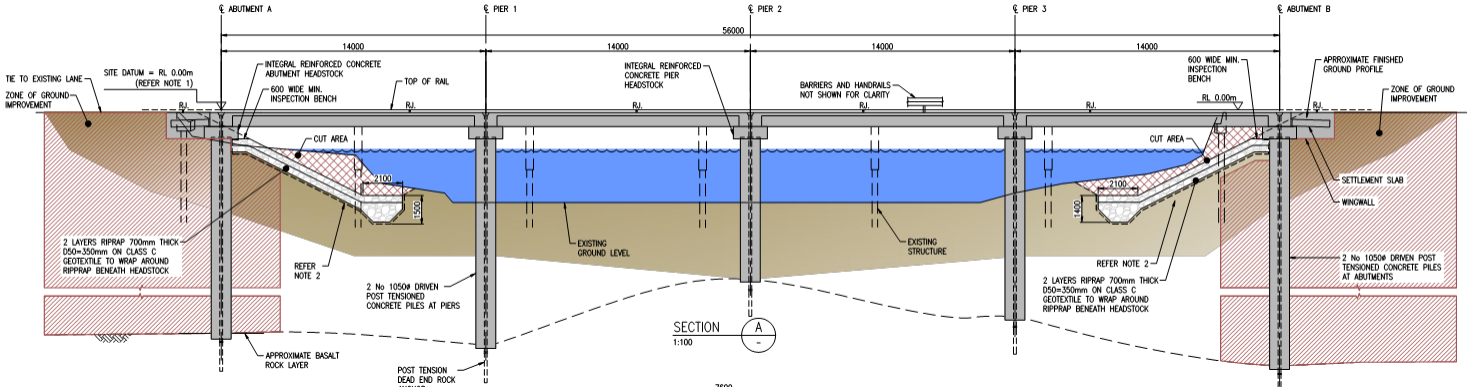

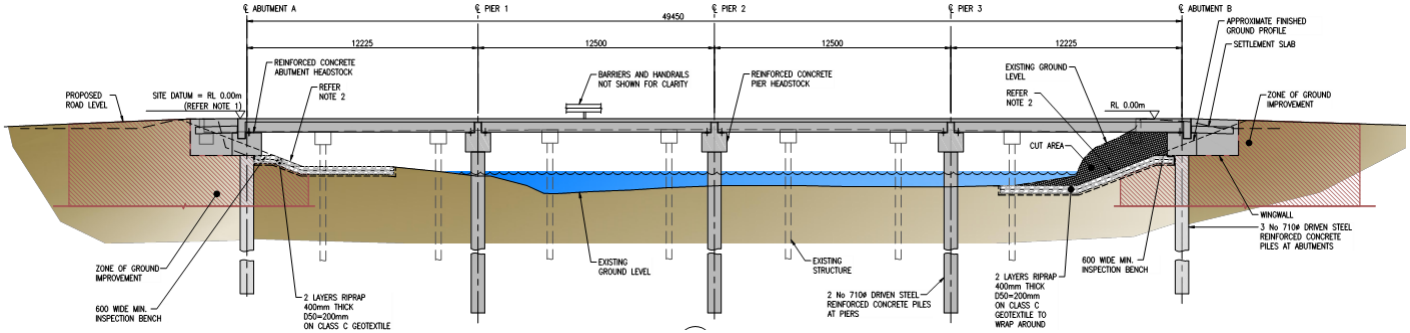

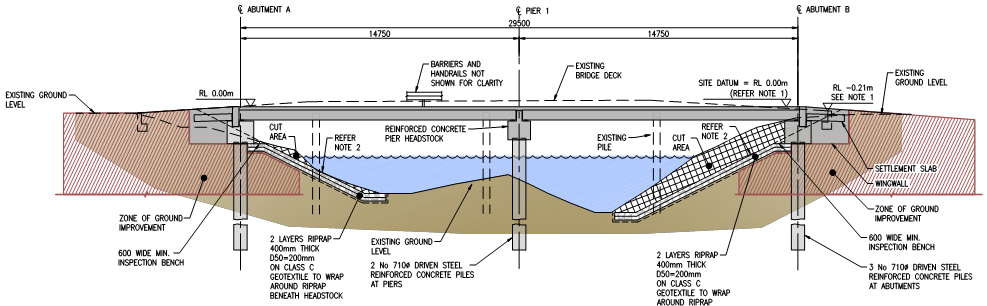

aurecon

Design

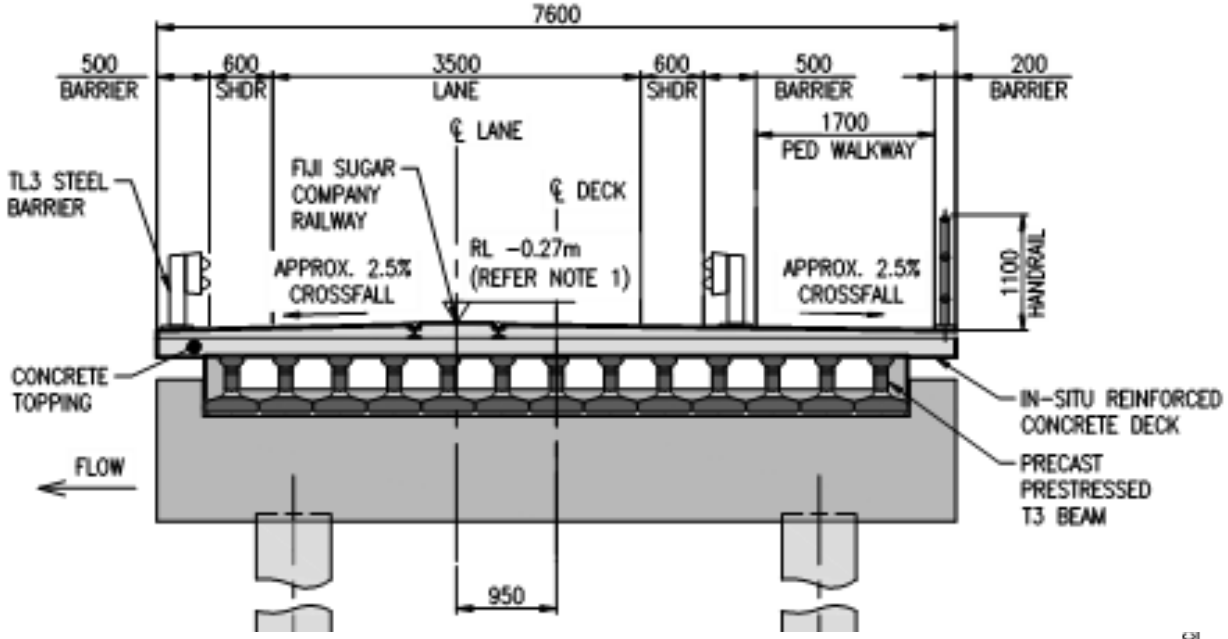

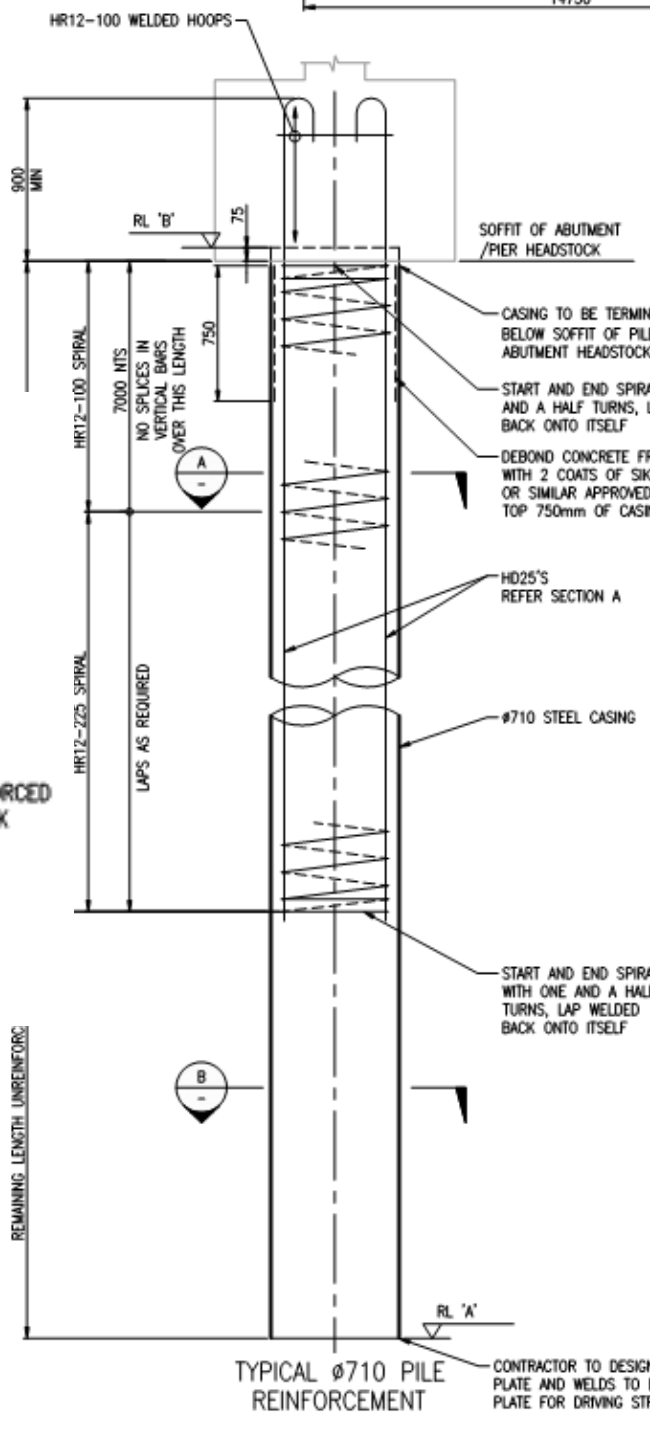

TYPICAL ø710 PILE REINFORCEMENT

Design

Bringing ideas to life

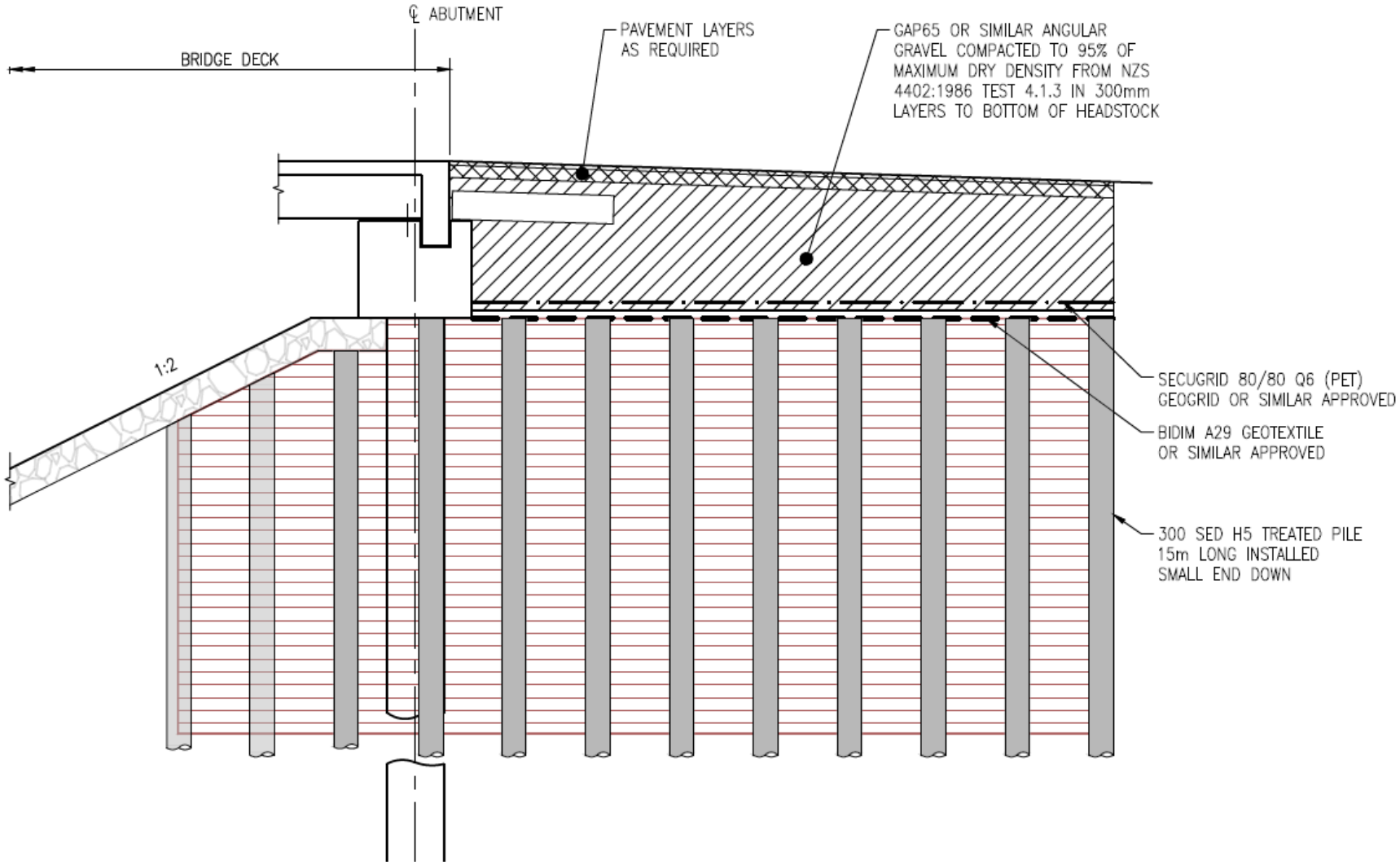

aurecon

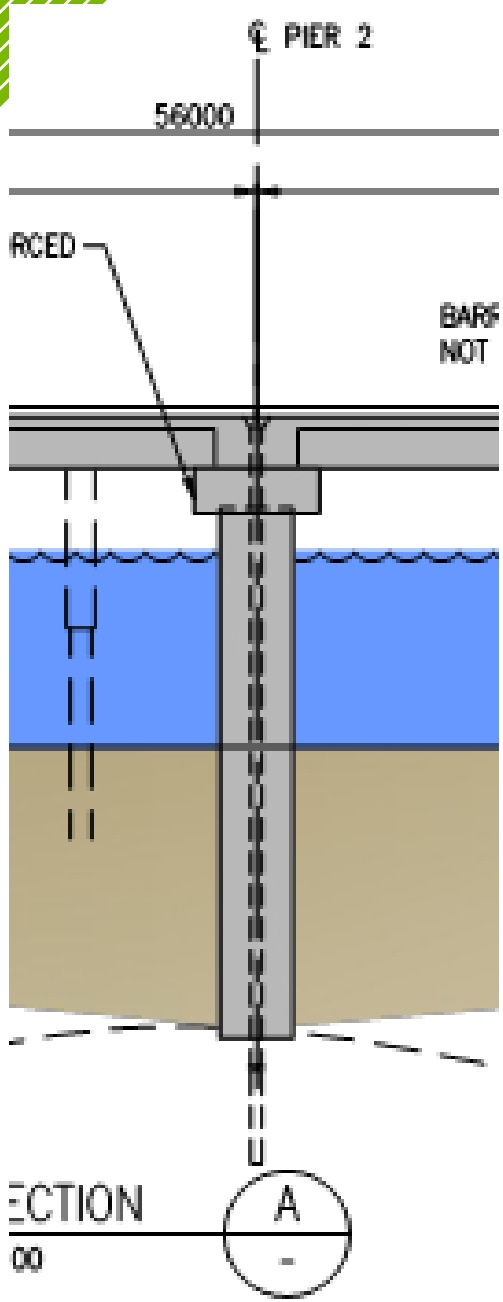
℄ PIER 2
56000
RCED
BARS
NOT
ECTION
A
00

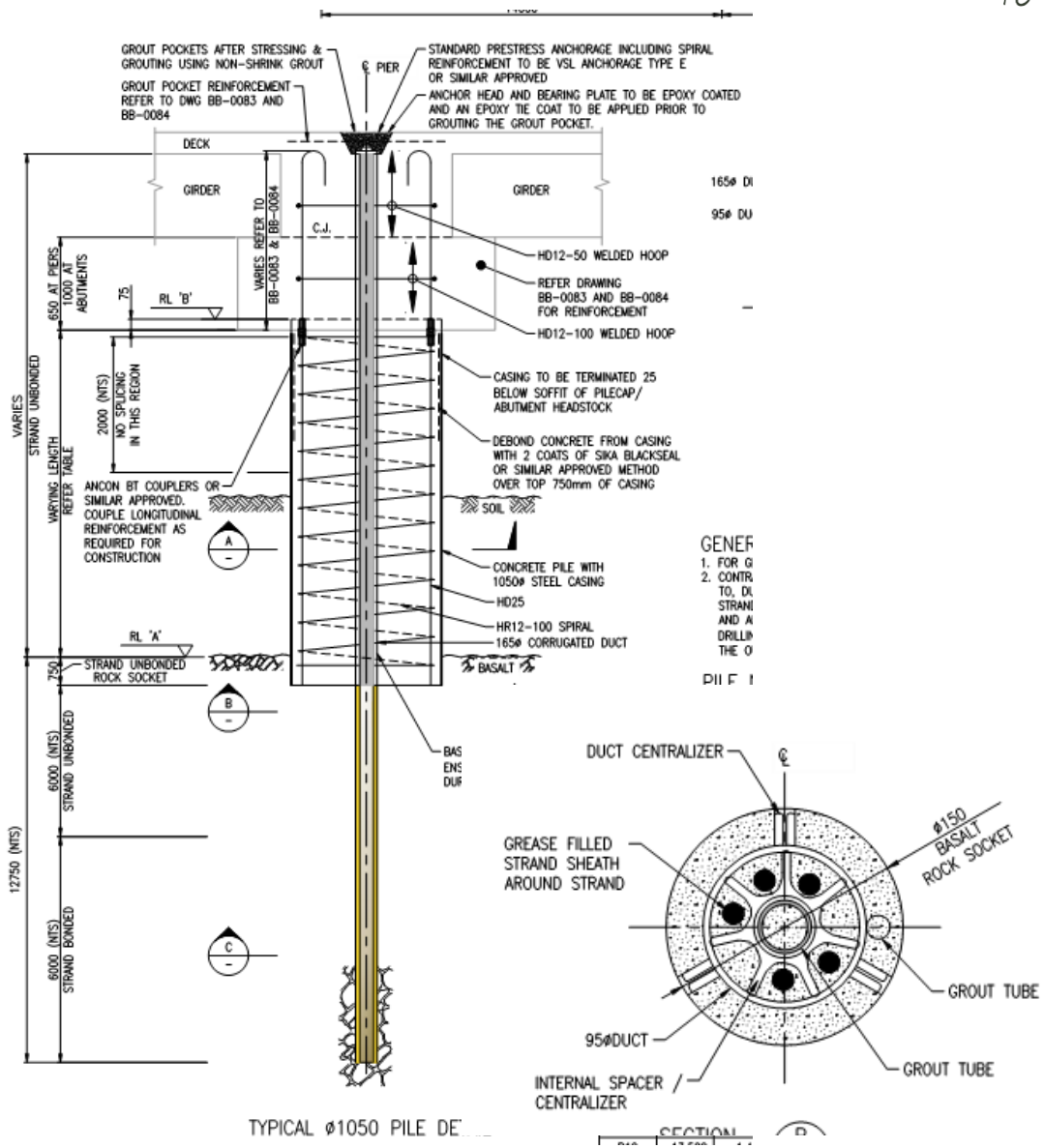
GROUT POCKETS AFTER STRESSING & GROUTING USING NON-SHRINK GROUT
GROUT POCKET REINFORCEMENT REFER TO DWG BB-0083 AND BB-0084
℄ PIER
STANDARD PRESTRESS ANCHORAGE INCLUDING SPIRAL REINFORCEMENT TO BE VSL ANCHORAGE TYPE E OR SIMILAR APPROVED
ANCHOR HEAD AND BEARING PLATE TO BE EPOXY COATED AND AN EPOXY TIE COAT TO BE APPLIED PRIOR TO GROUTING THE GROUT POCKET.
DECK
GIRDER
GIRDER
C.J.
VARIES REFER TO BB-0083 & BB-0084
HD12-50 WELDED HOOP
REFER DRAWING BB-0083 AND BB-0084 FOR REINFORCEMENT
HD12-100 WELDED HOOP
650 AT PIERS
1000 AT ABUTMENTS
75
RL 'B'
2000 (NTS) NO SPLICING IN THIS REGION
VARIES STRAND UNBONDED
VARYING LENGTH REFER TABLE
CASING TO BE TERMINATED 25 BELOW SOFFIT OF PILECAP/ ABUTMENT HEADSTOCK
DEBOND CONCRETE FROM CASING WITH 2 COATS OF SIKA BLACKSEAL OR SIMILAR APPROVED METHOD OVER TOP 750mm OF CASING
ANCON BT COUPLERS OR SIMILAR APPROVED. COUPLE LONGITUDINAL REINFORCEMENT AS REQUIRED FOR CONSTRUCTION
SOIL
A
CONCRETE PILE WITH 1050ø STEEL CASING
HD25
HR12-100 SPIRAL
165ø CORRUGATED DUCT
RL 'A'
750
STRAND UNBONDED ROCK SOCKET
BASALT
B
6000 (NTS) STRAND UNBONDED
12750 (NTS)
6000 (NTS) STRAND BONDED
C
DUCT CENTRALIZER
℄
GREASE FILLED STRAND SHEATH AROUND STRAND
ø150 BASALT ROCK SOCKET
GROUT TUBE
95øDUCT
GROUT TUBE
INTERNAL SPACER / CENTRALIZER
TYPICAL ø1050 PILE DE

aurecon

Construction

- Logistics
- Precast in Suva yard

Construction

- Pile load test

Construction

- Labasa

Questions ?