8th Australian Small Bridges Conference
Surfers Paradise Marriott, Qld, Australia
www.smallbridges.com.au
27-28 Nov 2017

ARCADIS Design & Consultancy for natural and built assets

BLAXLAND'S CROSSING BRIDGE, WALLACIA NSW – BEARING REPLACEMENT

Ken Maxwell – Technical Director, Bridges
Arcadis Australia Pacific, Sydney Office

Incorporating Hyder

Outline of Presentation

- Existing bridge details.
- Load rating.
- Bearing replacement issues and constraints.
- Tender design – bearing replacement support system.
- Alternative design – bearing replacement support system.

Bridge Arrangement

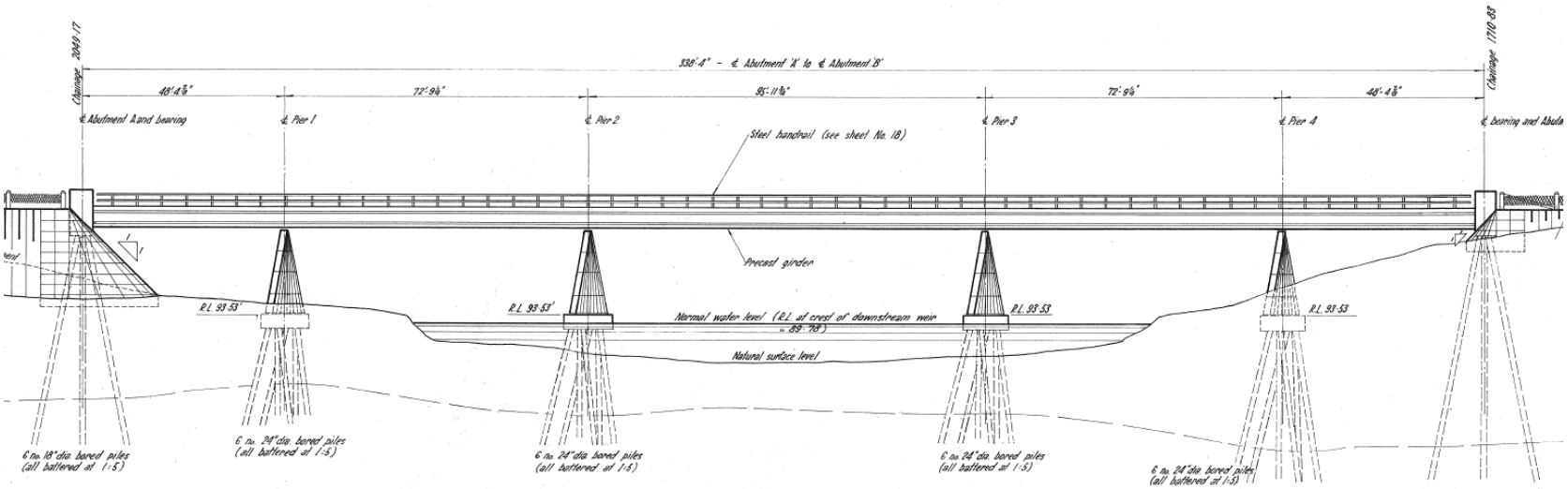

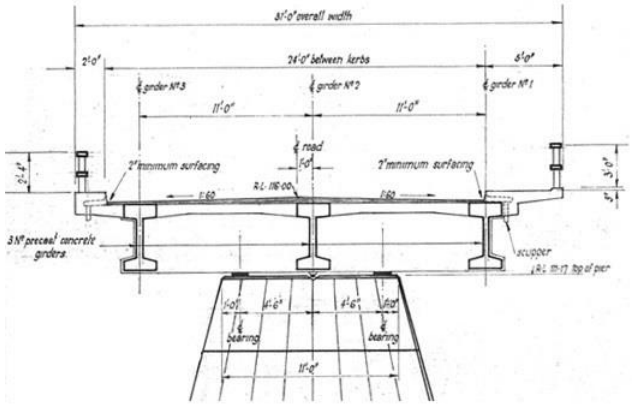

Bridge Configuration

- Major river crossing.

- Twisted pier configuration.

Bridge Superstructure

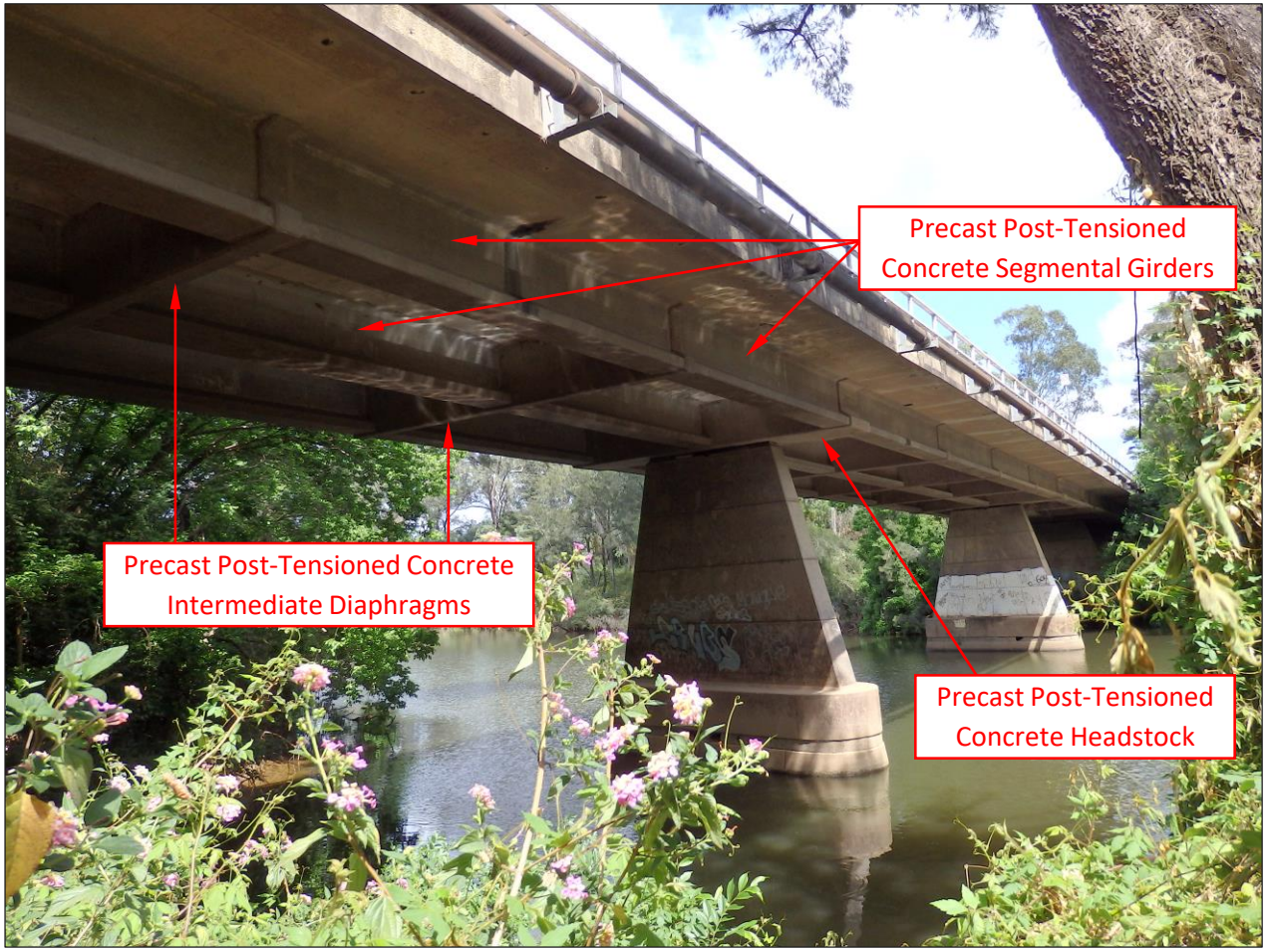

Existing Pier Bearings

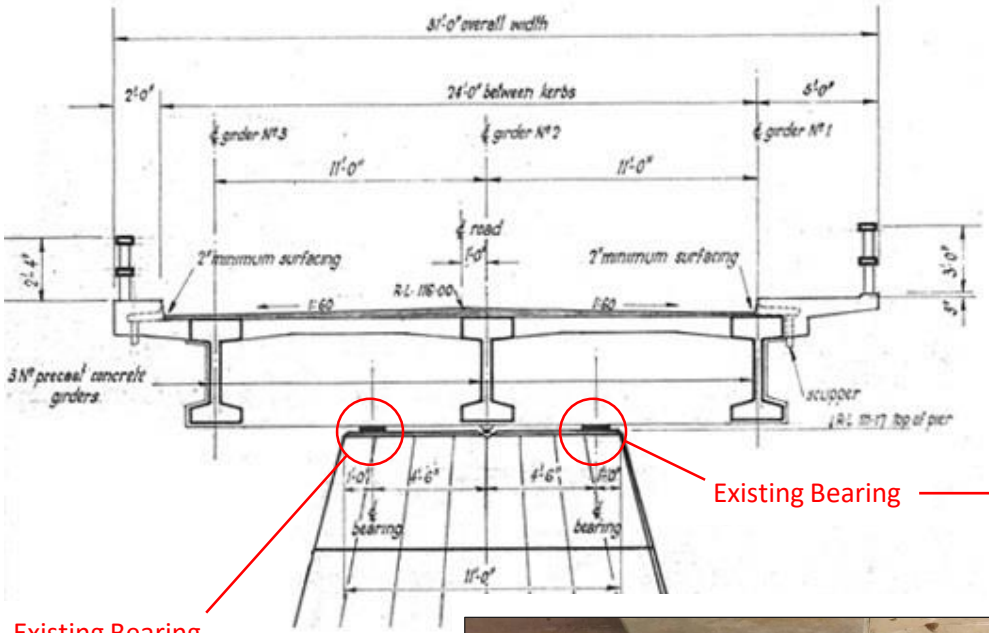

Existing Bearing

Existing Bearing

Neoprene Pad

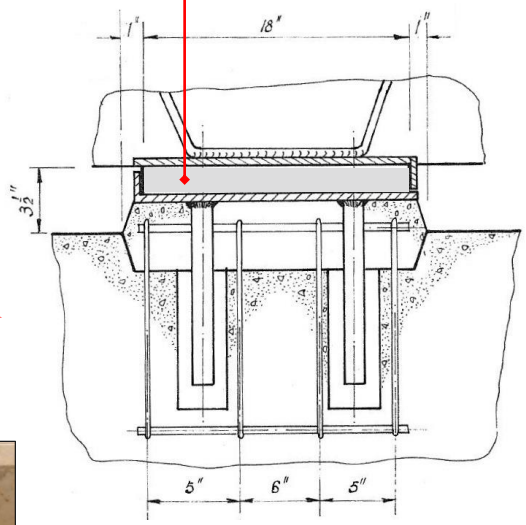

Existing Superstructure Restraint

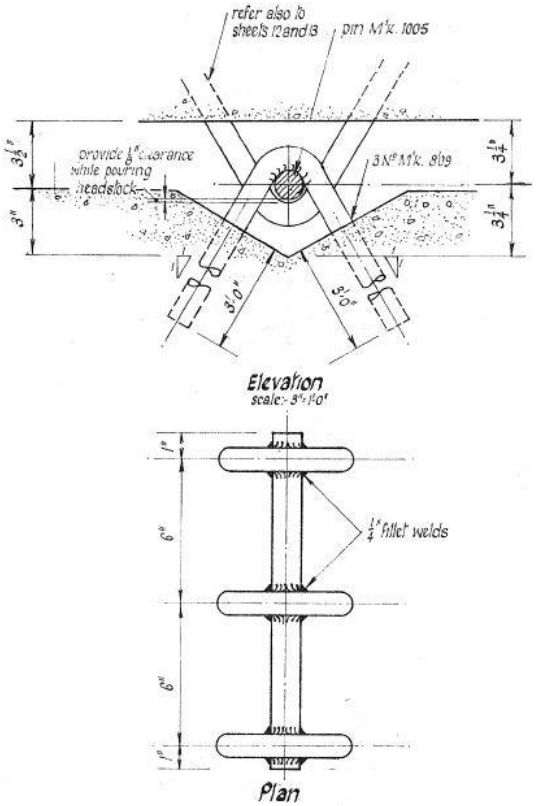

Load Rating

- Bridge would likely had been designed for HS20 truck loading, being a 32.7 tonne semi-trailer, or the separate HS20 lane loading. These load configurations were adopted from the US for the design of bridges in Australia from 1947 up to 1976.
- Design loading appreciably lower than the maximum current vehicle configuration that is allowed unrestricted access on public roads in NSW, being the 42.5 tonne semi-trailer.
- Bearing replacement design to be governed by the theoretical load-carrying capacity of the bridge.
- Following rigorous structural analysis, it was found that the existing superstructure could theoretically carry the proposed Higher Mass Limits (HML) traffic loadings, being the 45.5 tonne semi-trailer and 68 tonne B-Double vehicle load configurations.
- Older bridges often have reserve strength, as structural analysis was typically conservative 50 years ago – more difficult then to model/simulate true load distribution behaviour in a relatively complex superstructure arrangement.
- Design of the replacement bearing system proceeded on the basis of these HML traffic loadings.

Bearing Replacement (Piers) – Constraints

- Continuous superstructure across 5 spans – checking of separate jacking events.
- Minimal vertical clearance between underside of headstock and top of pier (≈ 90 mm).
- Final deck level to be maintained.
- Laminated elastomeric bearings only feasible option.
- Limited design bearing stress at concrete surface (top of pier).

Bearing Stress on Existing Concrete Surface

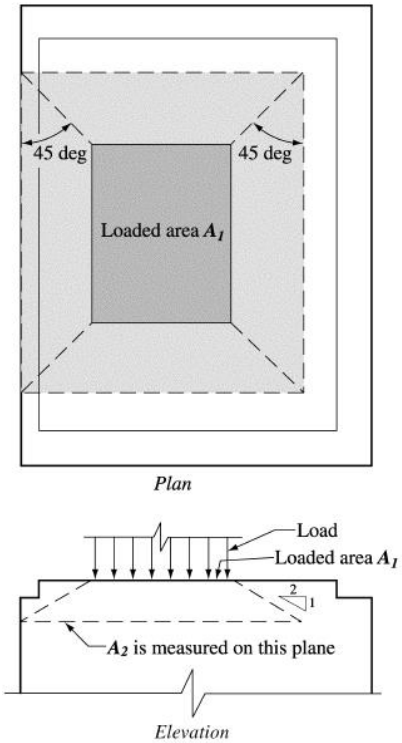

$$\phi 0.9 f_c' \sqrt{(A_2 / A_1)} \text{ or } \phi 1.8 f_c'$$

Limiting design bearing stress at a concrete surface (lower of the two values) (clause 12.9, AS 5100.5 – 2017)

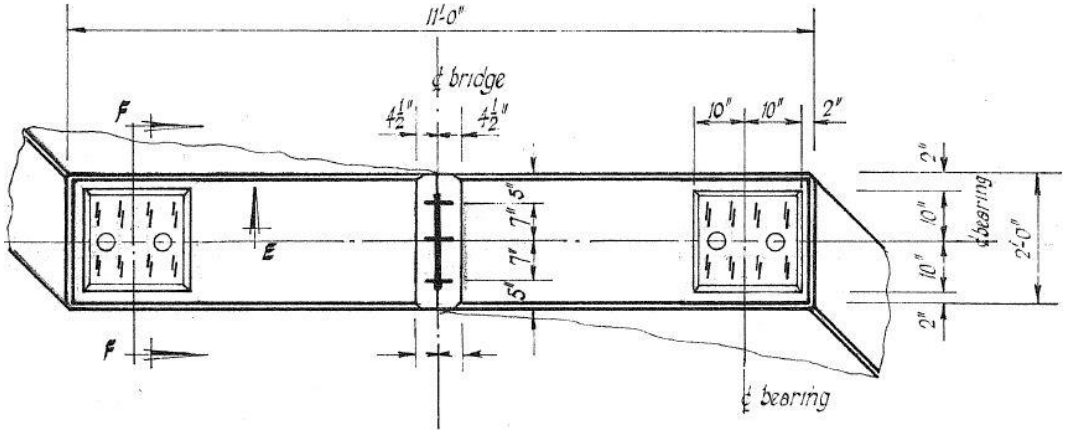

- No proprietary nor specially-designed bearing were found to satisfy requirements.
- Only feasible option to be new bearing supports extending off existing piers.

Tender Design – Concrete Bearing Support

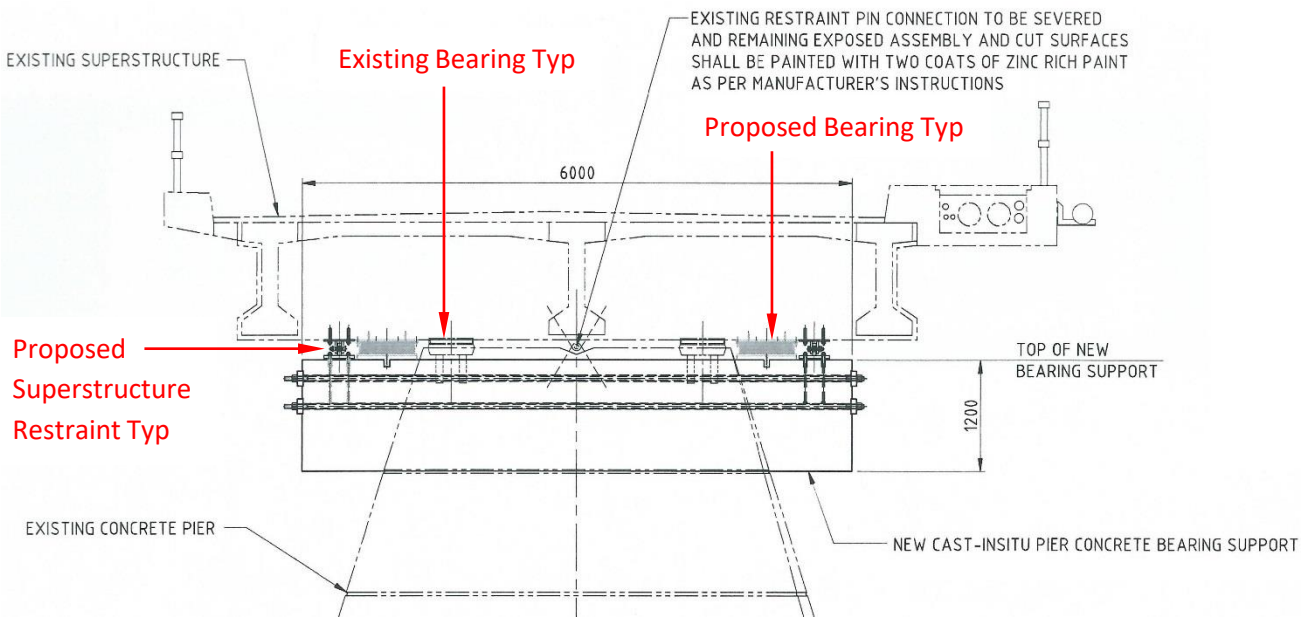

- Cored holes into and through the piers for reinforcement attachment.
- High-tensile bars.
- Insitu concrete construction.

Tender Design – Concrete Bearing Support

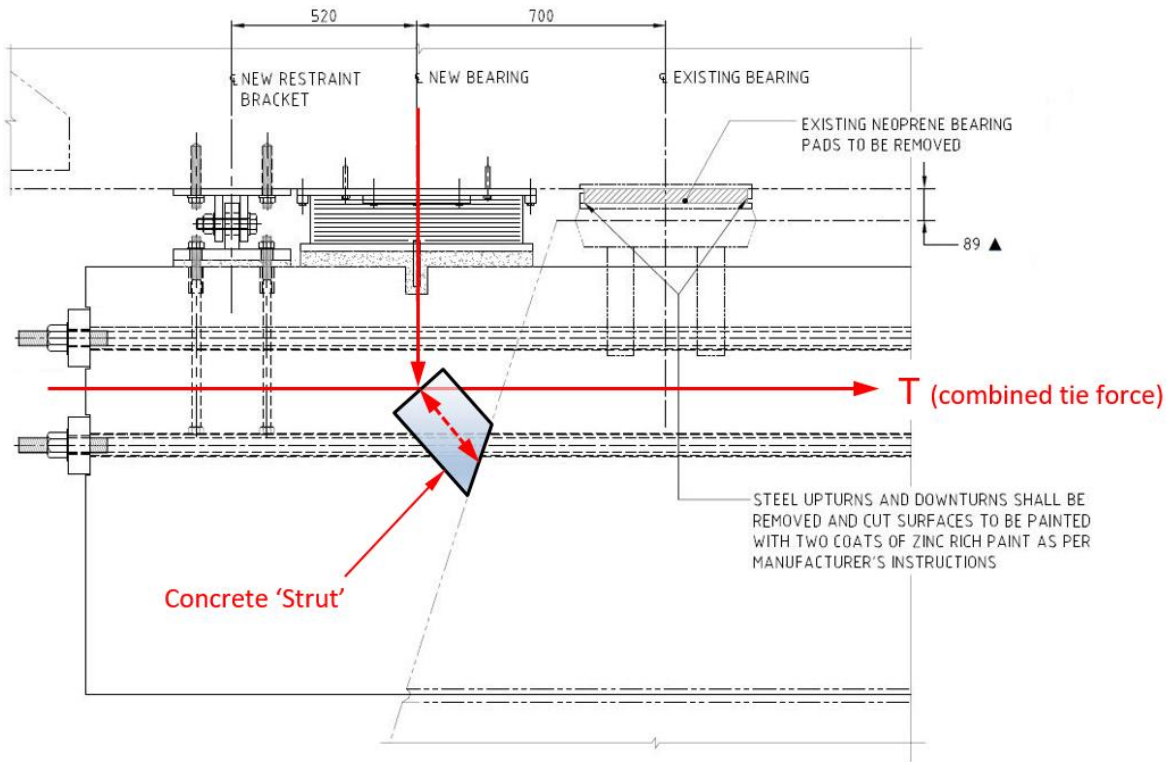

- Basis of design: Strut-and-tie structural behaviour.

Tender Design – Concrete Bearing Support

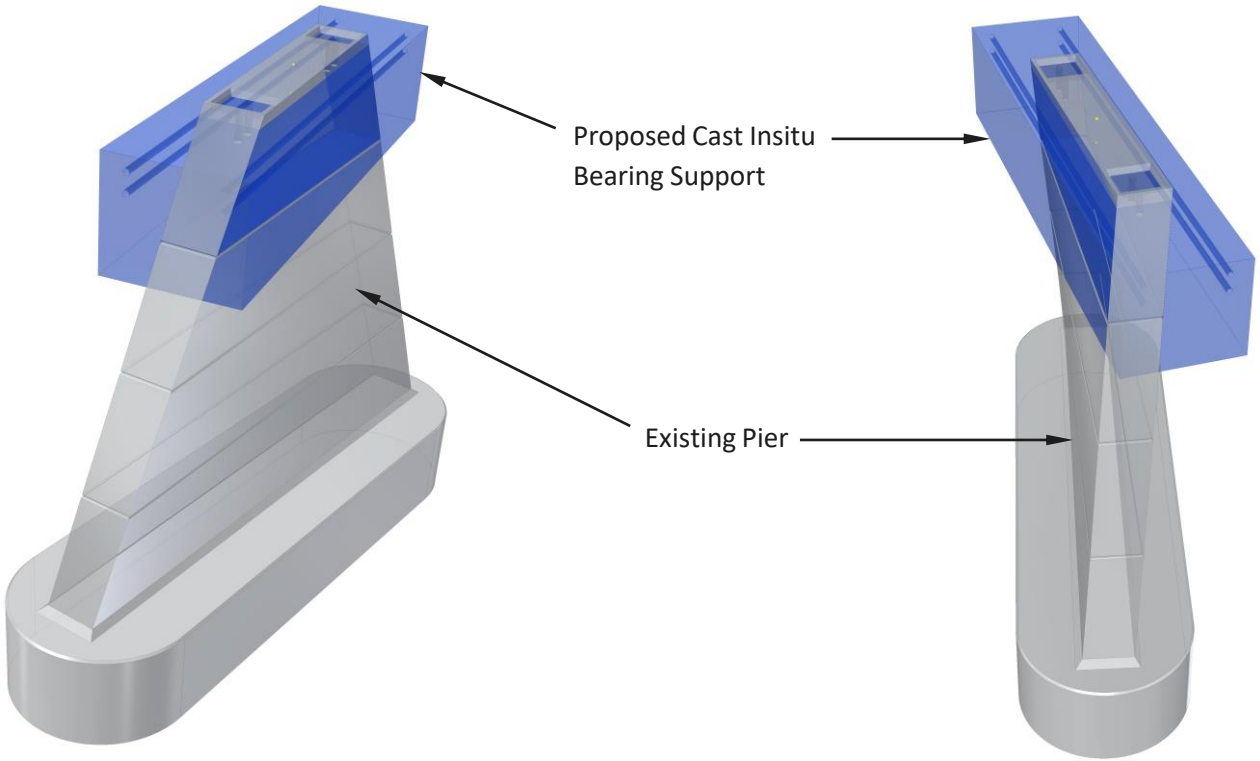

- High-tensile tie bars carefully modelled to clear ‘twisted’ pier.

Tender Design – Superstructure Restraint

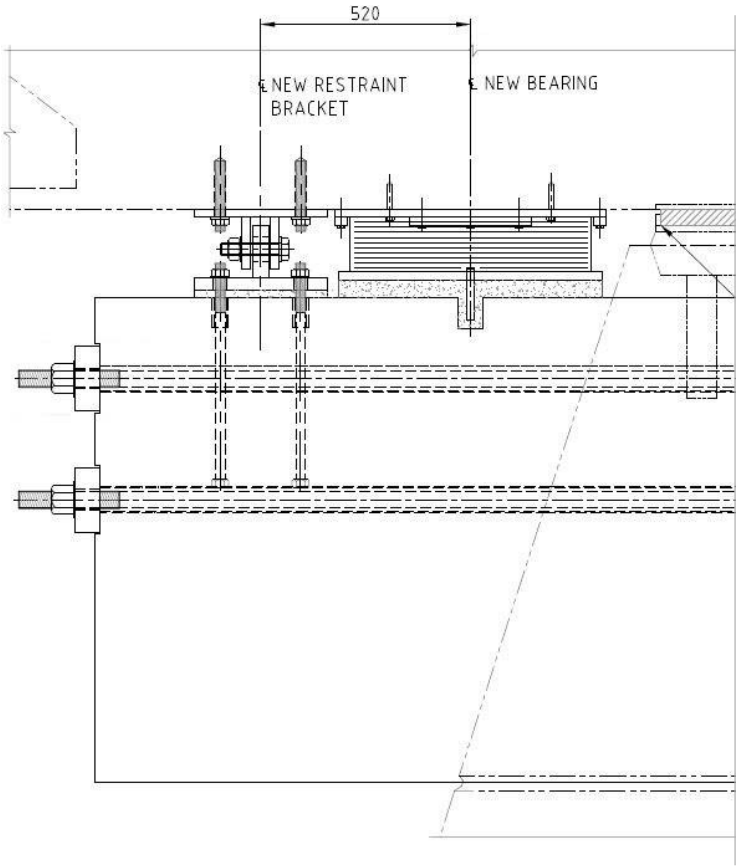

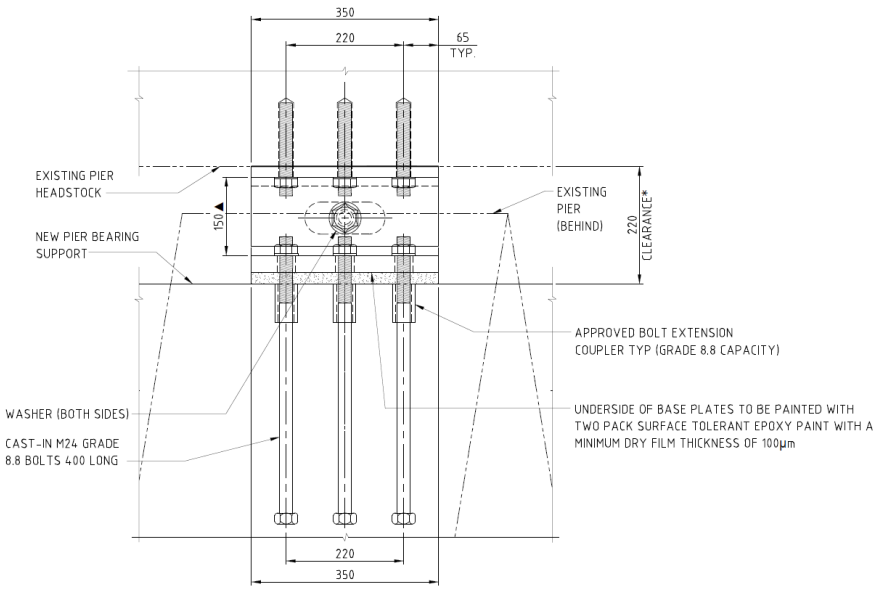

- Designed to prevent dislodgement of superstructure during flood event or earthquake.

Alternative Design – Steel Brackets

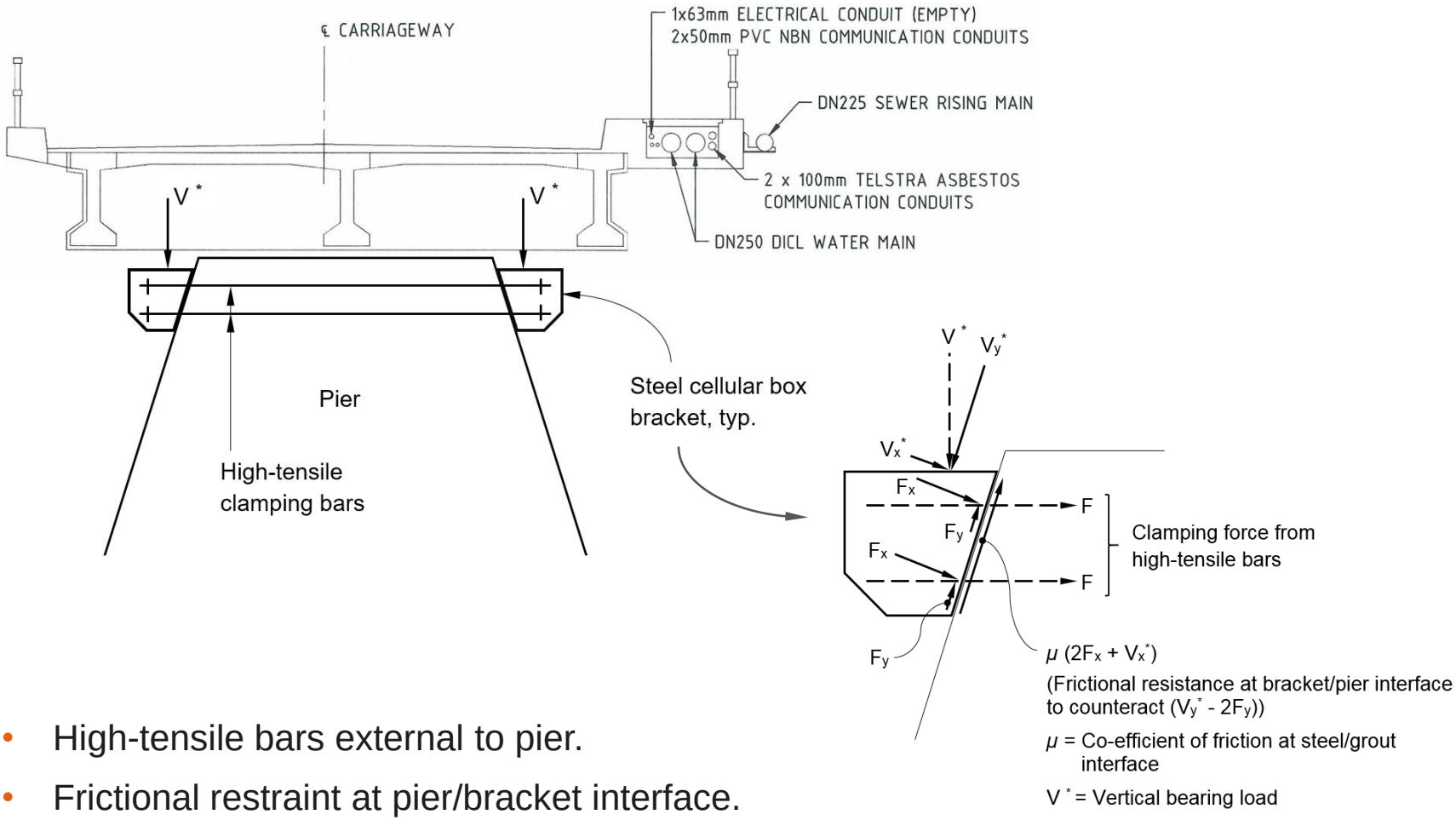

- High-tensile bars external to pier.
- Frictional restraint at pier/bracket interface.

Jacking of Superstructure

- Construct new bearing support (tender design) or install new bearing brackets (alternative design).
- Install new superstructure restraints.
- Sever existing superstructure restraint (interlocking ‘hairpin’ bars) by cutting legs of upper ‘hairpin’ bars.
- Install flat jacks and jack up superstructure, initially decompressing existing neoprene bearing pads and then removing vertical loads from existing bearings.
- To prevent uplift at one of the jacks at the piers, single-lane contraflow traffic is required on the bridge during the jacking operation only (until new superstructure restraints are engaged). Traffic lane to be centralised within existing carriageway width.
- Install replacement elastomeric bearings, shim base plate (or use levelling bolts) to snug fit beneath pier headstock.
- Lower bridge onto new bearing supports and remove jacks.
- Repeat above process at next pier.

Jacking of Superstructure

Proposed Abutment Bearing Restraint

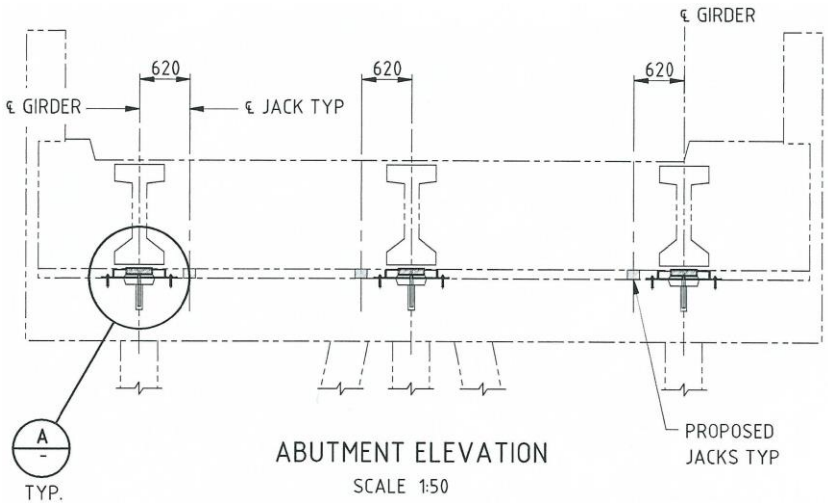

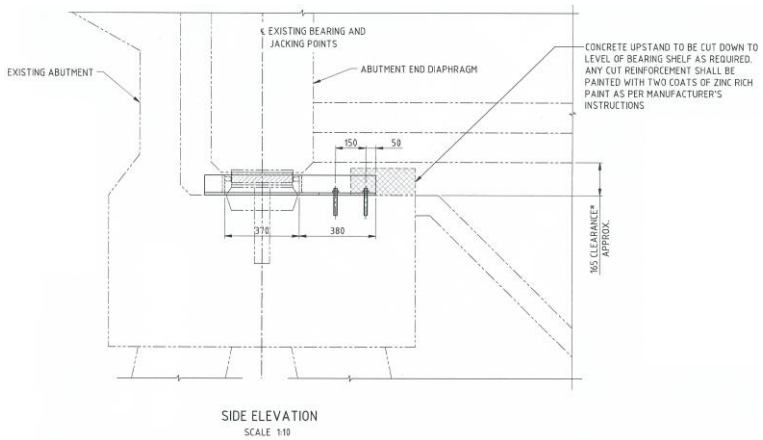

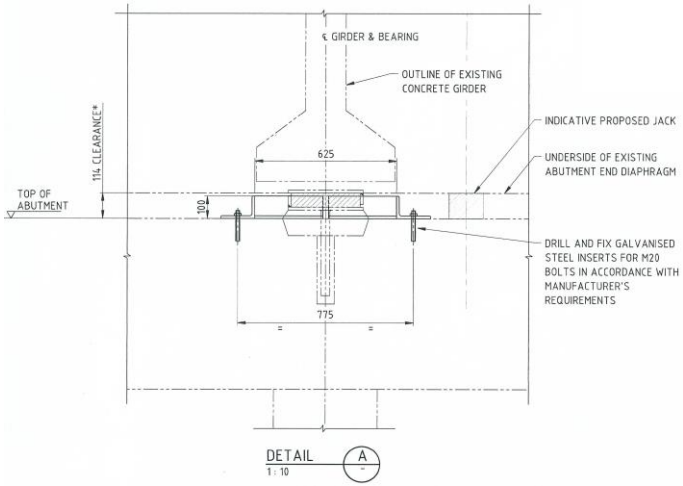

Proposed Abutment Bearing Restraint

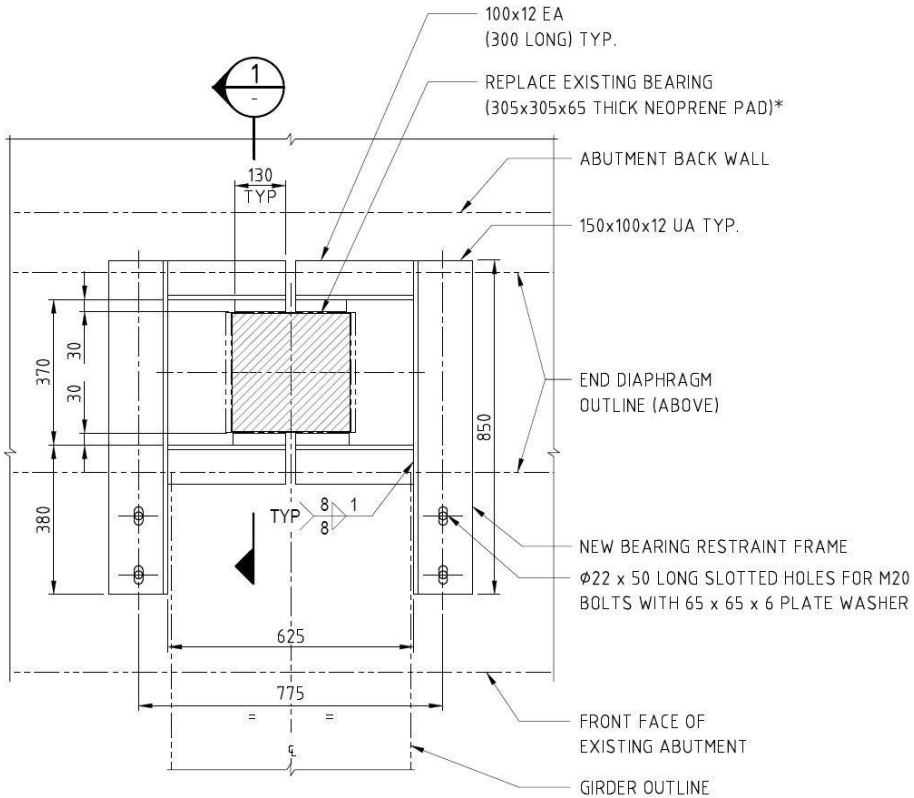

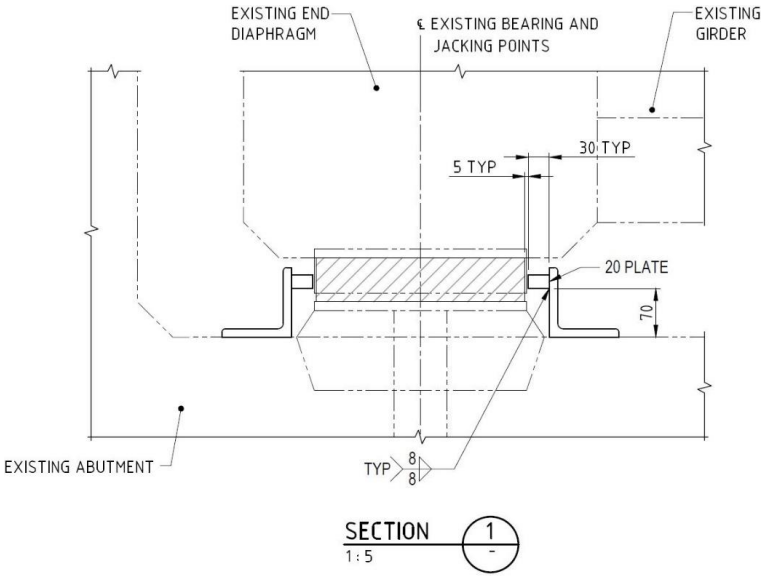

- Frame designed to prevent bearing ‘crawl’.
- Specially-designed elastomeric bearing pads.

Comparison – Bearing Support Systems

	Tender Design	Alternative Design
Ongoing maintenance *	No	Yes
Flood impact vulnerability	No	Yes
Construction cost	Higher	Lower
Construction duration	Longer	Shorter
Prefabricated elements *	No	Yes

* In relation to bearing support system.

Conclusions

- The Council-accepted alternative design represents an economical scheme, without the need to core numerous holes into and through the piers.
- However, the following long-term issues should be considered with this ‘alternative design’ type of system:
  - Blaxland’s Crossing Bridge is often inundated in flood events. The exposed (thereby vulnerable) high-tensile clamping bars are primary structural elements and cannot tolerate any damage due to floating debris.
  - Post-tensioning force in the high-tensile bars shall be maintained over the design life, as a minimum clamping force is required to provide the frictional resistance to the applied loading, thereby preventing slippage of the brackets.
- The tender design prepared by Arcadis, while requiring extensive work at the piers, represents a feasible bearing replacement solution. Once constructed, there would have been very little maintenance intervention required by Council over its life cycle.

Thank you for your attention