Bringing ideas to life

Design of Reinforced Concrete Civil Structures to Mitigate Against Stray Current Corrosion within a Rail Corridor

Colin Morrow, Senior Bridge Engineer

Small Bridges Conference
Surfers Paradise

28/11/2017

aurecon

Bringing ideas to life

Introduction

- How Do Stray Currents Occur in a Rail Environment?
- How do Stray Currents Lead to Corrosion?
- Which Structures are affected by Electrolysis Corrosion?
- Guidance & Design Standards
- Electrolysis Corrosion Mitigation Measures
- Testing
- Conclusions and Recommendations

aurecon

How Do Stray Currents Occur in a Rail Environment?

How Do Stray Currents Occur in a Rail Environment?

Bringing ideas to life

- Direct current used to power rail networks (1500 kV)
- The track rails are the return conductor
- Electrical substations typically spaced between 5km and 15km

aurecon

How Do Stray Currents Occur in a Rail Environment?

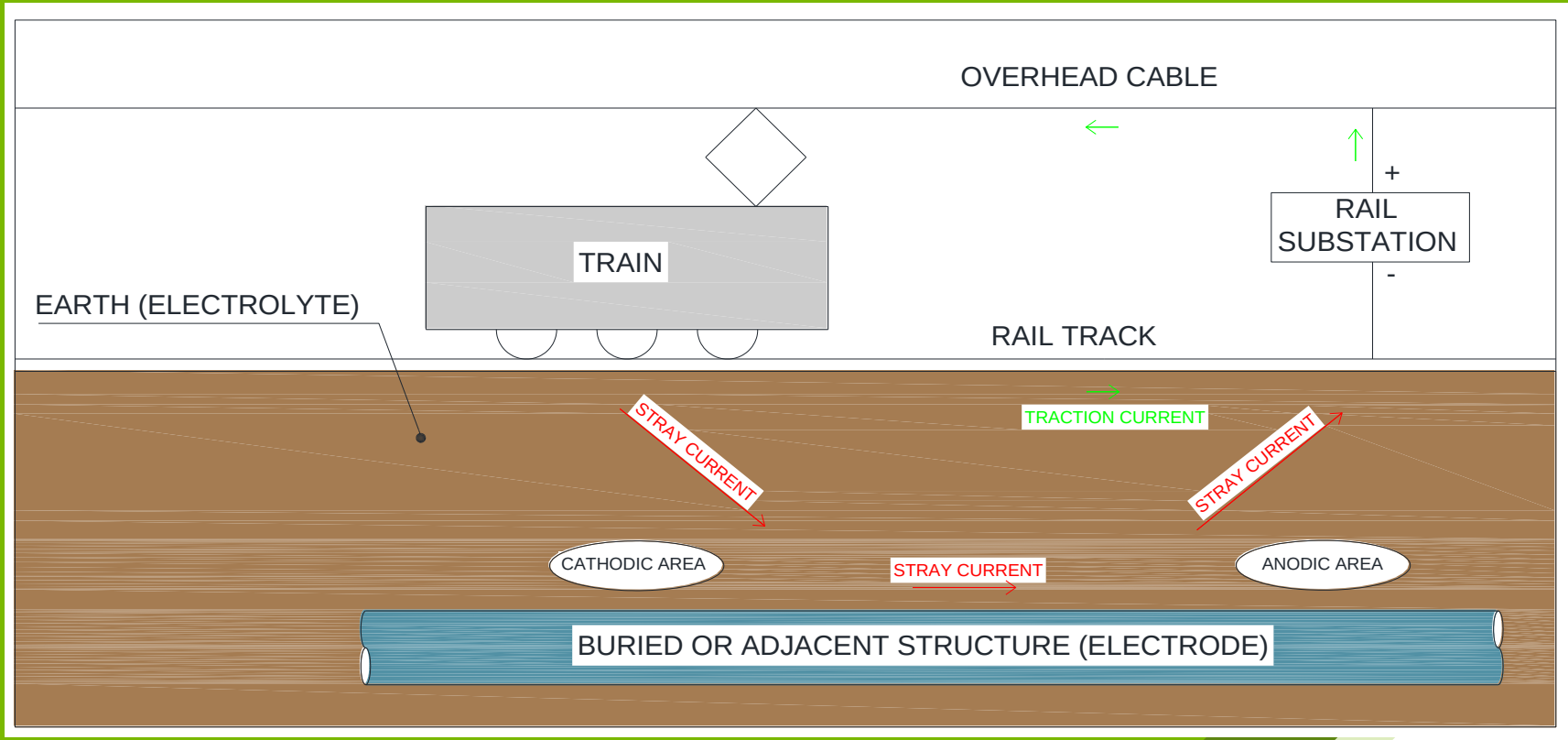

How Do Stray Currents Occur in a Rail Environment?

Bringing ideas to life

- IDEALLY: Current flows directly to the substation back though the rails
- REALITY: Not all current travels directly to substation
- Portion of current travels along alternative path through earth and conductive structural elements

= STRAY CURRENT

- Difficult to analyse magnitude of stray current and flow paths

aurecon

How Do Stray Currents Occur in a Rail Environment?

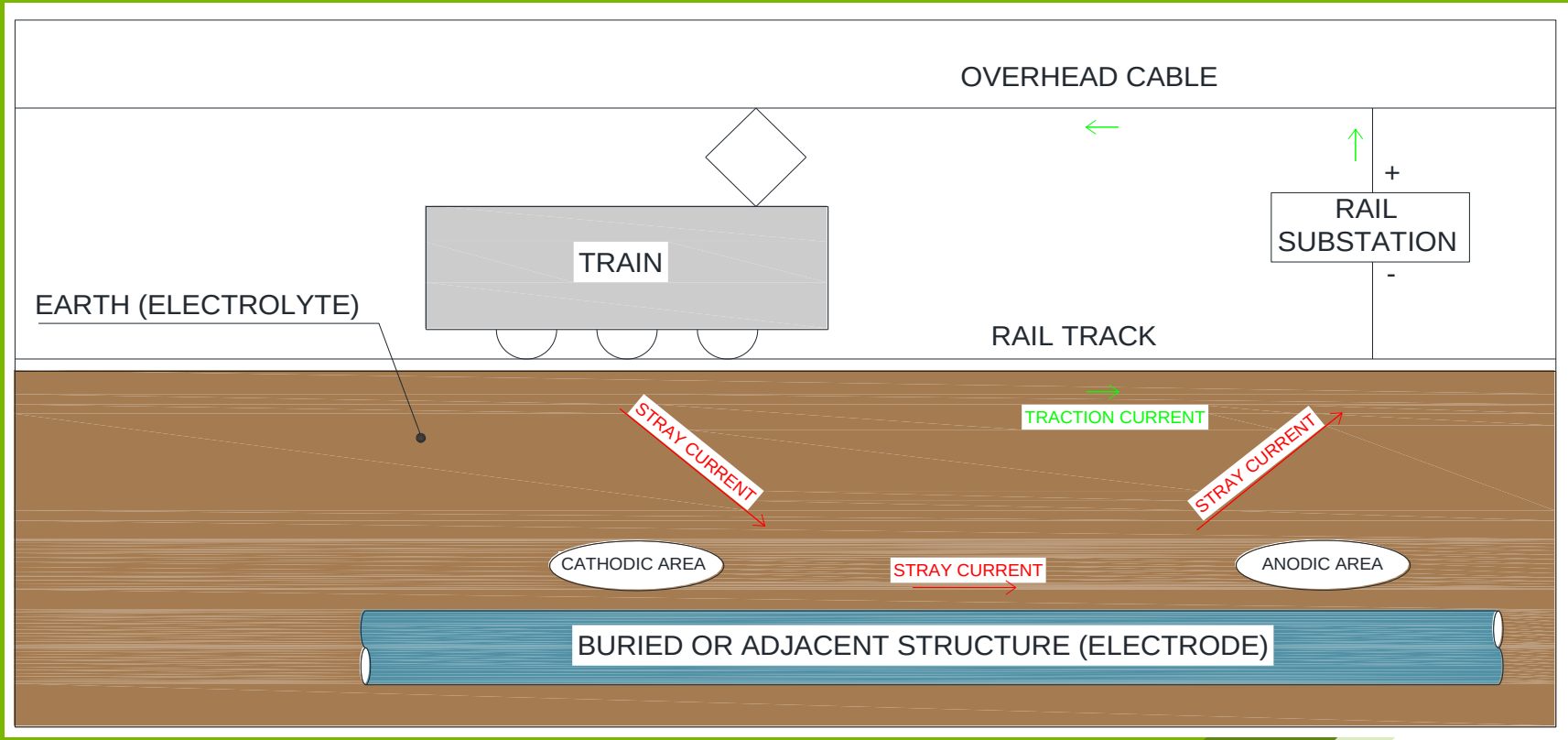

How Do Stray Currents Lead to Corrosion?

How Do Stray Currents Lead to Corrosion?

Bringing ideas to life

Current will be conducted through the reinforced concrete structure, taking the path of least electrical resistance.

@ Current Pickup Location:
Structure becomes cathodic and will experience material gain

@ Current Discharge Location:
Structure becomes anodic and will experience material loss

This loss of material is known as **Electrolysis Corrosion**.

aurecon

How Do Stray Currents Lead to Corrosion?

Bringing ideas to life

Anodic portion of the structure will experience metal loss at a rate proportional to the current flow.

$$m = \frac{Q}{F} \times \frac{M}{z}$$

m	=	Mass of the substance liberated at an electrode in grams
Q	=	Total electric charge passed through the substance
F	=	Faraday constant (= 96,485 C/mol)
M	=	Molar mass of the substance
z	=	Valency number of ions of the substance

$$m \propto Q$$

Due to the large currents powering trams or trains, even currents flowing for short periods of time can cause considerable corrosion on affected structures.

aurecon

Which Structures are Affected by Electrolysis Corrosion?

Bringing ideas to life

Reinforced Concrete Degradation Mechanism

- Build up of corrosive product on bars will lead to crack forming and possible spalling
- A metal loss thickness loss can be assumed to estimate the timeframe prior to cracking may be expected

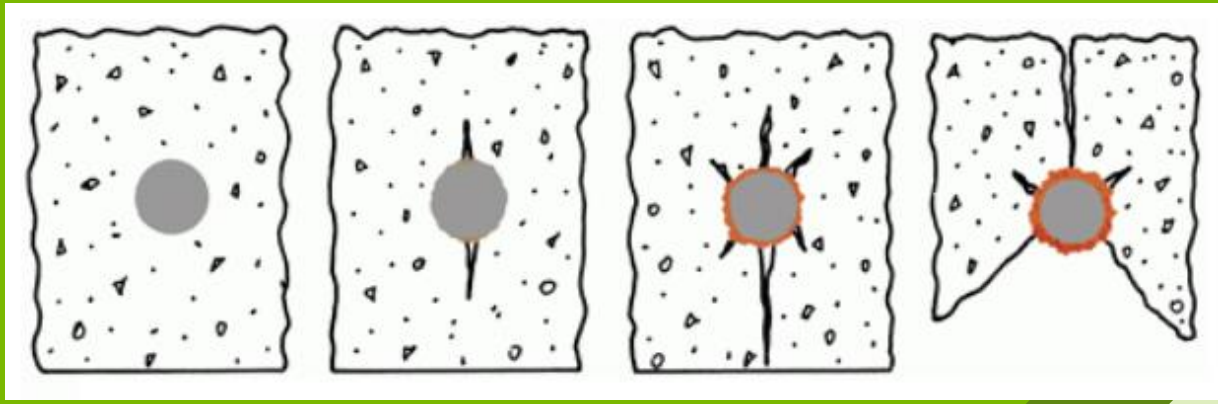

aurecon

Which structures are affected by Electrolysis Corrosion?

Which Structures are Affected by Electrolysis Corrosion?

Bringing ideas to life

Typically, the risk of corrosion is greatest for buried (or partially buried) reinforced concrete elements:

- Bores piles
- Foundations
- Retaining Walls
- Tunnels

Steel elements are more at risk of conducting stray current than reinforced concrete elements

aurecon

Which Structures are Affected by Electrolysis Corrosion?

Bringing ideas to life

Structures at risk do not need to be buried

Reinforced concrete culverts, bridges or viaducts supporting rail can be at high risk

- Directly connected to earth
- Poor track insulation

aurecon

Guidance & Design Standards

Guidance & Design Standards

Bringing ideas to life

STATE	DOCUMENT	OVERVIEW
MTM	L1-CHE-STD-010 “Railway Bridges Electrical Protection and Bonding”	Detailed requirements for the electrical continuity and isolation of bridges and retaining walls.
Victoria		
ASA	EP-12-30-00-01-SP “Electrolysis from Stray DC Current”	Guidance document highlighting possible mitigation measures for stray current effects.
New South Wales		
DTMR	“Interim Guide to Development in a Transport Environment: Light Rail”	High level guidance relating to the technical considerations relating to stray current effects.
Queensland		
EuroNorm	EN 50122-2 Part 2: “Provisions against the effects of stray current cause by d.c. traction systems”	Comprehensive guidance and a calculation basis to assess the stray current generated by a direct current system

Electrolysis Committee documents also useful.

aurecon

Electrolysis Corrosion Mitigation Measures

Electrolysis Corrosion Mitigation Measures

Bringing ideas to life

1. Provision of Electrical Segregation
2. Provision of Electrical Continuity
3. Isolation of Structural Elements from Stray Current
4. Isolation of Rail Tracks from Earth
5. Use of Drainage Bonds

aurecon

Electrolysis Corrosion Mitigation Measures

Bringing ideas to life

Provision of Electrical Segregation

- risk of electrolysis corrosion occurring increases with the extent of the electrically continuous section of a structure

- Reducing the size or length of a continuous element or segregating the element into smaller elements will reduce the risk or impact of stray current corrosion.

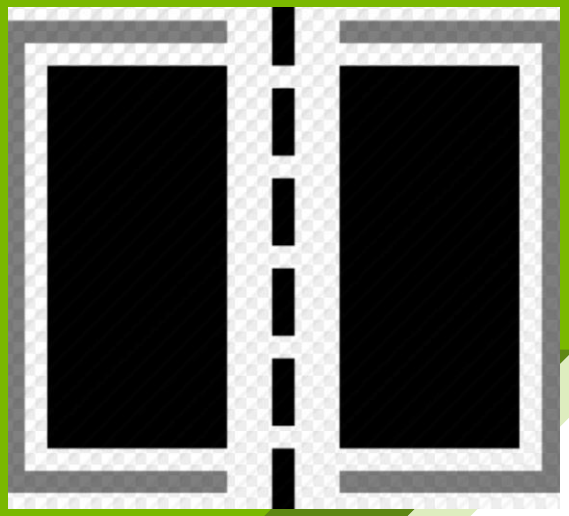

aurecon

Provision of Electrical Continuity

The reinforcement within a reinforced concrete element subject to stray currents should be made continuous, in order to:

- provide larger steel mass from which the current will leave the structure
- minimise effects of bar to bar corrosion

Isolation of Structural Elements from Stray Current

Complete separation of the structural elements can eliminate the risk of stray currents occurring within the structure;

- Supporting the bridge deck on elastomeric bearings
- Installation of plastic membranes or sleeves around footings and foundations

Electrolysis Corrosion Mitigation Measures

Bringing ideas to life

Isolation of Rail Tracks from Earth

- complete electrical isolation of the rails from earth eliminates the flow of stray current back to the substation.
- Isolation can be achieved using insulating pads and washers at the track to sleeper connection.
- Solution not always practical

- Maintenance and replacement an issue!

aurecon

Electrolysis Corrosion Mitigation Measures

Bringing ideas to life

Use of Drainage Bonds

Electrical drainage bonds directly connect the reinforced concrete element (electrode) to the substation to eliminate material loss at the anode.

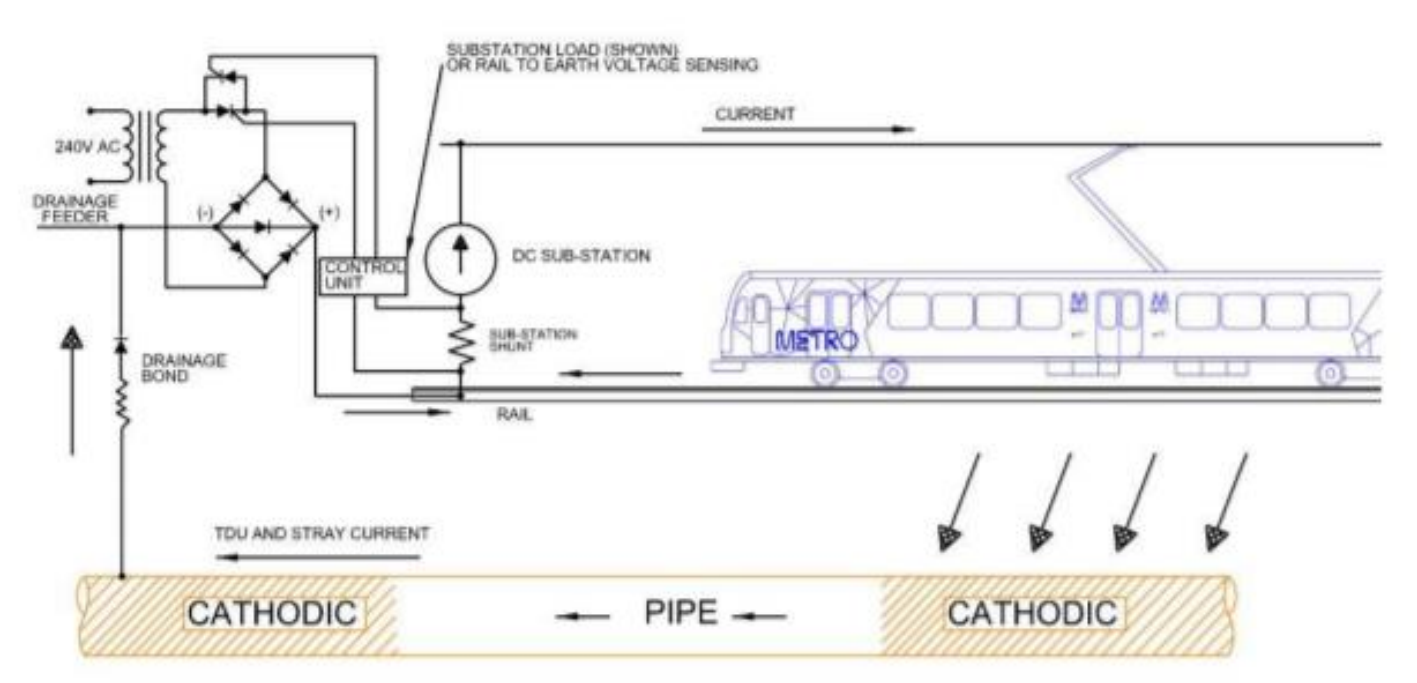

aurecon

Provision of Electrical Segregation

Provision of Electrical Segregation

Bringing ideas to life

Segregation of Retaining Wall Structures

- Length of continuous retaining wall along track to be limited

FMBH Project Example:

- The structure consists of bored piles joined with reinforced shotcrete walls
- piles connected with a pile cap which supports a precast concrete barrier and metallic safety screen.

aurecon

Provision of Electrical Segregation

Segregation of Retaining Wall Structures

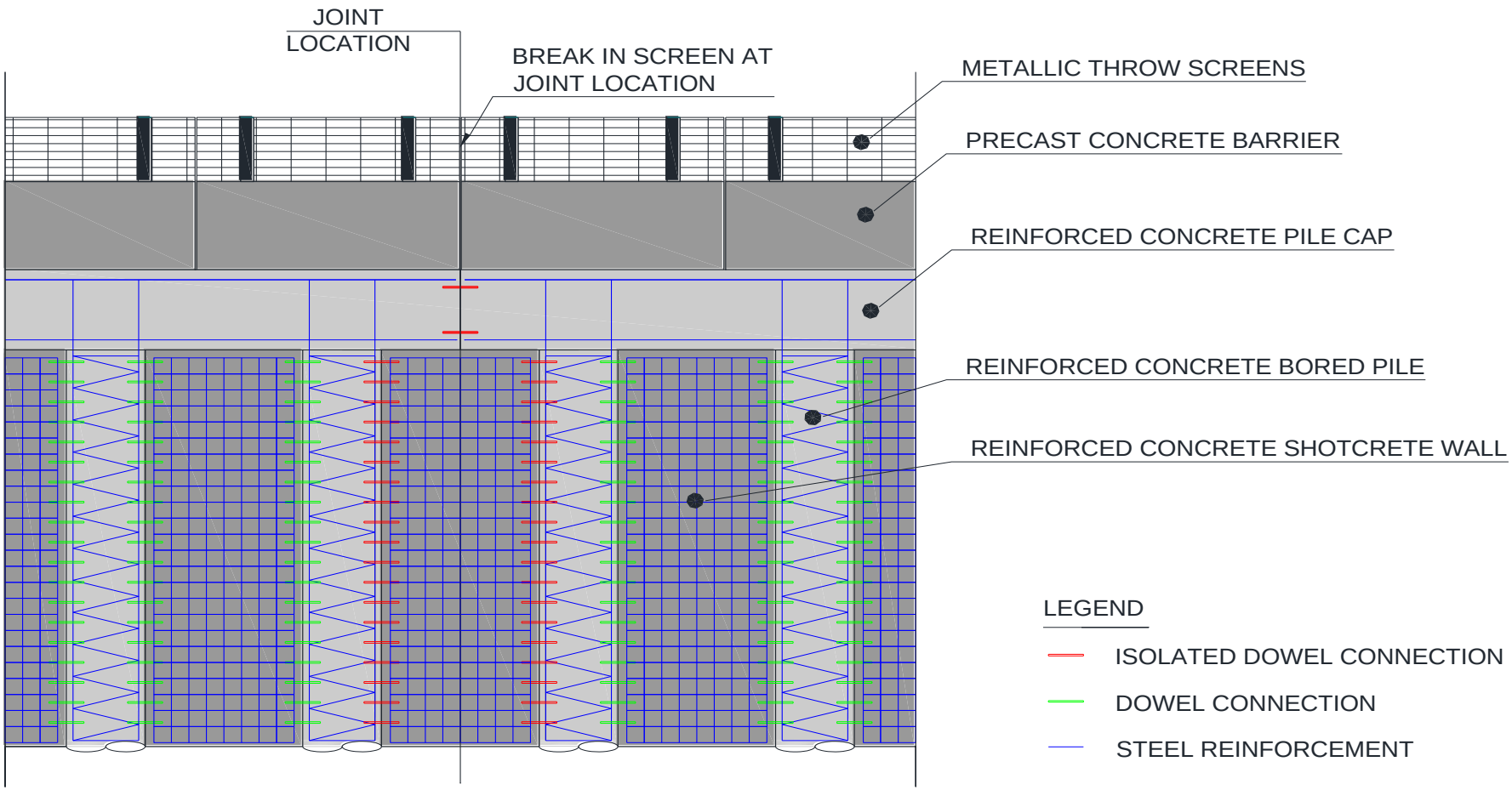

Schematic Wall Elevation

Bringing ideas to life

aurecon

Provision of Electrical Segregation

Segregation of Retaining Wall Structures

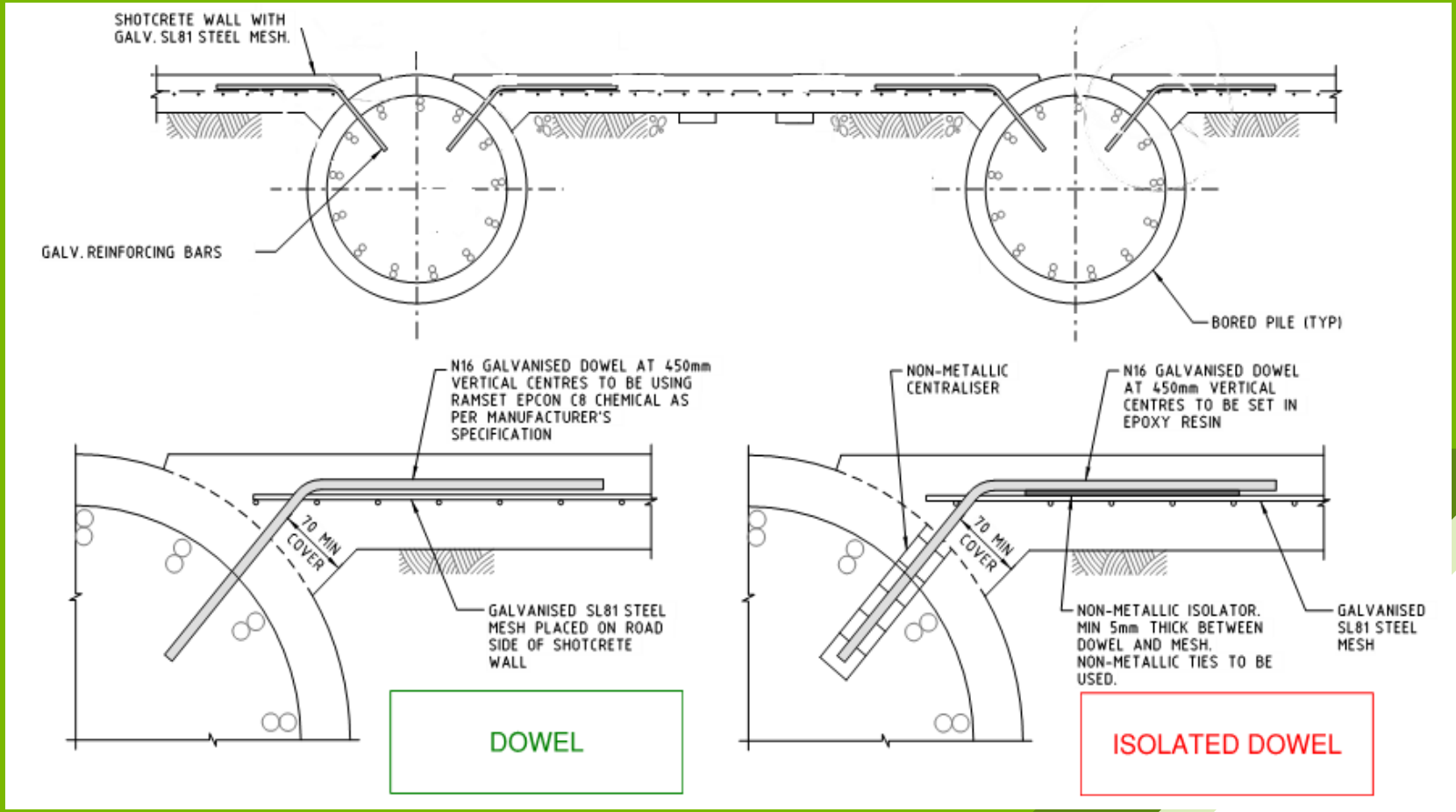

Bringing ideas to life

Provision of Electrical Segregation

Segregation of Bridge Structures

- Continuous bridge lengths along rail tracks to be limited

<u>FMBH Project</u>

- Main Road bridge structure with span of 20m and width of 75m
- Superstructure consisted of prestressed beams and was integral at the abutment
- structure electrically split at deck step location with no continuity of concrete or steel

aurecon

Provision of Electrical Segregation

Segregation of Bridge Structures

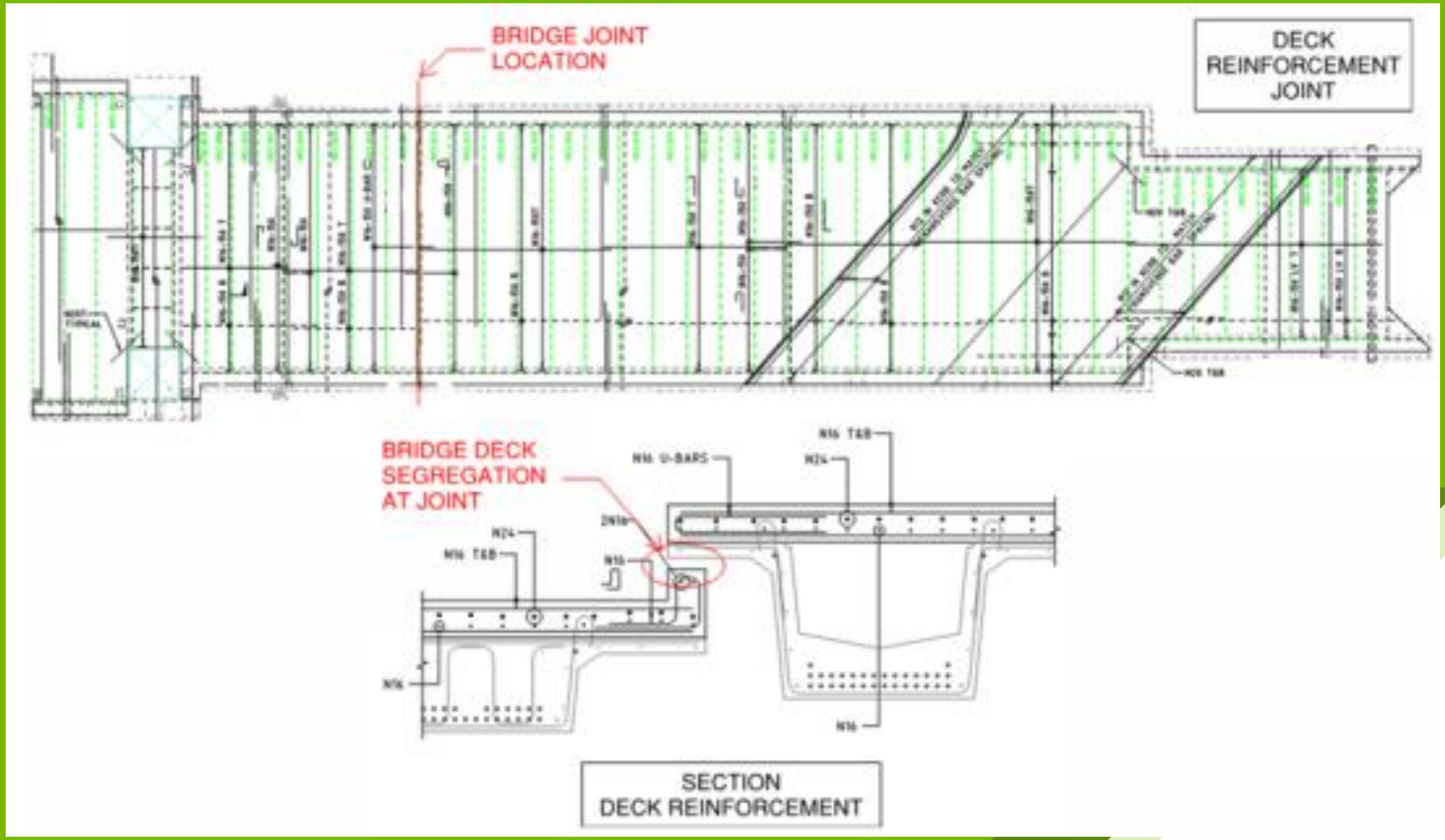

Bringing ideas to life

aurecon

Provision of Electrical Segregation

Bringing ideas to life

FMBH Project

- bored pile foundations of the bridge and the pile cap are split
- bridge is further separated from any adjacent walls to ensure the continuous structure length is minimised

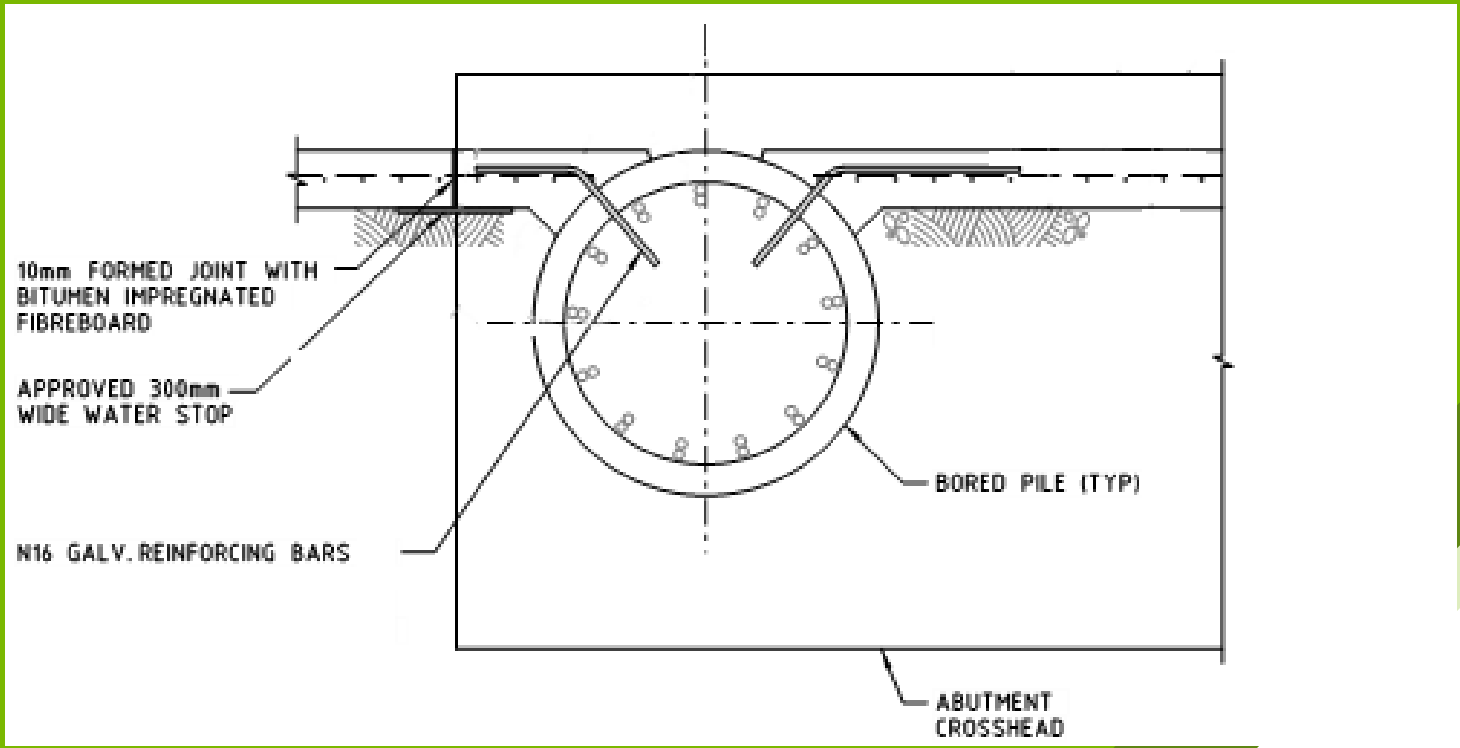

aurecon

Provision of Electrical Segregation

Overhead Wiring Supports on Bridges

Where the overhead wires are supported from the bridge deck, they are provided with isolated connections.

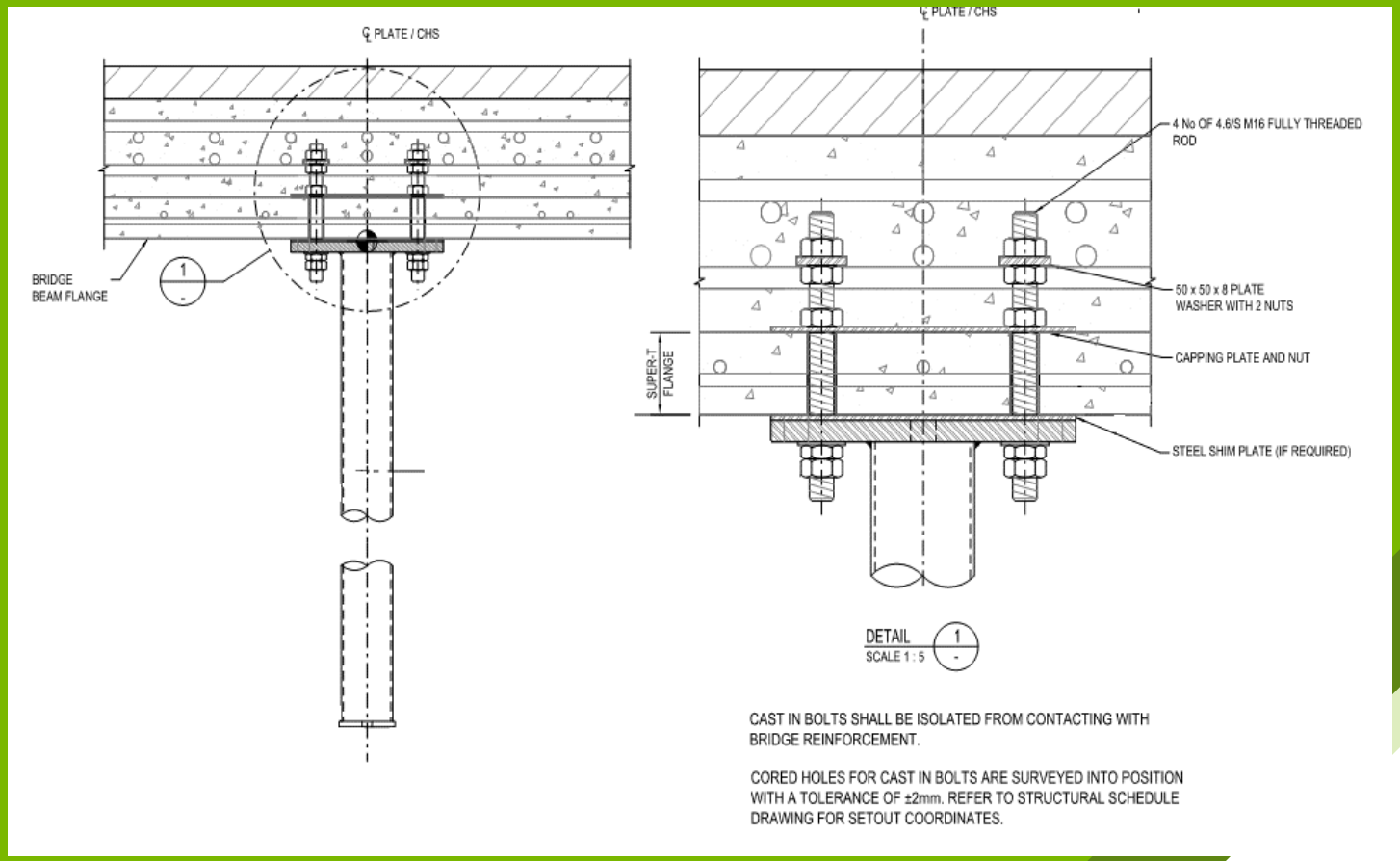

Provision of Electrical Continuity

Provision of Electrical Continuity

Continuity of Piles

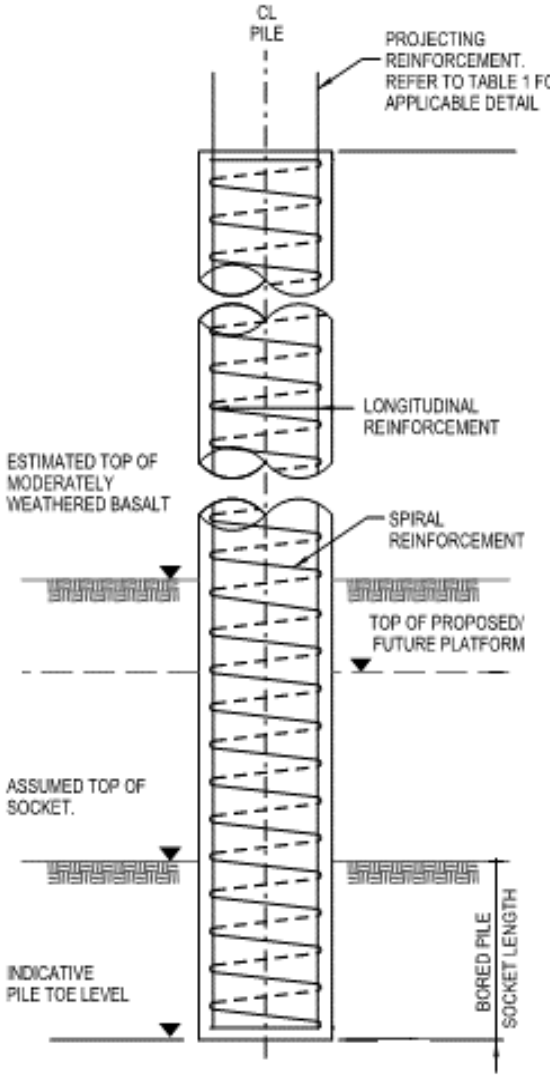

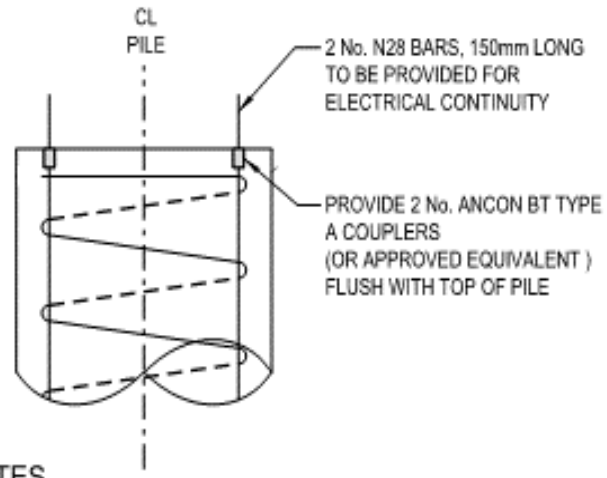

NOTES

1. PILE REINFORCEMENT SHALL BE INSTALLED AS A CONTINUOUS CAGE FOR ELECTROLYSIS REQUIREMENTS BY:

- MAKING TWO (2) BUNDLES OF LONGITUDINAL BARS CONTINUOUS OVER THE ENTIRE LENGTH (INCLUDING ALL LAPS)

- WELDING ALL LONGITUDINAL BARS TO THE SPIRAL REINFORCEMENT AT TOP, BOTTOM AND MIDDLE OF THE PILE

- CONTINUITY BETWEEN STEEL ELEMENTS SHALL BE PROVIDED BY GENERAL PURPOSE (GP) TACK WELDING OF ISOLATED ELEMENTS

Provision of Electrical Continuity

Continuity of Bridge Deck Elements

- requirements for complete bridge structure may be more complicated

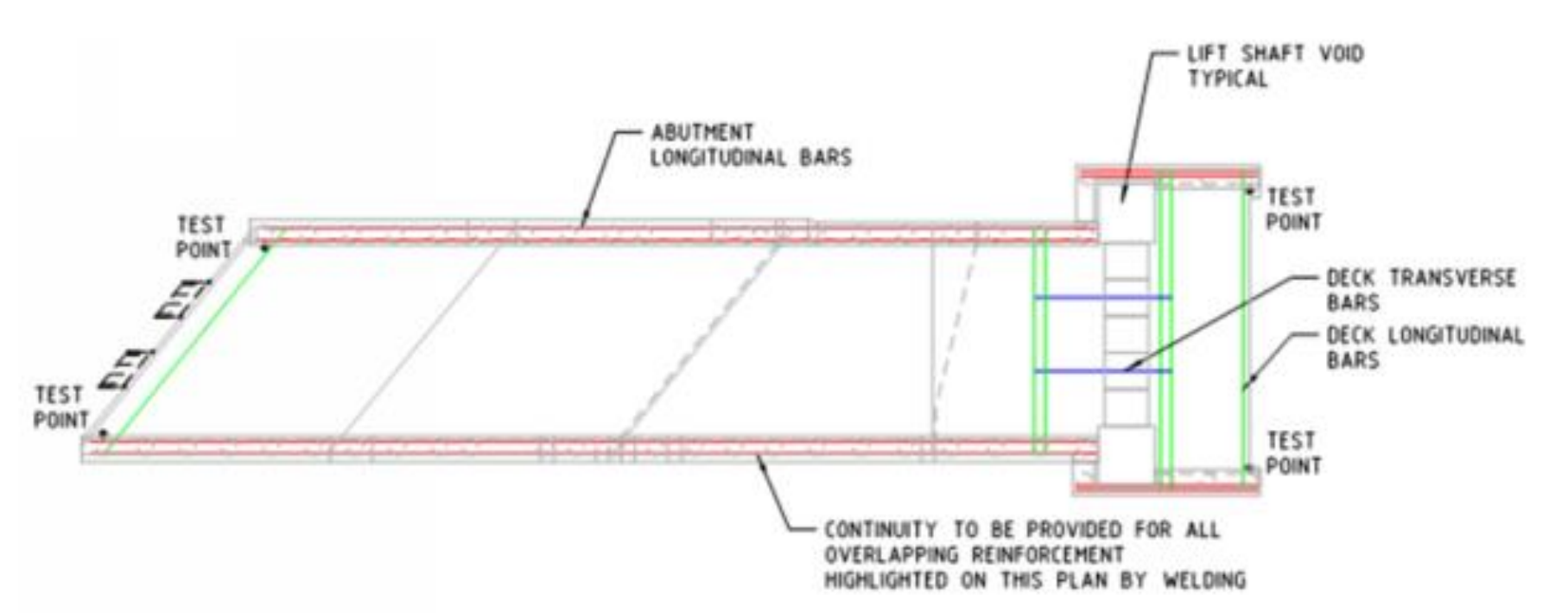

Provision of Electrical Continuity

Continuity of Superstructure Elements

- abutment reinforcement made longitudinally continuous and continuous with pile reinforcement
- Abutments joined using transverse deck reinforcement
- each separate portion of deck (made continuous through transverse deck reinforcement

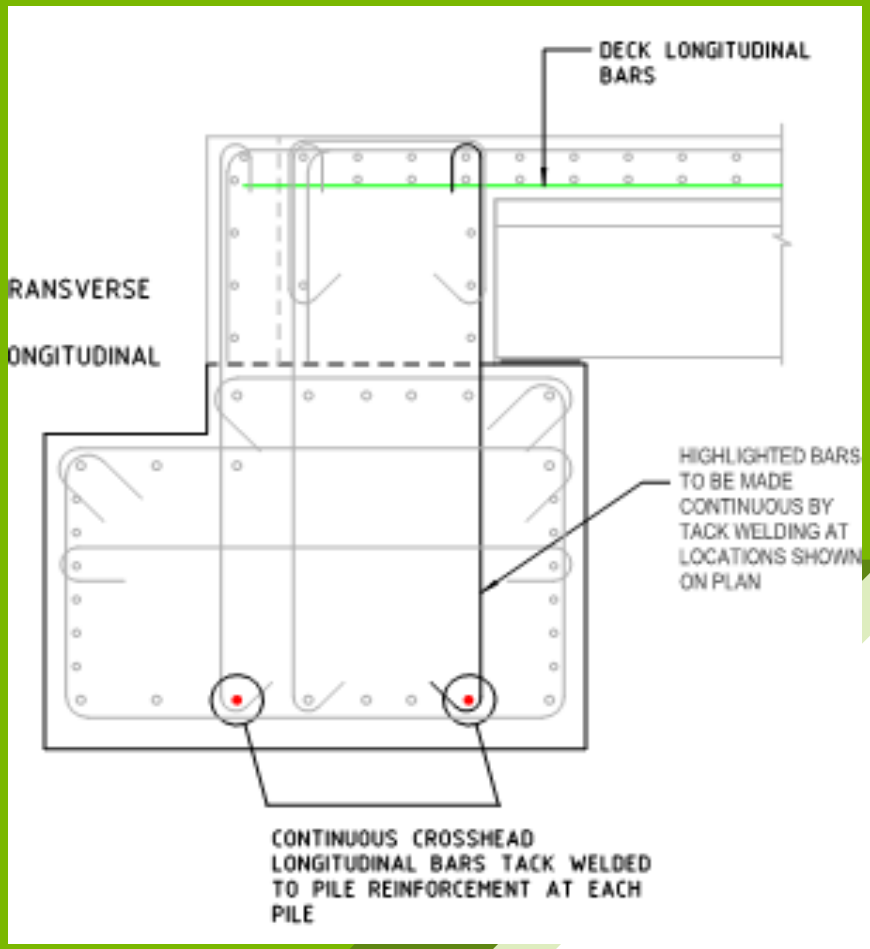

Bringing ideas to life

aurecon

Bringing ideas to life

Provision of Electrical Continuity

Welding Vs Tie Wiring

Use of **tie wire** (including double tying) for continuity purposes is typically no longer accepted by the relevant rail authorities.

Tack Welds do not need to meet AS 1554.3 requirements

Minimum of 2 No. welds should be provided where continuity required

aurecon

Testing

Testing

- Electrical resistance testing required by rail authorities

- Test points provide electrical connections to the reinforcement

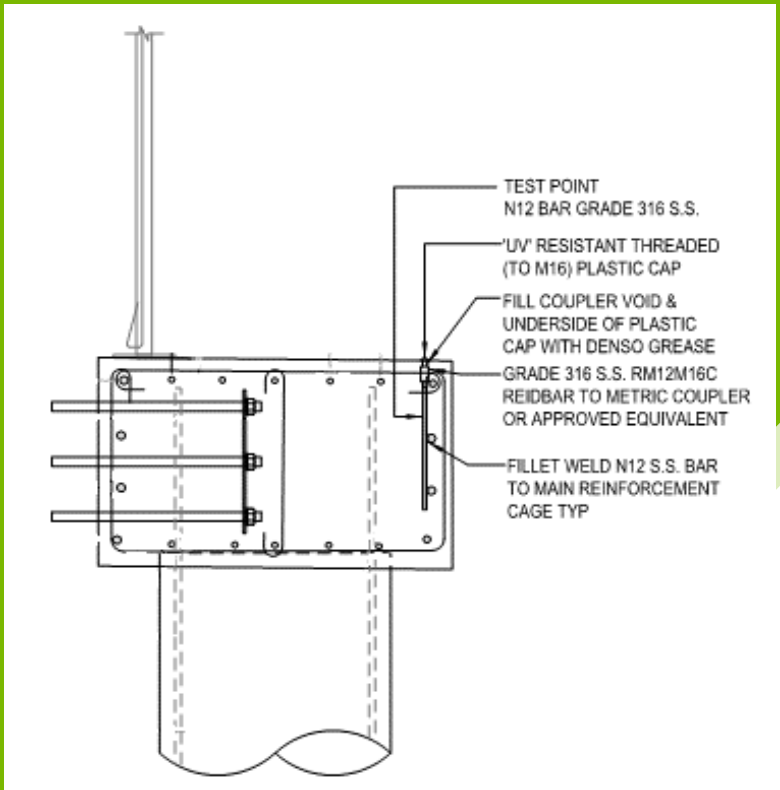

Test points provided at locations to validate the presumed continuity / segregation strategy, such as the following locations:

- Either side of movement joints and within continuous sections

Testing

- Test points typically consist of a threaded stainless steel ferrule cast into the concrete

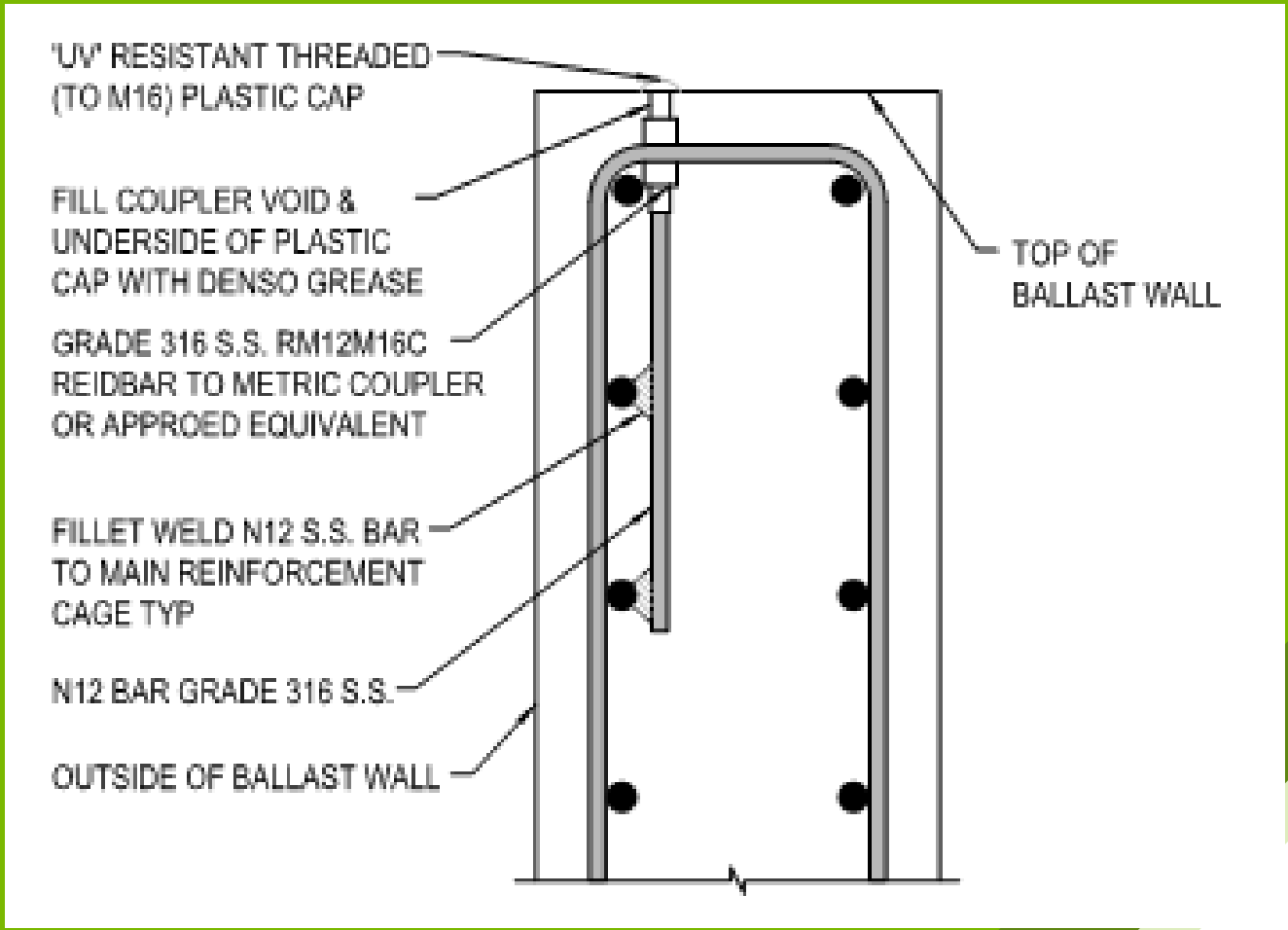

Conclusion and Recommendations

Conclusion

- The consideration of stray currents vital to ensuring that the structure can achieve its design life with minimal maintenance requirements.
- several potential mitigation measures available to designers and asset owners
- The chosen measures must be agreed by all parties as early as possible

Recommendations

- Seek professional advice from material technology experts in the field
- Stray current strategy must be aligned with the earthing and bonding strategy
- The mitigation measures must be clearly documented to facilitate the review and approval of the measures and to provide clear instruction to the Construction Team.
- Typical treatment measures and details should be developed by local authorities and asset owners.

Thank You

Bringing ideas to life

Follow us on
www.twitter.com/Aurecon

Join us on
www.facebook.com/Aurecon

Watch us on
www.youtube.com/user/AureconGroup

Follow us on
www.instagram.com/Aurecon

Follow us on
www.linkedin.com/company/Aurecon

Follow us on
www.slideshare.net/Aurecon