A flexible, deterministic and highly reliable end-to-end communication network for industrial automation systems

Opportunity

The convergence of information and communications technology (ICT) and operation technology (OT) into a common infrastructure for factory floors is one of the key enablers for Industry 4.0. Previously independent machines are now expected to cooperate within larger areas. Industrial field busses have been efficiently fulfilling the stringent performance requirements of OT, but they are less suited for converged networks. Moreover, this network allows e.g. a virtualization of controllers in enterprise data centers (DC) as well as AR/VR applications at the same time. Time Sensitive Networking (TSN) is being developed for that purpose, extending the Ethernet standard with real-time capabilities.

Factory layouts are expected to change from fixed setups to flexible production lines that are reconfigured on the fly. To support this, a multitude of machinery and tools will require be mobile and thus require wireless connectivity. In addition to the stringent requirements in terms of latency and reliability, the radio channel conditions inside a factory pose a challenge. The Ultra-Reliable Low Latency Communications aspect of 5G is designed with such use-cases in mind.

Breakthrough Innovations

The interconnection of thousands of devices and multiple applications with strict and diverse timing requirements can lead to unsolvable scheduling and bandwidth bottlenecks on critical links. We considerably alleviate these limitations by proposing a new architecture that partitions the schedule. We create a hierarchy with an optical backbone for a converged industrial network with a specific new frame layer. The backbone can tunnel the traffic of multiple independent TSN networks together along with possibly heavy 5G and IT traffic. It supports multiple 5G/TSN networks each with independent time/scheduling domains while removing the need for synchronization among logically unrelated devices, irrespective of their locality. Moreover, 5G traffic like ultra-reliable low-latency communication (URLLC) and massive machine type communication (mMTC) can be independently transported in parallel.

As a second breakthrough innovation the radio access part of the PoC includes various enablers for making URLLC a reality. Dedicated designs for enabling low latencies in the order of milliseconds and various measures to ensure high reliability (e.g. sophisticated retransmission techniques, multi-connectivity, receive and transmit diversity) for the radio transmission are shown.

Description

The proposed backbone is represented here by Industrial Optical Ethernet (IOE). Each IOE bit stream over one carrier wavelength is partitioned into container slots. While BE client packets are aggregated into containers that have opportunistic access to free slots, time-sensitive client packets leverage isochronous reservations of slots for dedicated port-to-port connections. Isochronous reservations provide guaranteed packet delivery and deterministic latency with negligible additional jitter in the ns range. Single packets, cyclic packet flows at any frequency, or even aperiodic packet flows are carried “as is” – provided they do not exceed the reserved capacity. The absence of timing restrictions implies that the timing on parallel reserved paths is independent of each other. The wireless segment of the PoC is represented by a set of prototype 5G URLLC radio heads distributed in the exhibition area implementing a single-frequency-network (SFN). The device connecting the controlled machine to the network is capable of exploiting receive diversity. Multi-link and retransmission further boost reliability for mission-critical traffic.

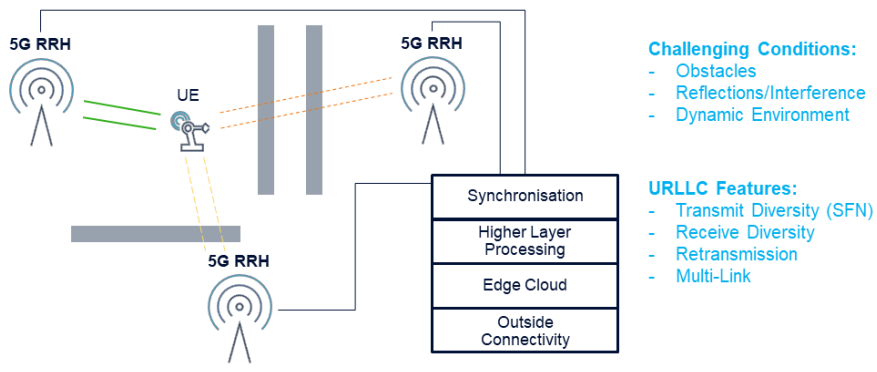

Proposed network architecture

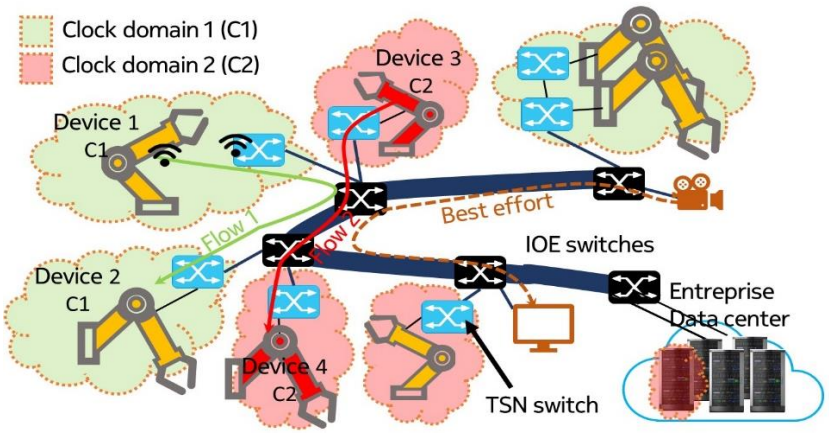

Contact

Lars.Dembeck@nokia-bell-labs.com
Frank.Schaich@nokia-bell-labs.com
Wolfram.Lautenschlaeger@nokia-bell-labs.com
Artjom.Grudnitsky@nokia-bell-labs.com

© 2019 Nokia Solutions and Networks GmbH & Co. KG - Innovation Days Stuttgart – 25.-28. November 2019