Diagnostics for Your Valuable Fiber Infrastructure

Prototyping an intelligent, system-independent fiber infrastructure management layer

Drivers

- Considerable effort to deploy, operate and manage the optical fiber infrastructure
- Today: billions of dollars for optical fiber assets not managed in an automated way

Infrastructure management solution

- Automated solution to unambiguously verify the actual fiber connectivity map
- Detect infrastructure faults and frauds
- Upgradable to host value-added functions: port-blocker, in-field OTDR, fiber switch…

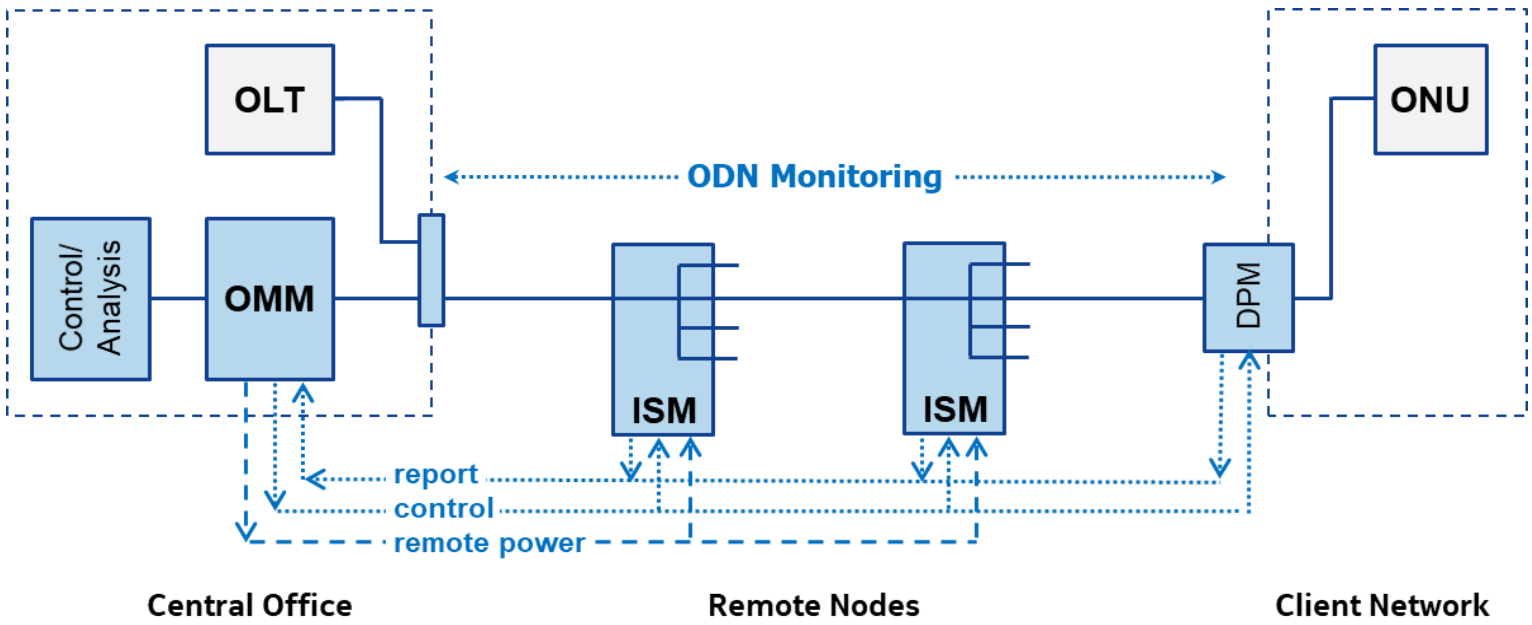

Bell Labs innovations for ODN management

- ODN Monitoring Module (OMM)
  - communication with remote devices
  - remote powering for all-passive deployments
- Intelligent Splitter Module (ISM)
  - identify/verify the actual connectivity map
- Demarcation Point Monitor (DPM)
  - separate operator ODN and home network

Joint in-service field test with "Stadtwerke Sindelfingen GmbH" in their fiber access network

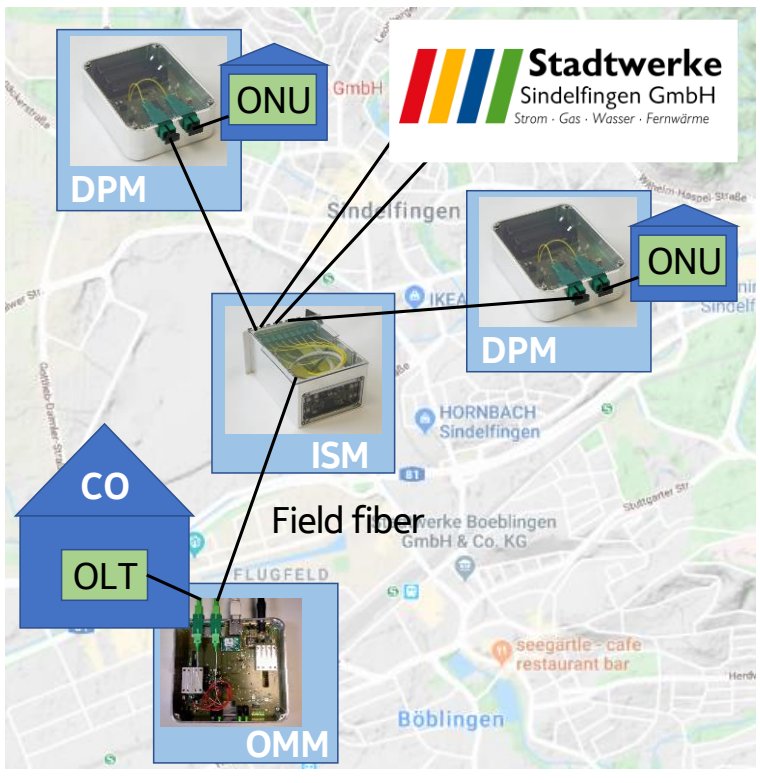

Contacts: {michael.straub, thomas.pfeiffer, rene.bonk} @nokia-bell-labs.com
Our partner: {V.Hueckstaedt, M.Metzger} @stadtwerke-sindelfingen.de

© 2019 Nokia Solutions and Networks GmbH & Co. KG - Innovation Days Stuttgart – 25. - 28. November 2019