S/Gi LAN migration strategies from physical to virtual

Raffaele D’Albenzio

Solution Architect CSP EMEA

Agenda

Mobile Networks Trends

F5 in the S/Gi LAN: The Consolidated Approach

S/Gi LAN and NFV

© 2016 F5 Networks

Mobile Networks Trends

Mobile Networks Projections

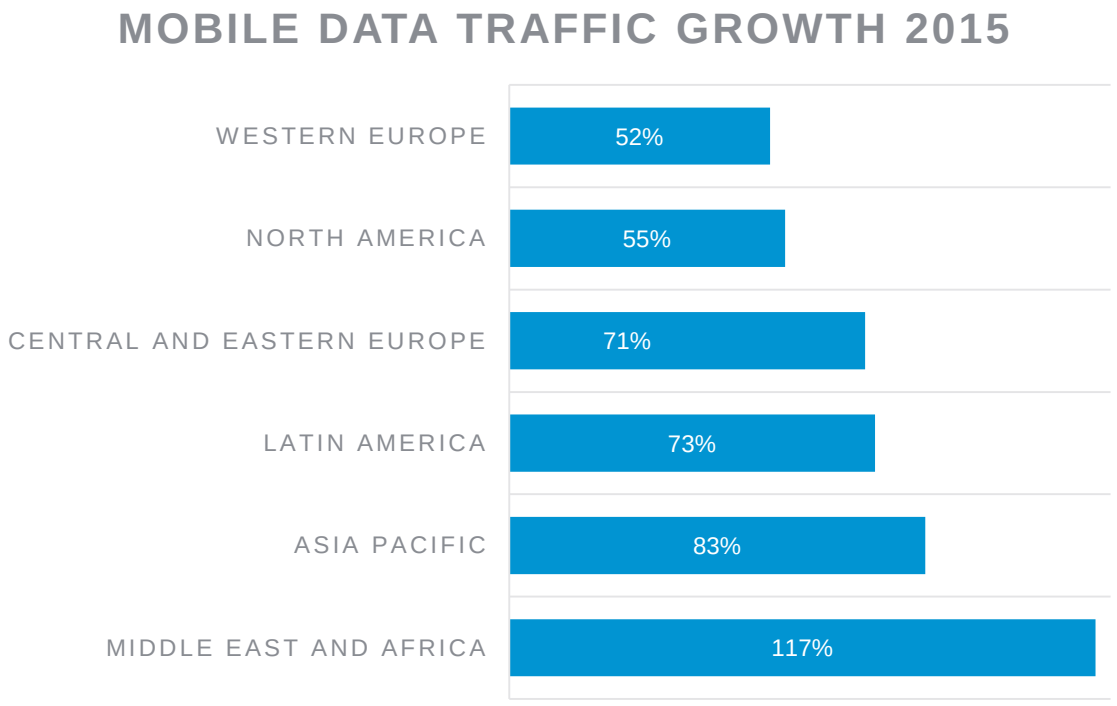

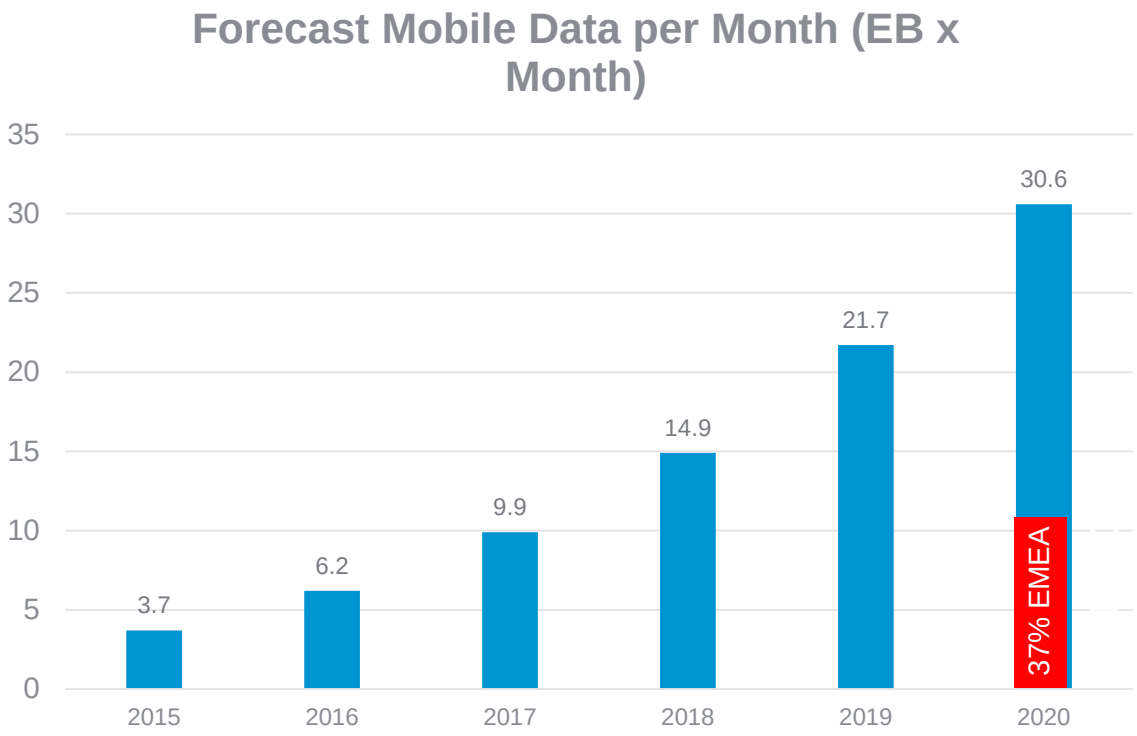

Source: Cisco VNI Mobile, 2016

© 2016 F5 Networks

Number of Devices

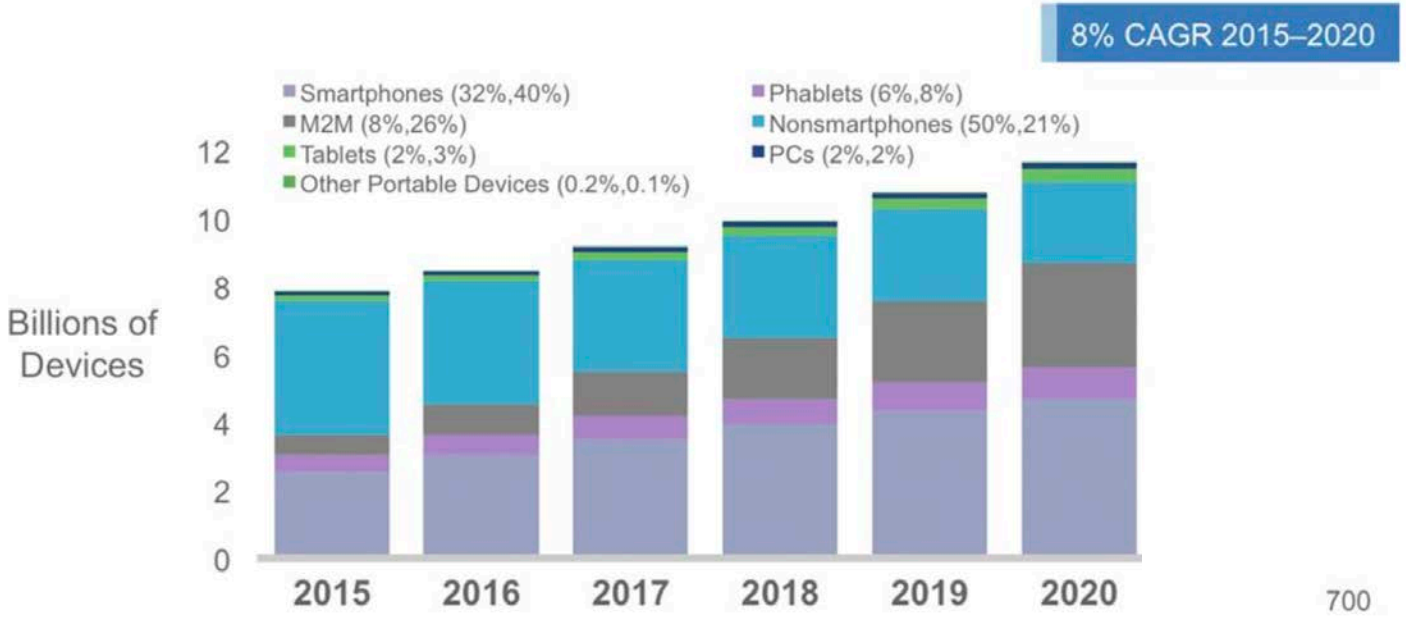

Number of Connected Devices will be more than 10 billions starting from 2018

Percentage of M2M devices will increase from 8% to 26% changing the traffic profile we see today in the mobile networks

More Services will be required

Wearable devices will grow 44% YoY

Different Devices means different services

Not only a bandwidth Problem

Service Provider Still have to monetize

Source: Cisco VNI Mobile, 2016

© 2016 F5 Networks

Last Trend in Monetization: Zero Rating

- T-Mobile started offering streaming video “for free” to maintain/increase customer basis
- Content manipulation is done leveraging on ABR technology
  - Video forced to a lower resolution
- If you want full HD video you can enable as an opt-in/opt-out service

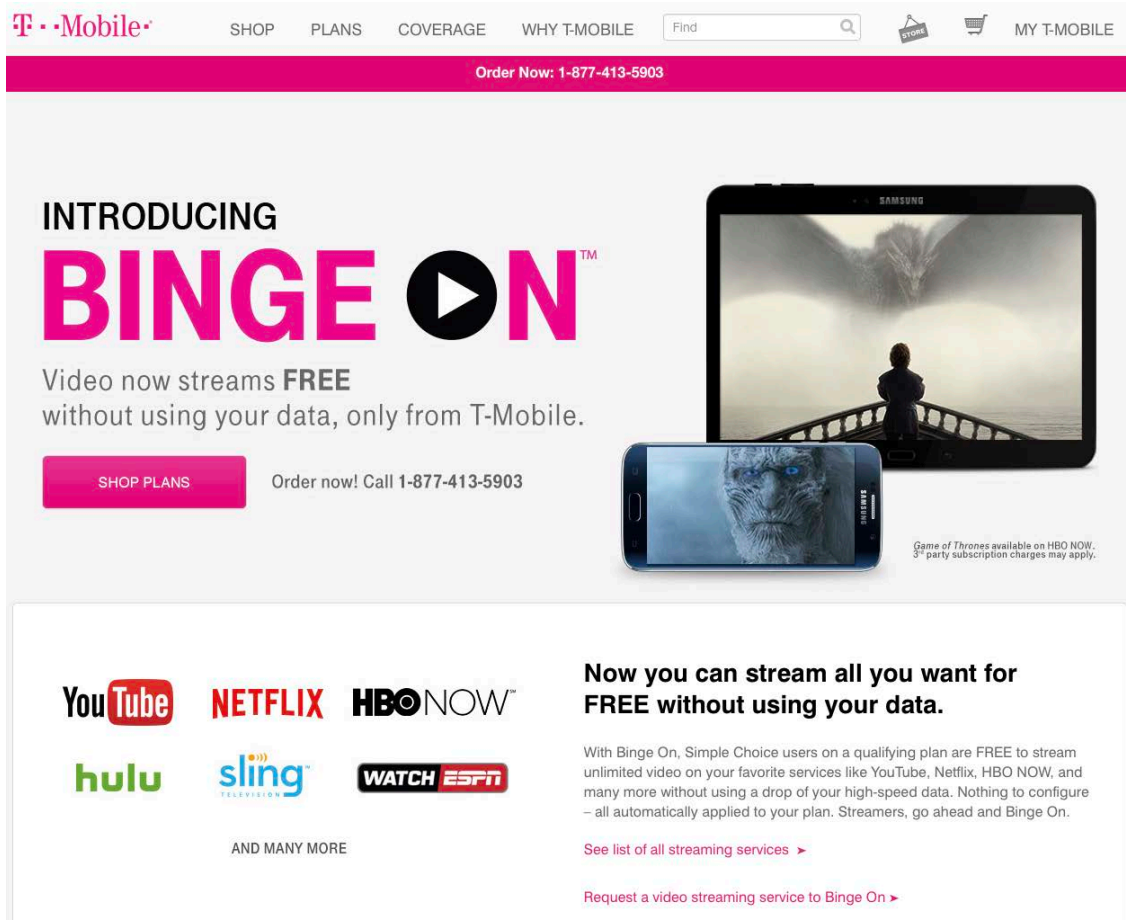

© 2016 F5 Networks

Last Trend in Monetization: Zero Rating

Unlimited use of instant messaging

Different conditions applied

In case of recharging

As an opt-in service

Different applications chosen

Airtel Offering Free MB for Face-book, Whatsapp & Youtube

© 2016 F5 Networks

… And more...

Parental Control

Network Based ad-blocking

Three Group Announces Roll-Out of Ad Blocking to 30M Consumers!

© 2016 F5 Networks

F5 in the S/Gi LAN

F5 in the S/Gi network – A Consolidated Approach

Simplifying the delivery of network services

TRADITIONAL APPROACH

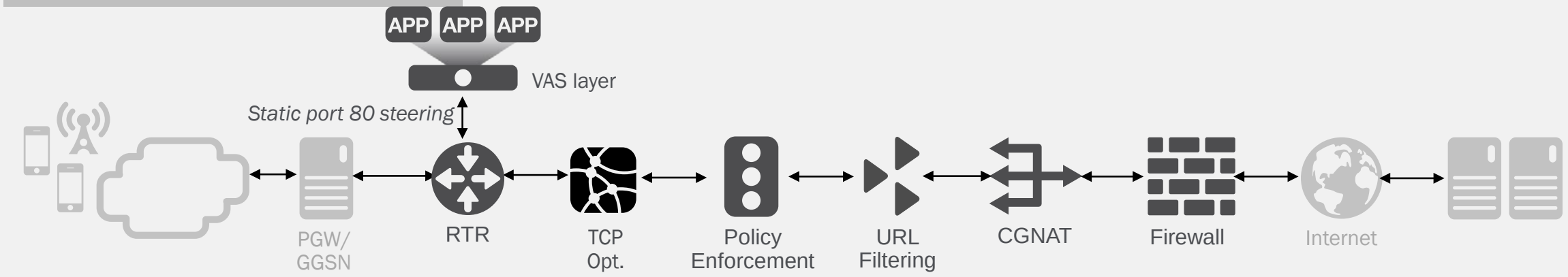

APPROACH WITH F5

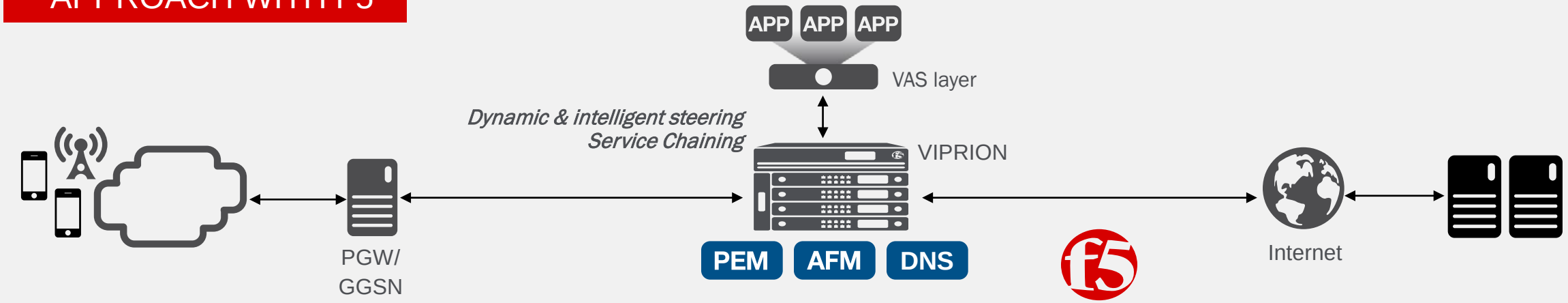

© 2016 F5 Networks

Traffic Steering and Service Chaining

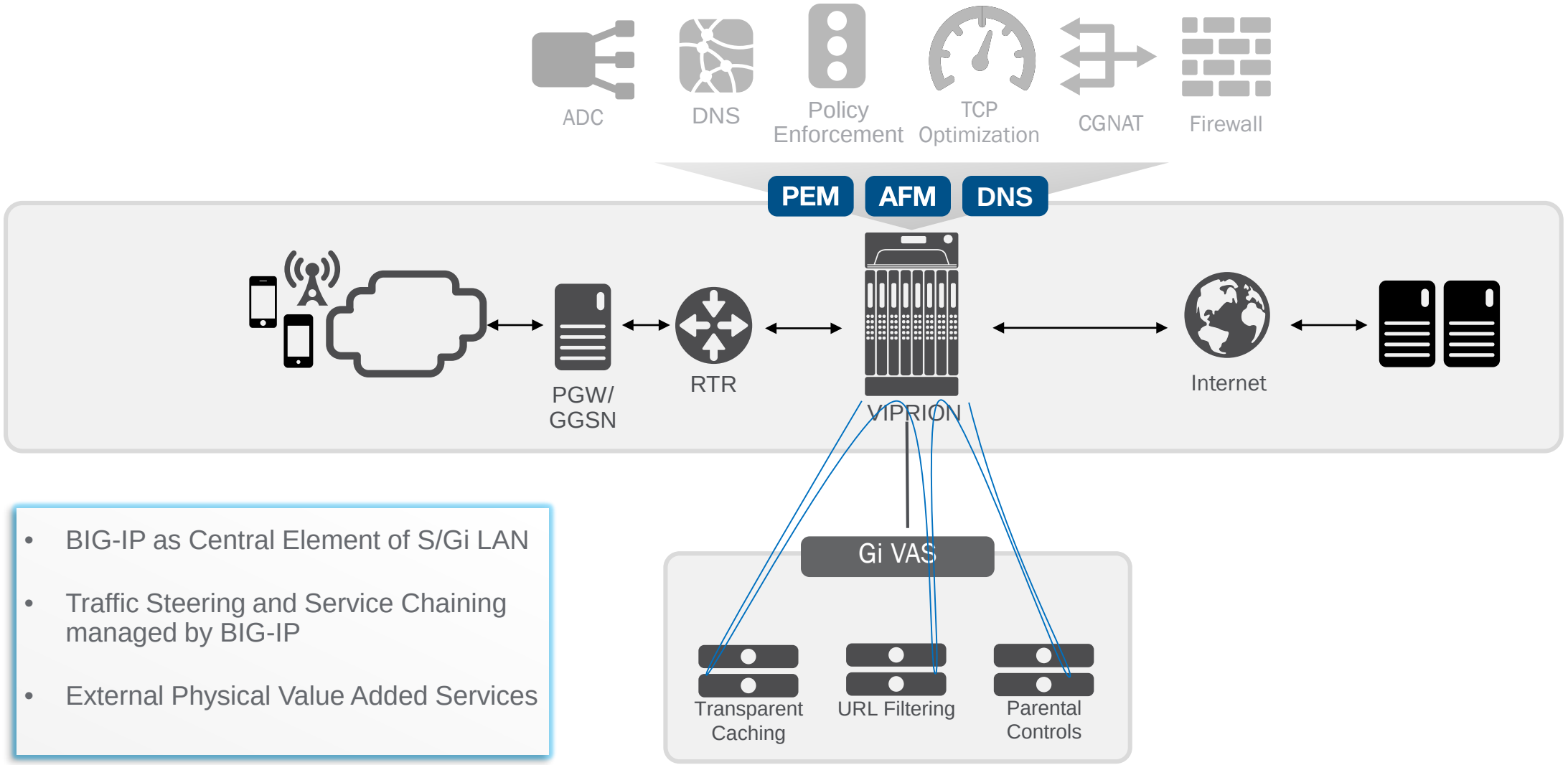

- BIG-IP as Central Element of S/Gi LAN
- Traffic Steering and Service Chaining managed by BIG-IP
- External Physical Value Added Services

© 2016 F5 Networks

Service Chaining: Main Functions

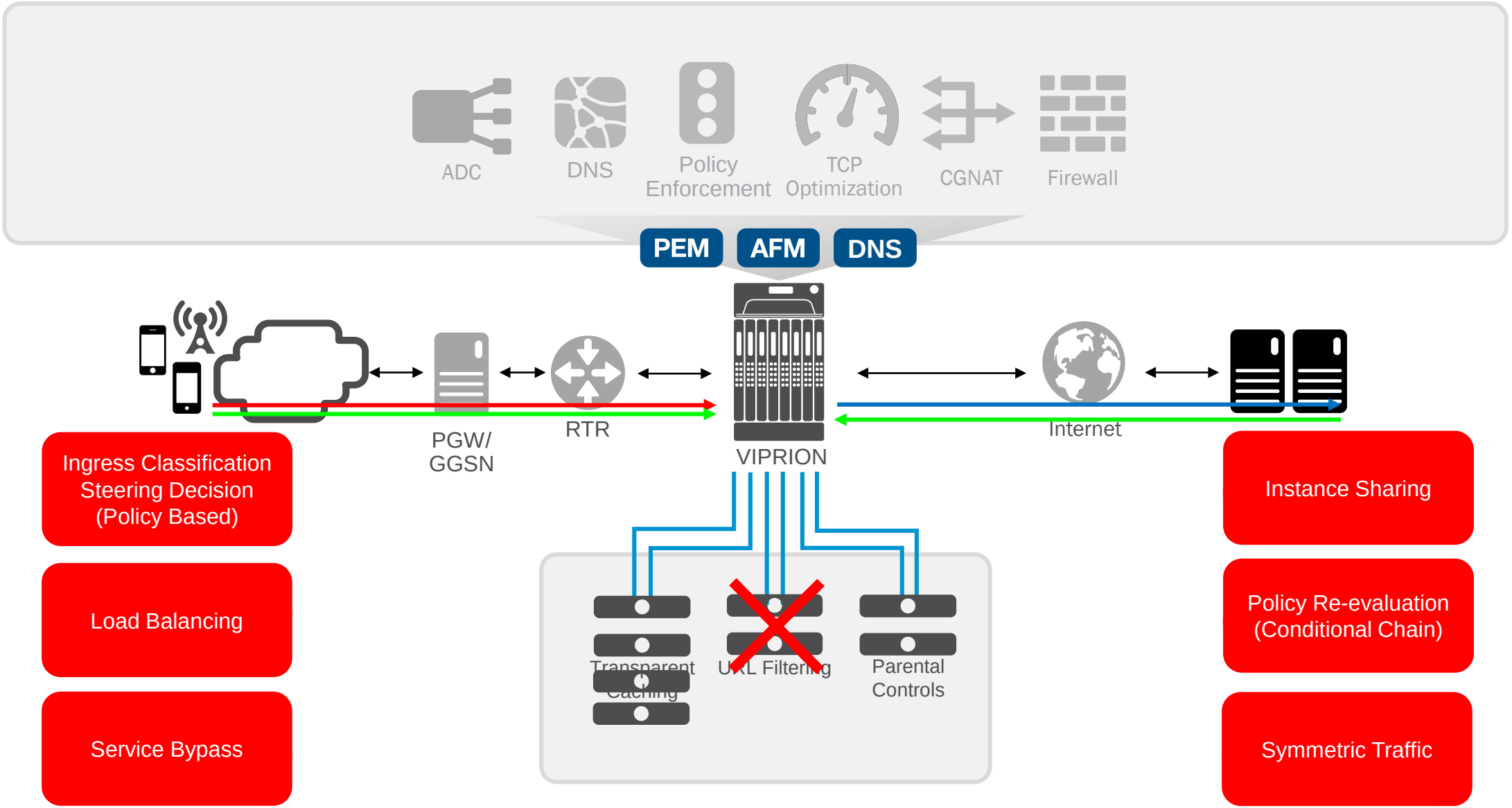

© 2016 F5 Networks

S/Gi LAN in the NFV world

Traffic Steering and Service Chaining

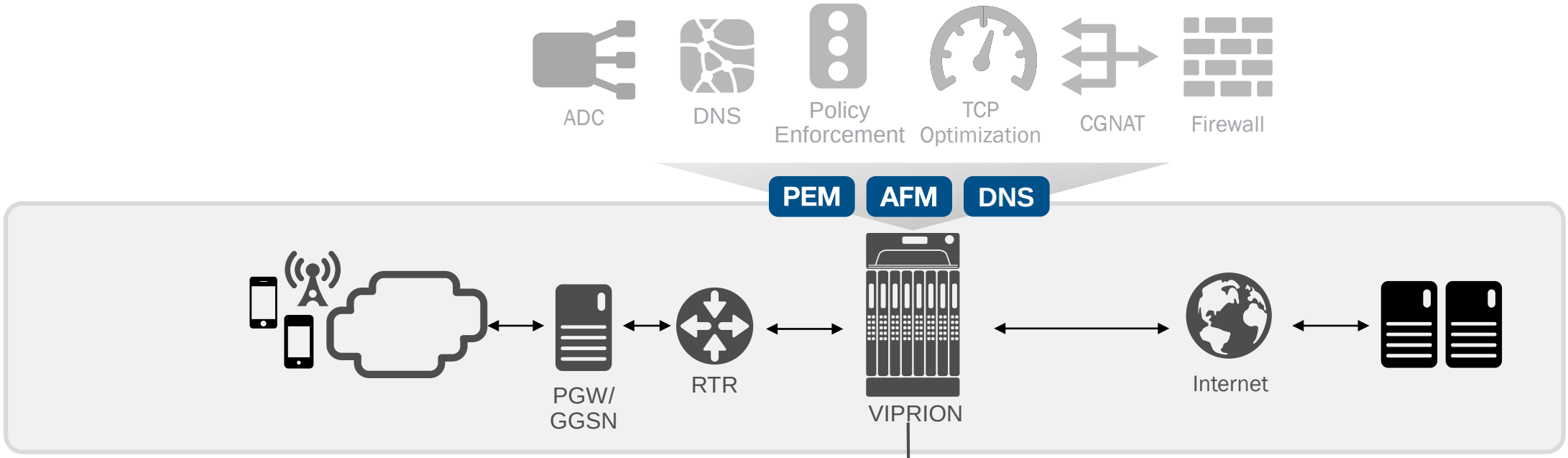

- BIG-IP as Central Element of S/Gi LAN
- Traffic Steering and Service Chaining managed by BIG-IP
- External Physical Value Added Services

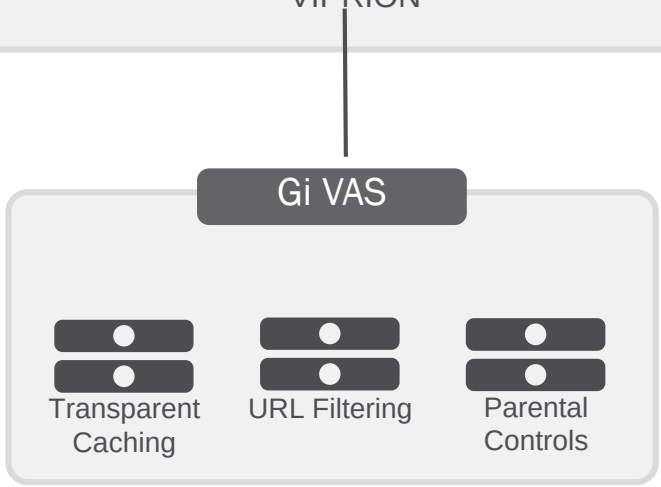

© 2016 F5 Networks

First Step: Migrating Value added Services

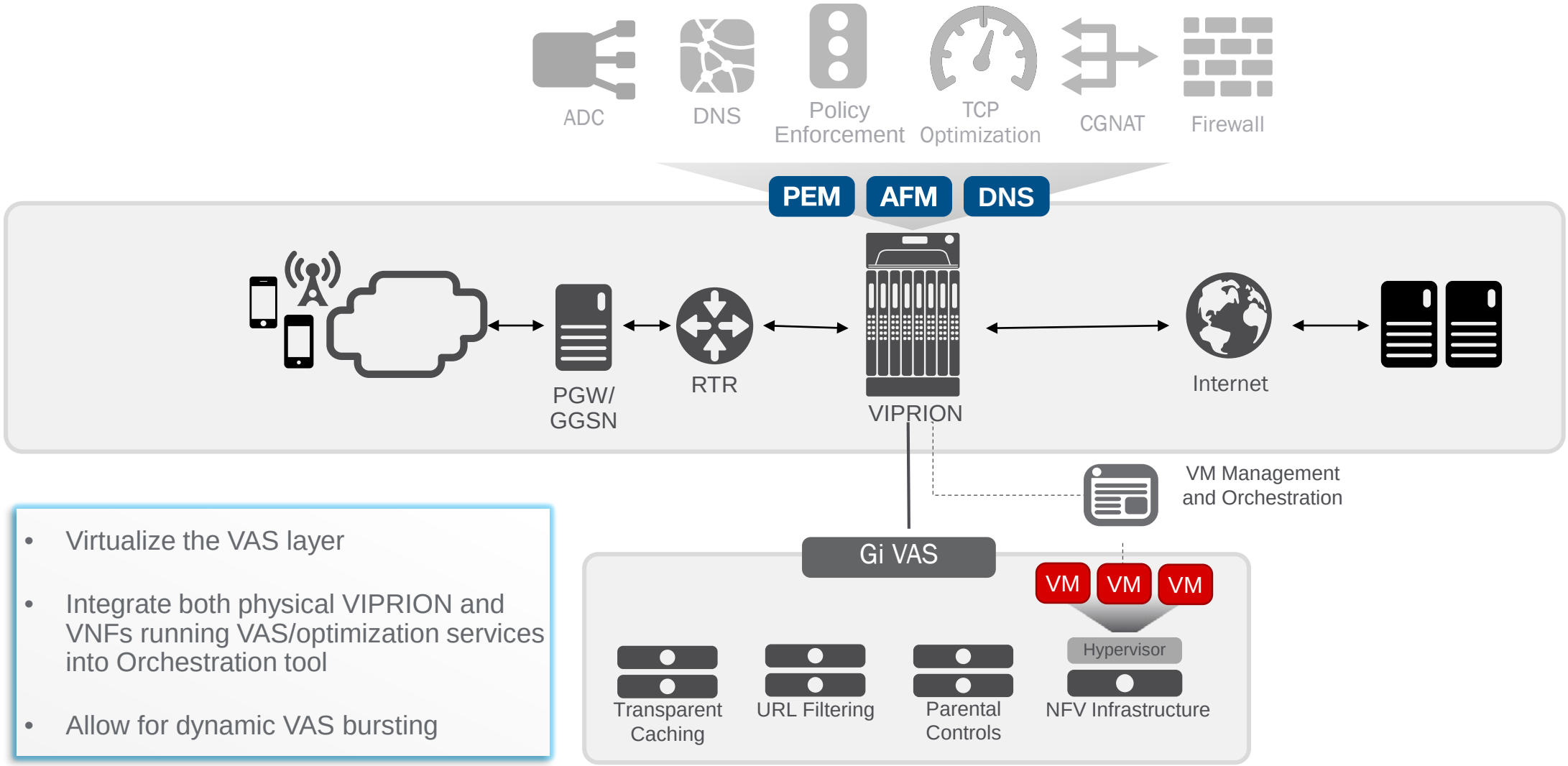

- Virtualize the VAS layer
- Integrate both physical VIPRION and VNFs running VAS/optimization services into Orchestration tool
- Allow for dynamic VAS bursting

© 2016 F5 Networks

New Service Chaining Model?

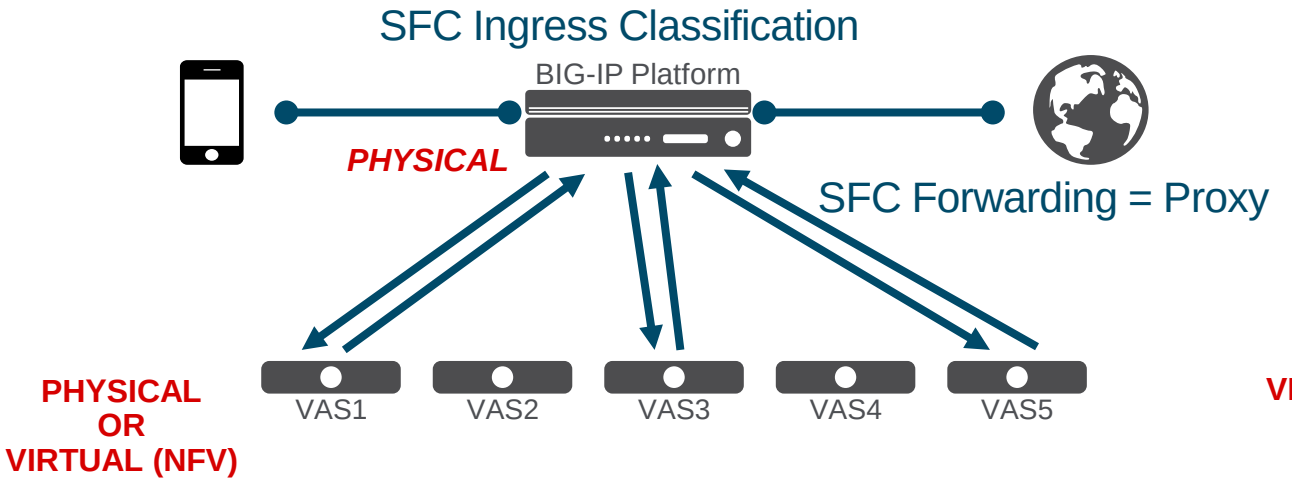

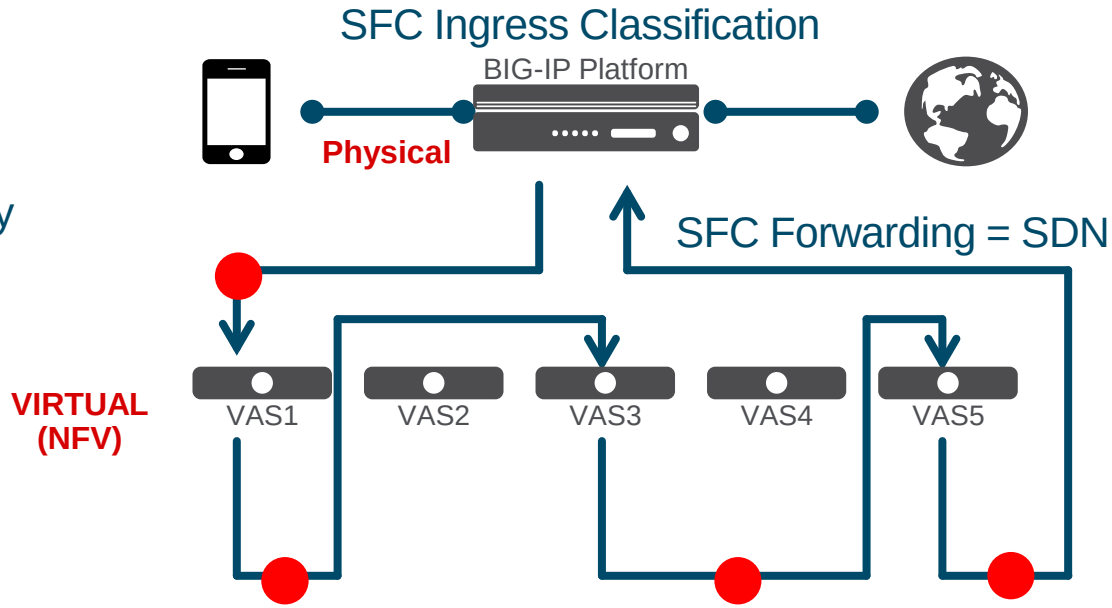

- Service Function Classifier
- Load Balancing (Scale out)
- Service Bypass
- Service Instance Sharing
- Policy Re-evaluation/Conditional Chains
- Symmetric Traffic (Open/Closed Chains?)

© 2016 F5 Networks

Service Function Classifier

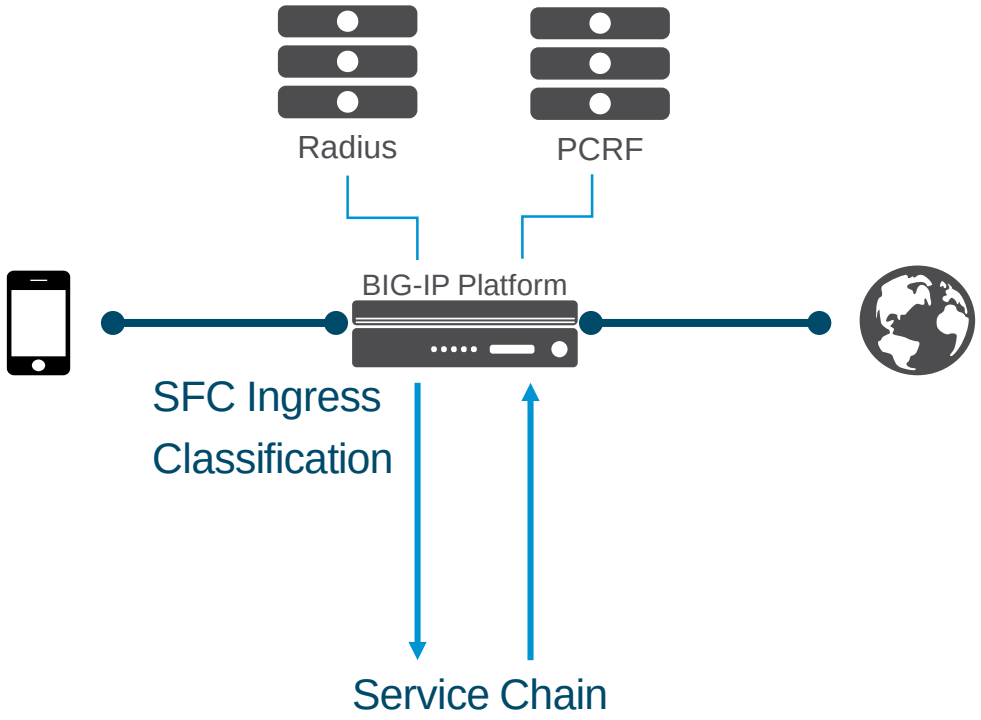

Policy Based Classification

Gx/Diameter Interface
Rest API
iRules
ODL/Openflow based

Encapsulated Traffic

VLAN
DSCP Marking
VXLAN
Network Service Header

SDN Based Approach

OVSDB for Endpoint Configuration

Orchestration

Rest API

© 2016 F5 Networks

Scale Out

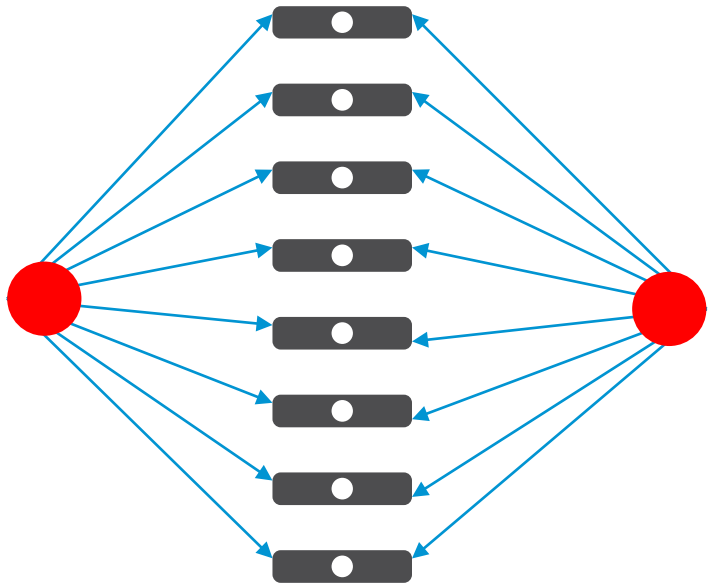

Symmetric

Flow to be sent to the same Service Instance

Traffic distribution

Per Flow

Per Subscriber

Different Criteria per different protocols

e.g. Control vs Data Plane

Monitors

Running on the Scale Out Function

Controlled by NFV-I

© 2016 F5 Networks

Option 1: SDN Based Scale Out

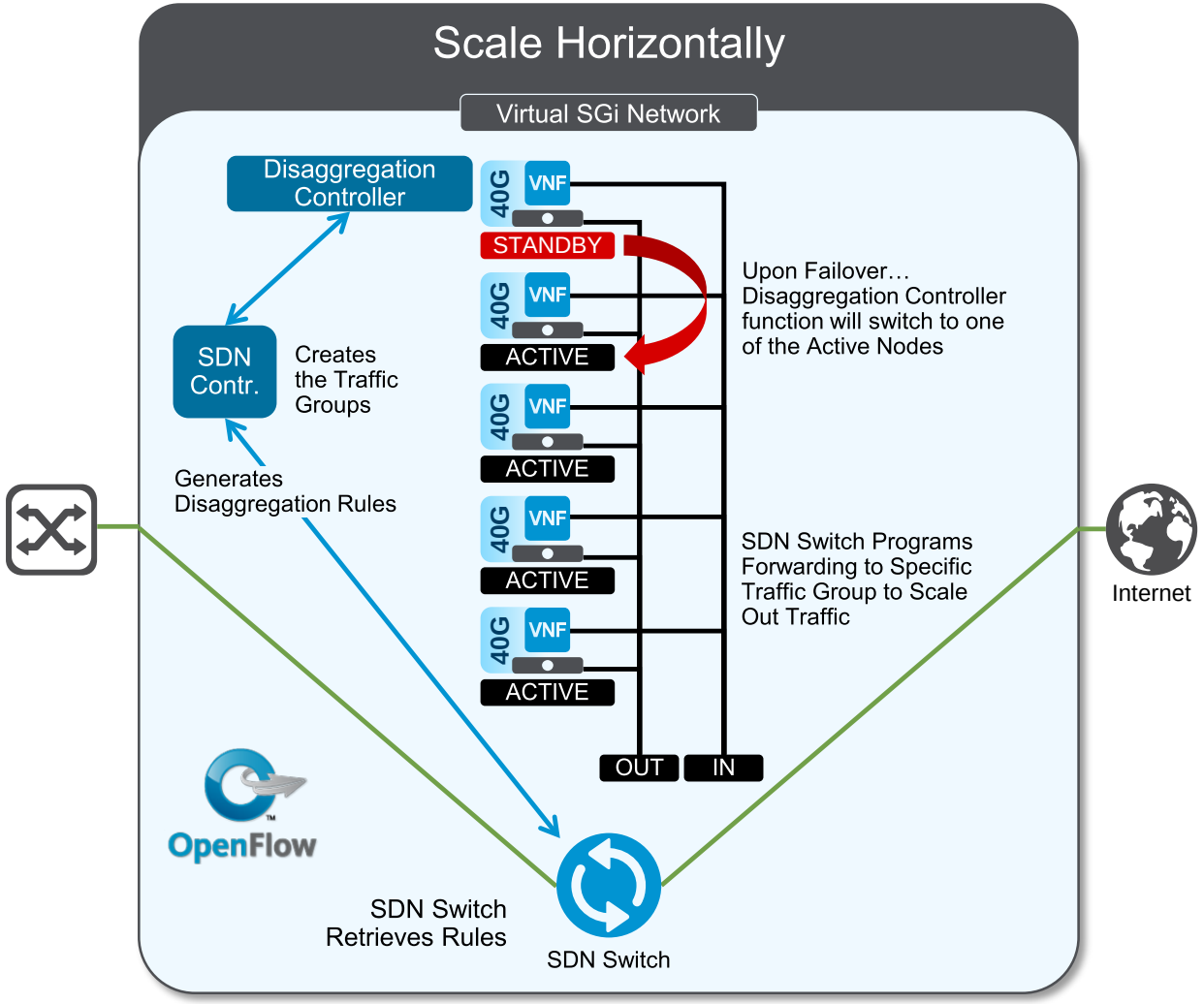

SDN Based Scale Out

”Flow” Based

Symmetric

Scale In/Out managed via SDN

Any SDN Switch (Including OVS)

SDN Controller on the VNF itself?

https://devcentral.f5.com/articles/horizontal-scale-big-ip-device-service-cluster-dsc-with-software-defined-networking-sdn-enabled-hardware

© 2016 F5 Networks

Option 2: “LBaaS” for NFV and Service Chaining

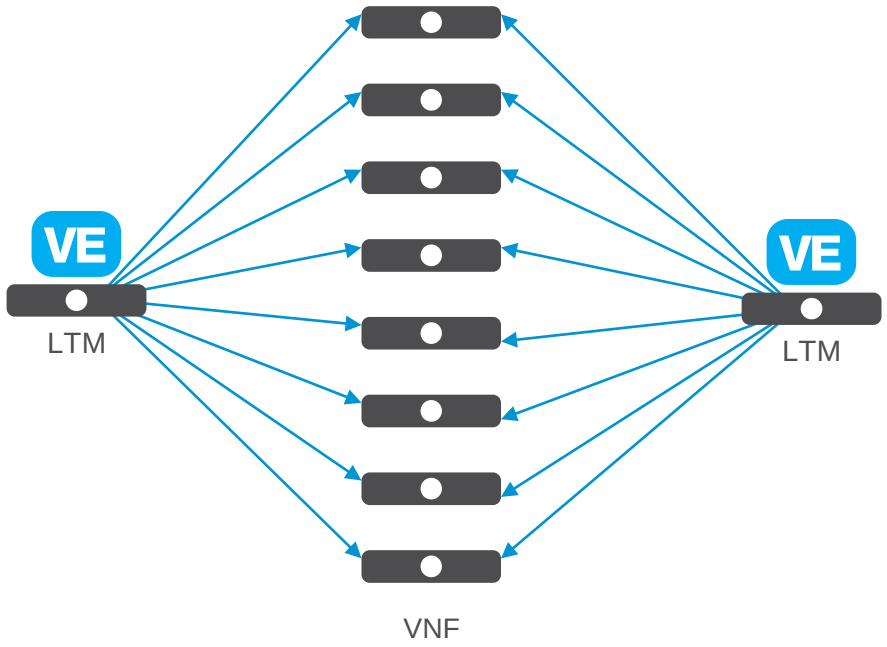

F5 as “LBaaS” for NFV

Physical or Virtual

Can easily satisfy LB requirements

Persistency

Symmetry

Monitors

Scale In/Out

What if the “LBaaS hast to Scale out?

Stateless Algorithm would be the best option

We’ll see in the next slides

© 2016 F5 Networks

Instance Sharing

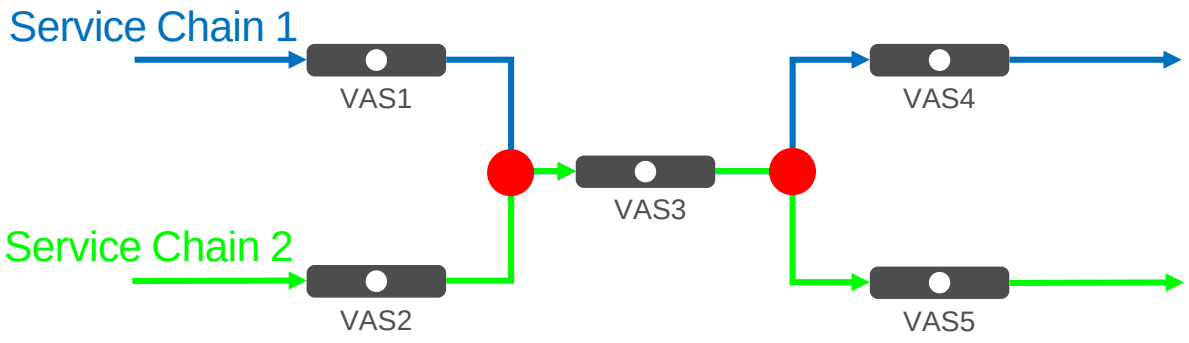

VLAN based

Requires VLAN support on VAS

Different “Virtual Routing Tables”

Network Service Header

Defined by IETF

No VAS specific requirements

SFC Proxy function

© 2016 F5 Networks

NSH Header – MD-Type = 0x1 (Fixed Context Header)

```
 0 1 2 3 4 5 6 7 8 9 0 1 2 3 4 5 6 7 8 9 0 1 2 3 4 5 6 7 8 9 0 1
+-+-+-+-+-+-+-+-+-+-+-+-+-+-+-+-+-+-+-+-+-+-+-+-+-+-+-+-+-+-+-+-+
|Ver|O|C|R|R|R|R|R|   Length  |  MD-type=0x1  | Next Protocol |
+-+-+-+-+-+-+-+-+-+-+-+-+-+-+-+-+-+-+-+-+-+-+-+-+-+-+-+-+-+-+-+-+
|          Service Path ID                      | Service Index |
+-+-+-+-+-+-+-+-+-+-+-+-+-+-+-+-+-+-+-+-+-+-+-+-+-+-+-+-+-+-+-+-+
|                Mandatory Context Header                       |
+-+-+-+-+-+-+-+-+-+-+-+-+-+-+-+-+-+-+-+-+-+-+-+-+-+-+-+-+-+-+-+-+
|                Mandatory Context Header                       |
+-+-+-+-+-+-+-+-+-+-+-+-+-+-+-+-+-+-+-+-+-+-+-+-+-+-+-+-+-+-+-+-+
|                Mandatory Context Header                       |
+-+-+-+-+-+-+-+-+-+-+-+-+-+-+-+-+-+-+-+-+-+-+-+-+-+-+-+-+-+-+-+-+
|                Mandatory Context Header                       |
+-+-+-+-+-+-+-+-+-+-+-+-+-+-+-+-+-+-+-+-+-+-+-+-+-+-+-+-+-+-+-+-+
```

Next Protocol : IPv4, IPv6 or Ethernet

Service Path ID : identifies a service path. Participating nodes MUST use this identifier for Service Function Path selection.

Service Index : provides location within the SFP. The first classifier (i.e. at the boundary of the NSH domain)in the NSH Service Function Path, SHOULD set the SI to 255, however the control plane MAY configure the initial value of SI as appropriate (i.e. taking into account the length of the service function path). Service index MUST be decremented by service functions or proxy nodes after performing required services and the new decremented SI value MUST be reflected in the egress NSH packet.

© 2016 F5 Networks

Instance Sharing with Network Service Header

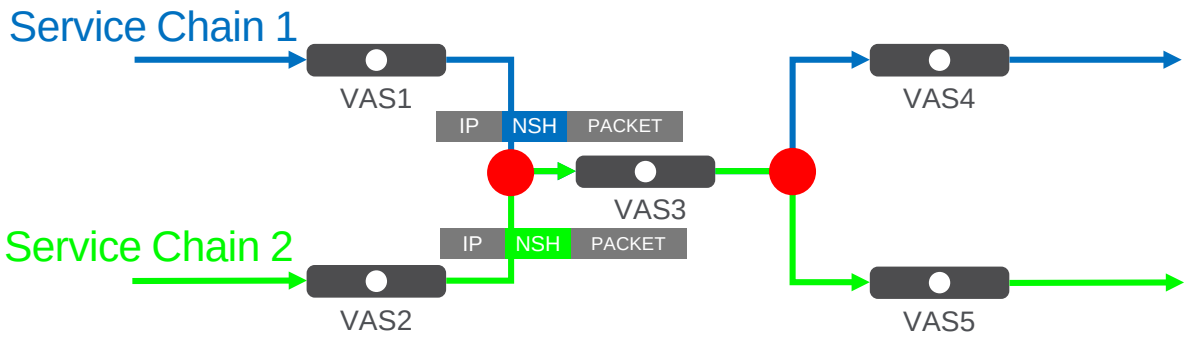

Forwarding Function

NSH Based Fowarding

SFC Proxy

NSH Removal/Insertion

© 2016 F5 Networks

Conditional Chains (Policy Re-evaluation)

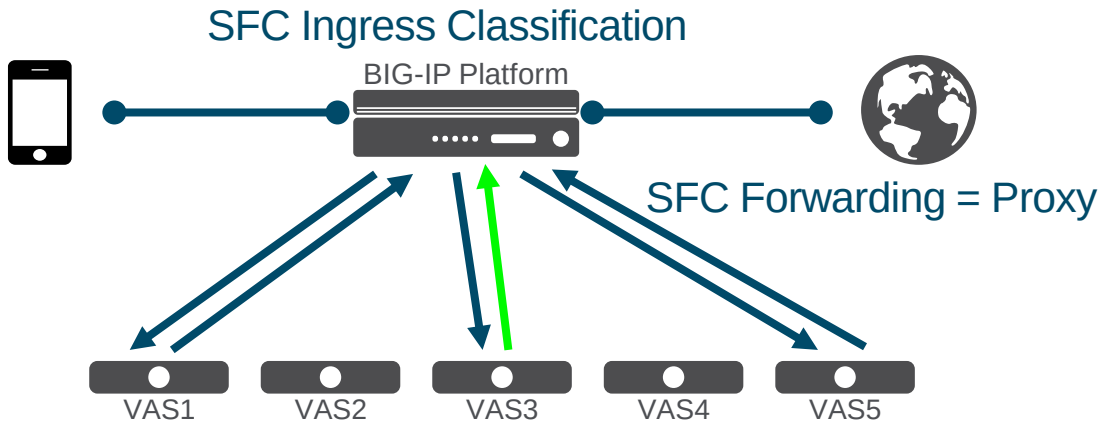

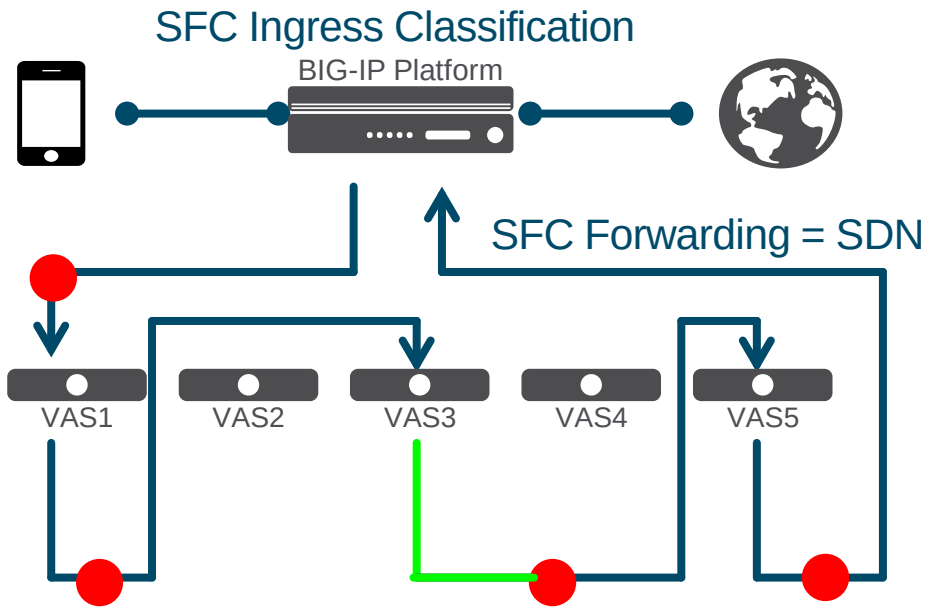

Layer 3/4 matching changed

New Src IP/Port

New DSCP Code

Layer 7 matching changed

HTTP Header added

HTTP Header changed

SSL “Air Gap”

Network Service Header

Context Header Changing

© 2016 F5 Networks

NSH Header – MD-Type = 0x1 (Fixed Context Header)

```
 0 1 2 3 4 5 6 7 8 9 0 1 2 3 4 5 6 7 8 9 0 1 2 3 4 5 6 7 8 9 0 1
+-+-+-+-+-+-+-+-+-+-+-+-+-+-+-+-+-+-+-+-+-+-+-+-+-+-+-+-+-+-+-+-+
|Ver|O|C|R|R|R|R|R|   Length  |  MD-type=0x1  | Next Protocol |
+-+-+-+-+-+-+-+-+-+-+-+-+-+-+-+-+-+-+-+-+-+-+-+-+-+-+-+-+-+-+-+-+
|          Service Path ID                      | Service Index |
+-+-+-+-+-+-+-+-+-+-+-+-+-+-+-+-+-+-+-+-+-+-+-+-+-+-+-+-+-+-+-+-+
|                Mandatory Context Header                       |
+-+-+-+-+-+-+-+-+-+-+-+-+-+-+-+-+-+-+-+-+-+-+-+-+-+-+-+-+-+-+-+-+
|                Mandatory Context Header                       |
+-+-+-+-+-+-+-+-+-+-+-+-+-+-+-+-+-+-+-+-+-+-+-+-+-+-+-+-+-+-+-+-+
|                Mandatory Context Header                       |
+-+-+-+-+-+-+-+-+-+-+-+-+-+-+-+-+-+-+-+-+-+-+-+-+-+-+-+-+-+-+-+-+
|                Mandatory Context Header                       |
+-+-+-+-+-+-+-+-+-+-+-+-+-+-+-+-+-+-+-+-+-+-+-+-+-+-+-+-+-+-+-+-+
```

Next Protocol : IPv4, IPv6 or Ethernet

Service Path ID : identifies a service path. Participating nodes MUST use this identifier for Service Function Path selection.

Service Index : provides location within the SFP. The first classifier (i.e. at the boundary of the NSH domain)in the NSH Service Function Path, SHOULD set the SI to 255, however the control plane MAY configure the initial value of SI as appropriate (i.e. taking into account the length of the service function path). Service index MUST be decremented by service functions or proxy nodes after performing required services and the new decremented SI value MUST be reflected in the egress NSH packet.

© 2016 F5 Networks

A possible Intermediate Solution

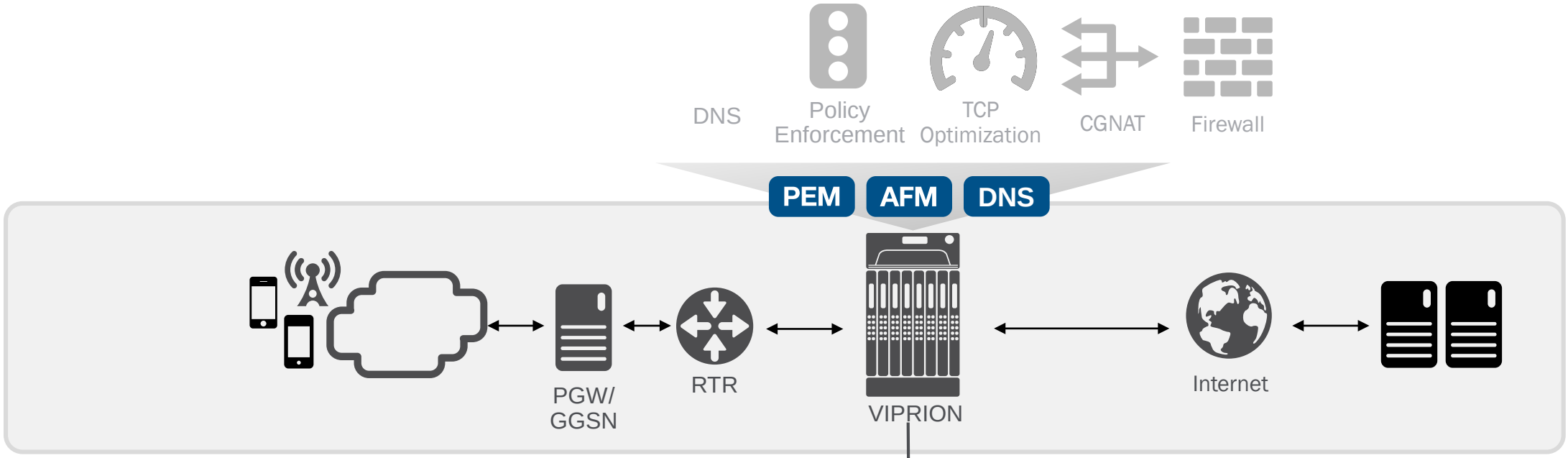

- BIG-IP as Central Element of S/Gi LAN
- Traffic Steering and Service Chaining managed by BIG-IP
- External Physical Value Added Services

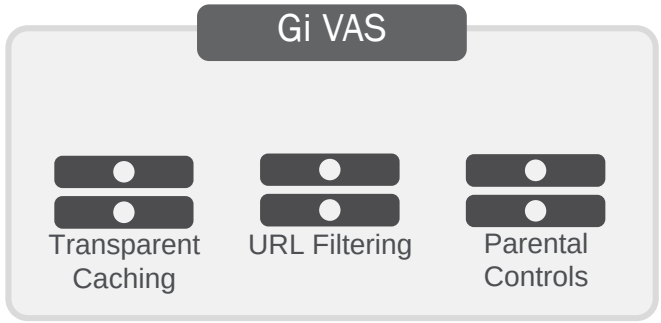

© 2016 F5 Networks

First Step of Migration: NSH Based Service Chaining

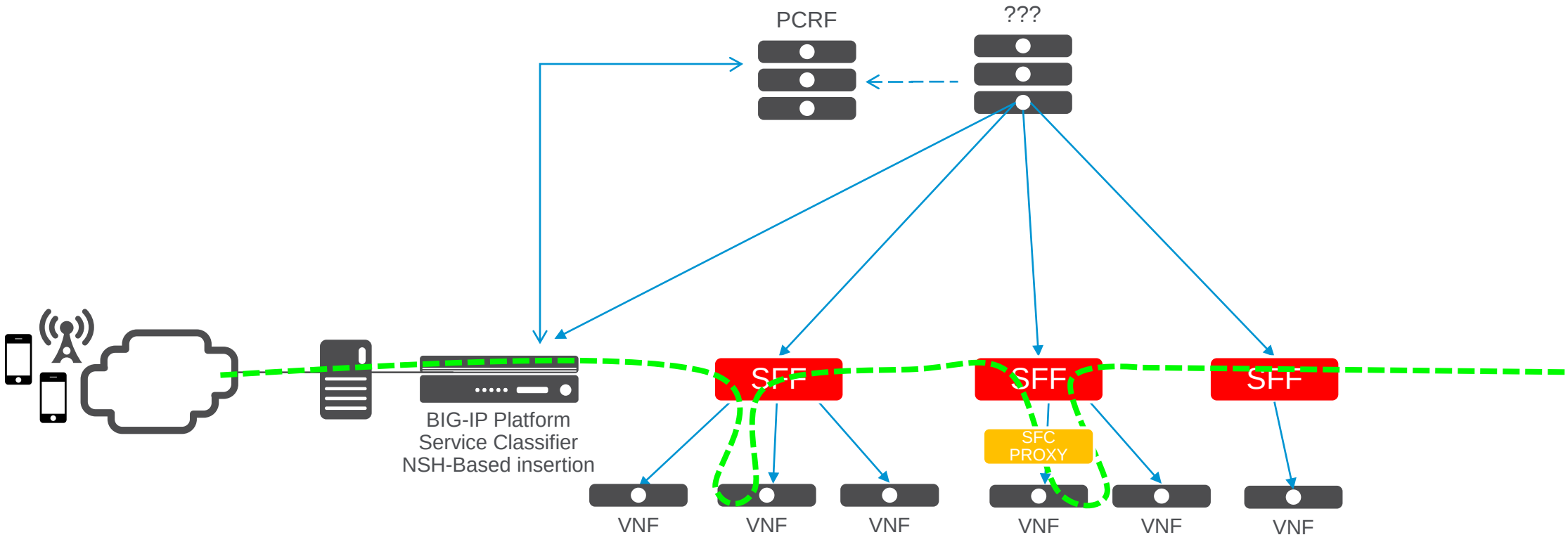

- Policy Based Model
- NSH Based Insertion supports features of Proxy based model
  - Scale Out, Instance Sharing, Symmetric Traffic, Conditional Chaining

Intel/F5 Demo @ MWC (100G VE)

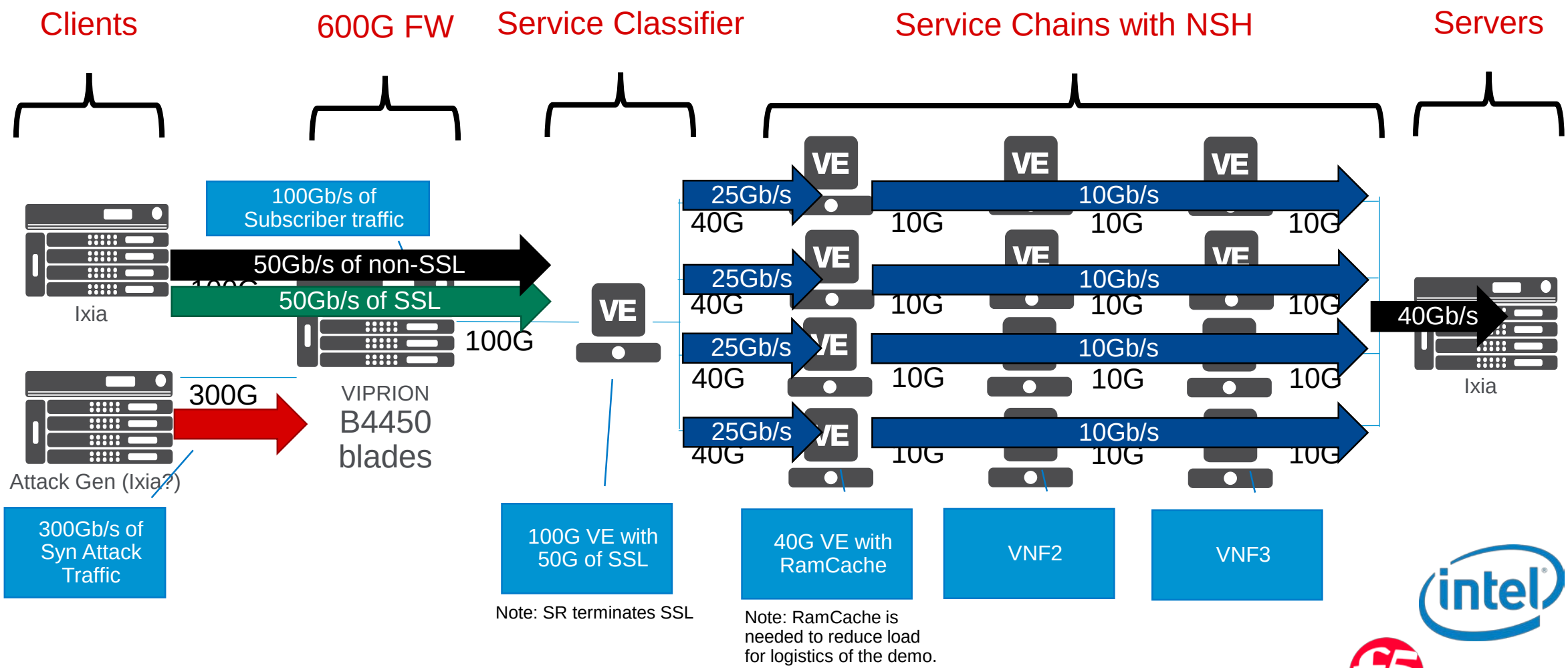

Virtual Gi-LAN – Full NFV Deployment

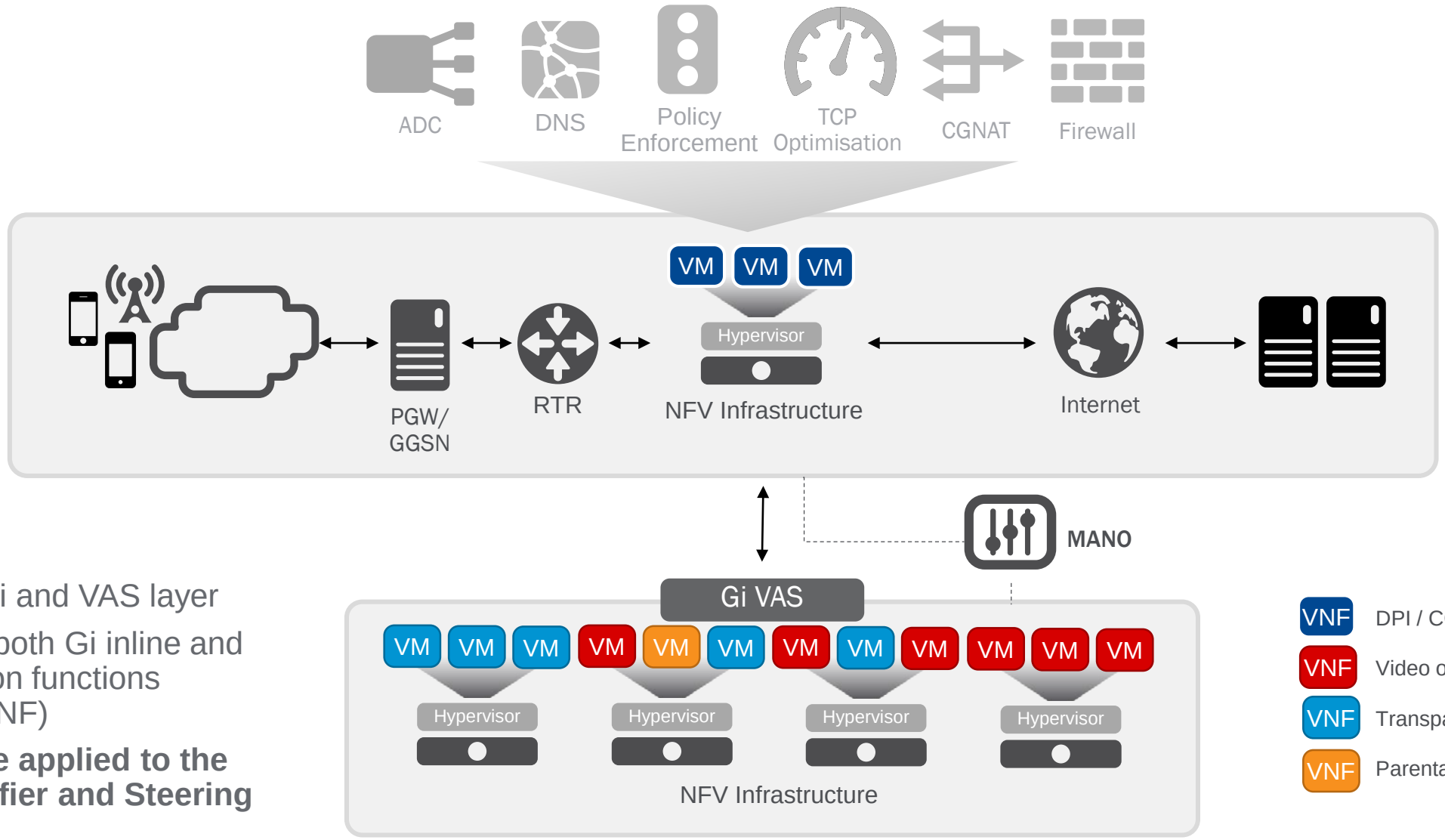

- Virtualise the Gi and VAS layer
- Fully virtualise both Gi inline and VAS/optimisation functions (deployed as VNF)
- **Scale out to be applied to the Service Classifier and Steering Function**

“LBaaS” for NFV and Steering Function

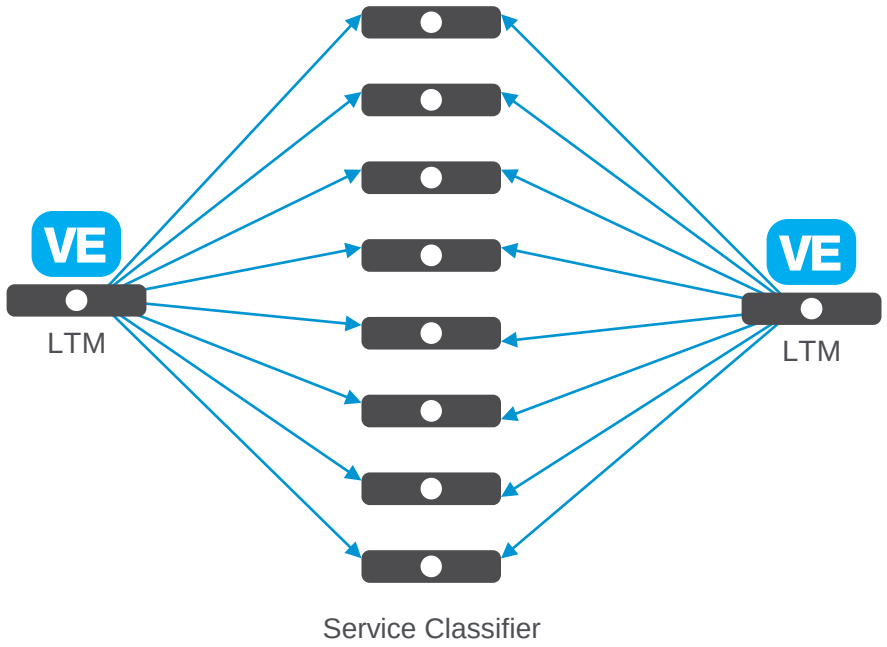

F5 as “LBaaS” for NFV

Same functional requirements as VNFs

Source IP Based Load Balancing

Slice Based Concept makes the architecture simpler

Load Balancing Function has to scale out now

Due to the amount of traffic managed by the service classifier.

© 2016 F5 Networks

Virtual Gi LAN – Full NFV Deployment (example)

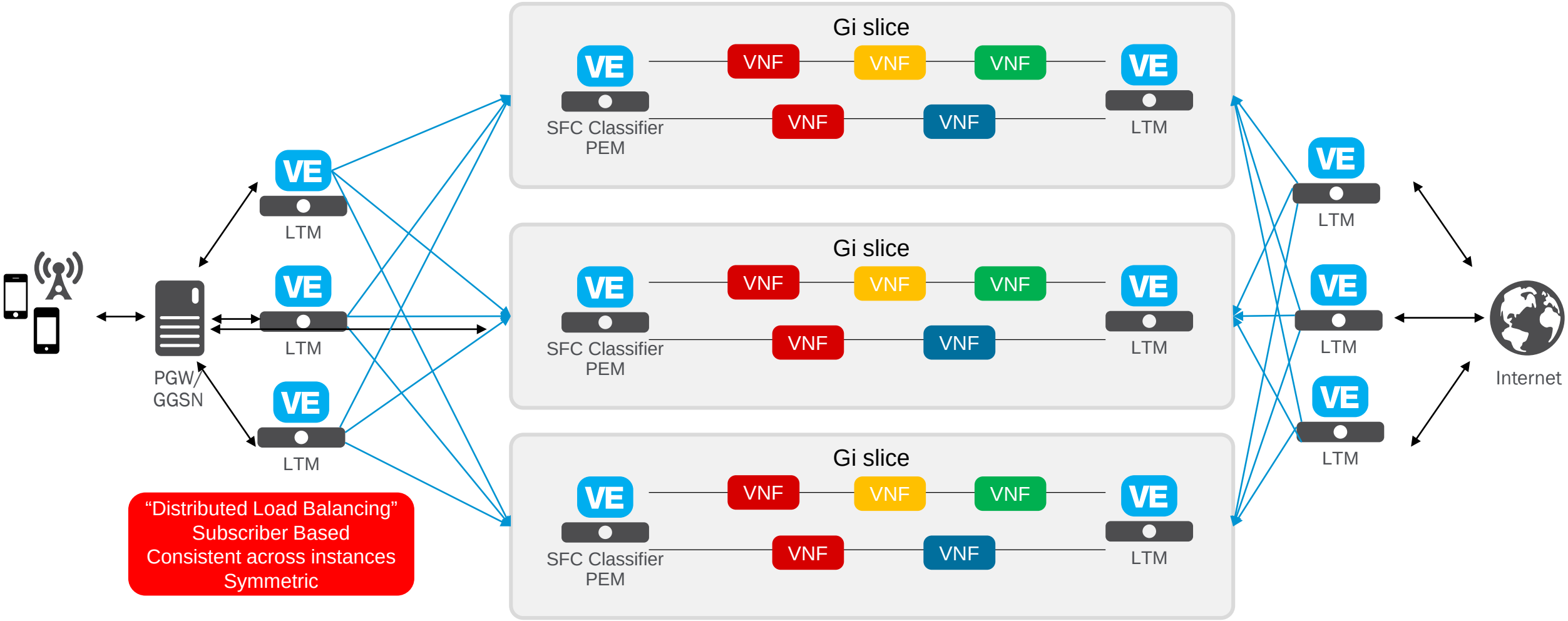

© 2016 F5 Networks

Summary

S/Gi Lan architecture using F5 Technology

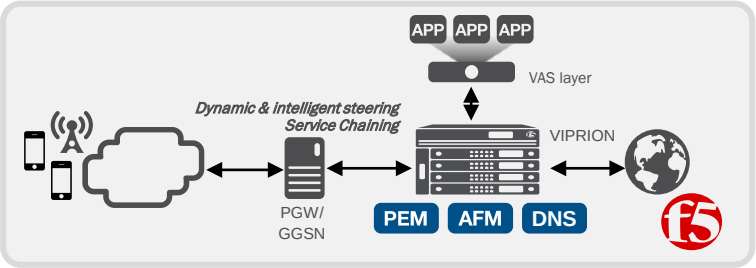

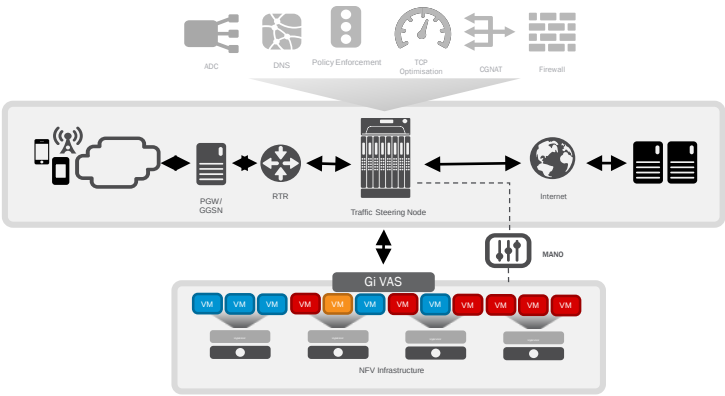

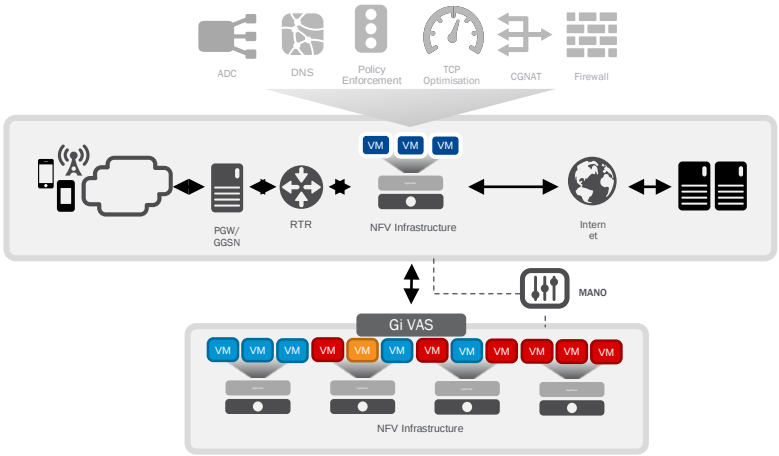

Simplified Network Architecture

Service Consolidation

Technology Consolidation

Less Opex/Capex

Smooth Migration to NFV

Hybrid Architecture

Physical Service Classification

Virtualized VAS

Full NFV Ready Solution

Functional Elements Already Available Today

Scale out and Scale up solutions Available

SOLUTIONS FOR AN APPLICATION WORLD